The MODERN GUNSMITH

HOWE

The MODERN GUNSMITH

HOWE

THE MODERN GUNSMITH

A Guide for the Amateur and Professional Gunsmith in the Design and Construction of Firearms, with Practical Suggestions for All Who Like Guns

By
JAMES VIRGIL HOWE
Formerly in Charge of the Small-Arms Experimental Division at the United States Frankford Arsenal; also Formerly of Griffin & Howe, Inc., of New York City

IN TWO VOLUMES

Revised Edition, With SUPPLEMENT Giving Latest Developments

Volume II

FUNK & WAGNALLS COMPANY
NEW YORK and LONDON

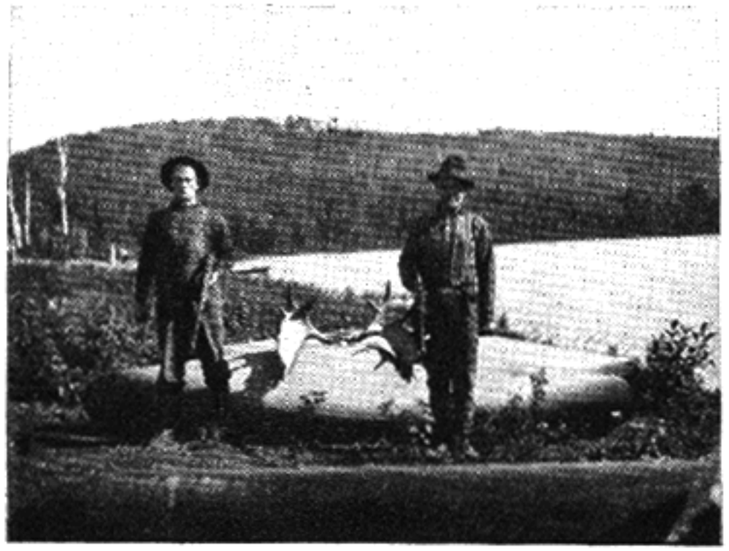

The only choice: the great outdoors, when you own a gun

Upper center: Dr. Richard L. Sutton, his son on the left, taken on their Arctic expedition. Upper right: Mrs. Elmer Keith with trophy and rifle. Lower left: Guides employed on a hunting trip in northern Quebec. Lower center: Mr. E. Keith with large bull elk secured in Idaho. Lower right: Our camp in northern Quebec.

COPYRIGHT, 1934, 1937, AND 1941, BY
FUNK & WAGNALLS COMPANY
[Printed in the United States of America]

18

VOLUME II

Supplement

THE MODERN GUNSMITH

COPYRIGHT 1941

Copyright Under the Articles of the Copyright Convention
of the Pan-American Republics and the United States

CONTENTS — Volume II

CHAPTER PAGE

Introduction 3

I — Machinery, Power, and General Tool Equipment 7

Power for machine tools—The motor drive, etc.—Lathe, drill presses, grinders: cylindrical, surface and internal—Shapers and planers—Bench and speed lathes—The milling machine—Wood-working tools—Selection of machine tools—Screw machine—Inspection of large plants—Starting unfamiliar machines—The lathe as the most important machine—Lathe tools—Tool positions—Grinding machines used in the shop—Selection of grinding wheels—The small-machine wood-working tools.

II — Special Gunshop Tools and Accessories 21

Drawings—The improved checkering cradle—Adjustable tool holder for the grinder—Barrel-cleaning tools—Rifle rod—Shotgun rod—Cleaning tube and funnel—Rifle holder—Rifle machine rest for accuracy tests—Machine rest, design—Screw head polishing fixtures—Telescope holder—Bolt-bending fixtures—Bullet-drilling jig.

III — Tools and Methods of Tool Making 37

Requirements of a tool maker—Becoming familiar with the accurate reading of measurements—The micrometer—Bevel protractor—V-blocks—The cube—Center gauge—Center test bar—Test indicator—Die-maker's square—Knife-edge—Straight-edge—Coppering solution—Tool steels used—Standard tools—Taps—Hardening of tools—Threading dies—Counterbores—Fishtail cutters—Angle cutters—T-slot cutters—Hollow mills—Forming tools—Formed cutters—Fly cutters—Arbors—Barrel plug as a form of arbor—Drill jigs—Laying out work—The surface plate—The precision bench lathe—Gauges—Lapping bench lathe—Knurling tool—The boring tool holder.

IV — Die Making 57

Blanking dies—Progressive dies—Forming dies—Making dies—Die filing—Shear—Sectional dies—Punches—Hardening dies and punches—Tempering—Forming dies—Clip hand-guard—Sight cover—Removable front sight—Setting forming dies—Pressure pads—Cartridge clips—Presses and feeds—Butt plates—Pistol-grip caps—Correcting mistakes in dies—Punch troubles—Stop pins.

V — Whims and Fancies in Firearms 71

The rifle constructed—The double rifle—Carrying yourself afield—The usual range of shots—The choice of a magnum rifle: its weight and stopping power—The wrong rifle and ammunition—Weight and balance—Choosing wisely—Stocks and ammunition—Spending money on a good arm—Sights—Doing the impossible—Practicability in arms.

VI — Principles of Iron and Steel 81

Alloy cast-irons—Alloy steels—Basic pig-iron—Bessemer pig-iron—Bessemer steel—Cast steel—Charcoal—Hearth-cast iron—Converted steel—Crucible steel—Gray pig-iron and gray cast-iron—Malleable castings—Malleable pig-iron—Open-hearth steel—Puddled iron—Puddled steel—Refined cast-iron—Shear steel—Steel castings—Washed metal—Weld iron—Carbon steels—Nickel steels—Nickel-chromium-vanadium steels—Molybdenum steels—Chromium steels—Screw stock—General properties of alloy steels—Crucible or tool steel—Common defects in finished bars of tool steel.

CHAPTER PAGE

VII — Heat-treatment of Steel 89

Heating furnaces—Pyrometers—Thermo-electric pyrometer—Heating steels in liquid baths—Cyanid of pottasium bath—Barium chlorid bath—Annealing steel—Annealing high-speed steel—Hardening—Critical temperatures—Determining hardening temperatures—Kinds of quenching baths—Tank used for quenching—Hardening high-speed steel—Local hardening—Hardening effects—Overhead steel—Scale on hardened steel—Tempering by the color method—Tempering furnaces—Case-hardening—Carbonizing materials—Steel for case hardening—Degree and depth of hardened surface—Case-hardening for colors—To clean work after case-hardening—Case-hardening alloy steels—Different methods of testing hardness.

VIII — Rifle Barrel Design and Fitting 103

An interesting discovery—Design of modern barrels—Target barrels—To reduce weight—Barrel steels—Cold-drawn steel—High-carbon steel—Alloy steel—Stainless steel, nickel steel—Conducted tests—Normalized steel—Hardening or heat-treatments—The use of stainless steel—Standard barrel design—Front-sight ramp—Barrel length—Turning the barrel slightly—The rifling—Bores, groove and diameter—Form of groove—Twist of rifling—Barrel chambers—Fitting ribbed barrels—Bullet diameter—The best results between groove and bullet—Lead bullets—Bullet seat—The rebored barrel—Table of calibers—Bore diameter—Groove diameter and twist of rifling.

IX — Barrel Tools and Their Construction 119

Making barrel tools—Reamers—Reamer flutes—Burnishing reamer—Shotgun boring bit—Chambering reamers—Barrel-chamber sizes—The target barrel with tight chambers—Cutters used for fluting reamers—Barrel drills—Oil tubing for barrel drills and reamers—Rifling heads—The hook-cutter head—The scrape-cutter rifling head—Adjustments—New design of scrape-cutter head gauges for barrel work—Barrel counterboring—Accuracy in making barrel tools.

X — Barrel Drilling and Reaming 145

The barrels made by Harry Pope—Barrel steel—Employment of a lathe for drilling a barrel—The set-up—Connecting oil tube—Angle-plate for fastening oil tube on lathe—Importance of normalizing the steel—Annealed bars from the steel mill—Grinding the barrel drill—Speeds and feeds required—Barrel straightening—Detecting lack of straightness of a barrel—Light reflections in the interior of a barrel—The overhead straightening press—The lead hammer employed for straightening barrels—Reaming barrels—Oil pressure required—Roughing and finishing reamers—Table of drill and reamer sizes for barrel making.

XI — Rifling Barrels 157

Medford rifling—Rigby method of rifling—What rifling is—Spiral or twist in different calibers—Measuring rifle bores—Use of gauges for rifling—Five different methods of rifling a barrel—Use of a milling machine for the rifling operation—Rifling arm used on the milling machine—Set-up for rifling head—Oil tube and connecton—Experimental set-up—Chips cut by the rifling cutter—The rebored barrel—Rifling for larger calibers—Heat-treatment of barrels—Lapping barrels.

XII — Barrel Turning, Chambering, and Headspacing 169

Use of the lathe for chambering a barrel—Cutting the threads—Fitting to receiver—Milling operation on exterior of barrel—Milled sight bases—Employment of barrel vise—Care in clamping—Wrenches—Chambering, threading and fitting old barrel—Use of burnishing reamer—Headspace—Gauging headspace—Changing bolts—Excessive headspace.

CHAPTER PAGE

XIII — The .22 Caliber Hornet — Design and Conversion 179

The single-shot action—Barrel steel—Design of a Hornet barrel—The .22 caliber Springfield barrel—Alterations on action tangs—Bending tangs—Bending forms—Bushing breech blocks—Firing pins—Extractors—"The .22 Caliber Hornet," by Captain G. A. Woody—Accuracy of the cartridge—Making bushings for the breech block—Selection of rifle for modification—Chamber sizes—The chambering reamer—Chambering the .22 caliber Springfield rifle M/1—Alteration on the bolt—Striker—Extractor—Secrets of Hornet accuracy—Stock points of interest to watch.

XIV — Relining of Rifle Barrels 191

Barrels which can be relined—Liner tubes—Boring—How the tubes are rifled—Lapping—Inspection of tubes—How a barrel is prepared—Drilling and reaming—Trimming the liner and interior of the barrel—Inspection after soldering—Final finishing of lined barrels—Chambering—Checking the fire—Possibilities of relining military barrels—Suggestions—Removal of Krag magazine plate.

XV — Striking Barrels and Polishing Gun Parts 197

The terms polishing and buffing—The gunmaker's polishing wheels—The high bright polish—Striking barrels—Tools—Files—Draw-filing—Draw-finishing—Power polishing—Grain numbers of emery—Buffing and polishing composition—Polishing wheels—Problems of polishing—Receivers, guards, and bolts—Polishing shotgun barrels and actions—Polishing small parts—Clamping parts in the vise—Rules for polishing.

XVI — The Art of Bluing and Browning 209

Table of chemicals—Formula No. 1 for quick-method bluing solution—Directions for use—Variations for formulas—For stainless steel—Formula No. 2: Simple quick method or hot-solution process—Formula No. 3: Simple quick method or hot solution process—Formula No. 4: Ten-day rusting process of bluing—Formula No. 5: Rusting process of bluing—Formula No. 6: Rusting process of bluing—Formula No. 7: Rusting process of bluing—Formula No. 8—Also forty other formulas for bluing or browning steel—Receivers—Weight avoirdupois—Weight Troy—Metric measure of weight—Abbreviations.

XVII — Care of Firearms: Cleaning Bores and Removing Obstructions 227

Importance of cleaning the interior of a gun barrel—Neglecting a rifle barrel—The wrong oil or grease—The Frankford Arsenal No. 70 primer—Chromium plating of rifle barrels—Barrel steel—Scouring gun-barrel bores—Treatments—Measuring the bore—Shotgun barrels—Removing obstructions—The cleaning box—Drilling out obstructions—The removal of parted cartridge cases from a chamber—Care and cleaning of firearms—The effect of powder gases—Mechanical treatments of cleaning—Use of powder solvent—Perspiration—Use of an oily cloth—The gun bench—Rifle cleaning patches—Cleaning rods—The gun cabinet.

XVIII — Lapping Barrels and Polishing Shotgun Bores 241

Lapping rifle barrels—The abrasive—Measuring bores—Testing for loose and tight spots—Use of the capping rod—Making the lead lap—Time required to lap a barrel—Practise on worn barrels—Lapping shotgun bores—Turning the laps on a lathe—Sizes of bores—Lapping chokes for patterns—Use of the split lapping rod—Lapping chambers—Care in lapping .22 caliber chambers.

XIX — Special Gun Parts and Their Construction 251

Front-sight ramps: methods of making—Determining heights—Sight gauges—Sight covers—Methods of making sight covers—Front-sight fastenings—Pistol-grip caps—Set-ups for making steel caps—Caps made from various materials—Trap pistol-grip

CHAPTER PAGE

cap—Butt plates—Standard forms of butt plates—Materials employed for butt plates—The steel butt plate—Palm rest—Rear-sight bases—Machine operation—Barrel swivel bases—Barrel bands—Various methods of making barrel bands—Swivel screws and bows—Methods of constructing barrel collars—Telescope mounts—Telescope blocks—Shields and ovals—Gun slings.

XX — Manufacture of Gun Sights 273

Consideration of the human eye when designing new sights—Their construction—Selection—Positions—The target—Aperture sights—Sizes of apertures—Open sights—Front sights—Their construction—Inserting of the gold—Converting a gold bead into an ivory bead by use of white lacquer—Interchangeable front sight—Aperture front sights—Bolt sleeve sights—The Howe-Whelen sight: its manufacture—Sight-setting gauge.

XXI — Spring Making 291

The finest spring steel: source of supply—Forging springs—Bending flat springs—Hardening and tempering—Testing degree of heat with the stick method—Polishing—Springs, helical—Tools to make helical springs—Windage springs—Selection of steel for emergency—Discarded methods of heat-treatment.

XXII — Bullet Swages and Case-resizing Dies 299

Resizing dies: their construction—Reamers: their use—Hardening—Use of the full-length sizing die—Bullet swages—Essential features of good bullet—Tools employed to make swages—Hardening the base for the die—The assembly.

XXIII — Bullet Moulds 307

Cherries used in the past to cut bullet moulds—Shrapnel balls—Ball cherry—Making cherries—Templet—Simple form of cherry bullet moulds—Use of the tools—Reaming the mould—To make the hollow-point lead bullet—Material for casting bullets.

XXIV — Restoration and Preservation of Antique Firearms 319

Arms stored in the attic: a part of their history—To identify the fastenings—Instructions for taking an old arm apart—Rifling the barrel to restore the shooting qualities—The old method of rifling—The broaches used to clean out the bore—Modern method of rifling a muzzle-loading rifle—Reamers—The rerifling operation—Lapping—Locks—Furniture—Replacing missing parts—A formula for varnish—Ramrod pipes—Soldering ribs back in place, etc.—Forearm tips—Nipples—Forming decorative metals—Making wooden ramrods—Refinishing old stocks—Darkening a stock—Antique finish for stocks—Ancient arms—Flints for flint-lock arms—Making black powder.

XXV — Shotgun Repairs 337

Instructions in carefulness—The first rules for stripping an action—Choke-boring for patterns—An explanation of chokes—Boring barrels—Fine boring tools—Polishing the interior—Laps—Loose actions—Fitting a new hinge pin—Grips and bolts—Shotgun barrel work—Cutting off barrels—Lapping in the choke—Trials for patterns—Removal of dents in barrels—Ribs on special barrels—Making ribs—Fitting ribs—The rib brackets—Soldered ribs—Loose forearms—Broken parts and renewals—Adjusting the trigger pull—Cause for broken firing pins—The correct stance in shooting—The use of both eyes in shooting—Table to use for figuring percentage of patterns.

XXVI — The Art of Gun Engraving 359

The term as applied by steel engravers—The tools—Keeping the tool-edges sharp—Forms of gravers—Instruction in the use of gravers—Methods of making etching

CHAPTER PAGE

varnish—Etching in designs—Use of the gravers to cut out designs that have been etched—The demand for highly engraved arms—Animal and bird subjects—Use of gold in engraving—Instructions for the beginner.

XXVII — Appraisal of Craftsmanship **371**

Admirers of side-lock guns—Over-and-under guns—Principle of the locking features—The question of aiming—Offering an opinion—Detachable locks—Placing barrels one above the other—The chamber and the shell—Single triggers—Makers of fine arms in other countries—The perfect gun—The eye as a guide to fine art and craftsmanship—The best gun.

XXVIII—Review of Military Small Arms **381**

XXIX — Glossary of Chemicals and Substances **411**

A dictionary of chemicals and terms used in gun work.

Index **417**

Supplement ..... *Following* **424**

ILLUSTRATIONS — Volume II

FIGURE		PAGE
	The only choice, the great outdoors, when you own a gun	*Frontispiece*
1.	Hendy screw-cutting engine lathe	8
2.	Pratt & Whitney equipment: Bench lathe, bench miller, and drill press	9
3.	Engine lathes in operation in the tool room	11
4.	Gould & Eberhardt shaper in operation	13
5.	A Cincinnati milling machine in operation	14
6.	Surface grinder in operation	15
7.	Pratt & Whitney bench lathe: Internal grinding attachment in operation	16
8.	Steel checkering cradle and bench	22
9.	Improved adjustable bench tool grinder	24
10.	Barrel cleaning accessories	25
11.	Improved rifle holder for testing purposes	26
12.	A model testing house with shooting bench made so that the user can fire from either right or left side	27
13.	Improved machine rest design for accuracy trials	29
14.	Disc polishing holder for flat screw heads	30
15.	Whelen spotting telescope holder	31
16.	Bending fixture for bolts	32
17.	Drilling fixture and drilling jig to drill points of bullets in fixed ammunition	33
18.	Micrometer ball points, lapping fixtures for spindle, and anvil of same	38
19.	V-Blocks and clamp	38
20.	Cube—an essential tool for laying-out work and making tools for the gun shop	39
21.	Thread center gauge: an essential tool for cutting accurate screw threads	40
22.	Center test gauge: used to true work on a lathe	40
23.	Knife-edge straight-edges used to check flat surfaces	41
24.	Drill and countersink combined	45
25.	Special milling-machine cutters, and hollow mill	46
26.	Two- and four-fluted end mills	46
27.	Hollow mill with clamp	47
28.	Lathe mandrel	48
29.	Suggested design for surface plate	50
30.	Bench lathe knurling tool	52
31.	Boring tool holder	53
32.	Sine bar: Used to determine angles and to lay out angles on work for machine operation	53
33.	Illustrating shear on die and punches	59
34.	Springfield hand-guard clip	63
35.	Springfield front-sight guard or cover	63
36.	Springfield removable front sight	64
37.	Cartridge-clip blank development for the caliber .30 Model 1906 cartridge	65
38.	Model 52 Winchester, caliber .22 rifle, remodeled. An ideal arm for the woods	71
39.	Caliber .30 Model 1903 Springfield, remodeled. An ideal arm for the North American Continent, designed for Mr. William Palmer, Jr.	73
40.	Gun cabinet designed by Mr. Lee D. Elliott. Entirely constructed of oak. Note the two electric lights above the rifles and shotguns	74
41.	A Parker Brothers shotgun	75
42.	Special 12-gauge Greener trap gun made on a heavy Martini action	75
43.	Zeiss telescope and Niedner mount. Lyman aperture sight mounted on cocking piece, an ideal combination when two sights are desired	76
44.	Three-barrel gun of German make	77
45.	Springfield Model 1903 rifle designed for Mrs. Charles G. King. Eighteen-inch barrel, "Mannlicher type." An arm well adapted to the saddle scabbard	78
46.	Springfield floor plate. Moose and bear in gold. High relief engraving	78
47.	Color ranges and tempering treatments in Fahrenheit and Centigrade thermometer standards	96
48.	Standard rifle-barrel design	107

FIGURE PAGE
49. Rifle-barrel designs—Ribbed and three-quarter ribbed ... 108
50. Barrel design. Size to govern weight ... 109
51. Barrel turning arbors ... 111
52. Rifling. Note small radius on driving side of the lands ... 113
53. Reamers. Flutes commonly used, and offsetting of flutes for milling set-up ... 120
54. Improved designs for gun-barrel reamers ... 121
55. Shotgun boring tools—commonly called boring bits in the gun shop ... 122
56. Standard chambering reamers used in manufacturing caliber .30 Model 1903 Springfield rifle barrels 124
57. Chamber sizes for the construction of chambering reamers ... 125
58. Chamber sizes for making chambering reamers ... 126
59. Chamber sizes for making chambering reamers. Finishing reamers are made to these figures ... 127
60. Caliber .30 Model 1903 rifle chamber and caliber .30 Model 1906 cartridge. Maximum dimensions for manufacture of case ... 128
61. Typical barrel drill and connections ... 129
62. Tool and fixture used to form chip clearance in oil tubes. A planer is used for the operation ... 130
63. Gun barrel accessories, such as barrel drill holder, taper grinding gauge, and barrel counterbores ... 131
64. Jig for brazing barrel drill to oil tube ... 132
65. Caliber .22 hook-cutter rifling head ... 133
66. Caliber .30 hook-cutter rifling head ... 134
67. Caliber .30 scrape-cutter rifling head ... 135
68. Rifling-head oil-tube connection and mandrel for grinding rifling cutter ... 136
69. Design suggestion for six-groove caliber .22 scrape-cutter rifling head ... 138
70. Design suggestion for six-groove caliber .30 scrape-cutter rifling head for cleaning out rifling ... 138
71. Headspace gauges and master for rimless cartridges ... 140
72. Rifle-chamber gauges for inspection purposes. Standard for caliber .30 Model 1903 rifle ... 141
73. Rifling gauges ... 142
74. Headspace measurements. Rimmed cartridge case shown in chamber ... 142
75. Rifle-barrel drilling machine in operation ... 146
76. Lathe head and chucks. Oil-tube holder, which is clamped in cross slide. Barrel blank and table of barrel-blank turned measurements ... 147
77. Barrel-drill end, showing the cutting edge, oil hole, and chip groove ... 148
78. Barrel-straightening fixture and illustration of light effect ... 149
79. Standard method of straightening rifle barrels in the Remington Arms plant and other arms-manufacturing plants ... 151
80. Gun-barrel tools: (1) Barrel drill welded to oil tube. (2) Scrape cutter rifling head. (3) Hook cutter rifling head. (4) Standard barrel reamer sweated to oil tube ... 159
81. Stages in the manufacture of a rifle barrel: blank, rough-turned and finished ... 159
82. Rifling-head fixture ... 160
83. Side views of scrape and hook cutters in two standard rifling heads used at the Springfield Armory ... 162
84. Spear or three-lip barrel drill. Barrel broach ... 163
85. Barrel lapping rod holder and rods for producing high finishes required in rifled gun barrels ... 165
86. Showing how rifle barrels are lapped in the large arm plants ... 166
87. Barrel vise for removing and screwing barrels in action ... 171
88. Caliber .30 Model 1898 rifle chamber and caliber .30 Model 1898 cartridge ... 174
89. Top: Caliber .22 "Hornet" barrel on Farquahrson action made by Westley Richards. Bottom: Special barrel made on single-shot Winchester action for "Hornet" cartridge ... 180
90. Caliber .22 "Hornet" chambering reamers, etc. ... 187
91. Caliber .22 "Hornet" maximum case measurements ... 187
92. (a) Magazine removed from a Krag rifle: hinged cover in the opened position. (b) Closed position, showing the flush outlines along the action ... 194
93. Rifle and shotgun barrel holder ... 198
94. Wooden holder for emery cloth when draw-polishing gun barrels ... 199
95. Polishing surface of barrel to remove tool marks as done in the large arm plants ... 202
96. Lapping-rod tips used for polishing shotgun-barrel interiors ... 246
97. Designs for front-sight ramps and covers ... 252
98. Sight-alining gauges, front and rear ... 253
99. Plunger positions for holding sights and other movable parts ... 255
100. Springfield bolt sleeve, showing ball bearing and spring in position ... 255
101. Layout for specially designed pistol-grip caps ... 256
102. Profiling of parts as performed in the Remington Arms plant ... 257
103. Trap pistol-grip cap ... 258

FIGURE PAGE
104. Leaf-sight bases ... 261
105. Sling swivels, swivel bases, and die for forming swivel bows ... 262
106. Barrel-band tools ... 264
107. Barrel bands for quick-release swivels ... 264
108. Method of making a simple barrel band for any sporting rifle ... 265
109. Barrel collars used in front of receiver and to hold wooden guards in position ... 267
110. Niedner sporting telescope mount ... 267
111. Remodeled Springfield Model 1903 designed for Mr. Earl Benninghoff. Full sighting equipment ... 268
112. Telescope bases for mounting on target rifles ... 269
113. Die stamping of a Whelen gun-sling hook ... 270
114. The Carney gun sling—the sling that meets the needs of the target shooter or hunter ... 270
115. Leaf-sight designs ... 274
116. Front and rear sights. Methods of holding on target or object ... 276
117. Design suggestions for targets ... 277
118. Improved design of aperture front sight ... 281
119. Howe-Whelen aperture sight in position on rifle ... 282
120. Assembled view of Howe-Whelen aperture sight ... 283
121. Detailed parts of Howe-Whelen aperture sight ... 284
122. Detailed parts of Howe-Whelen aperture sight ... 285
123. Remodeled Springfield Model 1903 designed for Dr. A. J. Ries. Howe-Whelen sight attached ... 287
124. Spring winding tools ... 294
125. Swedging die. Reamers used for making die ... 301
126. Bullet swedging die ... 301
127. Bullet-mould cherries. Mould counterbore and form tool for cherry ... 308
128. Shrapnel ball dies. Form of die used to make the lead balls encased in shrapnel shells ... 309
129. Lead bullet mould ... 312
130. The Pauly percussion breech-loading gun, made in 1811 ... 319
131. Flint-lock double gun by Joseph Manton & Son ... 320
132. Joseph Manton percussion-lock double gun ... 321
133. Flint-lock double gun made by Tow, of London ... 322
134. Rifling-head design for making muzzle-loading barrels ... 323
135. An early-period percussion-lock rifle ... 323
136. Side-hammer double gun made by A. Wurffelin ... 324
137. A fine example of a Westley Richards percussion-lock double gun ... 325
138. Flint-lock gun made by H. Nock ... 326
139. Early example of Joseph Manton's percussion-lock double gun ... 327
140. An early example of William Moore's percussion-lock double gun ... 328
141. The silversmith's art applied to the ramrod thimble of a better-grade muzzle-loader ... 329
142. Flint-lock double gun made by H. Nock ... 332
143. Flint-lock double gun made by E. Baker ... 333
144. Flint-lock double gun made by Twigg ... 334
145. Barrel chokes and shotgun chambers ... 340
146. Methods for making insertions in worn part of shotgun lumps ... 344
147. Lyman front and rear ivory shotgun sights ... 345
148. Shotgun dent raisers ... 347
149. Designs for ribbed barrels ... 350
150. Shotgun rib extension used on single-barrel trap guns ... 351
151. Snap caps: used when trigger-pulls are tested ... 352
152. Sunrise: and soon the ducks overhead ... 355
153. The steel engraver's tools ... 360
154. Only the finest engraving is appropriate for the better arms ... 361
155. Mauser magazines and floor plates. Animal heads in high relief work ... 362
156. Design suggestions for etching or engraving on butt plates, floor plates, and pistol-grip caps ... 363
157. Colt caliber .45 automatic pistol. Figures in gold and platinum inlay. High relief work ... 365
158. Initials for monograms, engraving, etching, etc. ... 366
159. Springfield magazines and floor plates. Animals in gold. High relief work ... 367
160. Model 39 Marlin rifle, caliber .22. Engraved with snake and bear in gold. High relief work ... 367
161. Westley Richards "Ovundo" gun. The shotgun ... 372
162. Westley Richards "Ovundo" gun. The rifle ... 372
163. Westley Richards "Ovundo" locking features ... 373
164. Westley Richards hinged cover plate ... 374

FIGURE PAGE
165. Westley Richards detachable lock 374
166. Westley Richards single-trigger mechanism 375
167. Parker Brothers single-trigger mechanism 375
168. Parker Brothers best shotgun 376
169. Another Parker Brothers best shotgun 377
170. Westley Richards best shotgun 377
171. A better example of Westley Richards best shotgun 378
172. There is some strange mellowing influence that prevails alike upon all men and women who shoot 378
173. Mauser rifle, Model 1898 (Germany) 382
174. Springfield, Model 1903 rifle (United States) 385
175. Mannlicher-Carcano rifle (Italy) 386
176. Mannlicher, turning bolt action (Holland) 388
177. Lebel, Model 1886 (France) 392
178. Krag-Jorgensen rifle (Norway) 394
179. Nagant rifle (Russia) 396
180. Mannlicher, straight-pull action (Austria) 397
181. Schmidt-Rubin rifle (Switzerland) 399
182. Ross rifle (Canada) 401
183. Short, magazine, Lee-Enfield Mark III (England) 403

INTRODUCTION

Mainly for the Advanced Student

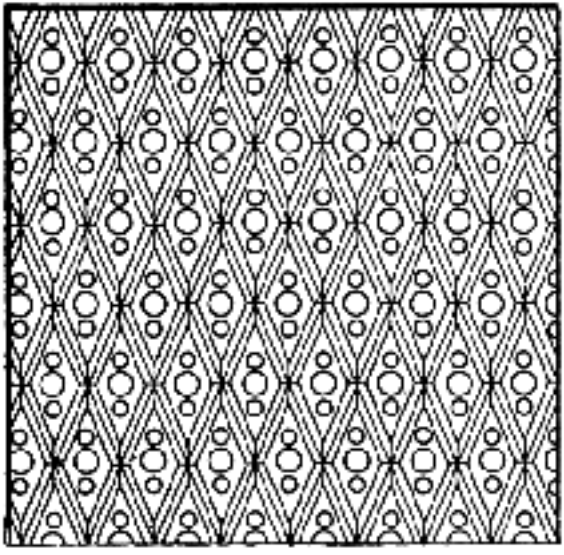

The Modern Gunsmith

INTRODUCTION

Mainly for the Advanced Student

MOST men, I think, build air-castles to which they can retire in moments when the monotony of life becomes oppressive. Most, also, are just a little diffident in acknowledging these excursions into the realms of fancy, not realizing perhaps that here there is born the best that comes to a man's life. The desire to be and to do takes form, which eventually, in most instances, will lead to substance.

To be able to follow one into this magic realm and unostentatiously become a companion in the dream takes a sympathetic nature and a love of one's fellow men; but think of the life-long friendship it has made and how the little help and encouragement given has led to results never dreamed of or anticipated. Here is where "can't" is abolished and laughed at, and "I can and will" are born.

So, in writing the second volume of this work on gunsmithing, my mind goes forth into the ethereal and I see many aspiring, still in secret, to achieve the things that hitherto have seemed impossible in this science; it is to them that I address myself. In all seriousness, I say to them that what I preach they can practise; that what I teach they can learn; that what has been done they can do.

The fact that Harry Pope was able to produce his matchless barrels with no other machine than an old lathe, that he could fashion makeshift barrels with a makeshift contrivance would excite no wonder, but that he could and did make barrels superior to those produced by machines designed and built for this particular purpose is a tribute to his patience and ingenuity, and should dispose of the word "can't" forever.

Following the lead of the great mechanic, I have outlined a better set-up, using a milling machine instead of a lathe. Many will doubt the possibility of such a feat, but I assure them it can be done and the work so produced will be equal in quality to that produced on a standard rifling machine—a machine quite out of the question in the ordinary gunsmith's equipment.

The general use of machines in our age has made us mechanical-minded. We do not think any more of getting results from things beyond us. We are not only willing but eager to be shown our capabilities. This is where the word "can't" comes in again. Let us in this book put brains above every other consideration and make ingenuity and stick-to-it-iveness the great aiders and abettors. Let us show the world that our forefathers who did wonderful things with their fingers and the tools at their command still have in us their worthy successors.

Those of my readers who live in the larger towns and cities have opportunities never available in the world before. High schools are often equipped with standard machine tools, and instruction in their use is made a part of the curriculum. Even those beyond high-school age have a place in the night sessions which every winter brings. This is a great advantage, but it must not be thought an exclusive one. A canvass of the greatest inventions reveals that the attic was ever the rival of the laboratory and the wood-shed the rival of the machine shop.

I do not say, attempt the impossible. It would be folly to make, at a tremendous expense of labor, a part that a machine makes better and at trifling cost; but I do want to retain for the student the joy of creating—the satisfaction of having "done it himself."

How many air-castles have had little machine shops tucked away among their turrets? I venture to say that they are innumerable. And how much easier they are to obtain in the workaday world since power can be brought in on a wire! Such a shop is the dream of the experimenter, the technician, lawyer, doctor, padre, banker, or tired business man. Here is a little realm where he is the god, where he can create, express himself, and do as he pleases. Such a place of retirement is the most wholesome, sanitary, and restful place discoverable. Too long have we sought inertly to

be amused. Let us try amusing ourselves for a change. Let *us* be the actors in our little life's drama. It doesn't make any difference what we do. Tinkering, just tinkering, is one of the most desirable ways of spending leisure that I know of. And these hobbies—do you ever stop to realize their value in the scheme of things? To have no hobby means that work and care are slowly stealing from you every ounce of unrecoverable energy. Men without hobbies never retire from business—they have no place to retire to.

Readers of outdoor magazines are constantly being treated with articles pertaining to firearms. Some of these are of great merit, being contributed by writers of knowledge and experience. Naturally, because of the limitations of such articles, they are fragmentary and incomplete. I have purposely tried, in this book, to augment such instructions, to complete the information. A large demand has forced me to include a chapter on heat-treating. This important subject is still a new thing to most mechanics, amateur or professional. It was not realized until recent years, how susceptible metal was to structural change through temperature; how lost and destroyed qualities might be restored, fatigue checked, and elasticity preserved; how the stresses lost in manipulation could be released, and varying qualities distributed over a piece of metal. This, I am sure, will be an interesting and informative chapter. There are also two chapters which at first might seem unessential in a book of this nature; but I assure you that chapters on tool making and die making are as important in the production of firearms as any other chapter in the arrangement of information.

You may now turn to the book itself. It has been written in the spare moments of many busy working days. It must not be considered a literary effort. To classify it thus would only add to my discomfiture. It has been a labor of love, accomplished with the fond hope that it may add to the knowledge of the amateur and suggest to the professional other ways of doing things that perchance are improvements on his own. It will also take its place, I trust, as a work of reference—a storehouse to supplement one's memory.

CHAPTER I

Machinery, Power, and General Tool Equipment

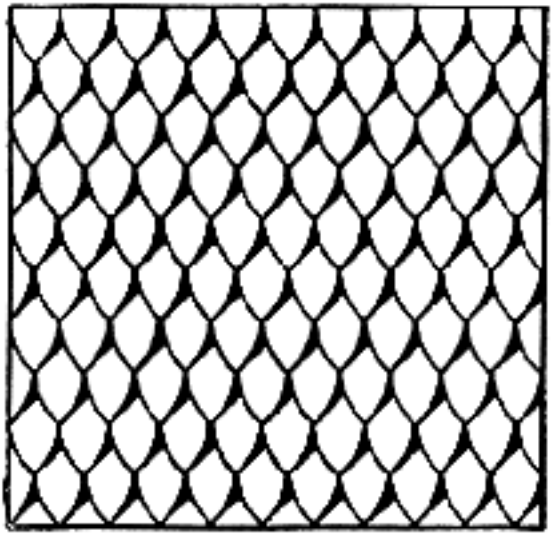

CHAPTER I

Machinery, Power, and General Tool Equipment

THE selection of machine tools for any gun shop depends to a great extent upon the class of work anticipated. If one is dexterous he should only select the machine tools which will profit him in their investment and then add the ones which will make the establishment more complete. A gun shop is a highly specialized tool room or machine shop, and machine shops are to be found in nearly every city, town, village, and hamlet throughout all civilized countries over the globe. There are few products used by humanity which do not depend in some way upon the machinist and the tool room for their production. The shrewd and calculating gunsmith or machinist can always render service in other lines of work during slack times with the equipment at his disposal, and if he has an inventive mind originate some useful article needed by humanity.

Any young man who intends to become a gunsmith, machinist, tool maker, or die maker, should take advantage of every opportunity to become independent of the industrial plants and strive for his own shop. There are really more opportunities for independence here than in a great many other lines of work. In fact a survey of industrial establishments will show that the majority of owners have risen from among those who started at the bottom.

Power for Machine Tools — The motive power required to drive machine tools is either electricity, gas, oil, steam, or gasoline. Because of our rapid advancement, electric power is the universal standard, and very few isolated districts in the world are without electrical power of some description. Gun establishments are usually located in or near cities, so electrical connections are always available; therefore I shall presume that the reader is contemplating using this means of power transmission to drive the various machine tools recommended throughout this chapter.

The individual motor drive with a separate motor attached to each machine makes an installation expensive, and altho this form of drive is the most flexible, it is frequently replaced with the group drive for light gun-shop work. In the group drive the motor drives a short length of line shafting from which, in turn, the machine tools are driven. The best arrangement for a group drive is to divide the gun shop into small units for wood working, barrel making, the tool room and the machine shop, and have a motor for each unit or department. The line shafting should be as short as possible and the motors placed in accessible position. A small platform makes an excellent mounting for a motor. Motors suspended from the ceiling do not, as a rule, receive the careful attention they need, and it is difficult to replace them when mounted thus.

The horse power of the motor required for group driving in the gun shop is much less than the sum of the horse power required for each individual machine. The reason for this is that some of the machines are idle and others consume only a small amount of power at a time when the remaining machines absorb the maximum amount. Actual experience has shown that for group driving in any ordinary gun shop a motor of between three and five horse power is sufficient.

Lathe — Various ways of driving an engine lathe by motors are in use. Some makers furnish motor-driven lathes as standard equipment; some have a headstock with a limited number of speeds and depend upon a variable-speed motor to fill out the speeds of the lathe. Others apply a constant-speed motor or one with a limited amount of variation to an all-geared headstock. General practise, the use of which this class of machine is a part in the shop, would naturally lead to a group drive. There is no material advantage, in my opinion, in the individual motor drive if the lathe is just used for the regular run of operations.

Drill Presses — The only reason why the sensitive drill press should have an individual motor drive is that it is used more than any other machine in the shop, not on long and constant application as in a manufacturing plant, but for a variety of special jobs which require only a few minutes of time. Most sensitive drill presses have in themselves all the speeds required for the work intended, so that any type of motor will be adaptable. The motor may either be directly applied to

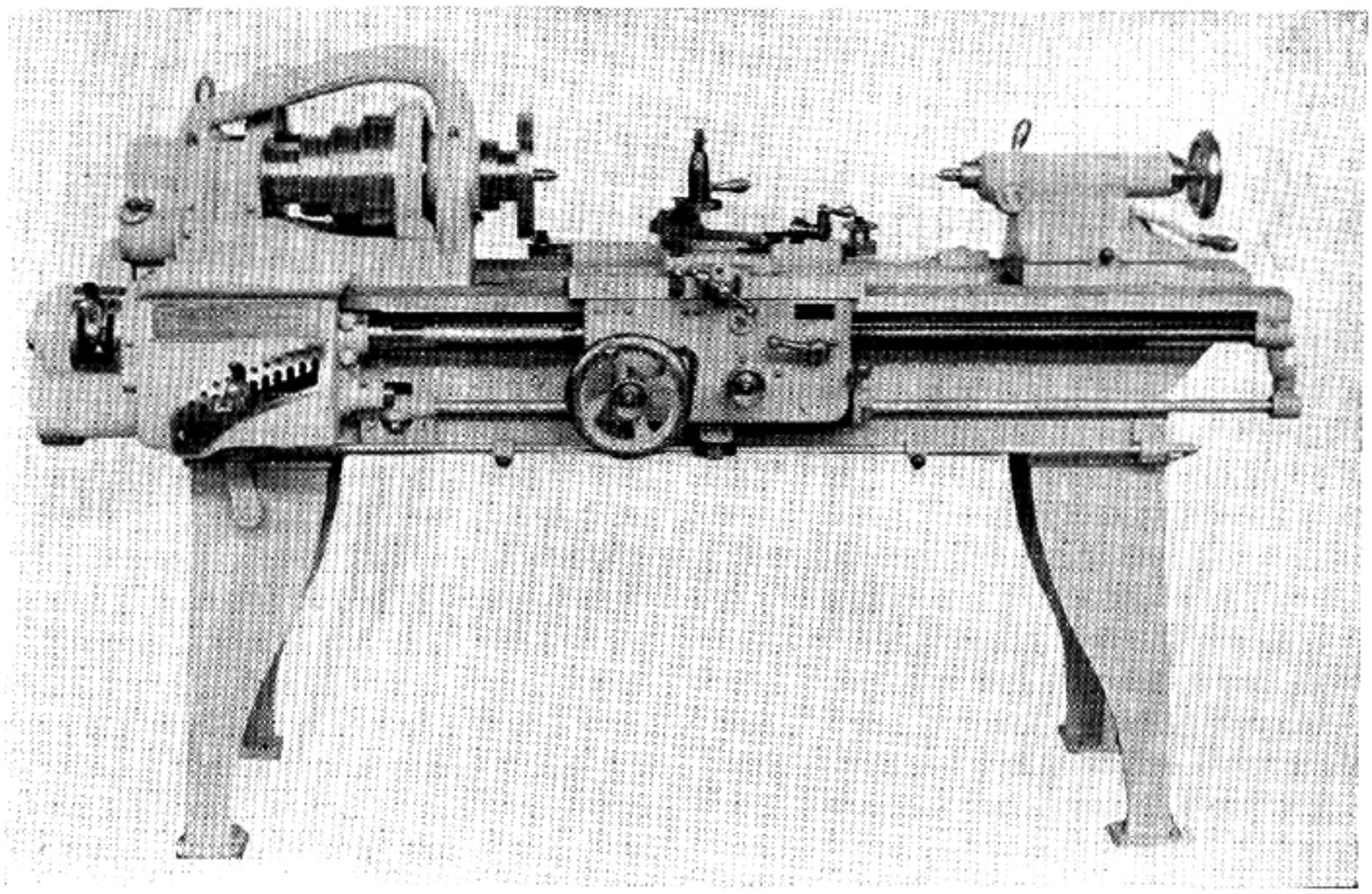

Fig. 1
Hendey screw-cutting engine lathe. Such a machine is essential in the gun shop

the machine or may drive a countershaft on a stand, or it may be placed on the floor by the side of the machine in case the press carries its own set of cones or other variable-speed devices.

Small shop owners often prefer a small upright drill press for work of a manufacturing nature or for drilling and reaming operations on sight ramps, barrel bands, swivel bases, etc. Such machines do not require frequent changes of speed. There are, however, many exceptions; for instance, where an upright drill press is used for all the operations on a piece of work by means of a jig. In this case frequent changes of tools, and therefore of speed, are required, and an individual motor drive, whether directly connected to the machine or operating on a countershaft, is of great value. No special benefit is derived from a constant-speed motor with this type of machine.

Grinders: Cylindrical, Surface, and Internal — Grinders in general require so many various movements driven from countershafts that it is hardly possible to apply a single motor directly to the machine. The best that can be done is to attach the countershaft to the machine and drive the former from a motor standing on the floor or on a bracket attached to the machine. In isolated cases it would be well to have one or more motors, each controlling a single operation attached to the machine. The average gun shop making all its own tools requires a plain cylindrical grinder for reamers, counterbores, rifling heads, etc. It is therefore advantageous to select one of the universal type so that all angles can be ground on any reamer. When a great amount of production work is encountered, a tool grinder is an additional advantage and every large shop should be equipped with one for the grinding of milling cutters, special tools, etc., where the average grinder cannot be used. A large cylindrical grinder is often employed to grind plain rifle barrels to reduce the cost of labor in finishing.

Very little use will be found for an internal grinder in gun work except when used in the tool room, and then much of this work can be done on the bench lathe with the internal grinding attachments that are mere accessories for light machines, and used for grinding holes in hardened work. Now there are constructed rigid, massive, compact machines having instantaneous changes of speed and feed, and designed for rapid production of round holes, both straight and tapered. The plain surface grinder offers wonderful possibilities in the gun shop. These machines have been used in the tool room for years and may be used for finishing straight parts on rifle accessories in place of the file, emery cloth, and the buffing wheel. It is better in many instances to utilize the advantages offered by surface grinding. The application of a motor to an older machine does not pay, but in most of the newer types of machines motors are housed in such a manner that they are not seen

and a motor applied is more efficient than an overhead countershaft.

Shapers and Planers — Planers in general do not require the application of a motor, particularly in the gun shop, for these are only used at times for roughing out surplus material from gun barrels, forming oil grooves in oil tubing, and machine-chasing shotgun ribs; also for making various fixtures and for repair work about the shop. In regular production work, however, motor-driven planers give better results because of the facility of handling the work. Another possible advantage when using a variable speed motor and controlling the speed of the motor at the end of the stroke is that much higher return speeds can be obtained with any desired cutting speed. Local conditions may make it advisable to drive individually by motor, but in my opinion this is not advantageous.

Shapers should either have motor connections or friction clutches. The highest type in this class is the all-motor-driven machine with the control handle placed in such a position that it is at the operator's hand, which is also true of the friction-clutch-driven machine. This type is driven directly from the main-line shaft, which eliminates a countershaft. These machines are of the variable-speed type and are changed by a gear shift. Generally speaking, there is little reason why a shaper should be motor-driven when provided with the friction clutch. A few types handling large work may be motor-driven for convenience, but these are not used for gun-shop work.

Bench and Speed Lathes — Bench lathes should be driven from a countershaft attached to the wall or bench and driven in turn by a motor. Any kind is acceptable; one with a variable speed will be very satisfactory, particularly if it be of the precision type with all attachments for different speeds. The object of the motor drive is to have the lathe in the best possible location without regard to the location of the line-shafting. A bench miller may also be installed on one end of the bench that the lathe is on, and thus the two machines be driven from the same motor.

Speed lathes should be driven from a countershaft located under the lathe, or by a directly-connected motor. In the latter instance, a variable-speed motor is preferable, provided direct cur-

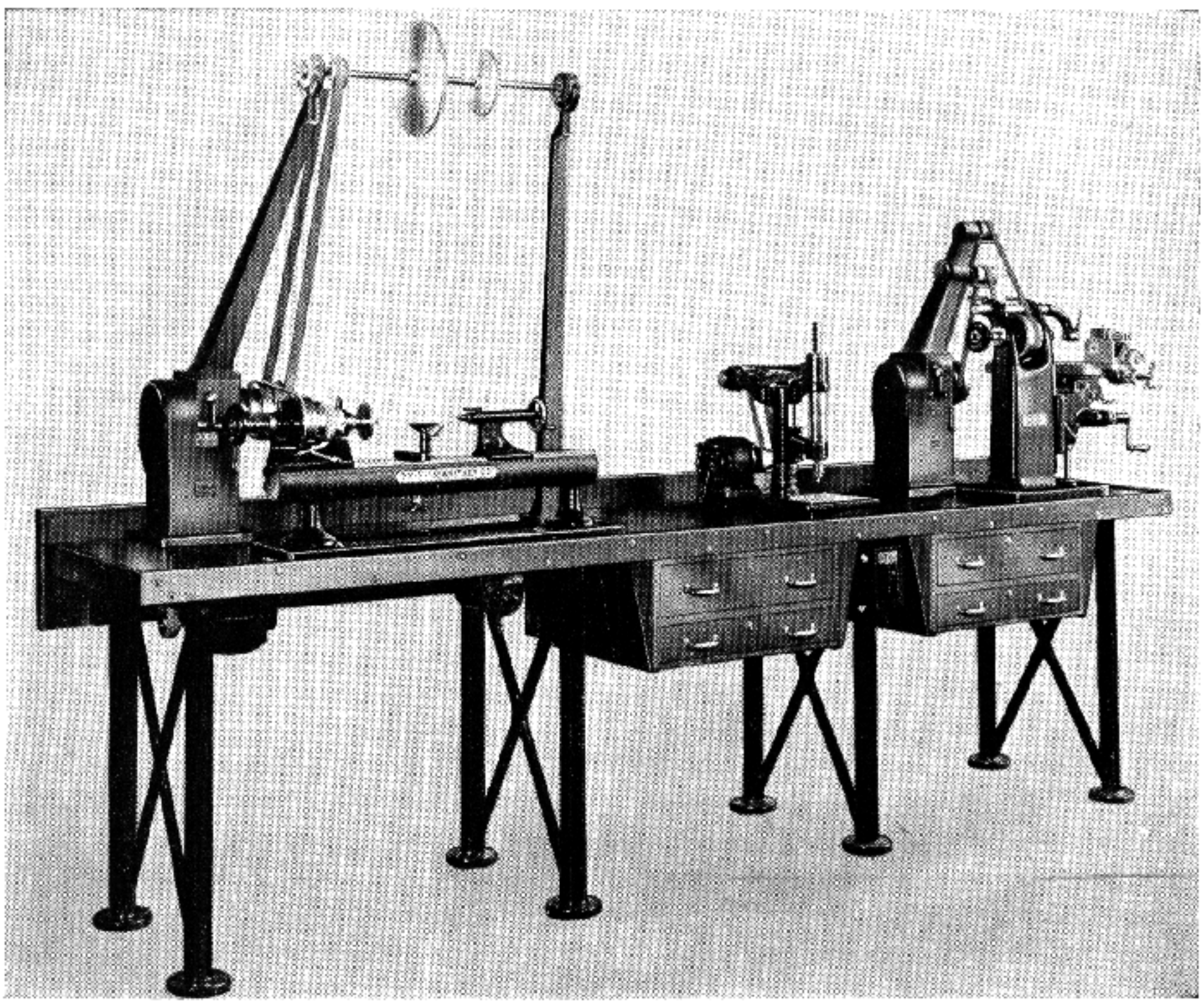

Fig. 2
Pratt & Whitney equipment. Bench lathe, bench miller, and drill press. All electrically driven and made as one unit on a well constructed bench

rent is available. Motor drive is recommended when the machine is used for polishing and filing parts such as screws, pins, etc., as the machine may then be placed where it is most needed, or close to the assembling benches.

Milling Machine — The instructions given for shapers also apply to milling machines, as the arrangement of motor and friction clutch are identical in the two machines. The milling machine is called upon to do such a large variety of work in the gun shop that a study of the different types should be made and the best selected for the work to be done. It is therefore important that the speed should be as close to the permissible limit as possible. When applied to any type of milling machine, the motor should be as low as possible, for vibrations in the machine have a marked effect on the quality of the finish.

Wood-working Tools — Since nearly all wood-working tools are constructed in separate units it pays at times to drive them from a line shaft, provided there is work enough in the shop to keep them continually employed; otherwise, the individual motor drive proves the most economical from the standpoint of efficiency. When most of the stock work is done by hand, only machines of light construction are necessary and these provided with separate motors.

Selection of Machine Tools — Only a brief outline can be given on this subject, for a vast amount of information is required to make a complete treatise, so I must assume that the reader will avail himself of valuable suggestions in the form of reliable books or that he has the necessary training in mechanics enabling him to take counsel with himself and choose the tools best suited to his individual needs, whether in rifle work or other lines of manufacturing.

This chapter is intended for those men who are preparing themselves for the beginning of an all-around knowledge of the gunmaker's experimental stages of mechanics and also for those who may not have had an opportunity to learn. It may give that keynote for the development of talent which has long lain dormant. Some may express their wish to learn a trade, tho they have found their start or even their life's work in one of the special divisions of the metal working industry which have grown out of modern ideas of mass production.

Screw Machine — Early in the development of the machine-shop industry, in the United States as well as in European countries, it became evident to alert and progressive mechanics that an unnecessary amount of labor was involved in continually changing the cutting tools during repetition or production work on various kinds of lathes. This led to the adoption of devices to avoid the loss of so much time and effort through makeshift contrivances. Then came the development of an idea —the turret lathe principle and the screw machine. Today these may be divided into two general classes; namely, bar-stock machine and chucking machine. The former, commonly termed "hand-screw" and "automatic machine," is used for manufacturing screws, and also for machining any part that can be turned from bar stock or from castings or forgings having a cross-section similar to bar stock. The chucking machine, as its name implies, is used for machining work held in chuck jaws or special holding fixtures, and usually on forgings, castings, or cut stock too large to be a bar-stock product. Machines of the latter class are not used in rifle work, but the former is common in large manufacturing plants.

An inspection of some of the large arms plants will reveal many types of these machines, among them those having a headstock very similar to that of the lathe, and a tool-carrying turret which is designed to swing the cutting tools into position for each successive operation and which may be fed to the work by hand or power, but carries no cross-feed mechanism as a part of the machine. In the large arms plants most of the machines are of the automatic type, but for the small gun shop a hand-screw machine is often an added advantage, particularly for the manufacture of rifle accessories. It is economical to select such a machine as a manufacturing tool, for one piece of work can be finished in less time there than in a lathe; and with two or more pieces making up the part, still greater savings can be made. At times elaborate set-ups pay because the cost in time and money is carried over a large number of pieces and the cost per piece becomes exceedingly small.

I think it well to mention the starting of an unfamiliar machine tool in this part of the chapter. Such advice is ancient history to the experienced mechanic, but to the young man who has not operated all types of machine tools, an advance reminder often saves considerable expense and time. When purchasing or running a machine with which you are unfamiliar, the various controls should be demonstrated by some one who understands them. If this cannot be done, study an operator's handbook such as is furnished by practically every manufacturer of special machinery. These books carry diagrams, descriptions, and cautions regarding particular types of machine. In case neither of these

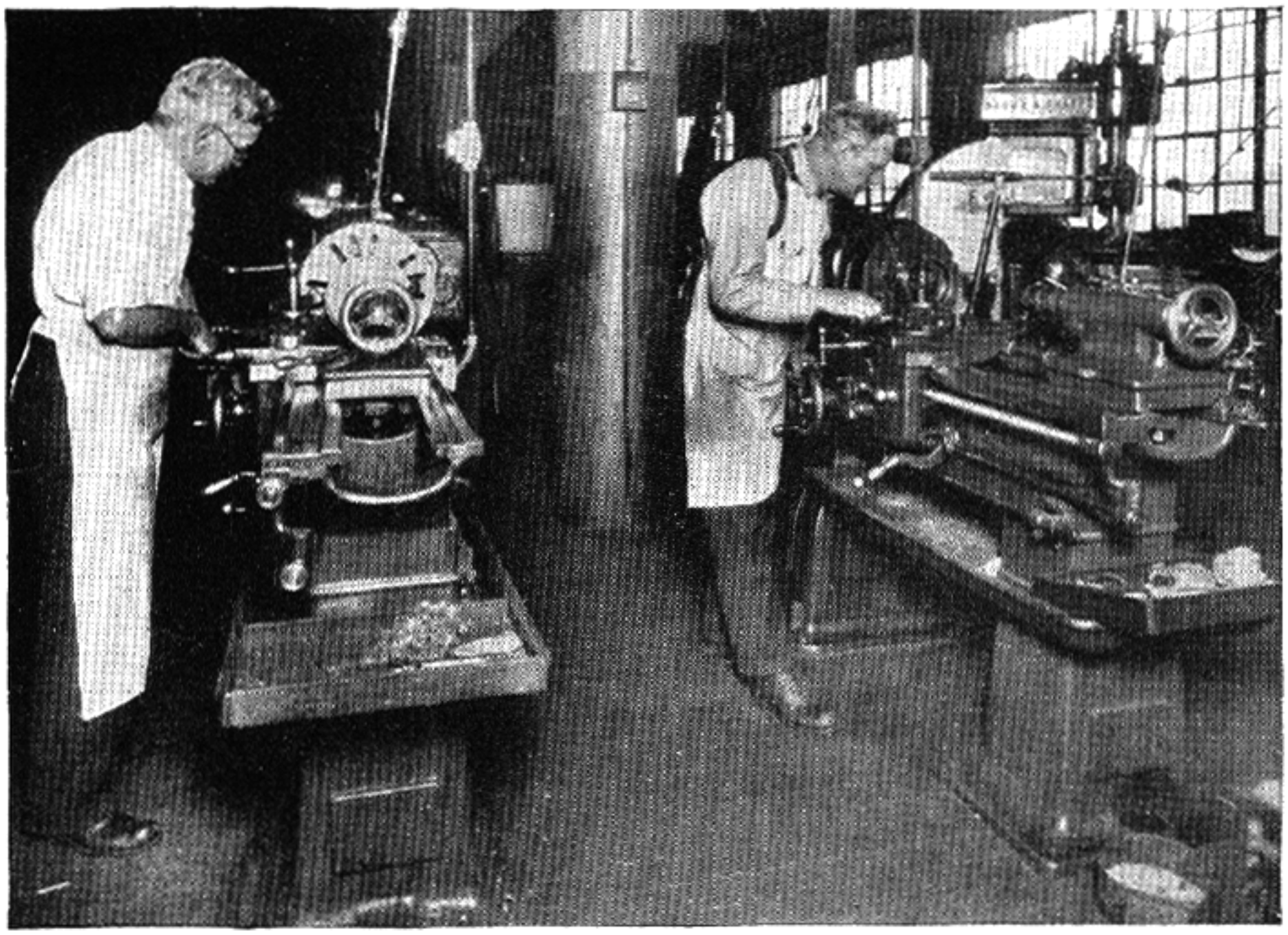

Fig. 3
Engine lathes in operation in the tool room

things can be done, throw off the power, turn the machine over by hand by turning the drive pulley, gear, or sprocket, and try out the various levers, hand wheels, and handles singly and in combinations until you are satisfied as to just what results will follow when certain controls are moved. All cautions necessary for operating any standard machine will hold good for these special machines and some additional ones may also need to be observed.

Lathe — The lathe is one of the most important tools used in the gun shop or in fact any other line of the metal-working industry. The different types of lathes are: engine lathe, turret lathe, bench lathe, jeweler's lathe, etc. The size of a lathe is determined by the amount of swing measured from the centers to the tailstock ways, and the length of the bed, such as 14 in. x 6 ft.—that is, a 14-inch swing and a 6-foot length of bed. Altho the construction of a lathe is simple, it is capable of turning out a great variety of work, as noted throughout the chapters in both volumes. The beginner would do well to learn the names and uses of parts gradually; then he will be quite sure to understand clearly the functions of the parts of the machine and will always remember that a lathe is classed as a precision machine and should be well taken care of. Oil the parts often and you will be better acquainted with each of them.

The main part of the lathe is the bed, which is raised from the floor and supported by four legs. The more modern ones have a chip pan of cast-iron fastened separately to the legs. This type of lathe is used mostly in tool rooms. The height of a lathe is usually adequate for the convenience of the average person. The accurately machined surface of the bed carries the "headstock," "carriage," and "tailstock."

Overhead, if a motor drive is not used, is the "countershaft," which is fastened to stringers from the ceiling to receive the transmission by belt from the main-line shaft and transfer it by belt to the lathe. The bed is made wide and deep to withstand heavy cuts and to give the whole machine rigidity and strength. The upper surface of the bed has "ways" or "vees" which are accurately machined and scraped. The outside ways form a perfectly alined track for the carriage to run on. The inside ways provide a permanent seat for the headstock and a perfectly alined rest for the tailstock, which can be fastened in any position to suit the work.

Lathe Tools — It is very necessary for the beginner to have at least an elementary knowledge of the different tools which can be ground and used in the lathe. Tools required for use on the lathe must usually be ground to suit the particular

type of turning done, and proper grinding of the tools is absolutely essential for the best work. The old method was to forge lathe tools from carbon or high-speed steel bars; they were forged to shape, hardened, tempered, and ground. After many grindings they were again forged and tempered until the steel was too short to use conveniently. The forged tool is very rigid, being made of one piece of steel; however, these are rapidly being superseded for general purposes by the tool holder and high-speed tool bit, and parting tool or blade, because they are far more economical.

The tool holder is a very rigid tool, being made from a drop forging consisting of one piece of metal which has been correctly heat-treated. These tool holders are provided with a square slot into which the high-speed-steel tool bit is inserted and tightened by a set screw. The slot has a slight incline to give the tool a suitable top clearance or cutting shear, thus saving the grinding time and material which would be lost if top and front rake had to be ground on the tool bit. They come in three different types: straight, left, and right hand. The most suitable size is the $\frac{5}{16}$ inch, using high-speed tool bits of the same size. There are also the straight and offset parting tools, using thin blades which may be adjusted for any depth of cut. The same tool may be used for a facing-off operation by inserting a heavier blade for side cutting. There is also a boring tool made to hold different-sized boring bars, but most of the work of boring in the gun shop requires small tools; therefore, they must be made by the gunsmith to suit work of this nature, whether boring or inside threading operations.

There is also a knurling tool holder, which usually carries three pairs of knurls: fine, medium, and coarse. Each wheel cuts a helical groove in the metal, and as the spiral grooves are opposite, a diamond is formed. These tools are used extensively in the gun shop together with small jeweler's knurls for special work such as knurling the heads of thumb screws, etc.

Tool Positions — The position of tools in relation to the work being turned is a very important consideration, and those in the beginners' class who purchase a lathe will do well to study the effect of various positions of the tool, particularly on long turning such as on rifle barrels. Work is often spoiled and in many cases the machine is damaged by lack of foresight on the part of the student. The usual method of elevating or lowering the tool is to swivel the tool holder up or down on the rocker in the rocker rung of the tool post. The tool should never project any further from the tool post than is absolutely necessary, because the further it protrudes the greater will be the strain on the compound rest and cross slide caused by increased pressure from the last point of support, which is often sufficient to push the tool down, changing its setting and frequently causing it to dig into the work. The position of the compound slide rest, the location of the tool post in the tee-slots provided for it, and the type of tool holder used should all be considered in the setting of the tool. When work is being turned in the lathe chuck, it is easily seen that when the tool post is in a location as near the chuck as possible, the type of tool used will have the greatest influence on the condition of the work. The compound slide or cross slide of the lathe is frequently damaged by a careless mechanic who runs these parts into the fast-rotating chuck, because the tool is not set in the proper position. It is therefore advisable for the amateur to select the best tool for the work he has to do and to place it in position so that it will be rigid and not cause any damage to the work or the lathe.

The advice given for tool positions on the lathe dealt with the position of the tool holder and the tool from an adjusting point of view. It also deals with the influence of the tool position in producing a smooth clean surface on the work. (Refer to Chapter IV, Volume I, for proper grinding of lathe tools.) To explain how the tools should be ground would require too much space and would be of little interest to the experienced mechanic; and I am assuming that the beginner will come in personal contact with the experienced mechanic to teach him correct grinding methods.

Work on a lathe may be carried out in three different ways: on the lathe centers, chucking work, and face-plate work. Various operations may be undertaken in each of these "set-ups." Then, again, a lathe can be utilized to accomplish various other operations in rifle-barrel work. Most ordinary work on the lathe is measured by micrometers and calipers, and the successful use of calipers can only be achieved by constant practise. The calipers are used to obtain many variations of size, and it is only by developing a sense of "feel" that any guaranty of size can be obtained. Many beginners free the caliper over the work, making believe that it is the size to which the calipers are set; but because of the spring in the legs they just spring over the turned surface. It is therefore necessary to develop a very delicate touch to use calipers successfully. Never try to caliper work while it is running. It is rarely accurate and the calipers or micrometers may be caught in the work and broken.

Fig. 4
Gould & Eberhardt shaper in operation

The cutting speed required on lathe work is usually determined by experience before securing the best efficiency from the lathe tools employed upon different types of materials. It is advisable to turn different steels, cast-iron, and brass, to see just what the maximum speed should be. A cutting lubricant should be used when turning steel, to prevent excessive friction and to conduct the heat, thus preserving the point of the tool and producing a smooth finish on the work. Lard oil, which has often been recommended for other work, can be used, or some other cutting compound which can be purchased ready mixed. Lard oil is best for thread cutting.

Shaper — The shaper is used chiefly to produce flat surfaces and to rough out surplus stock on gun parts for milling-machine operations and various tool work such as dies and jig parts. Shapers are very suitable for small work, while a planer is designed to operate on larger work. There are two types; namely, geared shapers and crank shapers. On the geared shaper, the ram is driven by a gear meshing with a rack on the bottom of the ram; also with a means for a quick return of the stroke. The crank shaper is driven by a crank motion with a means provided for a quick return of the stroke on the ram. The size of a shaper is governed by the size of work the machine can do. A 16-inch shaper, which is the most suitable size, will finish a surface 16 x 16 x 16 inches.

Milling Machine — This type of machine tool is one of the most useful in the gun shop or in any other line of the metal-working industry. The milling machine was first designed by Mr. J. R. Brown of the firm of Brown & Sharpe, for the purpose of cutting the spiral flutes in twist drills, and from that foundation the machine has been developed for a great many other uses. The attachments made for most milling machines are built very rigidly and not like many other makeshift contrivances built to go with machines. Many such attachments answer the purpose for odd work encountered, but in the end special machines must be designed for production purposes.

When the gun shop is equipped with a universal milling machine having all attachments such as a

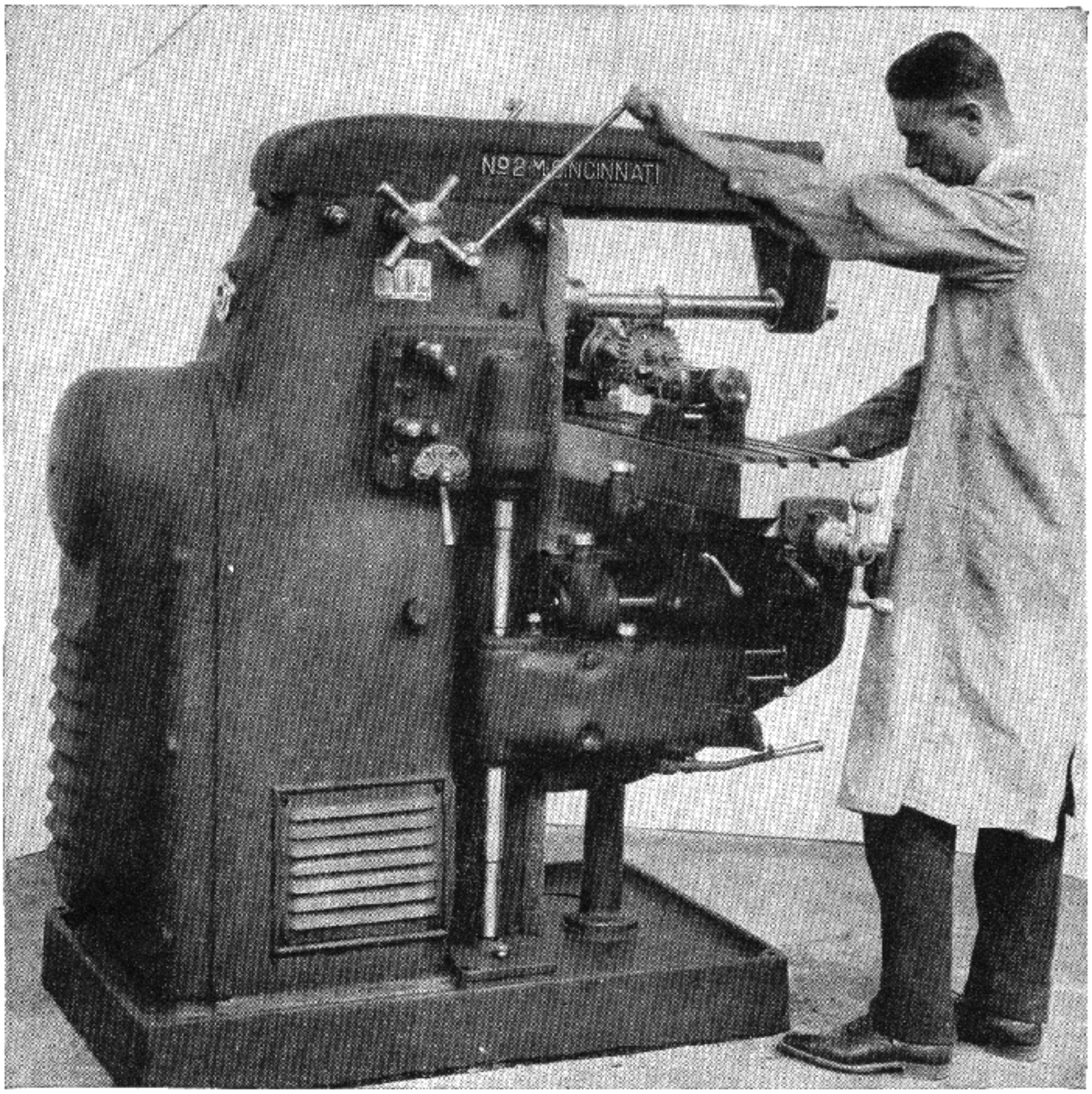

Fig. 5
A Cincinnati milling machine in operation

vertical head, rotary table, slotting atttachment, dividing head, center, vise, etc., it is possible to accomplish most of the work encountered on all gun parts. The work is held on the table by various devices and fed against the revolving cutter, which usually has several cutting edges, each tooth cutting away a portion of the material and producing on the work a shape similar to the form of the cutter. The cutters are made in different forms to produce work of regular or irregular shapes, to cut grooves, slots, flutes in taps, reamers, drills, etc. We have already mentioned so many operations which are done on the milling machine that you will understand how difficult it is to operate a large shop successfully without one. The latest machines are usually driven by a motor or directly from the line shaft by belt to the speed cone, and so direct to the spindle through gears similar to a lathe to obtain a further range of spindle speeds.

An endless amount of information could be given on such a machine; for to do justice to a treatise of this nature, a number of tables should be published, together with endless diagrams; therefore I must ask the interested reader to secure books dealing with this type of machine. I have had much experience with machinery, yet I must consult a hand-book continually on certain operations. However, for some of the simple operations, experience has taught an operator or mechanic to use certain cutters for certain work and to know that the table should be fed in the opposite direction to the rotation of the milling cutter. This is done since, if the work is fed against the cutter in the direction in which the cutter is revolving, the cutter will tend to climb on the work and probably be ruined. This is the beginner's problem, and it will be best for him to experiment on a cast-iron block, which involves the use of the plain or universal vise bolted to the table and also the use

of a plain milling cutter of sufficient length to cover the widest cut. I shall assume that the reader is interested enough to complete a study of this machine, for it is one of the most essential in shop practise for producing articles and parts of firearms.

Grinding Machines — Grinding has developed in a comparatively short time from a simple operation involving the use of an ordinary grindstone to intricate work in the finishing of machine products requiring the use of elaborate precision-grinding machines. Grinding is an operation used so extensively in gun work that a good knowledge of it is absolutely necessary. The reader should follow up the work shown throughout the chapters and also study abrasives and their use; also the manufacture and selection of grinding wheels.

Grinding machines are similar to the milling machine, except that their operations are not so complicated. Still, grinding operations have been used on all classes of work, and when one studies the subject there is an endless number of special machines for such purposes. There are two distinct methods of machining work by grinding, namely, hand grinding and machine grinding, and in both methods grinding machines are used.

Three types of machines are employed in gun work: a cylindrical grinding machine for tool work, a surface grinding machine, and an electric bench grinder for hand tools. The latter has been discussed in Chapter IV, Volume I. Machines for precision grinding are usually classified under the following groups:

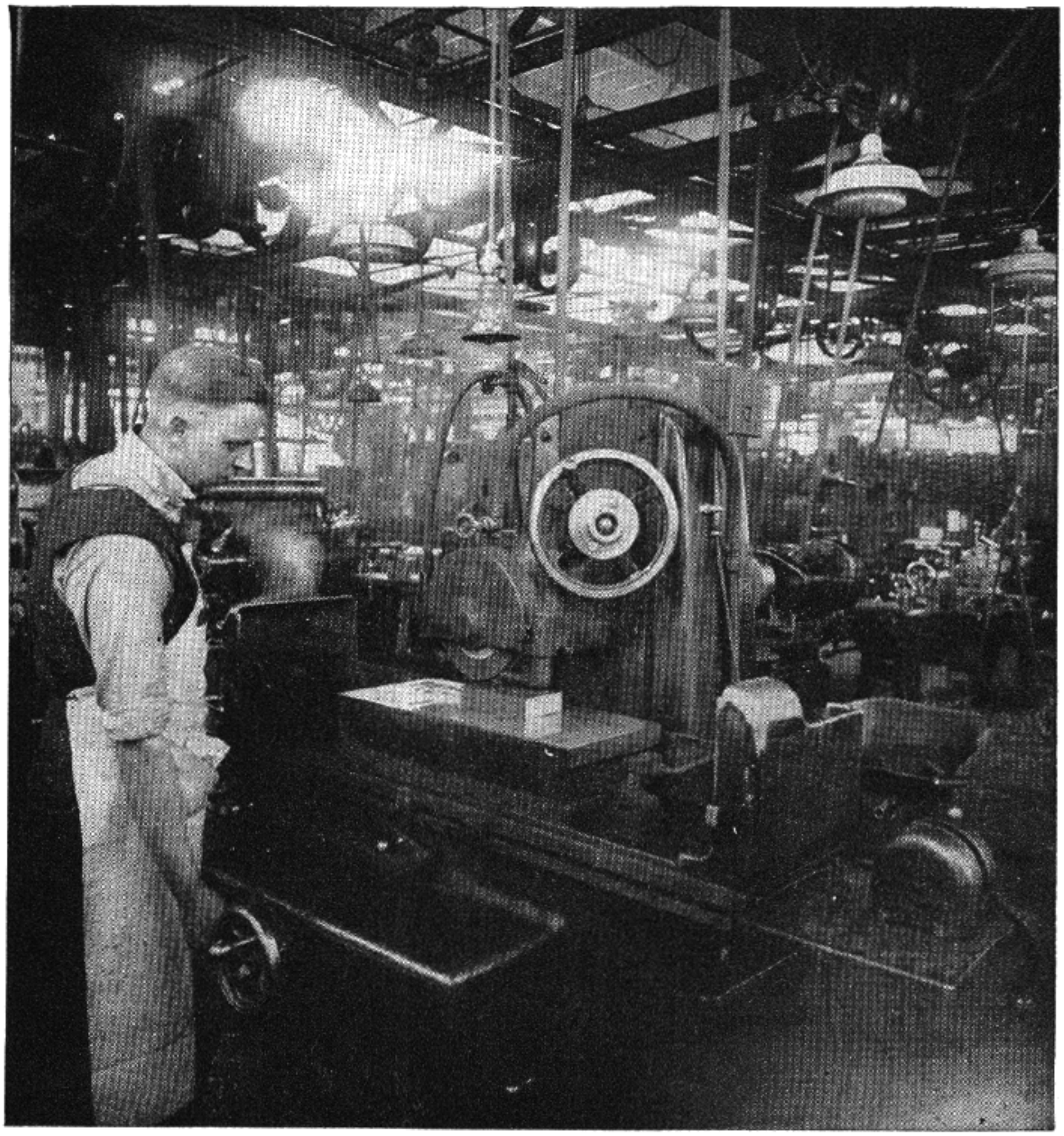

Fig. 6
Surface grinder in operation. Very little use is found for this in the small gun shop. In the larger tool room, however, it is essential

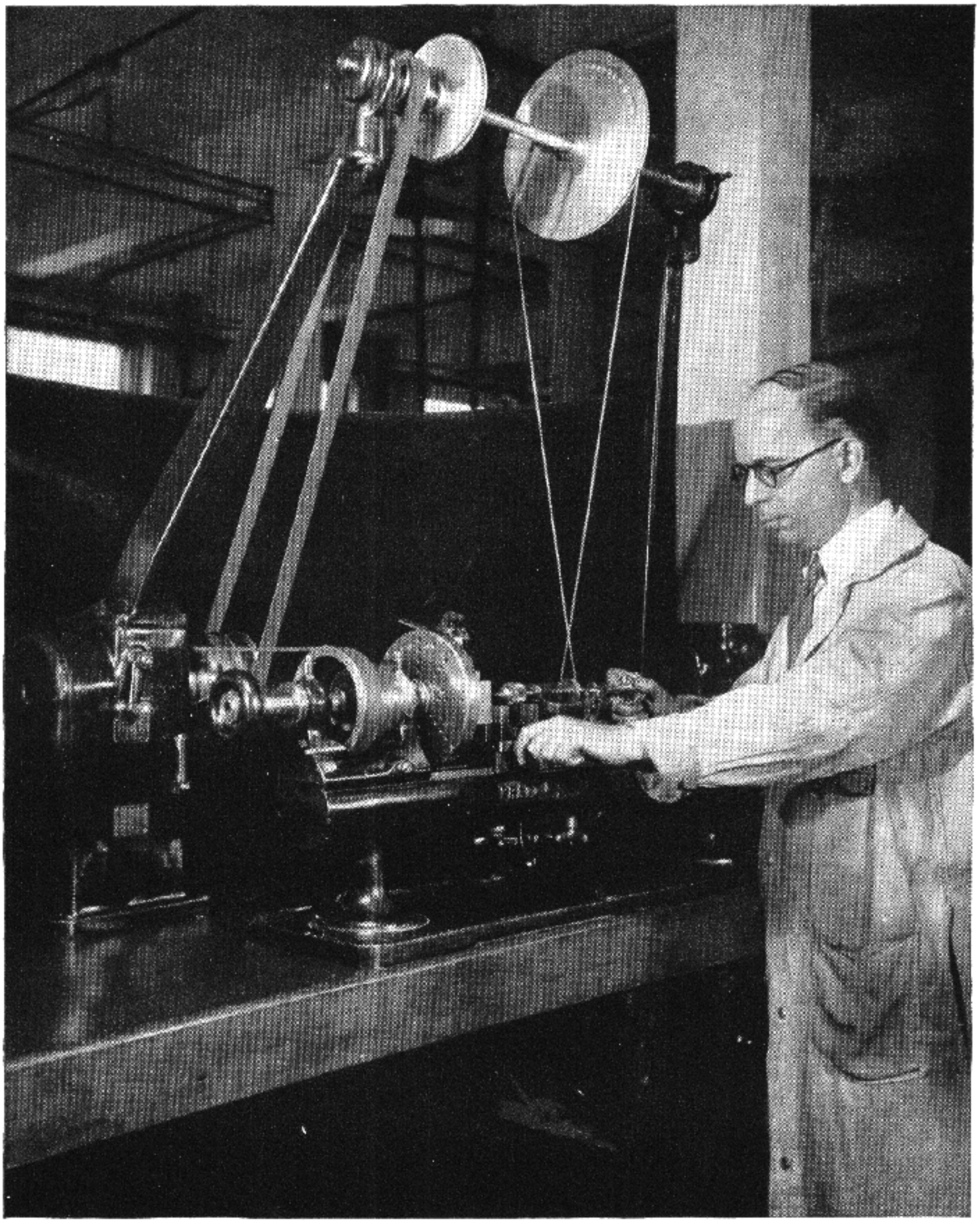

Fig. 7
Pratt & Whitney bench lathe: Internal grinding attachment in operation

A. Machines for grinding milling cutters, machines for hand reamers, counterbores, taps, and work of a similar nature to keep production tools in order.

B. Machines for grinding cylindrical and conical surfaces, both internal and external. Under this group a machine is used for grinding barrels, reamers, rifling heads, etc. A bench lathe equipped with both internal and external attachments is used to great advantage in small-tool work to manufacture rifle parts. Also under this group may be classified the Universal grinding machine, which can grind external cylindrical and conical surfaces of discs, the teeth of milling cutters, reamers, rifling heads, counterbores, and plain surfaces having small areas.

C. Machines for grinding plain surfaces such as the surface grinder with magnetic chuck for grinding a special tool with flat surface.

D. Machines for grinding work of a special nature. This group includes the drill-grinding machines, portable machines usually having a motor-driven spindle and used on a lathe, milling machine or shaper.

Most cutting tools are simply made with an angle entering the material by the sharpness of their edges and forcing it open or separating it by the gradual increase of thickness it encounters with its angle-like form. A thin-edged or sharp-angled wedge tool cuts freely because it generates less

friction than a thick or abrupt angle tool. A common ax is a simple example of the wedge principle, and every one reared in the country is familiar with the tremendous power of an ordinary wedge when splitting logs. If a wood chisel is forced in a piece of wood, the chisel tends to follow the direction of the side nearest the material, and as it penetrates deeper it requires more power to push it owing to the increased amount of material it is removing. If the chisel were held in a vertical position, as in stock work, the wood would be pushed and scraped off and the edge rapidly become dull. Grinding and stoning operations should be continually in force to keep all tools in their sharpest condition, and on other work a true and even surface retained which cannot be achieved with turning tools alone.

Selection of Grinding Wheels — Selecting a suitable grinding wheel for a given job is a comparatively simple matter for the experienced mechanic when he knows the condition of the machine, the material to be ground, and the shape and size of the work. His knowledge and skill in grinding tell him how to true the wheel, what speed of work and transverse to use, and what depth of cut to take in order to make the wheel cut freely and to produce the desired surface finish in the shortest possible time. However, correct wheel selection is dependent upon proper machine manipulation. The operator should always keep in mind the thought that an apparently poor-cutting wheel can be changed into a good-cutting wheel by changing any one of several things: work speed, wheel speed, depth of cut, or manner of truing the wheel. When a wheel is "too hard" it shows a glazed surface very quickly, and when a wheel is "too soft" it does not hold itself together; the logical thing to do is to select a wheel recommended by the manufacturer for the class of work being turned out.

Nearly all the grinding operations are confined to the tool operation, and a medium grade is usually correct.

Wood-working Tools — Wood-working tools for the gun shop enable one to manufacture stocks very economically, but for the small gun shop or the home workshop I can only recommend some of the small wood-working units put out by a few manufacturers. To my knowledge one of the best is the "Delta," made by the Delta Specialty Co. of Milwaukee, Wisconsin. They make complete combination work shops which can be used by the beginner for nearly all roughing-out operations on gun stocks.

There is great pleasure and fascination in making things from wood yourself. Every father might well construct a shop for his boy, allowing him to acquire the skill to produce work and to learn the use not only of his hands but of his head as well. Such investments often pay greater dividends in a boy's education than any other. The tools placed on the market are practical and their catalogs list reasonable-priced tools for wood-working purposes.

CHAPTER II

Special Gun-shop Tools and Accessories

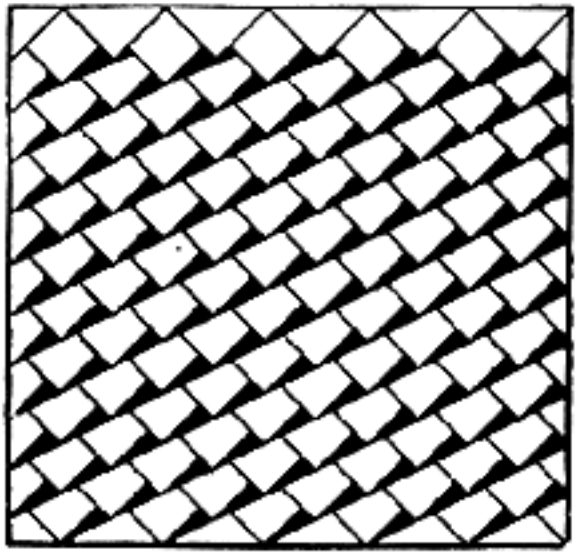

CHAPTER II

Special Gun-Shop Tools and Accessories

THIS chapter is written to assist the advanced mechanic in laying an intelligent foundation for the more highly specialized fixtures used in gun work. It does not concern the special tools and appliances used in large manufacturing plants devoted to gun work, but to the needs of the individual, for methods of mass production would be of no interest to him. He is chiefly concerned with practical problems pertaining to a more highly developed practise and given to those who will cater to the needs of men who seek something just a little different from that turned out by set industrial rules here in America. Ask some of the British gun makers for something out of the ordinary that they do not manufacture; you will find them only too willing to supply your needs. In this chapter specific tools or parts of the equipment are set aside and dealt with practically.

At the conclusion I know that the difficult problem of solving the drawings will only be difficult because the beginner does not approach the problem in easy stages. Most of the drawings are explained in detail, and I shall take it for granted that he will help himself in many ways. These drawings exhibit a very high development of engineering skill, and I cannot neglect those who have devoted years of study to mechanical engineering for the man who cannot read a drawing. The man in the latter class should study the drawings and then construct a part from them to suit his particular needs. The time will be well spent for the interested person. Sometimes apparent things are quickly forgotten, and in practical work the need for a quick and accurate solution is imperative. If a solution to a problem appeals to your reason as being right, it usually is right. Unfortunately it is seldom that another man's device or method, or even his parts, can be used exactly as you used them. Either the work itself is somewhat different or the shop equipment is not the same; unless all conditions are similar you cannot use the other man's device in its entirety for your work.

The field of special gun-shop equipment and tools is so wide that no one book can cover it, but the experience gathered here can be of great assistance to the ingenious mechanic in suggesting methods of simplifying some of the troubles encountered and leading to the adoption of various accessories to overcome the difficulty and effort caused by makeshift contrivances often seen in small shops. If practical application is made of these illustrations, I am confident that those who follow the ideas will benefit thereby. All drawings presented here and elsewhere in these volumes have been proved from practical experience and nothing has been taken for granted.

The same subject may sometimes be treated several times, as in the case of the checkering cradle, adjustable tool grinder, and rifle holder for testing; but each time it is treated in a more advanced manner, according to the increased understanding of the reader.

Checkering Cradle — Figure 8 illustrates an all-metal checkering frame and bench made practical by a rigid foundation and quickness of adjustment. This frame would only be practical in a large manufacturing plant and I would not advise the novice to construct it unless he wishes to acquire experience in the construction of some of the advanced stages of mechanics. The two advantages of such a frame over the other simple ones, shown in Volume I, are the ball socket and the manner of clamping the work between centers. After the reader studies the drawing very closely the simplicity of its construction is quite apparent. The frame *C* is made from 1½ x 2½ inch angle iron with a ¼ x 1¼ ratchet piece *B* and these are riveted together, using the blocking *E* in the center when the plates *F* come together. The blockings *D* at each end are riveted, using 5/16 inch rivets for that purpose. End stocks *A* are also made of angle iron measuring 4 x 6 inches, with a piece of 5/16 x 1 bolted on the end. The bottom is bent at an angle of 22 degrees and 30 minutes, which engages the ratchet piece *B*, and when the bolts pull the end stock against a piece clamped between centers a considerable leaverage is possible. The ball *J* is set on the end of the elevating screw, which makes it possible to turn the cradle at any angle in the act of checkering and is a feature often needed. The clamping bolt may be adjusted to any degree of tightness desired. The large elevating screw makes it possible to carry

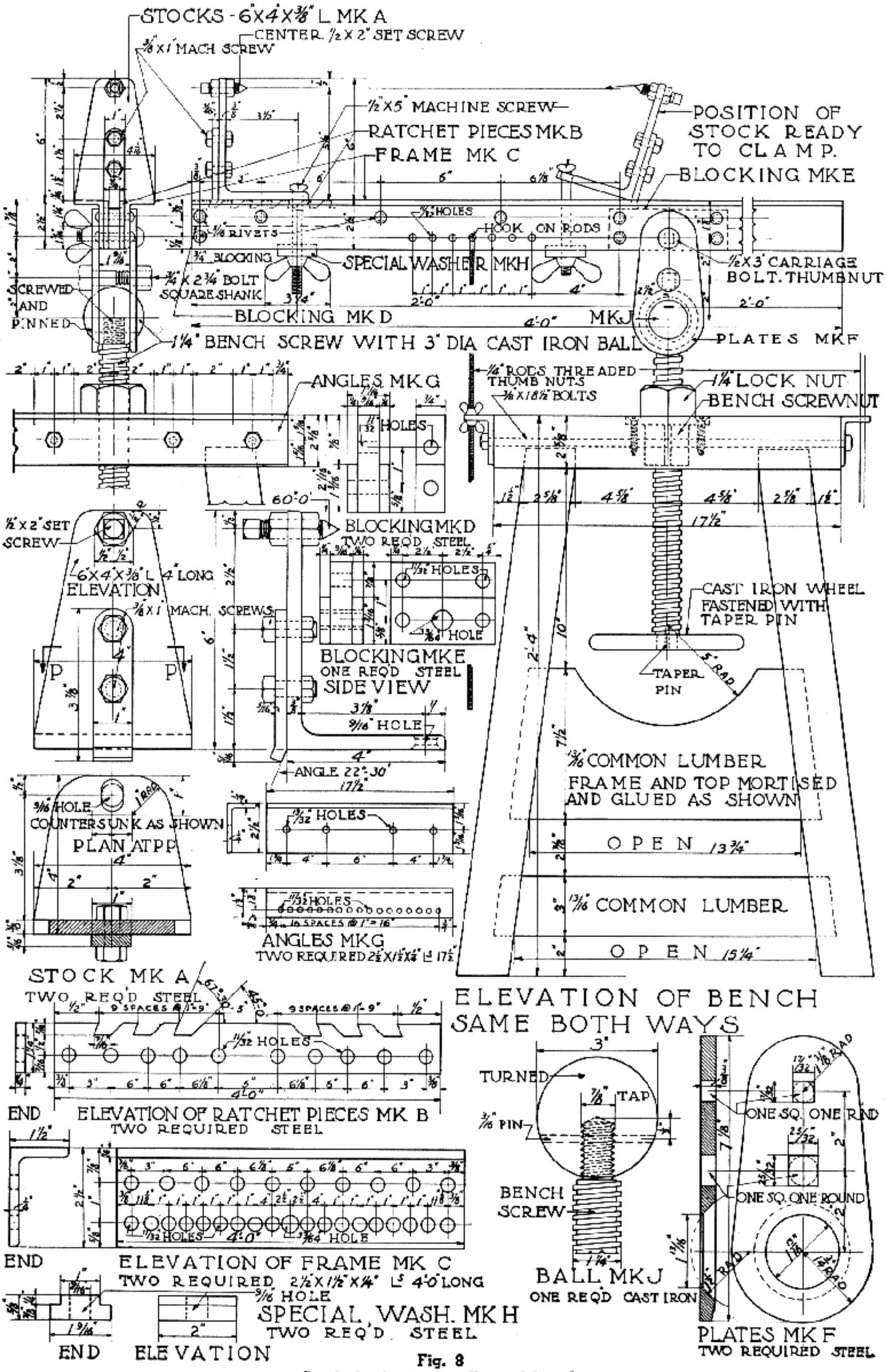

Fig. 8
Steel checkering cradle and bench

the height so that any build or height of person can adjust it to his stature. The two locking rods shown on the end of the bench and connected to the cradle are optional, and only an added feature in case the work is clamped between the centers requiring an extra-rigid clamping arrangement. The bench which supports the cradle can be made in any manner seen fit.

The pointed set screws, which are shown, can be used for polishing rifle barrels between centers when a barrel and chamber plug are employed; but for the purpose of checkering a stock, a cupped set screw should be inserted in place of these, as it does not have a tendency to split a piece of wood, as does a pointed screw.

Adjustable Tool Holder — Figure 9 illustrates a highly improved tool holder to be used in connection with the bench grinder, and is one of the most practical tool holders for the purpose of grinding flat wood-working chisels, plane bits, etc. The detailed drawing looks rather complicated, but it is really one of the most simple of devices to make. The saving in time pays the wood-working department to install such a tool-grinding fixture. The square rod *E* is the slide with *B* adjusted and the two small angle blocks, so it will just have a free sliding fit. *H* and *F*, two spacing tubes, and the adjustments for different angles are effected by bolts *G*, and any desired adjustments may be made so that any angle can be had by moving the arms *J* and *K*. When the desired angle is obtained, the bottom bolt is tightened and the center bolt is only made friction tight. The square slide rod *E* must be turned and changed each time a new angle is set and then retightened, and only the center bolt employed to control the amount of material to be removed. The center can be clamped tight and the square rod made so that any amount of material can be removed from a tool; therefore, either one serves a double purpose.

The tool rest *B* is very simple in construction; a 2 x 2 inch angle iron is shaped for this purpose and made wide enough so that any plane bit can be clamped to its surface. Two pins or plugs are set in such a position that a plane or chisel can be set against their sides and they will come at right angles when ground; accordingly, the completed fixture should be set upon the bench at right angles. Many have expressed a desire for such an adjustable tool holder, particularly those who are just starting out in the shop; they find it rather difficult to keep a wood chisel or plane bit at the proper angle on a grinder, but with either this tool or the simple wooden one illustrated in Chapter II, Volume I, it is possible to control the grinding and at the same time produce a perfect cutting bevel. Too much care cannot be exercised in the use of such a holder so that tools will not be burnt; but since wing nuts are used for clamping purposes, the tools may be very quickly removed and dipped in a can of water which should be close by; or water may be freely sprayed on the tool in the act of grinding.

Barrel-cleaning Tools — In order to keep a rifle or shotgun barrel in perfect condition, suitable cleaning rods should be made, combined with all the strength possible to make the labor of removing residue or other harmful agencies a pleasure. Figure 10 illustrates two cleaning rods and a water cleaning tube and funnel. The construction of the rods shows the best design I know of, and the rods are durable and strong enough to withstand hard usage. The parts shown in the drawing, Colonel Whelen and I worked out a number of years ago; and I know that those who were fortunate enough to own any which were made while I was in Philadelphia understand the merits of its construction. The illustration gives the details of a caliber-.30 cleaning rod, which is one of the most popular calibers.

By showing a large detail of the joints the reader can readily see where the strength of joint lies. The male end should be threaded in a true-running lathe collet, and this is done in a sequence of operations on all the sections. First set the lathe tool to remove a roughing cut, leaving 0.020 inch for a finish cut, and at the same time form the radius. All sections are roughed to the correct diameter and stated length on one setting of the lathe tool. The second operation finishes these to size and forms the corner radius, also on one setting of the finishing tool with the correct radius ground on the corner. The third operation places the round recess at the end of the threaded section for the threading to free itself from the metal. The fourth operation is the threading of the ends, which is also accomplished in the lathe with a threading tool and the lathe geared up for the correct thread. The thread is chased within 0.005 of size and then finished with a finishing die similar to those used to finish a tap to a given size as explained in Chapter III.

The operation on the female end is also achieved by similar operations. Each section is centered with a combination center drill, and then comes the second operation, drilling to the correct depth with a standard tap drill. The third operation is to ream the recess and at the same time form the radius on the inside to correspond to the radius on the male section; a special tool should be made

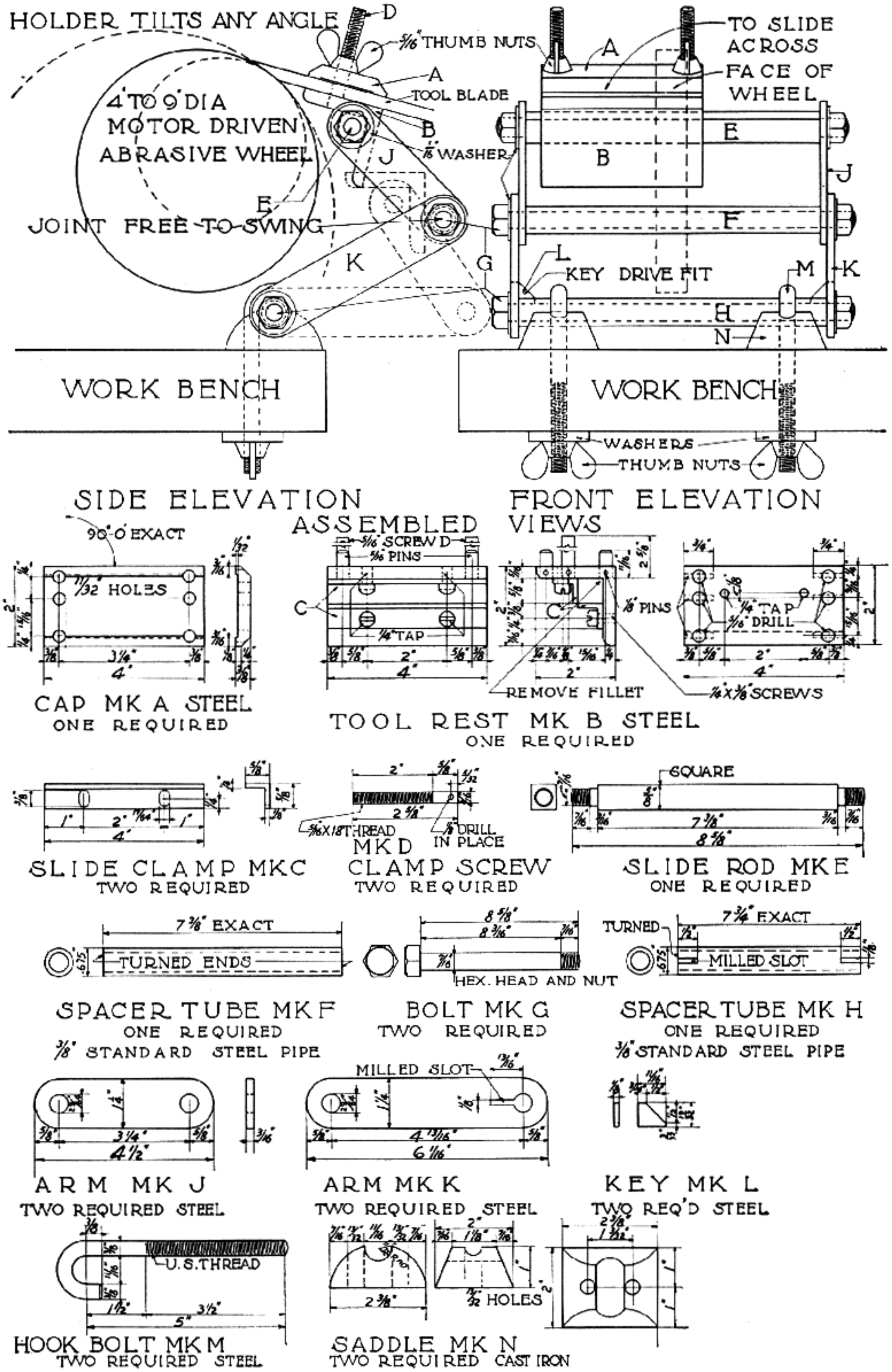

Fig. 9
Improved adjustable bench tool grinder

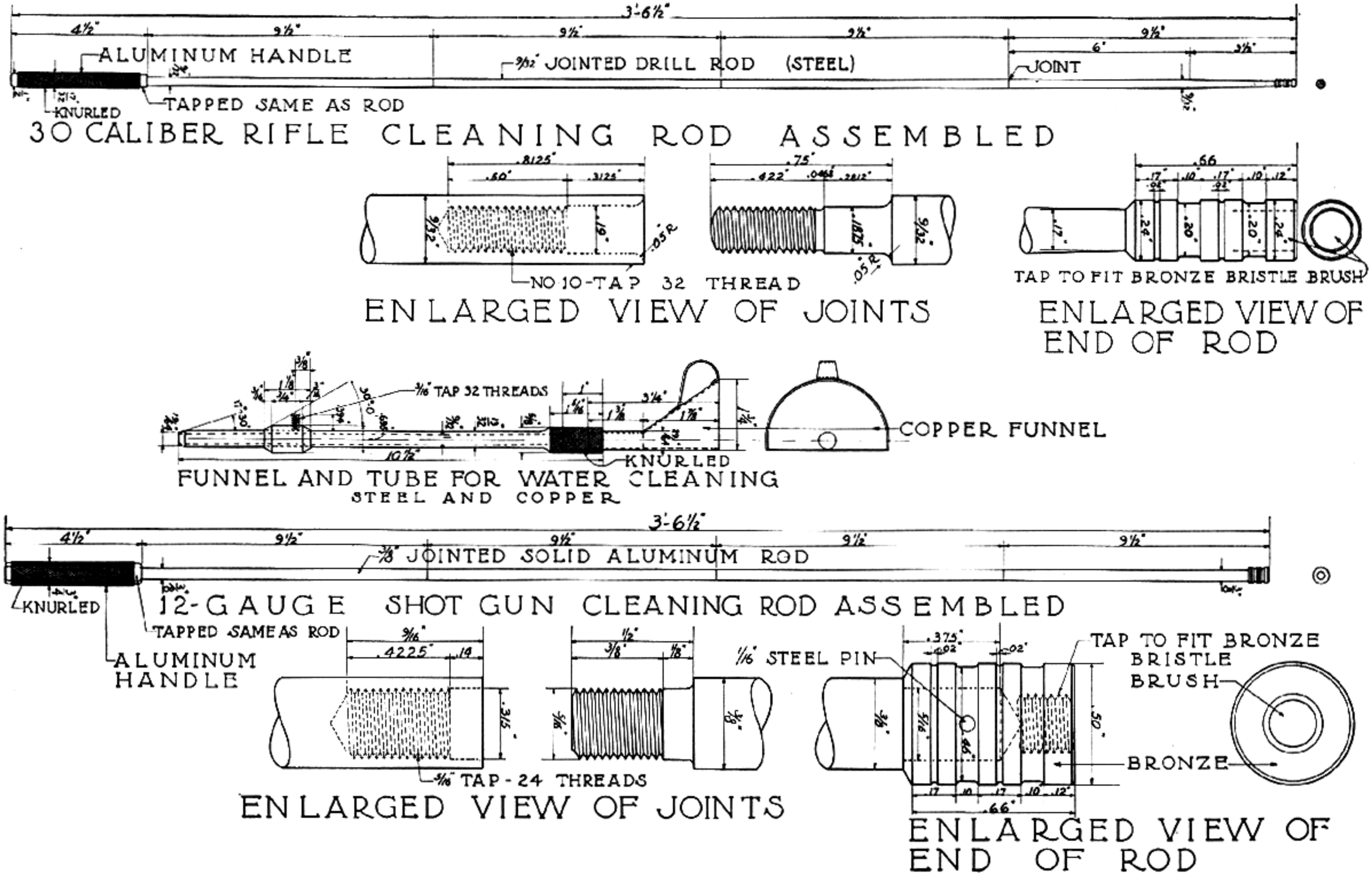

Fig. 10
Barrel cleaning accessories

for this purpose which will ream the recess to the proper depth and at the same time form the radius when it reaches that point. The fourth operation is to tap all the sections; this also is done by holding them in the collets of the lathe and using a true-running tap; white lead should be used as a lubricant, and as the tap is started the lathe should be revolved by hand to check the tap to see if it is running true or given a true start for which it must continue the full depth of the tapped hole. After the ends are finished they are washed in gasoline to remove the chips.

The turning of the ends or tips is the next operation, and then drilling and tapping the tip for the bronze bristle brush. The operation of turning the end and planing the taper back from the tip is a regular lathe operation requiring no explanation. The handle may be made from either aluminum or cold-drawn steel. If steel is used, the center may be drilled out to remove a considerable amount of weight and then case-hardened, only allowing enough metal on the end to form the tapped hole.

When making cleaning rods for other calibers, the corresponding size of drill rod should be used: .22 caliber, $\frac{3}{16}$-inch rod; .25 caliber, $\frac{7}{32}$-inch rod; 7 mm. or .270 caliber Winchester, $\frac{1}{4}$-inch rod; caliber .30, $\frac{9}{32}$-inch rod; .350 and .375 caliber, $\frac{5}{16}$-inch rod. Rods for larger calibers can be made of drill rod or duraluminum, the same as shotgun rods, to reduce weight; or larger tips could be placed on the $\frac{9}{32}$-inch rod according to the caliber the rod is intended for.

Six-inch short jointed cleaning rods are made similarly. For caliber .30, a $\frac{7}{32}$-inch drill rod is employed, and for the handle end a $\frac{1}{4}$-inch length of drill rod is used, turned up to $1\frac{1}{2}$ inches on one end to a $\frac{7}{32}$-inch diameter and then the $\frac{1}{4}$-inch size is knurled. Six of these lengths are used, and the very neat and compact rod, when finished, can be conveniently carried in the butt stock under the butt-plate trap.

A complete description of the caliber-.30 cleaning rod has been given; therefore one will not be necessary for the shotgun rod as illustrated in Figure 10. The same-sized rod may be used for all gauges, except that different-sized tips must be made for the ends. The cleaning tube and funnel illustrated in Figure 10 is rapidly losing the favor it had a few years ago, because of the use of the new primer mixture; but many still include this among their equipment. The tube is made from a piece of heavy tubing measuring $\frac{1}{4}$ x $\frac{5}{8}$ inch, and the hole is enlarged to $\frac{9}{32}$ inch for a .30 caliber; one end is knurled and then drilled out to take the end of the funel. An adjustable locking collar is

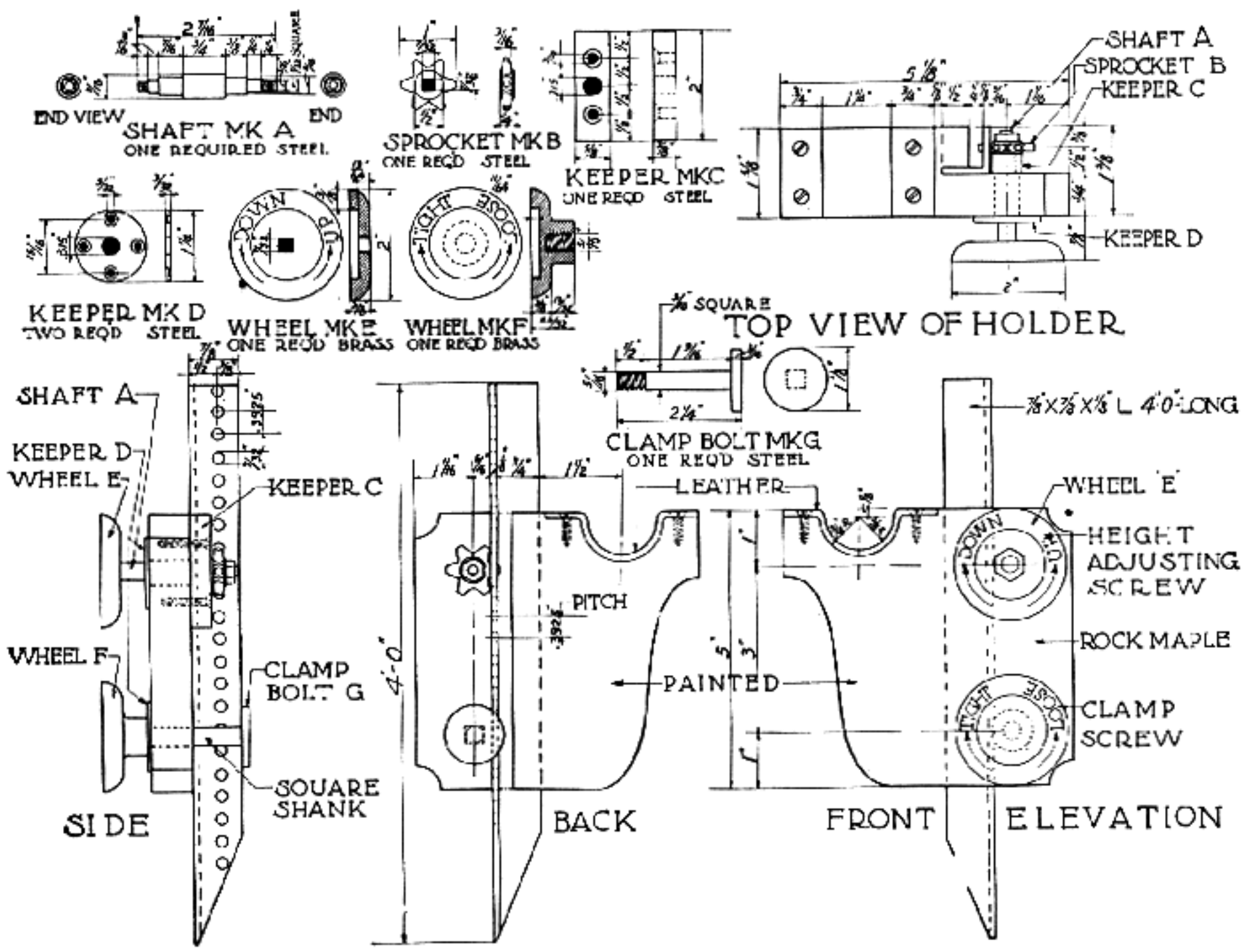

Fig. 11
Improved rifle holder for testing purposes

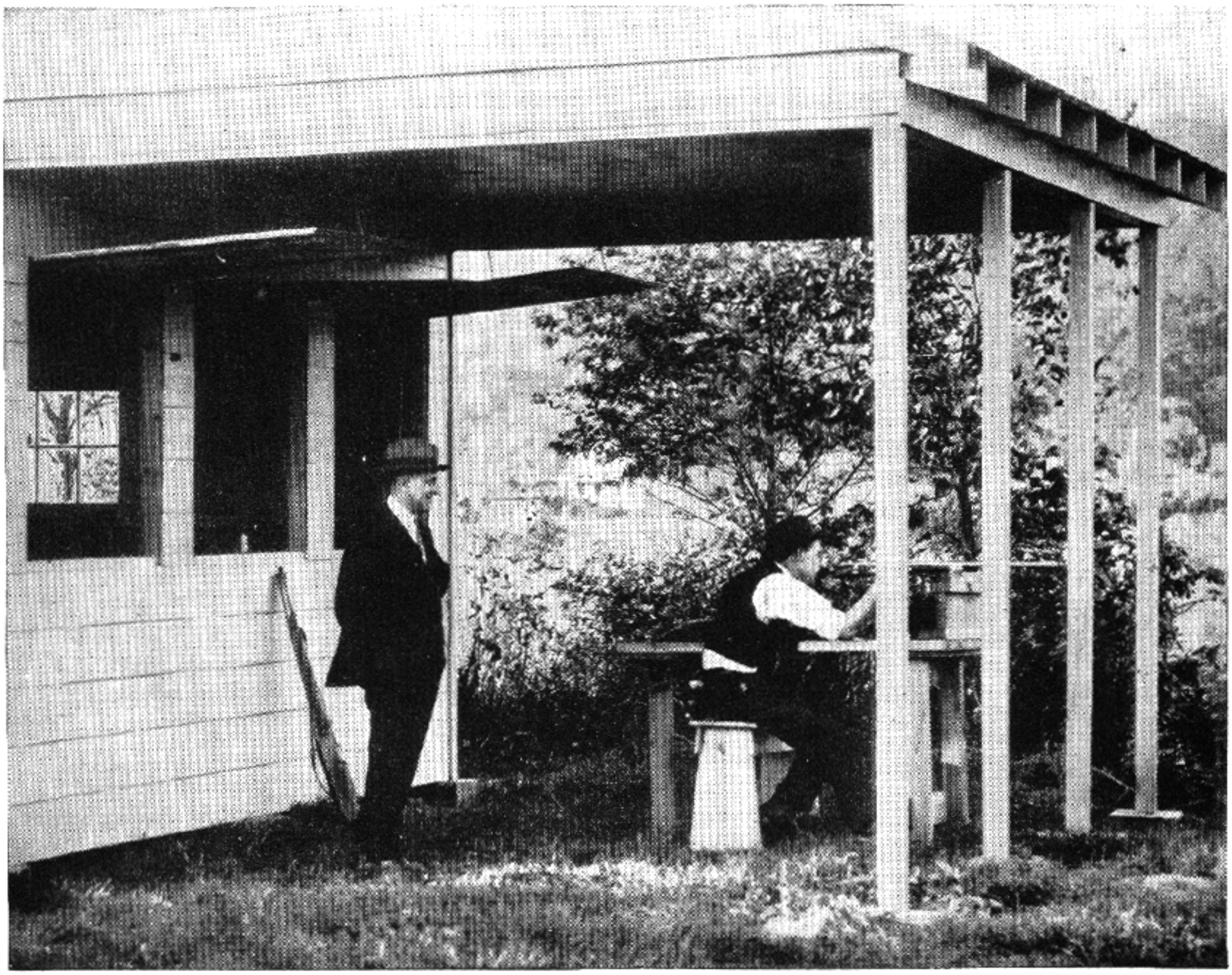

Fig. 12
A model testing house with shooting bench made so that the user can fire from either right or left side

made with a screw; this is used for two purposes—to lock the collar in place, and to keep the tube in position when it is inserted in the receiver and turned into its locked position.

The funnel is made from copper, which is cut out, formed, and the seam soldered, as shown in the drawing. A caliber-.30 cartridge case is cut off and soldered to the bottom, and because of the slight taper in the case a very tight fit is possible in the drilled and tapered end hole. Different designs may be made to suit any rifle, and since the foundation has been laid I suggest that the reader construct such a device even if he uses a cartridge case with the end drilled out and a tube soldered to it.

Rifle Holder — Figure 11 illustrates an improved rifle holder for targeting and testing purposes. Chapter II, Volume I, shows a simple form of holder, but those who wish something a little different from the ordinary can construct one of these. The holder may be made from an aluminum casting instead of a piece of maple, and the stake from a piece of 7/8 x 7/8 inch angle iron. A series of holes are drilled on one side so the sprocket *B* can work in these to secure the "up and down" movement. Very close adjustment is possible by holding the clamping screw just friction-tight, and when the correct position is reached the block is tightened into position. The face of the radii is covered with leather, glued, and screwed into position.

Every rifleman should have one of these holders; it not only enables him to secure perfect groups, but it proves the only means of securing the proper sight-setting on a rifle. It is used in the sitting or prone position, and when an elbow and muzzle rest is required, a shooting stand should be made like that shown in Figure 12 (the form of testing bench used at the range). A right- or left-hand shooter may also use this table. The top of the upright is padded and a leather covering is put over the material used under the leather. Hair used to pad furniture is good for the padding.

Rifle Machine-rest for Accurate Shooting — The object of employing a rest when testing ammunition for accuracy is to minimize error and to stabilize the best methods of bullet manufacture. With the very best rest it is possible to eliminate any source of error to a great extent, but not entirely, in some designs. Many factors enter into their operation, and in the final analysis the human being who operates a machine rest, no matter how well designed, can always make a mistake, even tho it is a minor one.

At the Frankford Arsenal we came to the conclusion that the Mann form of mechanical rest was the only one worth considering; that is, if the greatest possible accuracy was to be expected. The Mann rest is the six-point rest with the best-located set of six points yet devised for testing ammunition only. Before any description is given of other forms of machine rests, it must be remembered that every experimental type of rest may have its own peculiarities, and that the sighting to give a central impact of shots with one type may give a very wide group with another form of design.

This is due to the fact that every rifle barrel vibrates when fired, and that any particular control of the barrel interferes to a certain degree with all vibrations, and consequently with the line of departure. Slide rests and similar mechanical devices requiring a means of clamping the rifle are not altogether satisfactory. The most usual example is the Frankford Arsenal rest, in which the rifle is clamped at various points, pressure being applied by winged nuts, and the whole mass of metal recoils in a solid V-shaped slide. After each shot a heavy spring returns the rest to its firing position in the V's ready for the next shot. These rests are known as fixed rests.

There are two serious objections to the Frankford Arsenal rest: first, a highly skilled mechanic must bed down the rifle and watch it continually; secondly, the resulting groups are not the exact results of a perfect barrel, of a perfectly designed bullet, or of a rifle in its own stock.

The rest designed on the principle shown in Figure 13 proves the true accuracy of a rifle fairly well; still, a number of experimental factors can be considered, and one is the clamping at the muzzle. Instead of a three-point screw bearing, plungers could be used with springs, having screws for the correct pressure on the plungers to allow for vibration.

There remains the true geometric method attained by Dr. Mann's six-point rest, which is the most perfect for testing the accuracy of ammunition. When six definite separate points control the position of the rifle barrel, it can be replaced on the rest time after time in exactly the same position. Naturally it is essential, in order to achieve this, that the points should rigidly maintain their relations to one another and to the concrete base to which they are fixed, while the cast-iron base itself must be bolted to it so that adjustments are possible for elevation, depression, and windage. The reason for these six definite points is that every body has six degrees of freedom: three of translation and three of rotation.

Dr. Mann solved the problem by locating the six contacts in the best manner for testing the accuracy of a cartridge. At times it is found essential to test the cartridge alone. For this purpose Dr. Mann used a barrel weighing, with its action, nearly fifteen pounds. By preference much of the weight was placed in the barrel. The barrel was mounted in two concentric rings of solid metal, one near the muzzle and one near the action. Any convenient action was fitted to the barrel and the whole was set on a heavy casting with a large V, capable of being elevated and traversed. The V carried a front stop up to which the front ring was set and also a lateral stop for revolutions to insure that the trigger guard or the action was always revolved to the desired location—12, 3, 6, or 9 o'clock. Very little effort is required to release the trigger without moving the gun, and the actual defects can be checked in the ammunition. The shooting of such a rest must be seen and used to be appreciated.

Machine Rest — Many riflemen and gunsmiths have expressed a desire for a machine rest for testing purposes. The machine rests we had at the Frankford Arsenal would be too elaborate in design and far out of reach of the average rifleman or gunsmith. Figure 13 illustrates one of simple design which is very easy and economical to construct. It is made on the same principle as the rifle vise shown in Figure 87, except that the vise is clamped to a heavy back plate and this is clamped to a heavy piece of angle iron which is bolted to a 2-inch piece of cast-iron set upon or in a concrete foundation. A simple method of adjustment is possible in any direction by set screws. The nuts are left friction tight, adjustments made for a few trial shots, and then the clamping nuts are made tight. Suitable bushings must be made as shown on the barrel-vise drawing to fit the barrel ahead of the receiver, and when once the barrel is clamped as it can be in such a vise, the most severe recoil will not move it. An inclinometer may be placed upon the barrel

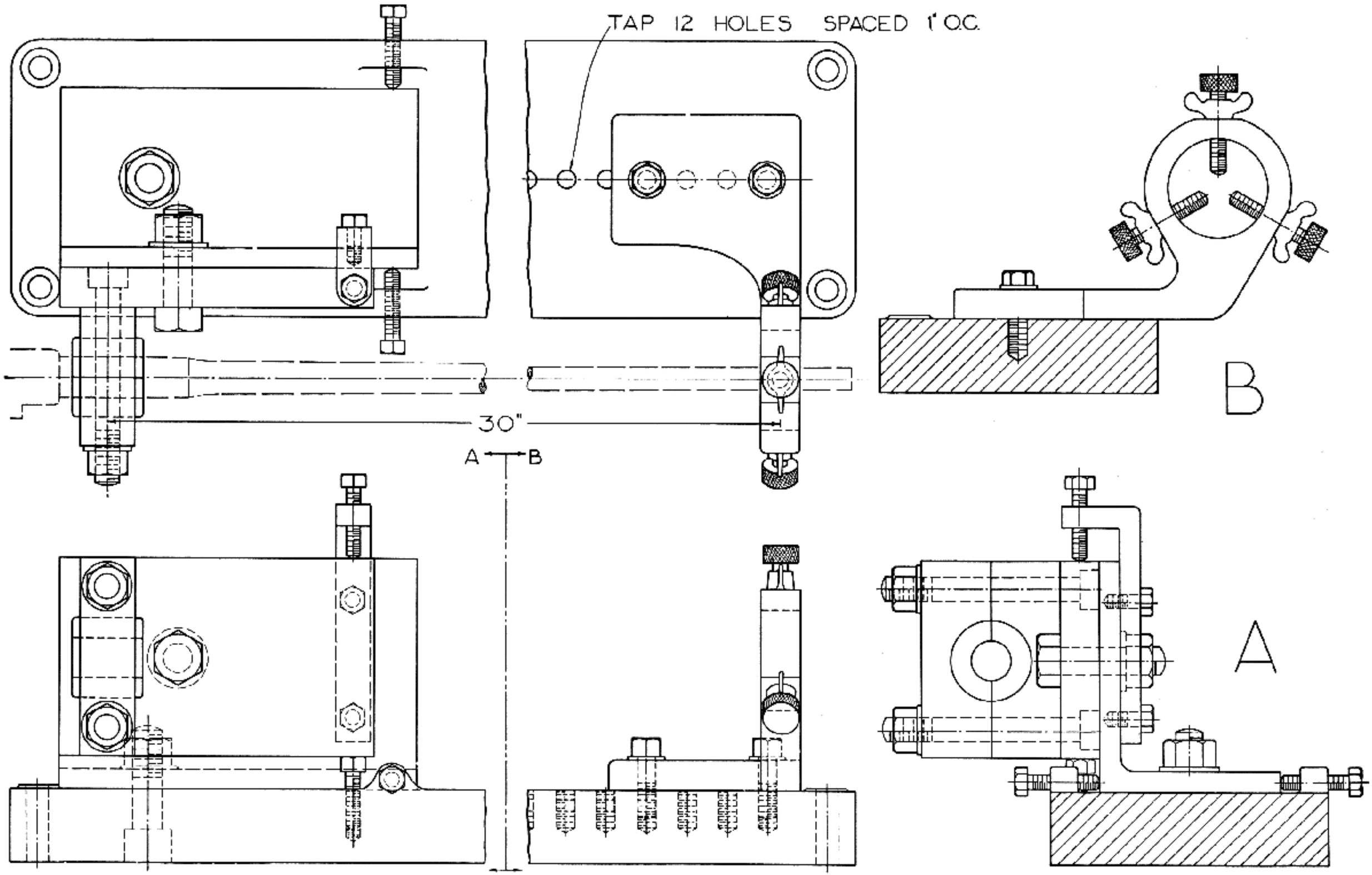

Fig. 13
Improved machine rest design for accuracy trials

vise, providing all parts are at right angles and level, to check the angle of departure of any ammunition used.

The concrete foundation should extend in length to take the longest barrel made, which is 30 inches; the shortest may be 18 inches. One set of clamping bolts must be placed in the proper position to bolt down the forward bracket, which is shown in the same illustration. The muzzle clamping bracket is of cast-iron with three adjusting thumb screws. Standard set screws may also be employed, but because a fine and light clamping effect is necessary at the muzzle of any rifle barrel, thumb screws are preferred. By drilling a series of holes in the base of the casting, the bracket can be moved to take a long or short barrel; or by placing it in the holes drilled close to the upright part, a difference of a two-inch adjustment is possible. The front bracket should be in such a position that it clamps the muzzle between two or three inches from the end of the barrel. The thumb screws should be adjusted so that they just touch the barrel, and then the thumb nuts should be locked in position so that the screws will not jar loose in the act of firing. Those who wish to construct one with a recoil cylinder to take up the recoil could have a cast-iron plate made and also a base to place all these arrangements on. The base and plate have a V-form of groove with top gibs to take up any lost motion and yet leaving it free to move when recoil takes place. A cylinder or a spring could be provided in the center to return the rest back in position after the shot is fired. This construction, however, would require a considerable sum of money.

Screw Head Polishing Fixtures — Figure 14 illustrates two methods of holding screws to a disc grinder for polishing the heads of rifle, revolver, or shotgun screws requiring true flat heads. Holding a screw with the fingers is very unsatisfactory for polishing or disc-grinding them. The square blocks shown naturally require a large number for all the different screw heads encountered in the repair of different firearms; therefore an adjustable feature is used. A small drill chuck is purchased for this type and made over to take

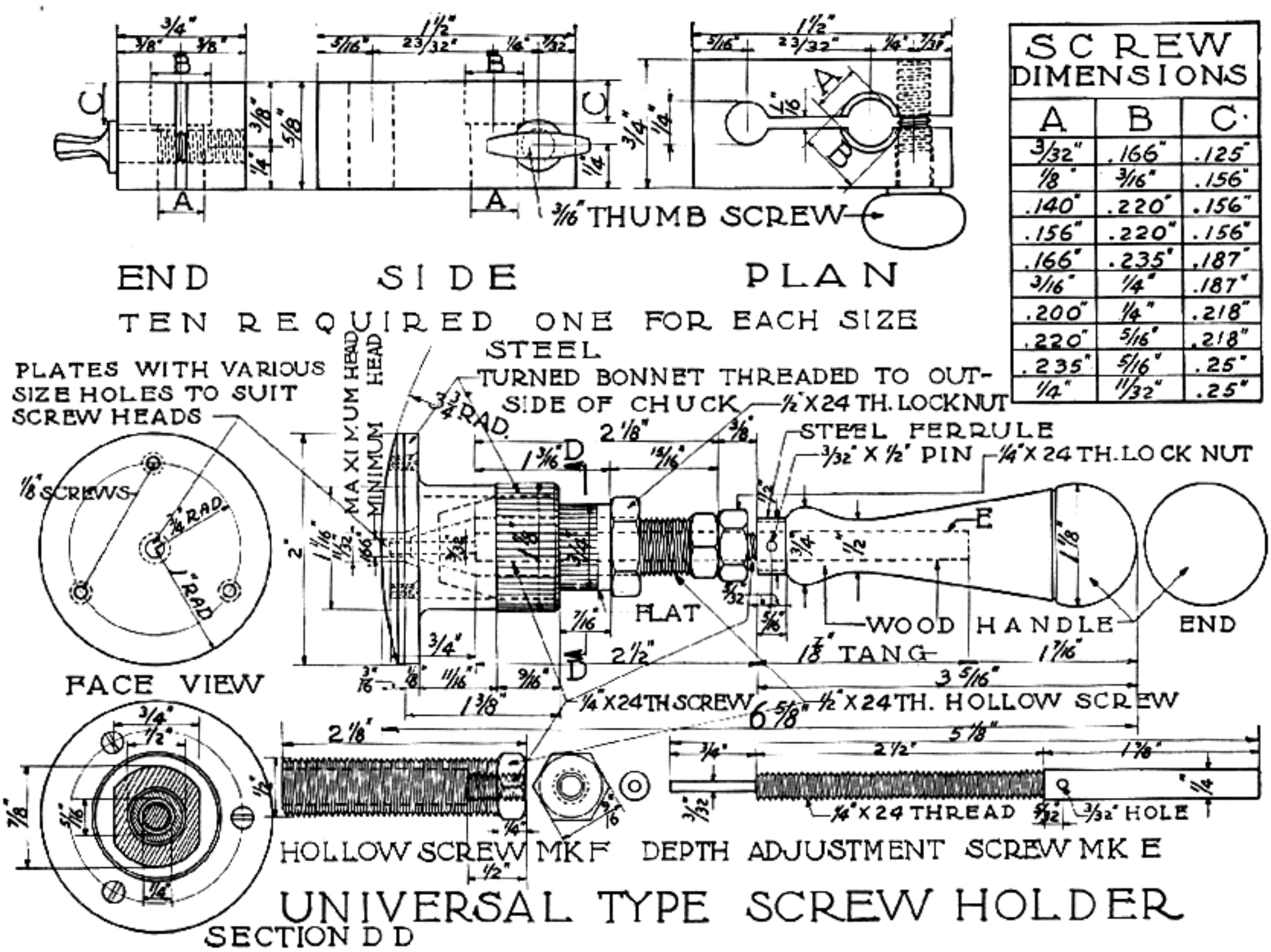

Fig. 14
Disc polishing holder for flat screw heads

any screw. The chucks cost about twenty-five cents. The two-inch bonnet is threaded to the outside of the chuck, and on the end a plate is made to take the different-sized heads encountered or as given in the table of screw dimensions. The depth-adjusting screw *E* is fastened to the wooden file handle with two locking nuts which lock the screw at the correct length; very close adjustments are possible.

The ⅝ x ¾ x 1½ inch steel blocks are a simple means of holding screws, and they can be made as needed. Close adjustments are possible with these blocks, and after all the machine operations are completed the blocks should be hardened, or they can be made from cold-drawn steel and case-hardened. If tool steel has been used the end should be drawn to a blue to insure considerable spring. A wedge should be driven in and wired in position so the blocks will not close in when hardened. Any one attempting the construction of either the blocks or the universal type of screw holder should not find difficulty in their making.

Telescope Holder — Figure 15 illustrates a holder for a spotting telescope very simple to make. The jointed rods are made from cold-drawn steel. The end of one rod is bent to hold the front of the telescope while the other is straight to fit the aluminum notched holder, and is adjusted by means of a wing nut. The notches are placed a certain distance apart, making it possible to adjust the telescope on a horizontal plane, and other targets may be seen as well as your own.

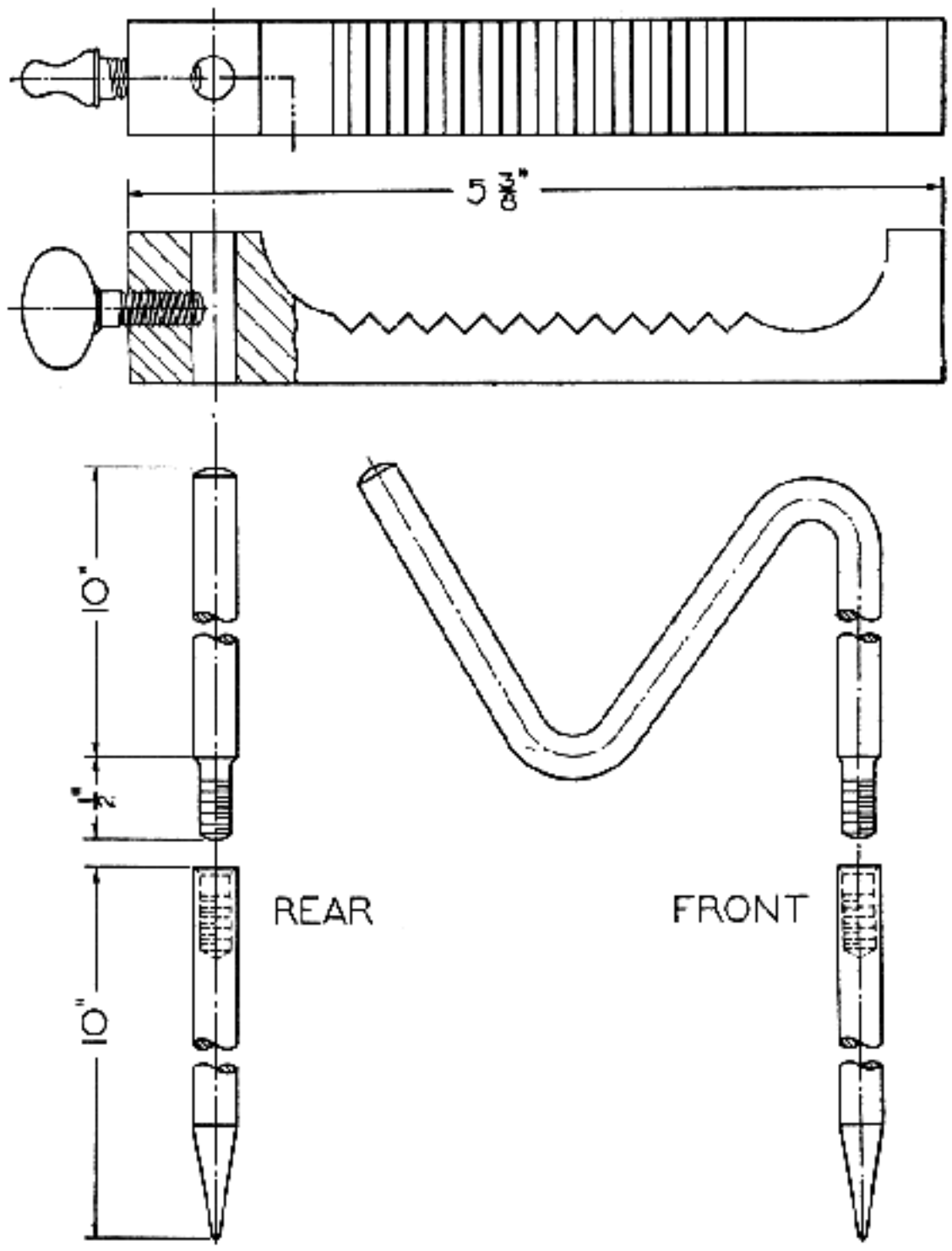

Fig. 15
Whelen spotting telescope holder: Very simple to make

This holder was gotten up in the days when we were shooting on the Frankford Arsenal rifle team. Charles Hogue, one of the members, originated the idea and I developed it. It has proved to be a good holder that can be constructed at a reasonable cost, and at the same time is one of the most compact when disassembled. After it was completed and a pattern made, it was given the name of the Whelen telescope holder, as Colonel Whelen was the organizer of the Frankford Arsenal Rifle Club at that time, and he also gave some valuable suggestions for its construction.

Bolt-bending Fixture — Figure 16 illustrates a vise block and a handle to bend the bolt handle on Springfield, Krag, or Mauser bolt-action rifles. The bending of any bolt is not advisable without a fixture of this kind. It is often necessary to bend and also grind a Springfield bolt to clear a telescope sight. The bending wrench is made from a piece of cold-drawn steel measuring ¾ x 1¼ x 12 inches and notched to fit over the tapered part of the handle. The bolt is clamped between split blocks in the vise, and a wet cloth is placed over the top, making it impossible to anneal the end of the bolt at the clamping point. Considerable heat is required, however, before it runs down to the bolt proper. An acetylene torch is necessary to heat the bolt at the desired point of bend. The bolt at that point should be heated cherry-red. When the required heat has been reached, place the notched wrench in position and bend the handle. The bend in the handle should not be short, but straight and continuous. When bending a bolt handle, the under side of the round knob is usually milled off. To do this it is necessary to anneal the knob before a milling cutter will touch it. It is never necessary to reharden the handle after these operations. It need only be highly polished again or the entire bolt reblued. Some very clever alterations have been made on bolt handles to suit some special requirements or individual ideas, but I only advise the round knob for quick handling and operation, as it fits the position of the hand best.

When using the vise blocks it will be well to turn up a special steel plug to fit into the end of the bolt so that there will be no danger of crushing in the end when pressure is exerted. Some men

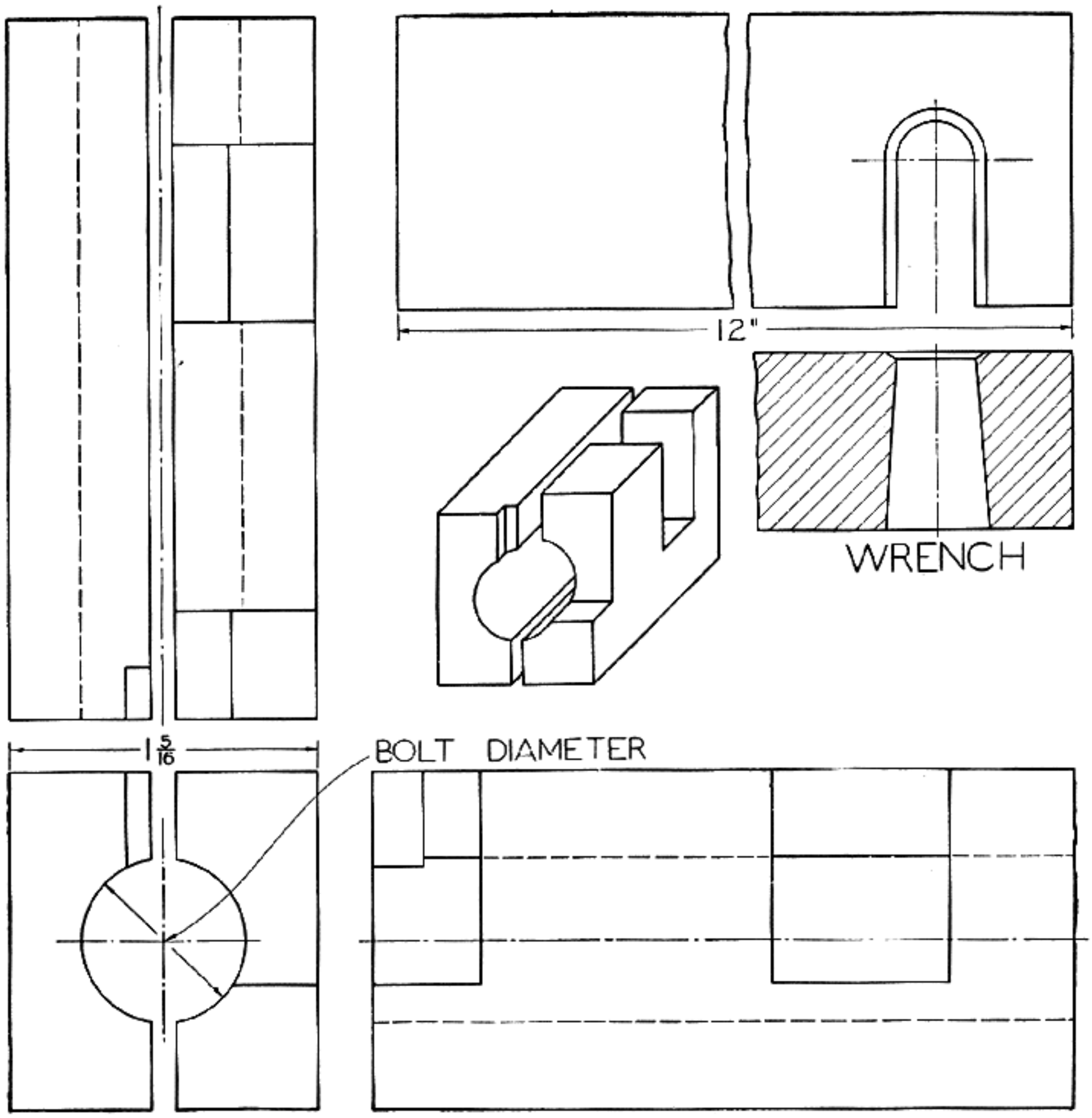

Fig. 16
Bending fixture for bolts, such as on Springfield, Krag, Mauser, Winchester Model 54, or any other bolt-action arm

use a hammer to knock over or bend it in the desired position, but it is not a good method; it only requires a short time to drill and file out a wrench for this purpose.

Bullet-drilling Fixture — Figure 17 illustrates a bullet-drilling fixture for drilling the ends of bullets in fixed ammunition, particularly the Frankford Arsenal caliber-.30, Model 1906, 172-grain boat-tail bullets or any other full-metal-patch projectiles. A similar fixture was made at one time for Colonel Whelen which proved very successful. The same fixture can be made for any other cartridges when the points of bullets are to be drilled. It may either be used in a drill press or by hand if no form of motor or drill press is available, or if one only has a small bench to work on.

Drilling into the ends of bullets has been rather disparaged in late years by different writers. Such advice is well grounded, but if one uses good judgment in drilling, he need not be alarmed. I have made extensive tests of bullets drilled with different-sized holes in the ends, measuring from 1/16 to 0.20 inch. The tests were made on a hydraulic press to see just what pressure was required to start the lead through the holes that were made in the bullets' ends. Holes between 1/16 inch and 1/8 inch took between 70 and 150 tons of pressure to start the core through the small openings made, which proves that it requires between three and six times more pressure even to start the core than the pressure developed with the explosion; therefore, if it only requires 2200 pounds to push the tightest bullet through a barrel, the margin of safety is very great and to obtain the desired results upon game, a drilled pointed bullet of the

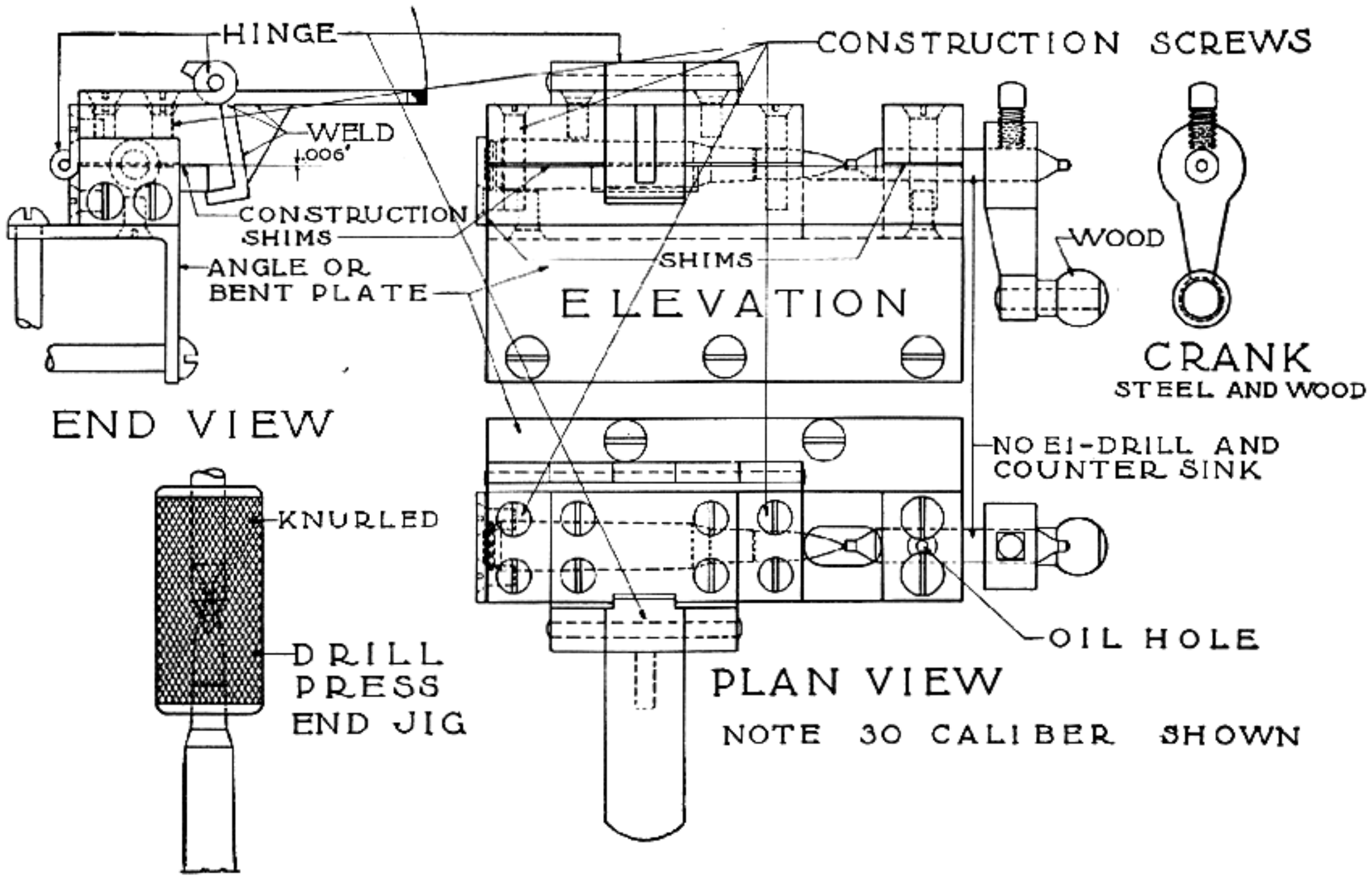

Fig. 17
Drilling fixture and drilling jig to drill points of bullets in fixed ammunition such as the caliber .30 Model 1906 or any other types of ammunition

Frankford Arsenal make, particularly the new boat-tailed ammunition, will give the results always looked forward to in the game field. I not only use these myself, but recommend them to others; it has been proved that it is the only practical ammunition to use.

The ideal diameter of hole drilled in a bullet for quick killing effects is between $\frac{3}{32}$ inch and $\frac{1}{8}$ inch to a depth of $\frac{3}{16}$ inch in the end. Use a combination center drill and allow the countersink of the 60-degree angle to open up the end; which proves a better means of expanding the bullet as it strikes an animal. There are so many conflicting reports of the effects of bullets upon animals that it is difficult to accept any except from those who have conducted various experiments with all kinds of ammunition, proving without a doubt what one particular kind of ammunition will do and then extending experiments to the drilled-pointed bullets to prove even superior results with a well-defined combination to carry ammunition which will drop any animal in its tracks instantly.

The illustration of the bullet-drilling fixture is favorably shown so that any one can proceed to make one with only the parts as they are drawn, and I do not believe that any further information is necessary. This is one device that every one should have, especially those who do very much hunting and need ammunition which can be depended upon. Some of the following suggestions may be of benefit to those wishing to make one of these fixtures. A pattern is made and the entire part fashioned from an aluminum casting. A standard chambering reamer is used to ream out for the cartridge case to a depth where the bottom of the case will come flush with the bottom. Allow the bottom plate to fall in place, and when it is possible, apply a little pressure on the thumb screw to keep the cartridge in position while drilling takes place. If it is made for hand drilling, a bracket may be combined with the body so that it can be screwed to the side of a bench, table, or even a convenient upright so that it is possible to turn the crank and exert enough pressure to drill the hole. Drilling the ends in a drill press or with a small motor would be a very simple operation compared with the use of the hand drill, but the hand fixture is very welcome as long as holes can be placed in the end of a bullet to render the desired results.

CHAPTER III

Tools and Methods of Tool Making

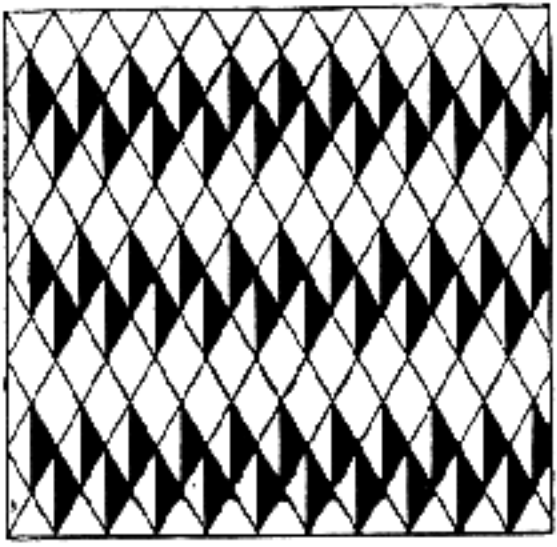

CHAPTER III

Tools and Methods of Tool Making

BEHIND the development of firearms—in recent times a constant evolution—stands the tool maker. Hand tools were made first, and then with the building of various labor-saving machines came the creation of tools necessary to go with them; for this reason a higher refinement traveled with that evolution until today we carry out some very precise measurements to make tools perform to a given standard set by natural law and understanding. The gradual development of machine tools and methods of manufacture brought an eager increase in the required accuracy and refinement of workmanship. The demand upon a tool maker is for more precise methods and greater skill. Today, therefore, the large body of tool makers represents the most skilled, the most inventive and the most intelligent element in the army of the mechanical trades; their work forms the great backbone of our immense industries.

The fundamental requirement of a tool maker in rifle work is *accuracy* in all vital measurements. The introduction of high-speed steels many years ago demanded greater skill in the construction of the tools and the correct heat treatments, simply because the pressing demand for higher velocity in rifles and the hardness of steels used in their construction necessitated cutting tools which would maintain their cutting edges. The design of efficient and complete sets of barrel tools requires a highly developed knowledge of various machine methods and a thorough understanding of the machines for which such tools are made.

It is usually understood that a tool maker is a machinist who has developed greater knowledge of his trade than is merely sufficient. Many a tool maker should still be a machinist and many a machinist should do his best to advance to that higher plane of mechanics where he may make such tools, gauges, or gun parts as will decide the accuracy of a firearm.

The man advancing in general knowledge of this subject should be familiar with the accurate reading of all measuring instruments such as the micrometer, vernier (as applied to the vernier caliper), vernier depth gauge, and vernier height gauge. He must not take anything for granted when accurate measurements are necessary. A barrel reamer should always cut to an exact size, but experience has proved that invariably it does not do so when first made. It must be stoned and regulated until the gauge or micrometer size is secured. While extreme care should be exercised when accuracy is essential, there are parts of many tools in gun work where approximate measurements will suffice. If within 0.010 inch is sufficiently exact, then it is folly to spend long hours to get a size within a limit of the 0.0001 of an inch which is often seen upon arsenal drawings.

Approximate measurements are those made with the aid of calipers, dividers, surface gauges, etc., set to a steel scale. Precision measurements are obtained by the aid of the various measuring instruments graduated to read very small fractions of an inch or millimeter; also by the use of Johansson reference gauges and standard test bars which are often accurate within a limit variation of 0.000008 of an inch. In using the micrometer, the vernier, or any of the instruments which should give accurate readings, it is necessary to use the greatest care in setting the tools—above all, the vernier. In setting the latter, a powerful magnifying glass should be used so that no error will be made. In the use of the micrometer a touch should be developed much finer than the ratchet stop is capable of.

Necessary Instruments — If the interested reader will secure two catalogs of tools sent to any address for the asking—the Brown & Sharpe and the L. S. Starrett books of machinist tools—he can pick out the tools as they are named. The vernier height gauge is a very useful instrument for laying out templets, setting sine bars, checking various steps in various-form gauges by the use of Johansson blocks and other tools requiring very accurate height measurements, and for locating working points, holes, etc. The fixed base is of sufficient thickness to allow the gauge to stand upright. An extension attached to the movable jaw can be used to scribe lines when laying out measurements. In the absence of a height gauge, the regular vernier caliper may be made to answer the same purpose by making a base which may be attached to the fixed jaw. The vernier caliper is a very useful tool for taking length measurements; one of nine or of

twelve inches is the most convenient to use. The vernier depth gauge and micrometer depth gauge are two very useful tools to secure depth measurements in recesses, flanges, etc. Either one of these instruments is a matter of choice among tool makers, but the vernier depth gauge is the one usually preferred.

Micrometers — These measuring instruments are well known and do not require any introduction. The 1-inch size is the most used; therefore, two should be included in all tool makers' kits; one with a vernier reading to 0.0001 inch to be used for precise measurements and the other just a plain instrument reading to 0.001 to be continually used for all rough measurements. A lapping block should be provided for lapping the spindle, as illustrated in Figure 18. These must be made as they cannot, to my knowledge, be purchased. The lapping block is made from cast-iron with two small knurled handles, and the face of the blocks is charged with diamond dust prepared as explained

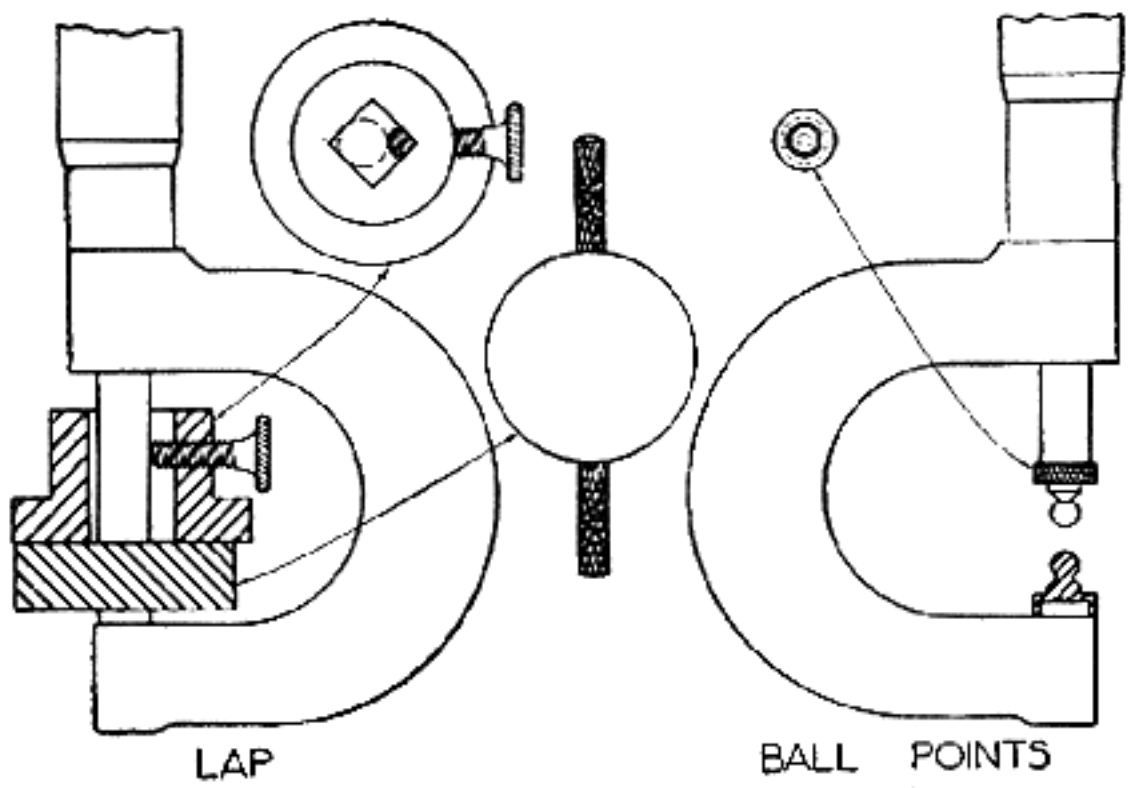

Fig. 18
Micrometer ball points, lapping fixture for spindle, and anvil of same. Ball points are for the purpose of taking measurements on rounded surfaces

in Chapter IV, Volume I. The spindle face plate is made from tool steel, hardened and accurately ground. A square hole is filed or broached in the center and a small thumb screw is set in the center opposite a V. After the hardening of the plate it is clamped on an accurately ground arbor by the thumb screw and the face ground with the edge of the wheel on a cylindrical grinder, and then the face of the plate is lapped to remove all grinder marks.

Bevel Protractor — This instrument is in almost constant use by the tool maker working on rifle or cartridge tools; therefore, the best should be procured with the vernier scales to read minutes of angles. These instruments are very accurate, finely made, and capable of checking any angle; or they can be set for any angle as it is turned or ground on a machine.

V-Blocks — A pair of accurately hardened and ground V-blocks is a necessary part of every tool maker's kit. The best will be the ones made by yourself, as Figure 19 illustrates. Naturally, you can procure a very accurate pair from Brown & Sharpe, but the ones made by yourself will be the more highly prized. They are first machined from

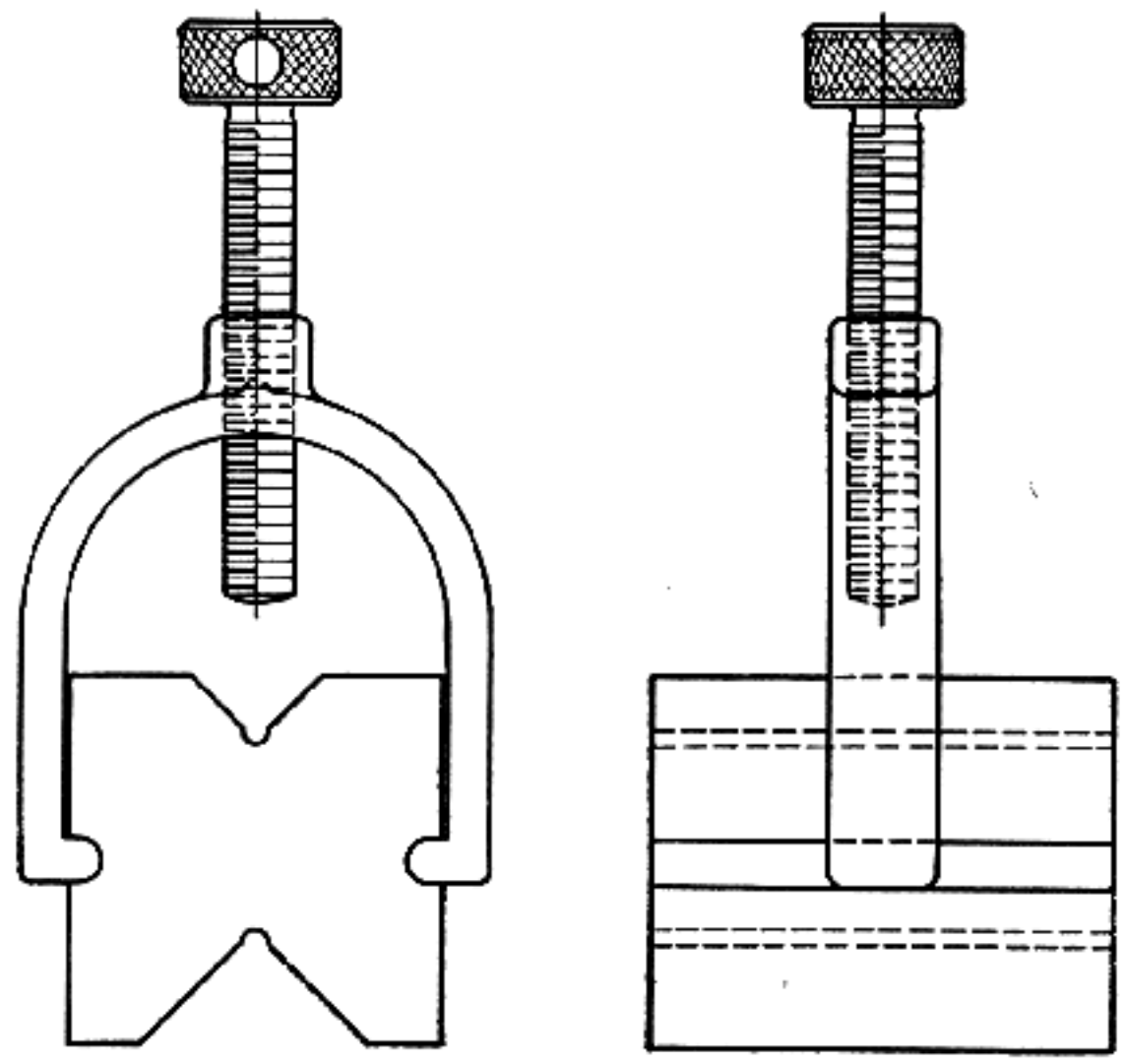

Fig. 19
V-Blocks and clamp

tool steel which consists of milling machine operations and then they are hardened and seasoned. Refer to Chapter VII for this information and then accurately grind all over on a surface grinder by grinding both together. Both are alike, and after they are ground the grinder marks are removed by lapping on a lead lap. A clamp is also made as illustrated to hold work to drill or to be laid out; oftentimes two are required, but one usually serves the purpose.

Cube — A cube block often becomes one of the most essential tools in gauge work. Figure 20 illustrates one with two plugs used as a sine bar. This tool cannot be purchased; making it requires a considerable length of time. The material used is an oil hardening steel, hardened and seasoned and accurately ground all over. Even the holes which hold the sine plugs are internally ground; therefore, the closest precision work is done to make it as perfect as possible. Holes are drilled and tapped for ¼-inch standard screws on all sides to

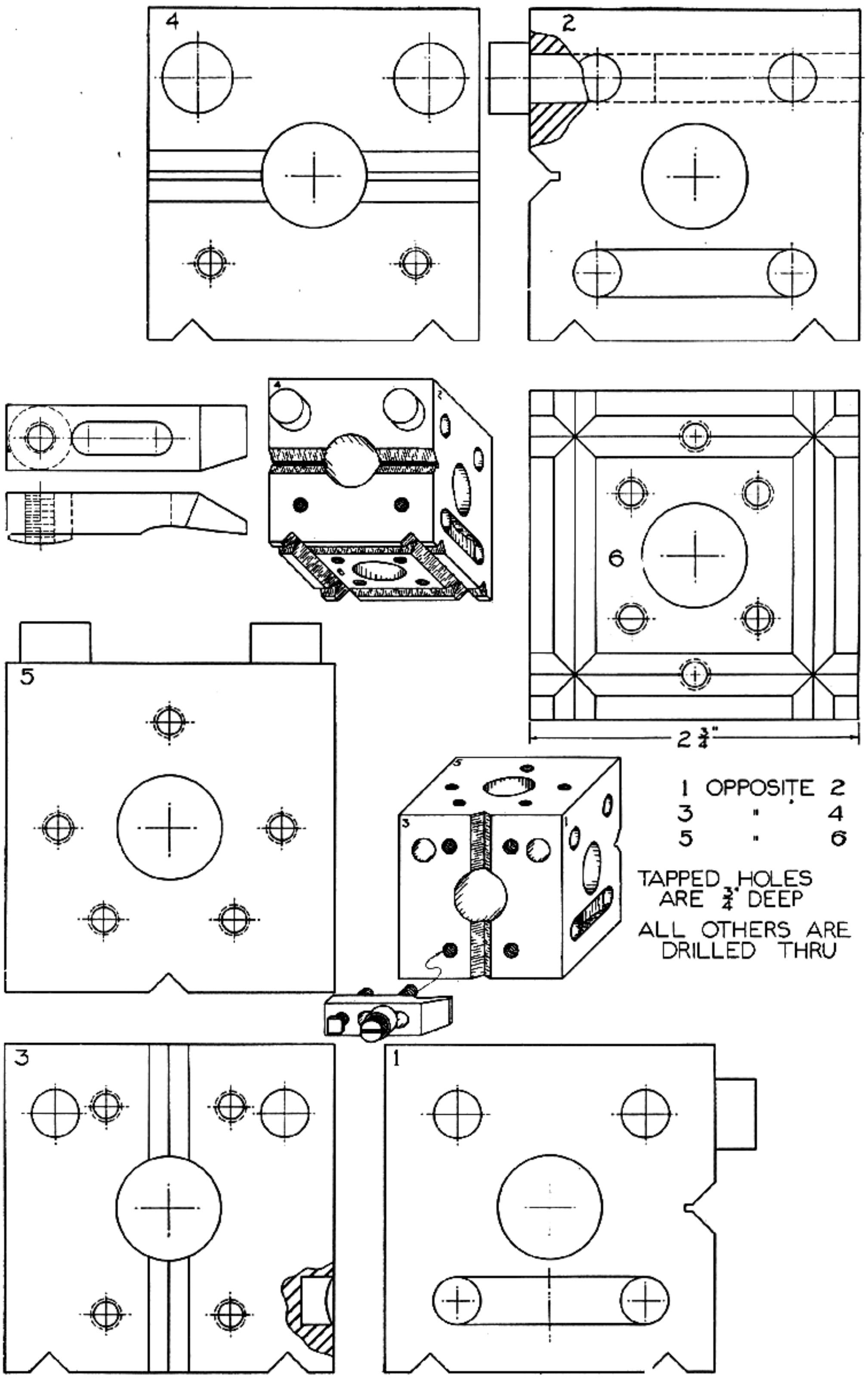

Fig. 20
Cube—an essential tool for laying-out work and making tools for the gun shop

hold the work clamped in various positions. The small shallow vee's which are milled on the bottom are to place cylindrical plugs of the correct diameter in order to secure different angles with the sine plugs. Clamps are also made to hold parts on the surface of the cube, as are shown in the illustration.

Center Gauge — The center gauges sold by the leading tool manufacturers are perfectly satisfactory where accuracy is not important, but for the very close accurate setting of the threading tools we must have instruments that can be set between lathe centers with accurately ground angles; when these discs are placed against the angle of a thread tool, they are known to be on perfect center. Figure 21 illustrates this tool, which can be made in one's spare time, particularly when much thread chasing is anticipated. The thread tools can be set up on the cube and very accurately ground; consequently, extremely accurate threads can be cut with such combinations.

chuck can be done very rapidly in comparison with a lathe test indicator.

Test Indicator — Naturally, a test bar will call for an indicator, but since there is such a large variety to choose from, it is sometimes difficult to choose the best. I would advise an Ideal indicator, which is, incidentally, the most inexpensive.

Die-maker's Square — Many die makers and tool makers use an adjustable square having three different blades. The narrow blade is used to pass through an aperture in a die. The amount of clearance given to a die is determined by judgment of what the die produces and the nature of the material. These squares are used very much in all types of work.

Knife-edge Straight-edge — A straight-edge is a necessary part of any tool maker's kit, and particularly the knife-edge type. Many tool makers have several, varying in length from one to seven

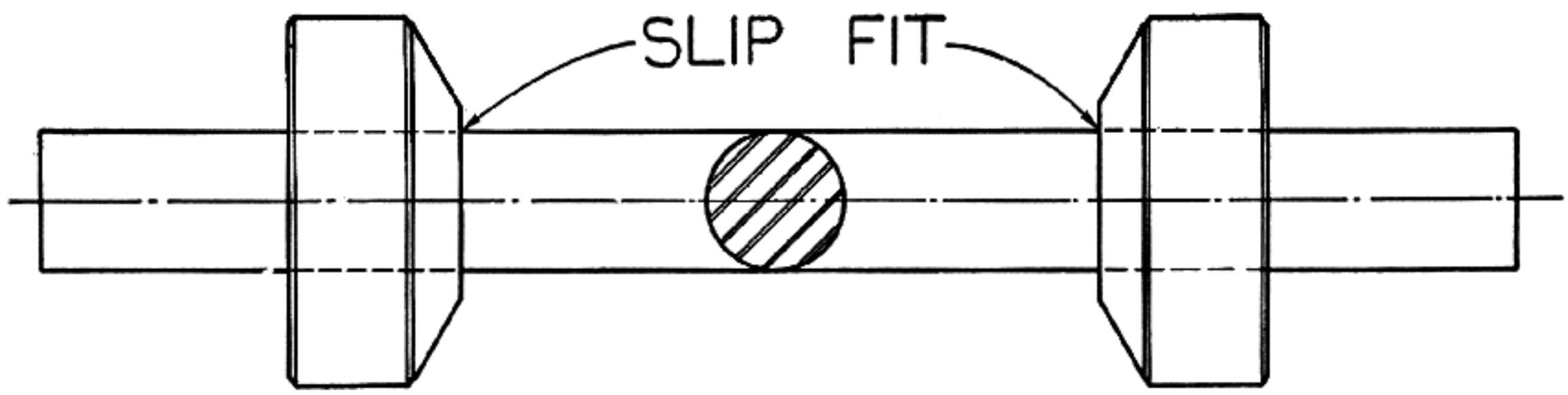

Fig. 21
Thread center gauge: an essential tool for cutting accurate screw threads

Center Test Bar — Figure 22 illustrates a center test bar far superior to the lathe test indicator shown in the tool catalogues. After the bar is hardened it is rough ground and seasoned, and then finished ground. A test indicator is used in connection with one of these bars and the setting of any work whether on the face plate or in the

inches, or even longer. Straight-edges should be kept in a case so that their edges will not become marred. Figure 23 illustrates two straight-edges; one is made from square high-carbon steel and one from a razor blade. The latter makes one of the best known. The former straight-edge is machined, accurately ground, and lapped after being thor-

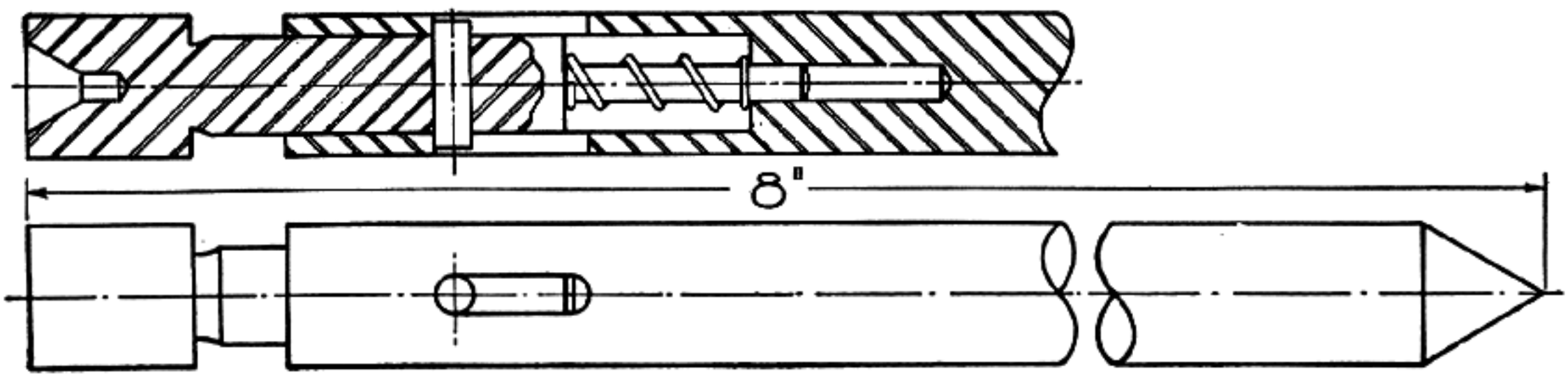

Fig. 22
Center test gauge: Used to true work on a lathe. The back end is held by the dead center while the pointed end is placed in a center punch mark and the work trued with a sensitive indicator

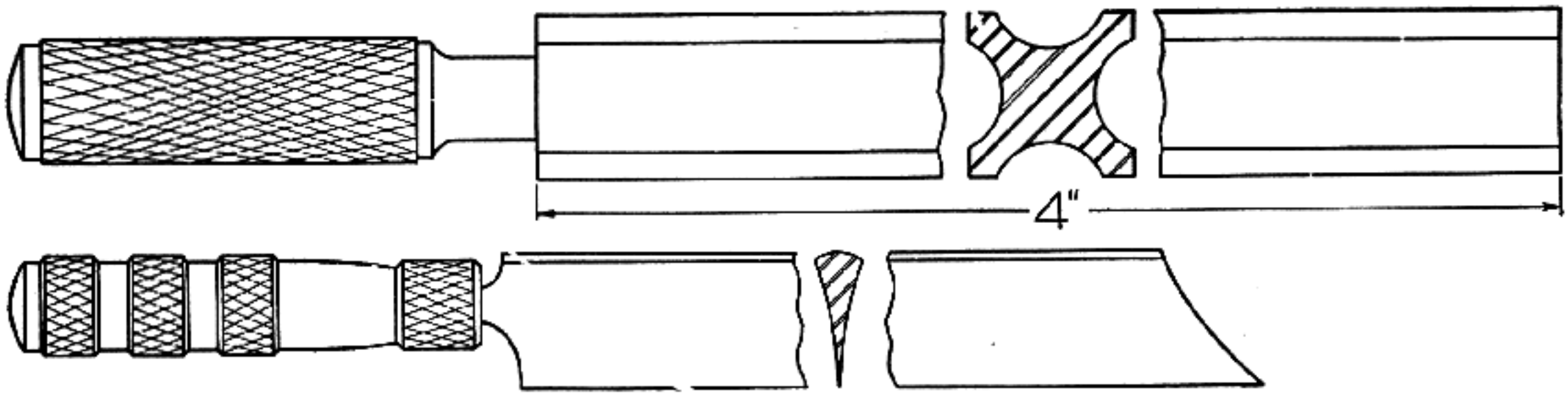

Fig. 23
Knife-edge straight-edges used to check flat surfaces

oughly seasoned. The flat surface should be lapped by hand by following the instructions given in Chapter IV, Volume I. It will be necessary to finish by oilstoning with a fine Arkansas stone to remove any high places that are not removed by lapping. To check straight-edges test on a master straight-edge either of steel or glass.

An endless list of tools and instruments could be given here, but since I have named the foregoing tools I shall assume that the reader has sufficient knowledge of mechanics to enable him to go even farther than I have gone. Remember that it often pays to create your own tools, making some just a little different from those you see in catalogs. They are easy to copy, but try to avoid duplicating tools you see in circulars. Be original in your design and just prove how possible it is to have something better and far more efficient than those that can be procured by money.

One more point to remember is that a tool maker should always have at hand a small bottle of blue vitriol or coppering solution to color the surface on which lines are to be laid out, etc. Chapter XVI contains these formulas. The coppering solution produces a copper-colored surface when applied to polished steel which is free from grease and dirt.

The subjects of steels, their proportions, annealing, hardening, and tempering, have been treated in separate chapters and have been presented to the reader in a way which might seem rather difficult to fathom except for one directly in contact with the treatment of steel. Tool steel is used for tools intended for working metals in gun work or any other hard materials. The tool maker should have a thorough understanding of the different metals and a knowledge of some of their peculiarities in order to work them successfully.

Carbon is the element in tool steel that makes possible hardening it by heating to a red heat and plunging into a cooling bath. A bar of tool steel from the rolling mill or even the forge shop is somewhat decarbonized on its outer surface, and in certain steels to a considerable depth; therefore, this portion may not harden, the results being far from satisfactory. For this reason, if a tool is to have cutting teeth on its outer surface, such as chambering reamers and other barrel tools, it is necessary to select stock of a larger diameter than the finished size of the tool so that this decarbonized portion may be removed. About $\frac{1}{16}$ inch additional is usually allowed on stock measuring $\frac{1}{2}$ inch or less; $\frac{1}{8}$ inch for sizes up to $1\frac{1}{2}$ inches; for over this diameter $\frac{1}{4}$ inch will be sufficient.

Tool steel may be procured in almost any form or quality; do not rely upon all the information which catalogs contain, but use some certain steel best adapted to your particular needs. Tests should first be conducted to determine the steels best for your purpose; the cooperation of the steel companies should be secured to help solve your problems.

Both high-carbon and low-carbon steel-cutting tools should be made from a high-carbon steel if the metal is to be forged or hardened by an experienced tool maker. But if the steel is to be heated by an inexperienced man it is not safe to select a steel having a high percentage of carbon. For non-cutting tools, of which there are many in gun work, a low-carbon steel having one per cent carbon or less is preferable, because with this steel there is not so great a tendency to spring in the hardening. In many such cases it is advisable to select alloy steels hardened in oil, and there will be less chance of cracking the tools thus made.

Hammered steel is prized more highly than rolled steel for rifle or shotgun work, but many authorities will not agree with me on this point. It is usually conceded, however, that the best tools can be made from forgings if the heating and hammering have been correctly done. The steel should be heated uniformly throughout and hammered carefully with heavy blows at first. Lighter blows should follow, and when the piece passes from low red to black, extreme care should be used to avoid crushing the grain. Steel properly heated and hammered has a close fine grain.

It is advisable, when cutting a piece of tool steel from the bar, to use a cutting tool such as a saw. It is considered poor practise to weaken the bar with a cold chisel and then break it by a sudden blow. This so disarranges the particles of steel that they do not resume their proper relations with one another when hardened. If it is necessary to cut the steel with a chisel, it is best to heat the bar to a red heat; in this condition the steel may be cut off without injury.

A piece of tool steel that is to be hardened should never be straightened when cold, as it is almost sure to spring when hardened. If it is bent too much to remove all the decarbonized steel when being turned to size, it is best to use another piece of stock; but if the bent piece must be used, heat it to a red heat and straighten.

In order that tool steel may be soft enough to work easily it must be annealed. Steel can usually be purchased annealed much more cheaply than it can be annealed afterwards. Annealing or normalizing removes the strains or the tendency of the steel to crack and spring when hardened. Strains are caused by rolling and hammering in the steel mill or forge shop. To remove the tendency to spring, the piece of steel should be machined somewhere near to size, sufficient stock being left to machine all over after the normalizing operation. See Chapter VII.

The use of high-speed steels for cutting tools has not only revolutionized machine-shop methods, but rifle work as well. The results obtained from the use of high-speed tools in rifle work are dependent in a very large measure on the way in which the tools are made and used. As they are principally valuable for barrel drills, reamers, etc., and also for roughing purposes, it is apparent that they should be made strong and of such shape as to secure the greatest efficiency possible, the hardening to be done in proper furnaces. Burnishing reamers are prized more highly when made from high-speed steel and also other tools of this nature. Many authorities do not agree upon this point, probably because they have only examined tools made through the regular process of manufacture, but if a high-speed cutting tool is given the correct heat treatment and ground and lapped to size or even stoned it will outlast other tools four to one.

Standard Tools — The tool maker is often called upon to make some very odd tools, so he should be prepared to adjust himself to any emergencies which may arise. Special drills are often requested for a form of work where a twist drill would not answer the purpose. For certain classes of work the single-lip drill becomes very useful; it has but one cutting edge and its action is similar to that of a boring tool as used in a lathe. Before this drill is used a smaller hole is made and the body of the drill, being the size of the hole drilled, insures the cutting of a straight hole, even in drilling work which has been partly cut away. This form of drill does not cut as rapidly as the standard forms and consequently is not used where a twist drill would do satisfactory work. There are many suggestions which could be given in making different drills, but since drills of the twist variety are so reasonable it does not pay to construct your own except for a straight hole.

Taps — The taps measuring ¼ inch in diameter and smaller are as a rule made with vee threads whose sides form an included angle of 60 degrees or with round top and bottom threads. Taps larger than ¼ inch are made with the United States standard form of thread which has an included angle of thread of 60 degrees the same as the V form, but with one-eighth of the altitude removed from the top and one-eighth filled in at the bottom. The V-shaped thread taps are made in various pitches for each different size but the United States standard has a definite pitch for each diameter.

Taps measuring ¼ inch in diameter or smaller are best cut on a Pratt & Whitney bench lathe with a screw-cutting attachment. They can also be cut on any screw-cutting lathe, but better results are obtained on the small precision lathe. If a number of taps are to be made they are best cut with screw dies made similar to a hollow mill. This operation is best done on a screw machine but a lathe can also be employed when a die holder is used, allowing the die to feed upon the blank of its own accord. The method used for gauging the correct size varies in different shops. Some use a thread micrometer while others use the three-wire system of measurement; but for taps of the same size, such as gun taps, a sizing die is used to give the thread the correct size. The threads are cut to within 0.004 inch with the hollow screw die and finished with a sizing die of the same form.

Taps for general use around the shop are often made in sets of three. The first tap to enter the hole is called the "taper tap" because of the long chamfering or taper. The second is known as the "plug tap," which has the first two or three end threads chamfered and is used when the screw is to go nearly to the bottom of the tapped hole. The "bottoming tap" is used when the thread is to go to the bottom of the hole; the end of this tap is not chamfered.

Hand taps are intended for tapping holes by

hand and are usually made in sets of three as previously explained. After being normalized the shank should be turned to size and the square end milled for a tap wrench. The body is then turned to size and the thread cut. Before turning any of the parts to size or starting to cut the thread, be sure that the centers of the lathe are in good condition—the live center should run true. The dead center should also be ground to the correct angle and in good shape. It is advisable to grind the thread tool on the cube set-up to an angle of 30 degrees; first grind one side and then the other, making allowance for the proper clearance. There are various forms of thread-cutting tools, but the standard $\frac{5}{16}$-inch Armstrong tool holder (using a $\frac{5}{16}$-inch high-speed tool bit) is as good as any I have found in practise. Instead of having the point of the threading tool come out straight, a slight downward incline is stoned to the point. This simple stoning operation imparts greater strength to the point, and, besides, gives a perfect finish to the threads as tho goose-neck tools were employed. The cutting point of the tools should be on the exact center and the tool set to the proper angle by the center gauge described in the first part of the chapter. The dial should be employed on the cross feed when cutting threads, and only a 0.001 to 0.002 inch cut taken on each setting. A cross-feed screw-cutting stock is also a very handy part to become accustomed to using in screw cutting when any adjustments take place. Reference should be made to the graduation on the cross-feed dial.

After the thread is cut to size and the ends chamfered, the tap is ready to be fluted or grooved in the milling machine. The tap is held between centers and the flutes cut with a cutter especially adpated to the size and style of tap. While the grooves are best cut with a milling-machine cutter, it is possible to cut them in a shaper, using a tool of the correct form. Great care should be taken not to stretch the thread by a heavy cut or by using a dull tool.

The grooves cut in taps are ordinarily termed flutes the same as in reamers. A tap that is to run through the work without backing-out can have a flute of a different shape from one that is to tap a deep hole in a piece of steel where it is necessary to reverse the motion of the tap every two or three revolutions to break the chip and also to allow the lubricant to reach the cutting lips.

While all taps up to and including those which tap a receiver are usually given four or more straight flutes, special flutes are sometimes desirable, especially with small taps in gun work. With spiral flutes, it is generally necessary to cut a smaller number than with straight flutes, and since special taps are not often ground after hardening, there is no objection to giving an odd number of flutes as in the case of a barrel reamer in which three spiral flutes are often cut. A large number of small special-thread taps are used for firearms, but the three straight-fluted taps are the ones mostly used.

When taps are used to tap tubing having thin walls, the tubing between the lands has a tendency to close into the flutes of a tap and is liable to break the tubing or the tap. In such a case there should be double the number of flutes in order to provide enough lands to hold the tubing in shape. For general gunshop work, however, three or five flutes work best in hand taps up to and including those made for receivers for larger sizes of a special nature, and for which I would advocate more. Naturally, the class of work and the material used in the individual shop will determine this.

Steel used for making taps should be of the highest grade, as recommended by steel manufacturers for this purpose. To insure removal of the decarbonized surface of the metal, stock should be selected of a diameter not less than $\frac{1}{16}$ inch larger than the diameter of the tap. When cutting some steels used for taps it is necessary to give them a "board anneal." This process consists of heating the blank to a low red, holding it in a dark place until the color leaves the steel and then placing it between two thin boards. After it burns itself into the wood a short distance it is plunged into a bath of soapy water. Oil may be used, but soapy water is preferred because the finished threads are not so inclined to tear when the threading tool is finishing the last cuts. The making of taps is a higher grade of work than ordinary thread-cutting and special care will be required for it. Good lard oil should be used and the finishing cuts should be just scraping cuts.

The most commonly used form of flute is that which is cut with a convex milling cutter for milling half circles. The advantage of such a flute is that it has a greater chip clearance and a strength which leaves the lands strong. After cutting the flutes, the lands should be backed-off to give the tap cutting edges and a leed, which is usually done with a file. Commence at the heel of the land, file the top of the land and gradually approach the cutting edge, making sure that no stock is removed at that portion. Simply bring it to a sharp edge. The size and number of threads per inch should be stamped on the shank of the tap before the hardening operation.

Taps can be stoned for the leed as well as backing-off the teeth similar to the way a reamer

is stoned. By using this method there is no danger of removing too much metal as with a file, particularly in the hands of an inexperienced person.

Hardening — It is advisable to coat the teeth of a tap with boneblack and heat them gradually in a tube away from the direct action of the flame, or in a lead bath. They should be plunged into a cooling bath a little above the threads and worked up and down and around in the bath to prevent soft spots. For taps less than ¼ inch in diameter, an acid bath will be found very satisfactory, and for larger taps, strong brine is advisable.

The flutes of taps should be ground with an emery wheel of the proper shape in order to brighten the surface so that the color will be readily seen when drawing the temper. Grinding also sharpens the cutting edges and breaks the burrs that have been thrown between the teeth when cutting the flutes. The temper should be drawn to a full straw color. Much more satisfactory results may be obtained by heating the taps in an oil bath and drawing the temper to a point from 475 to 510 degrees Fahrenheit, according to the size of the tap and the nature of the material. The shanks of all small taps should be drawn to a blue up to the thread portions.

Threading Dies — The tool maker is often called upon to make round or square threading dies for special screws in gun work. The round button die is mostly employed on such work and the general principles of constructing a threading die of the button type are very much the same as of other dies in this class. The blank is first turned and drilled in a lathe to the double depth of the intended thread, and because of the small size of most of these dies, taps must be used to thread the holes; but when they are of a sufficient size they should be first chased out with an inside threading tool and then a tap used to give the thread the finish and also the proper size. Whenever possible, use an inside threading tool to first cut the threads, and good lard oil as a lubricant. The finishing cuts should be very light and the threading tool for this purpose should be in the best possible condition. When a tap of the right size is available, it would be well to take the finishing cut with this tap; but as the pitch of taps is sometimes slightly altered in the hardening process, the thread must not be cut too near the finished size of the thread tool; in that way fewer tool marks will be seen after the hole has been tapped. Before taking the die out of the chuck the hole should be chamfered back a distance equal to about one-fourth the thickness of the die. The larger diameter of the chamfer should be slightly greater than the diameter of the screw. It is understood that the object of chamfering the die is to facilitate starting the thread on the screw.

After cutting the thread the next operation is to drill the clearance holes. For small dies three holes are usually employed, and these are laid out so that the least bearing is given to the threads; at the same time strength should be taken into consideration. First, a small hole is drilled and enlarged with a counterbore which may be done in a drill press. After finishing this work, the die is ready to be filed. For general purposes, the back of the cutting edge is given clearance by filing up to the cutting edge. Great care is required in this work to keep the file from cutting the extreme points of the teeth at the advanced edge. The filing should be started at the heel and barely brought up to the edge without touching it. At times it is well to file or "back-off" the heel beyond the chamfered part; that is, through the full length or thickness of the die; then it is hardened and tempered.

While round dies for cutting screws may be made solid for roughing out a thread that is to be finished by another die, the finished die should be made adjustable. When making adjustable dies, the usual instructions given for solid dies may be followed, except that some provision must be made for adjustment. This is done by splitting it at one side; the hole for a small adjusting screw, however, should first be drilled and tapped. To prevent the die from springing out of shape in hardening, it is advisable to cut the slot from the center of the die, holding a thin margin of metal. After the die is hardened this may be ground out with a bevel emery wheel. Often this bevel is used for the adjustment with a screw in the die holder.

Counterbores — These tools are used for enlarging a hole without changing its relative position. For an emergency job and for a small number of holes it is advisable to make as cheap a form as is consistent with the work to be done. Probably the cheapest counterbore that will do satisfactory work is the one with two lips. This can be forged so as to require but little machine work. After forging, it is turned to size, and the necking between the pilot and body should be cut with a tool having the corners slightly rounded to decrease the liability of cracking when the counterbore is hardened. The flat sides of the body may be finish-filed; the edges should be draw-filed and more stock removed on the back than on the cutting edges for clearance. The pilot and body should be hard the entire length or they will wear and become rough so that they cannot cut a smooth hole. Draw the temper to a

full straw color. Unless intended for accurate work, the tool need not be ground.

Permanent counterbores are usually made with four cutting edges as seen in tool catalogs. Counterbores for screw holes are usually made in sets of three: one for the head of the screw with pilot of body size, one for the head with pilot of tap-drill size, and one to enlarge a tap-drill hole to body size.

The following instructions apply to counterbores with either straight or taper shanks. When turning to size, take stock somewhat larger than the finished size of the counterbore. Turn a roughing chip or cut all over the blank, and turn the neck portion between the shank and body to size and stamp the size of counterbore and pilot. Turn shank, body, and pilot 0.015 inch over finish sizes to allow for grinding. In the case of a tapered-shank counterbore, the tenon should be milled.

After the lathe work is finished the counterbore is ready to have the flutes milled to form the cutting edges. One method is to cut them with a right-hand spiral of from 10 to 15 degrees; the other is to cut the flutes straight. The former has the effect of running the chips back from the cutting edges and works very well on all classes of steel used in gun work, while the latter method is considered more satisfactory for brass and cast-iron, altho it also works well in steel. The cutting edges are given clearance by filing. If the counterbore is to be used for brass it is necessary to give clearance to the lands also.

When centering counterbores or any tools whose centers are not to be used after the tool is finished, the combination center drill should be small and the countersinking no larger than deemed necessary for good results in machining. Figure 24 shows a combination drill and countersink. If large centers should, by accident, be set in the ends, the one on the end to be hardened should be filled with fire clay moistened with water to the consistency of dough, or with graphite mixed with oil; this prevents steam from forming in the hole and cracking the tool when dipped in the bath. If the piece is to be heated in a lead bath, the filling should be dried thoroughly before immersion.

Fig. 24
Drill and countersink combined

A very satisfactory way to mill a counterbore having a spiral is with a vertical attachment on the milling machine. This method also may be used for reamers and taps. Having geared the index head up to the required spiral, and with the blank between centers, the vertical head is set on a 15-degree angle to the left of the right-hand cut by using a ½-inch or ⅝-inch spiral end mill with a perfect sharp edge and set about 0.010 inch ahead of center. You will be very surprized to see what a perfect radius a sharp end mill will make at the bottom of the flute. The radius desired is controlled by the angle the head is set over; 15 degrees is the standard for nearly all radii in the bottom of the flutes and desired angle of the cutting edge. Smaller radii may be obtained by bringing the head in closer to the perpendicular. This can be judged best by the tool maker when cutting the tools.

Many times it is necessary to produce a hole of a given taper extending in a piece of work, as in the case of an experimental "cone" in a shotgun where the taper must be in perfect alinement with the bore. At other times it is necessary to produce an impression of a special form which must be true with a drilled hole. In either case, a counterbore may be made whose pilot is the size of the hole and whose body has the form of the desired impression. Since the cutting edges of such counterbores cannot be ground, before hardening they must be backed-off with a fine file and stoned after hardening. Special attention should be paid the hardening to prevent springing. Proper hardening is accomplished by heating in a muffle furnace or in a lead bath, the tool being turned frequently to prevent uneven heating when the furnace is employed. The counterbore is quenched in lukewarm water and the temper is drawn to a full straw color at 466 degrees Fahrenheit. Better results follow when these forming tools are pack-hardened and then quenched in raw linseed or cotton-seed oil. There are many kinds of counterbores made, but for gun work the ones described will be found the best.

Fishtail Cutter — These cutters are used very extensively in gun work, particularly for elongating slots. When such necessary tools are made, much more accurate and satisfactory methods of producing a slot are found with the milling machine. They consist of cutting the slot with a fishtail cutter. Figure 25 illustrates one which every tool maker should be familiar with. When using such a cutter for milling a rifling head cutter or wedge box, the cutter head is held on the centers of the dividing head, and is fed into the blank. The table is moved to produce a slot of the correct length, the operation being repeated back and forth with light cuts until the slot is of the correct depth.

When using this form of cutter, take light cuts and fine feeds, and run the cutter at a high speed

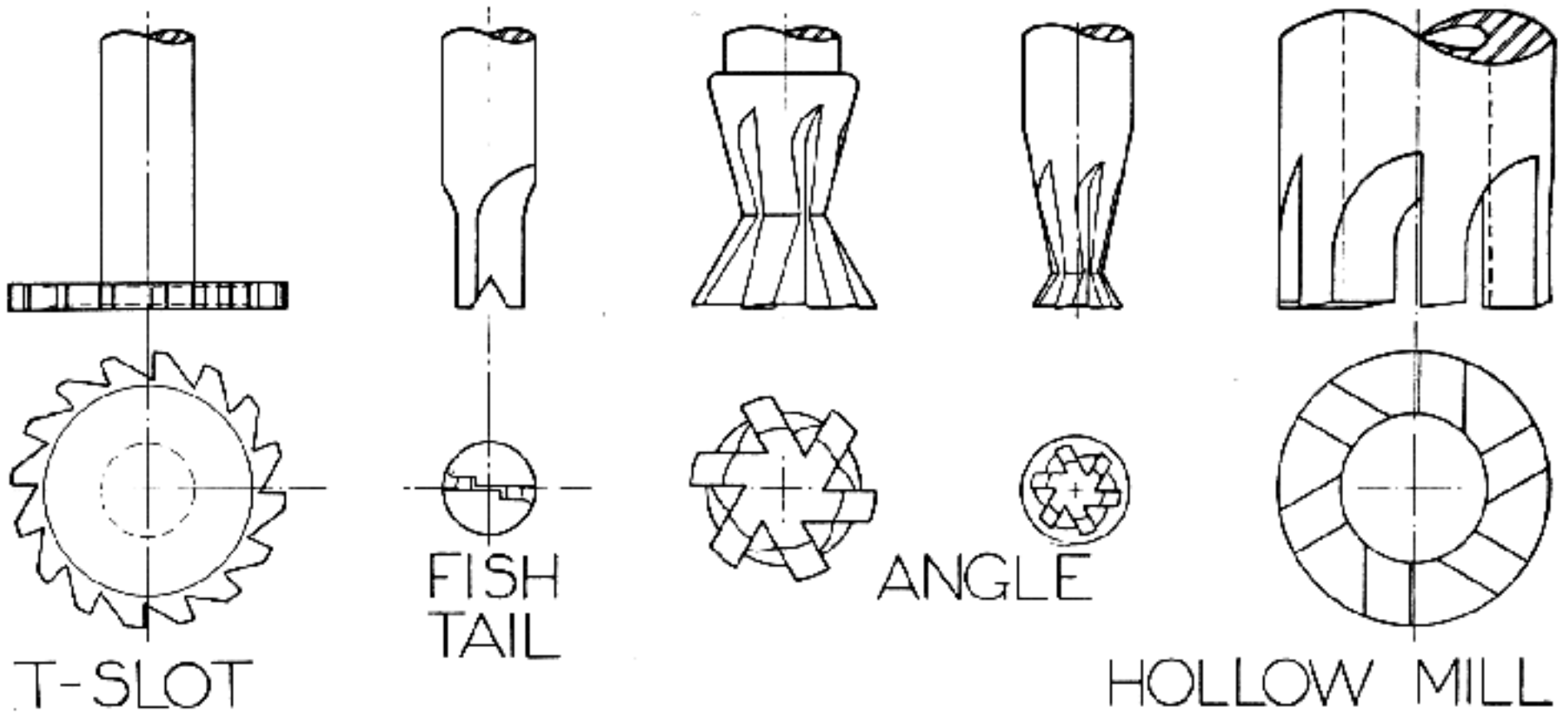

Fig. 25
Special milling-machine cutters, and hollow mill

in the vertical head, keeping it flooded with oil. Before starting, make sure that the cutter is well sharpened and that it has enough clearance at the edges to prevent any deviation from a straight line. When all conditions are right, this cutter will produce a straight true slot in a fraction of the time consumed with a standard end mill. Whenever it is necessary to have the ends of the slots square on certain work produced with these cutters, the holes must be filed or broached to shape after cutting.

Angle Cutters — Angle cutters are used (see Figure 25) to cut out sight slots, dovetailed bases, etc. They are made with straight shanks to fit either in collets or in special holders. Since most angle cutters that are used in the manufacturing of firearms are small in size, a bench miller is employed to cut the blanks. In order to insure teeth strong enough on these small cutters to resist the strain of the full cut, an angular mill should be made which will give the required shape. After the teeth around the circumference of the angle have been cut, the end teeth may be filed, particularly on the small cutters up to ½ inch diameter. For cutters over this size, the end teeth are cut on the milling machine more satisfactorily. When the teeth on the end of the cutter are being cut, the dividing head is turned until the cutter is in a horizontal position. The angular cutter usually used for the end teeth is 80 degrees.

T-slot Cutters — In cutting small slots in various parts of an action a cutter of this form is employed as shown in Figure 25. This type of cutter is used more than any other in special firearm work, as there are various widths and diameters required. Some of the T-slot cutters have teeth cut on both faces, particularly when a T-slot is required in a certain section or part, but since these cutters are only used for cutting on the circumference, teeth then are only necessary on the diameter; therefore, the sides are given a slight angle inward for clearance so that the cutter will not bend in the slot. It is advisable to harden the cutters which have just been described the entire length of their shanks, especially if they are of a small diameter; otherwise they will be very likely to spring and break while in use. After hardening, the neck should be drawn to a straw color up to the cutting section.

If very accurate results are desired, the shanks of these cutters are ground, but for the usual run of work they can be turned and milled, the clearance filed on the teeth, and stoned after the hardening and tempering operation. End mills can be secured from the manufacturer at a reasonable price, as Figure 26 shows. Many times, however,

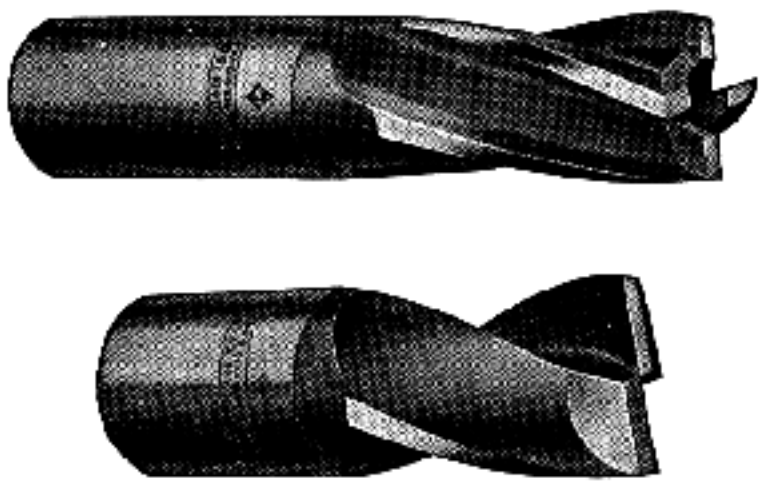

Fig. 26
Two- and four-fluted end mills

special mills must be made; I will assume that the tool maker is familiar with them, for they are commonly used for special jobs and to get into places impossible with standard end mills. Wood cutters also come under this head and are used in various machine operations for grooving and turning special forms.

Hollow Mills — These mills are mostly used on screw machines for roughing down and finishing, and also for screw cutting. They are also used in a drill press for finishing a projection which may be in some given position on a part of an action. In the latter instance they are usually guided by a bushing in a fixture to bring the projection into the correct location. For roughing-down work on a screw machine, solid mills having strong stubbed teeth are preferred because of their solid construction. For finishing they are made adjustable in order to secure the exact sizes, and for small hollow mills three cutting teeth are advisable.

Figure 27 illustrates a hollow mill showing its rear end, bored somewhat larger than the cutting end which allows it to clear on long cuts. The cutting end must be relieved or it will bind on

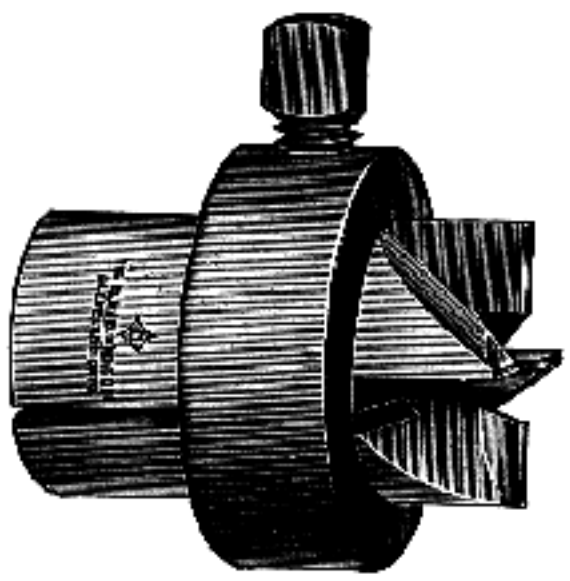

Fig. 27
Hollow mill with clamp

small work, and probably twist it off in the mill. There are several methods of relieving hollow mills; the most common is to ream the hole with a taper pin reamer from the back; another is to file back the cutting edges. Having thus prepared the mill, the teeth are ready to be cut. If four cutting edges are to be given, an end mill may be used of a diameter about double the diameter of the mill, the blank being held in the dividing-head chuck. For a strong tooth the dividing head should be set at a slight angle, or when considerable stock is required for a strong tooth, it should be set on such an angle that the cutter can be fed through the blank. If a deeper tooth is desired, the dividing head is set in a vertical position and the milling cutter fed in until the desired form and depth of tooth is obtained. Adjustable hollow mills may be made by following the instructions given for plain hollow mills except that the mill must be split to allow for alteration in size.

There are two methods of adjusting the mill; in one the outside of the cutting end of the mill is tapered and a collar having a corresponding tapered hole is forced on the mill. The collar closes it and causes it to make a smaller cut. The other method is to turn the outside of the hollow mill straight and close it by means of a clamp collar. Adjustable hollow mills are usually employed for finishing cuts and do not remove very much metal; therefore, the teeth may be made finer than those of solid mills used for roughing purposes. If the teeth are nearer together, they will finish a cylindrical piece of work more accurately than if the teeth were cut farther apart. It is customary to give adjustable hollow mills which are to be used for finishing from six to eight cutting teeth. The cutting edges should be radial for most work. Better results will be obtained if the hole in the cutting end of the mill is left 0.005 of an inch small and ground to size after the mill is hardened. The hollow mill, whether it is solid or adjustable, should be hardened a trifle farther back than the length of the teeth and drawn to a straw color. The mill is sharpened by grinding the end of the teeth.

Forming Tools — Forming tools are principally used when several pieces are to be made of exactly the same shape. They are particularly valuable when making special bullets, special forming cutters and similar tools, and in duplicating a given shape on work produced in the screw machine. Forming tools are made flat and circular in shape. When used in the lathe for forming such tools as formed milling-machine cutters they are usually made flat; for backing-off formed milling-machine cutters they are always made flat, but for screw machines in duplicating a given shape they are made flat and circular.

The flat forming tool is often made as a solid tool but to save steel a special holder should be made with one or two hold-down screws. When only one tool is made, the former will be found to be inexpensive, but for making many tools it will be much cheaper to adopt the latter. On certain classes of work it is advisable to use a forming tool on a spring holder; because of its design it may spring slightly when used on heavy cuts, thus reducing the tendency to chatter. It is necessary to make these holders of tool steel, giving them a spring temper at the point of the goose neck, which allows the forming blade to spring away from the work when under heavy strains.

So that a forming tool will cut readily it is necessary to give the cutting surface a sufficient amount of clearance. For tools to be used for forming milling-machine cutters or similar tools, a clearance of from 10 to 15 degrees will be sufficient; that is, the angle should be from 80 to 75 degrees, but if the tool is to be used for backing-off the teeth of formed milling-machine cutters, it is then necessary to give a clearance of from 18 to 22 degrees.

Before starting to make an odd-shaped forming tool, accurately ground gauges should be made from $\frac{3}{32}$-inch Brown & Sharpe ground gauge stock. In one large manufacturing plant where I was working in the gauge department, when a forming tool was designed, the gauge department first made the male and female gauge before the form tool department was allowed to begin its work. When the work was produced from the tools it came out perfect, saving the time usually spent by guessing methods used in so many shops.

Formed Cutters — The term formed cutter applies to cutters with teeth so relieved that they can be sharpened by grinding the face of the cutting edge without changing the form. The term may be applied, therefore, to any cutter which cuts a form, regardless of the manner in which the teeth may be relieved. Formed cutters are used in many shops where work of irregular shape is milled in large quantities as in gun and automobile shops. If many formed mills are to be relieved it is advisable to procure or make a machine especially designed for relieving, or as the term is applied, "backing-off" the teeth. The backing-off lathe attachment can be purchased with nearly all standard lathes, of which the Hendey is one of the best. I have had quite a bit of experience with this type of backing-off attachment and have produced very good results even on large worm hobs.

There are several ways in which an ordinary lathe can be used to back-off a small forming cutter. One is by placing a stud on a lathe face plate or driving plate. The stud is placed in such a position that the cutter will clear the outside edge. The cutter, which must be a fit on the stud, is clamped by means of a nut. A stationary block is so located on the driving plate as to bring the tooth to be backed-off into its proper location and to keep it from turning during the operation. The forming tool is fed in gradually until the tooth is formed. The finger in the stationary block is then disengaged from the flute in the cutter which is held in position by means of a set screw. The finger is formed to the exact shape of the space milled for clearance or flute. Each tooth is milled separately; therefore, the forming tool is fed in the required distance for each tooth when in position and the process repeated until each tooth has been backed-off. When backing-off cutters in this device it is necessary to cut the notches or spaces between the teeth somewhat wider than the ordinary milling cutter.

When backing-off the teeth for clearance by any of the means described, it is first necessary to form the blank, gash it or cut the notches, and then back-off the teeth. After backing-off, it is necessary to mill the face of each tooth back $\frac{1}{32}$ inch or more to cut away the "jump," as it is termed, caused by the forming tool drawing in a trifle when it first strikes the edge of the tooth. Cutters of this description are sharpened by grinding the face of the teeth.

Fly Cutters — The simplest form of milling-machine cutter is known as a fly cutter. It has only one cutting edge but is particularly valuable when making one or two pieces of a kind in experimental work or for a part of a firearm which cannot be machined in any other manner. Since these cutters have but one cutting edge, they produce work very accurately as to shape, but they must be fed very slowly, and only small cuts can be taken. These cutters do not last as long as those having more teeth; however, they are used on all special work because of the small cost of making them. It is necessary to hold such cutters in a fly-cutter arbor, which can be made or procured from all the large tool-supply houses.

The cutter which is used in a fly-cutter arbor may be filed to a gauge or templet, giving the necessary amount of clearance so that the back edge or "heel" will not drag. If it is desirable to make the impression on the shaper or milling machine it is well to do so to remove a considerable amount of the rough form. The piece of steel from which the cutter is made can be held in the milling-machine tool maker's vise and the shape and clearance cut with a milling cutter. The desired amount of clearance may be set by tilting the vise at an angle of a few degrees.

Arbors — The ordinary taper arbor known as a mandrel is one of the common tools in all shops and is used to turn work pressed upon its cylindrical surface, shown in Figure 28. Mandrels are

Fig. 28
Lathe mandrel

made of tool steel hardened all over and ground to size. Most arbors can be procured from any of the large tool-supply houses in the standard sizes, and it does not pay to make them except for a special size or form.

When making mandrels of tool steel that are to be hardened the entire length, it is not necessary to use the best quality of steel; a lower grade will do if it hardens well. Select stock somewhat

larger than the finished diameter. Take a cut off the outside sufficiently heavy to remove all scale, and leave $\frac{3}{64}$ inch or more for a finish cut on sizes up to $\frac{1}{2}$ inch and correspondingly more for larger sizes. The mandrel should be normalized perfectly in the annealing box. The ends should have a deeper center than in tools where the centers are not used after they are finished. So that the centers will not be mutilated when driven in or out of the work, they should be slightly counterbored or recessed and the edges of the angle rounded with a scraper. This operation is known as "cupping the centers."

Barrel plugs are a form of mandrel, and the instructions given in Chapter IX may be followed when making shoulder barrel plugs where a center is used to have the dead center run on. Before hardening an arbor, the centers should be recountersunk to true them; for this operation, it is best to use a special combination center drill with an angle of 59 degrees instead of the standard 60-degree tool, as the former facilitates the lapping of the centers to a 60-degree angle after hardening. A round fine India oilstone is used for the purpose of lapping the angle. The manner in which the angle is turned on such a stone is in the lathe with a fine small sharp diamond. Other laps may also be employed, such as copper or cast-iron charged with diamond dust or emery. After the lapping operation the centers should be cleaned thoroughly with gasoline.

Examine very carefully the condition of the centers on the grinder, for the trueness of the arbor depends in a great measure on their condition. A mandrel may be ground in a lathe with a Dumore grinder or any universal grinder. Better results can be obtained, however, with some form of grinder having water connections, the liquid continually playing on the work to prevent heating, as heat is very likely to spring the piece, especially if it does not run true, and make the grinding heavier on one side than on the other. When a dry grinder is used, do not force the work fast enough to heat it. The mandrel should be ground to within about 0.003 inch of size with a coarse wheel free from glaze and then finished with a fine wheel.

The amount of taper varies on most arbors, and those procured from the manufacturers have a 0.001-inch taper per inch of length. I have found that the best results are obtained when they are made with a 0.0005 inch and less taper per inch for the reason that nearly all gun work consists of small parts except the tools made for their production.

Drill Jigs — A drill jig is a device for holding work so that one or more holes can be accurately drilled; the location of the holes may be governed by hardened bushings through which the drill is run and centered. The design of a jig depends entirely on the shape of the piece and the nature of the work to be done, but it should be so that parts may be placed in them and taken out as quickly as possible. The fastening or holding-down device should allow rapid manipulation, yet be capable of holding the work without danger of changing the part in location. The construction of a drill jig calls for great accuracy, tho no undue effort should be indulged in. If the location of a hole in a piece of work is near enough when within a limit of plus or minus $\frac{1}{32}$ inch it is a waste of time to attempt to get it within a gauge limit of 0.0003 inch. Still, if the work is of such a character that it is necessary for holes to be within a limit of 0.0005 inch plus or minus or even closer, every effort should be made to locate the drill bushings as accurately as possible.

There is such a large amount of special work to be done on firearms that it is often advantageous to make a temporary jig to secure the accurate results desired. Such designs demand the ingenuity of the tool maker to construct them at a reasonable cost, for they may only serve one purpose and then be discarded.

Laying Out Work — The expression "laying out" as used in the gun shop refers to those geometrical operations in which the shapes and dimensions of parts are indicated by lines made with various laying-out or marking instruments already described in the first part of the chapter. In some complicated details requiring shaping, milling, boring, drilling, etc., a preliminary "layout" is necessary to determine whether the work will "true up" and also to make the machine operations more simple. After the principal base lines of the design have been established, the work is machined to these lines and then the centers for boring, drilling, etc., are constructed in their proper relations to the base surface.

Having planed, shaped, milled or turned a piece of work, completing what are usually termed the roughing operations, we coat the "layout" side with a mixture of coppering solution or with any other suitable preparation that will enable us to see the lines more distinctly. By using the instruments described, lines are established which may be indicated with the center punch. The center being ascertained, dividers are often used and successively set to various dimensions, and short arcs are inscribed, intersecting lines. With dividers set to the correct radii, circles equal in diameter to the

required holes should next be drawn from the indented center. The circles may also be indented with center-punch marks, various distances apart. In a great number of cases, center-punch marks are scarcely necessary when the coppering solution is used.

Circles of the same diameter as the drill will usually be obliterated by a drilling operation and it is a good plan to make additional larger circles by which the accuracy of the drilling may be tested when the operation is completed.

To insure accuracy the prick-punch marks in the centers should be very light, and after the laying out is finished they should be slightly enlarged with the center punch and then drilled with a small combination center drill in order to guide the drill point properly. The first drill is ground to the angle of the center drill in order to follow the true center. After a depth of about 1/8 inch is reached a standard ground drill can finish the operation.

A surface plate or laying-out plate, as it is often called, would be necessary in connection with the described examples, and it would be proper to describe briefly the construction of such plates. For small and ordinary work a surface plate is a very simple affair. Any cast-iron or machinery-steel plate of rigid construction will answer. It is well, also, to have the edges of the plate planed at right angles and the top accurately finished.

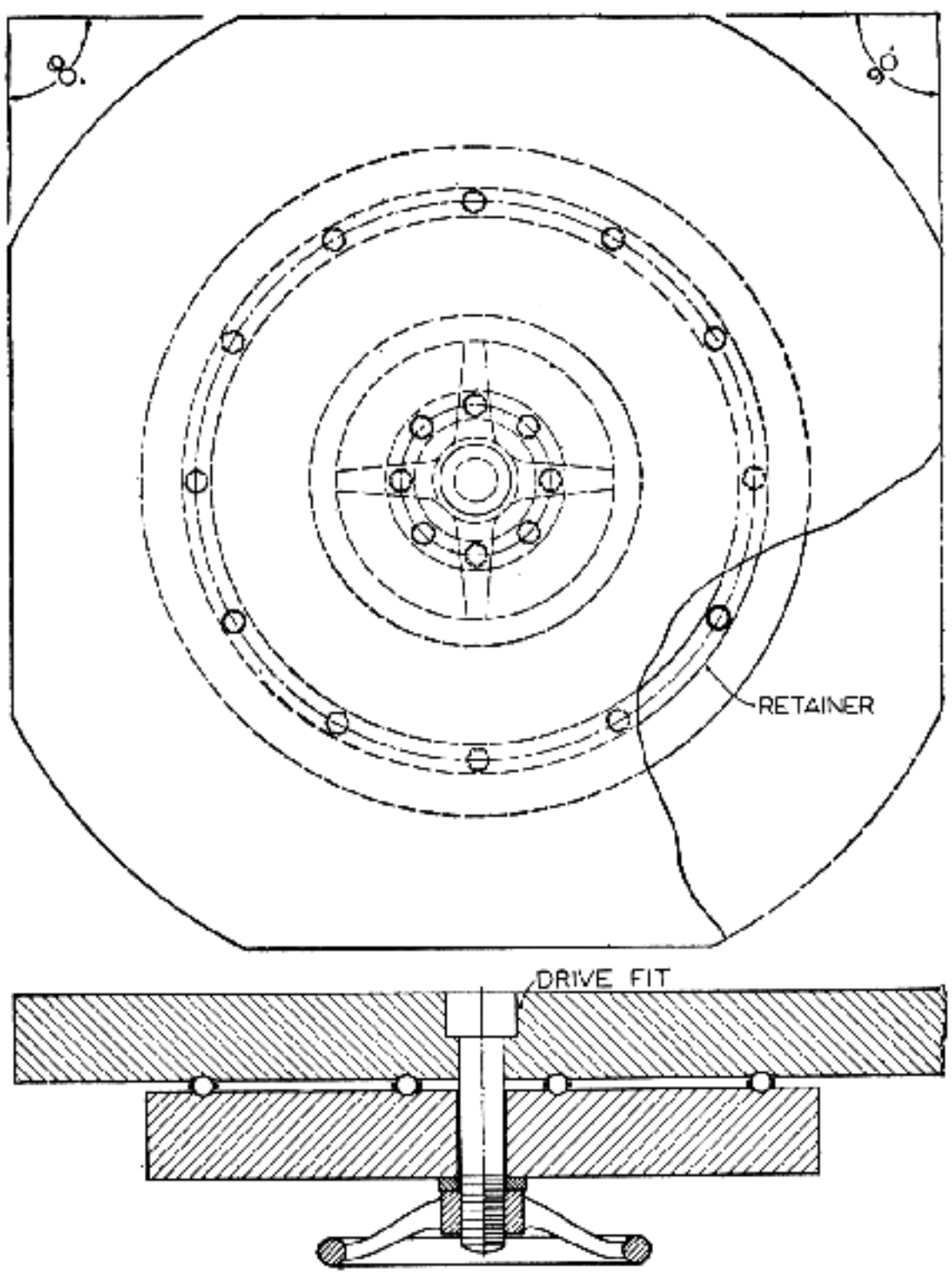

Fig. 29
Suggested design for surface plate

So much laying-out work is done in connection with the making of firearms that I would like to see some tool manufacturer introduce some such circular form of surface plate as Figure 29 illustrates, made to revolve upon ball bearings and with four sides squared. The principal object of such a plate and its construction is to admit of turning any side of the work toward the light. A plate so designed would be a great improvement over the standard form of square or oblong surface plate commonly seen in tool rooms.

Surface plates of this construction for very large work should be proportioned by a competent designer and supported upon a foundation of masonry. Small plates could also be designed to fit the work bench, but a small bench or stand so placed at the tool maker's side so that he may conveniently get around it is better.

The slightest mark raised upon the surface plate with a hammer will interfere with the accurate use of a height gauge or any other tool; therefore, straightening strips of metal on the plate and other such abuses should be strongly condemned; in fact, no tool maker of refinement will allow such a practise.

The Precision Bench Lathe — I can not resist giving a brief description of the merits of bench-lathe practise in gun work and the tools constructed for their production. It is a pleasure to walk into a well organized tool room and see these lathes. The modern bench lathe finds wide application in the construction of small parts requiring a considerable degree of accuracy as well as in fine tool work where its facility of operation and its accuracy make it one of the most ideal tools. Bench lathes have been developed in these last few years to the same high standard of efficiency as the larger types of lathes, and the design of various attachments has broadened the field of these machines so that it is possible for them to handle a wide range of work.

In addition to their adaptation to precision turning and boring operations, bench lathes are equipped for milling, external and internal grinding, thread cutting, filing, turret work, etc. Many of the attachments can be made to take care of any special parts made or manufactured in the tool or production departments. All the parts and attachments should be interchangeable as far as possible; therefore, when several lathes are in a department, a given attachment can be used on

any machine that may require it. For this reason machines of one manufacture should be adhered to.

Past experience in the use of a bench lathe has shown that the proper countershaft equipment adds greatly to its efficiency. It is well to fasten the countershaft to a pipe frame attached solidly to the bench, wall, or ceiling. The frame may be made of ordinary pipe threaded at the ends with collars that are bolted to the bench or other supports. The countershaft should have adjustable brackets which will fit the pipe frame so that it can be adjusted to any desired point, making it possible to use an endless belt. Countershafts should be ordered with grinding attachment pulley, even tho it may not be used at the present time. These lathes are often changed over for other work and serve many purposes. In the production of fine gun work and for the finer work in the tool room, the bench lathe is invaluable. The ordinary lathe is too large and unwieldly, not excepting those lathes constructed on the same principle as an engine lathe made for the bench.

Gauges — While any tool or instrument used for taking measurements may properly be called a gauge, this term, as used by the tool maker, is usually understood to mean that class of tool conforming to fixed dimensions and used for testing sizes but not provided with graduated adjustable members for measuring various lengths or angles. Gauges are used in shops to make one part of a machine or implement, or a tool corresponding to some other part, so that when the whole is assembled, every part will go into its respective place with little or no fitting. The measuring instruments discussed in the first part of the chapter are indispensable, but in shops where work is made on the interchangeable plan—where a piece of work made today will exactly duplicate a similar piece at some future time—a very thorough system of inspection is necessary. In order that the inspection may accomplish the desired result, gauges are made that will show any variation from a given standard. There are various forms of gauges designed for various classes of work. With the modern system of interchangeable manufacture, gun parts are made to a definite size within certain limits, varied according to the accuracy required, which in turn depends upon the nature of the work. To insure having all parts of a given size or class within the prescribed limit so they can readily be assembled without extra and unnecessary fitting, what are known as "limit gauges" are used.

Gauges are usually made from machinery steel, as hardened steel has a tendency to change its shape and size for a considerable time after the hardening has taken place. This change is small, so small indeed that it may never be considered except in the case of gauges where great accuracy is required; yet it has led some of the most prominent gauge manufacturers to use pack-hardened machinery steel.

When making gauges the tool maker should observe the points emphasized with regard to fine precise measurements in the first part of the chapter and also in other chapters dealing with fine measurements upon similar work. When tool steel is used in the construction of gauges, the tendency to change shape may be overcome by referring to Chapter IX, which describes the seasoning of gauges.

It is always necessary to stamp the name of the part to be gauged and the size of the different parts of the gauge. The tool maker should bear in mind that the effects of driving stamps, letters, or figures into a piece of steel will be to stretch it; therefore, it is advisable to stamp the gauge before finishing any of the gauging portion to size, even if there is an allowance for grinding.

To make any plug gauge, which is one of the simple forms of gauges, stock should be selected large enough to turn off the decarbonized surface after roughing out the blank. The handles are turned to size and knurled and the under-cut turned out between the gauging portion and the handle. The blank is reversed on centers and the gauging diameter is turned, allowing from 0.012 to 0.015 inch larger for grinding. A flat is usually milled on the knurled handle and the size of the gauge or any other distinguishing marks which may be stamped thereon. It is also a custom to stamp the under-cut or recess between the cylindrical portion of the gauge and handle, but the stamping on the milled surface of the handle shows greater refinement.

Plug gauges should be heated very carefully for hardening; the lower the heat, the more compact will be the grain, and a piece of steel having grain that is fine and compact will wear much better than one having a coarse grain. If the gauge is one requiring extreme accuracy, it may be left from 0.002 to 0.003 inch above size and seasoned. If not, the gauge may be ground to a size 0.0003 inch larger than the finished size, after which it must be lapped to size. When grinding a gauge of this description it is advisable to use a grinding machine having a supply of water running on the work to keep it cool in the same manner as the grinding of arbors. If this form of grinder is not available, the gauge should not be heated any more than necessary. It should be measured while cool, as steel always expands from the heat, and if

ground to size when heated it will be too small after cooling.

If possible, a form of grinder having two dead centers should be employed. A lathe is often used in the grinding operation, running the work between a dead and live center. Lathes that have been in use for some time are very likely to have become worn so that accurate work is impossible; this is especially true of the spindle which will duplicate its own inaccuracy on the gauge. When necessary to grind a gauge on a machine of this description it is advisable to leave a trifle more stock for the lapping operation.

Lapping — Lapping is a form of grinding applied to work requiring a higher degree of refinement than is possible by the ordinary process of a plain or universal grinder. Figures 42 and 43, Chapter IV, Volume I, illustrate lapping arbors and lap holders, and describe the methods used for such operations. The laps described are the best and cheapest for internal and external lapping. Cast-iron and copper make good laps; but copper has the preference for roughing, and cast-iron for finishing. The lap is split as shown, and the length should be somewhat greater than the length of the work to be operated on.

These lapping arbors are made to the taper-pin standards and ground to the same taper. A hardening swedging plug should be made for each arbor for the purpose of driving the laps on the arbor to keep them expanded to the work. If, in the operation of lapping, the hole becomes "bell mouthed" —that is, enlarged at the ends—it is usually caused by the introduction of emery from time to time as the hole is lapped. To obviate this the lap should be cleaned of all loose emery and the lap kept well expanded by driving it in farther. The hole is usually dry-lapped with a cast-iron lap by using the finest optical emery that will stick or be charged into the lap. This process must be repeated occasionally until the proper size is obtained. If the tool maker is careful to see that the proper emery is obtained and the lap kept expanded to fit the work at all times, the result will be a straight hole. There are quite a few variations in the practise of lapping, and the best methods often depend upon existing conditions. The material used for holding the abrasive is one of the most important factors when the work is soft, and it is very important that this material should be softer than the work; therefore, in the case of shotgun barrels, where every bore is finished by lapping, lead has been adopted as the best metal to use.

Bench-lathe Knurling Tool — A tool of this description is essential for knurling small pins, screw heads, adjusting screws, etc. Figure 30 illustrates the tool as it is constructed. The height of the bottom center and the height of the shank will be best suited to the particular bench lathe employed; therefore the height must come in the exact center; also for the knurl holder. No. 2 holder is pinned in position with a dowel pin solid against the square upright section of the shank. The second knurl holder is made with a free sliding fit so that it will be adjustable. No. 1 is the screw-adjusting holder. Two holes are provided in the shank, making two positions possible; one for small work and the outside hole for larger pieces. The pin which holds this piece in position is reamed out with a taper-pin reamer and a hardened taper pin is fitted.

The knurls are made in any form. The straight knurls are made fine, coarse, or medium. For best results they should be cut on a milling machine, using a 90-degree angle cutting one cut right-handed and the other left-handed. All parts should be hardened for longer life of the tool.

Boring-tool Holder — Figure 31 illustrates a lathe boring-tool holder with which every tool maker is familiar; it is one of the first tools made

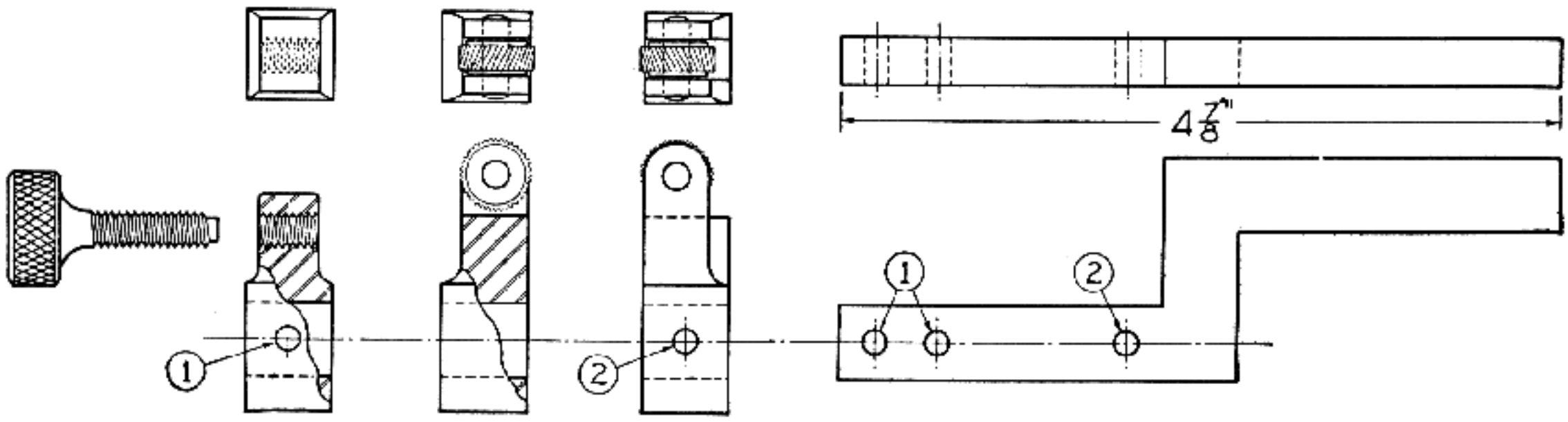

Fig. 30
Bench-lathe knurling tool. Very handy for knurling heads of screws, etc.

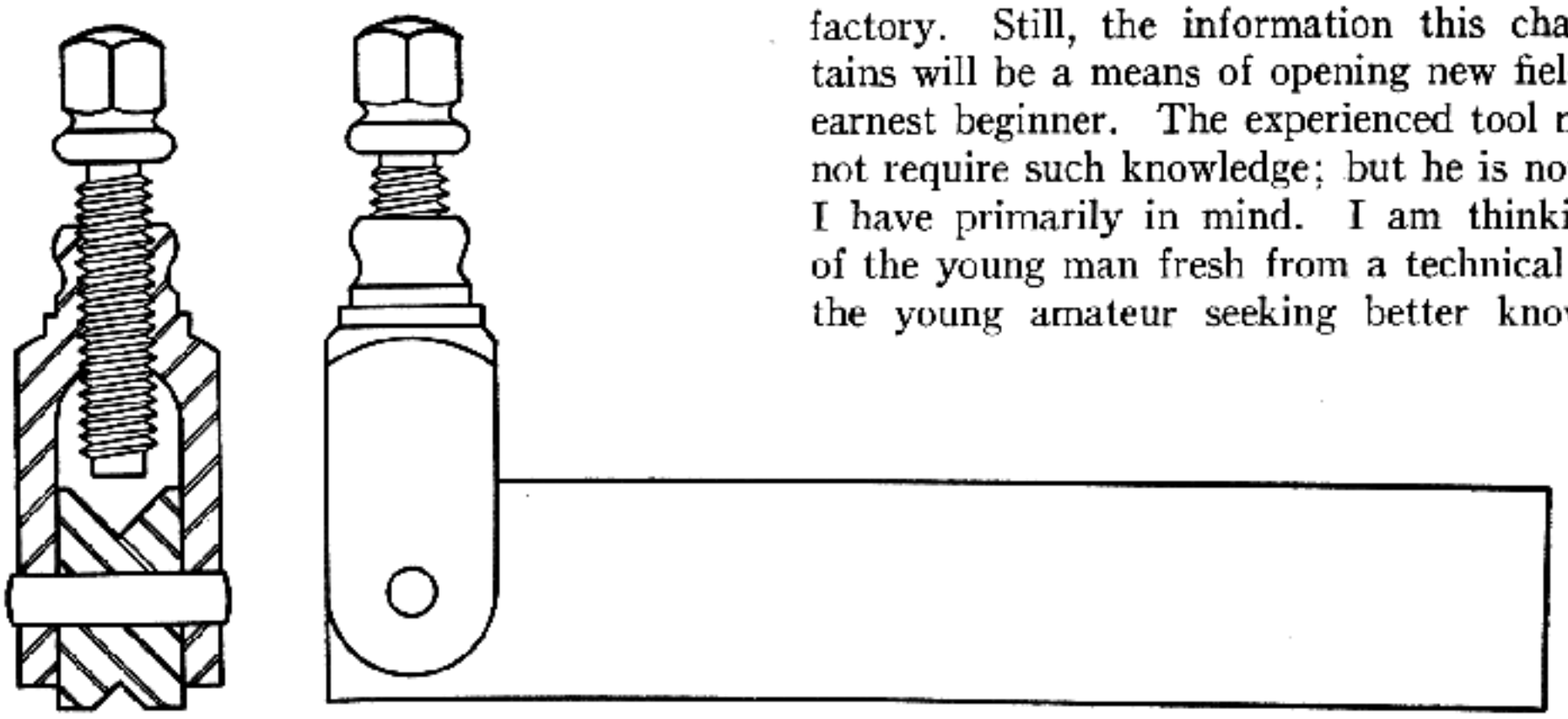

Fig. 31
Boring tool holder. Used on lathe to hold internal boring tools

factory. Still, the information this chapter contains will be a means of opening new fields for the earnest beginner. The experienced tool maker will not require such knowledge; but he is not the man I have primarily in mind. I am thinking rather of the young man fresh from a technical school or the young amateur seeking better knowledge of by the apprentice. The best kind is essential for the gunshop.

Sine Bar — Figure 32 illustrates a sine bar. These tools must be very accurately made; they are instruments of close precision, and as all accurate angles are laid and checked from them, great care must be used in the making. The distance of 5 inches must be within plus or minus 0.0001 of an inch. To secure this close measurement the body of the bar must be well seasoned, and the holes ground and lapped. The two plugs are made in even figures; thus the diameters are .6000, .8000, or 1.000 inch, or any figure that two can be divided into and result in an even figure. Such a tool is used frequently in the gun shop.

After beginning this chapter I realized that a book was necessary to describe some of the acutal work accomplished in the modern gun shop, particularly in the arsenal or any other large arms tools and their construction; for there is no greater field for knowledge of the tool maker's art than in the construction of firearms and ammunition. Very few manufacturing plants offer that knowledge today, for modern methods demand a profit from all labor, and the result is that time limits are placed on all tools produced. The average workman today has become a fixed machine, and in time all our fine workmen will be driven away to seek other occupations.

I do not wish to seem discouraging, but since I have gone through the mill, so to speak, I would not advise any young man to seek long experience in an industrial plant. Let him prepare himself in one of the finer technical schools, and, upon receiving his degree, remove the white collar and step out into these plants for a short period. Let him not stay at one, but make it his business to work in many, and at the end of that time he can judge for himself the path he wishes to follow.

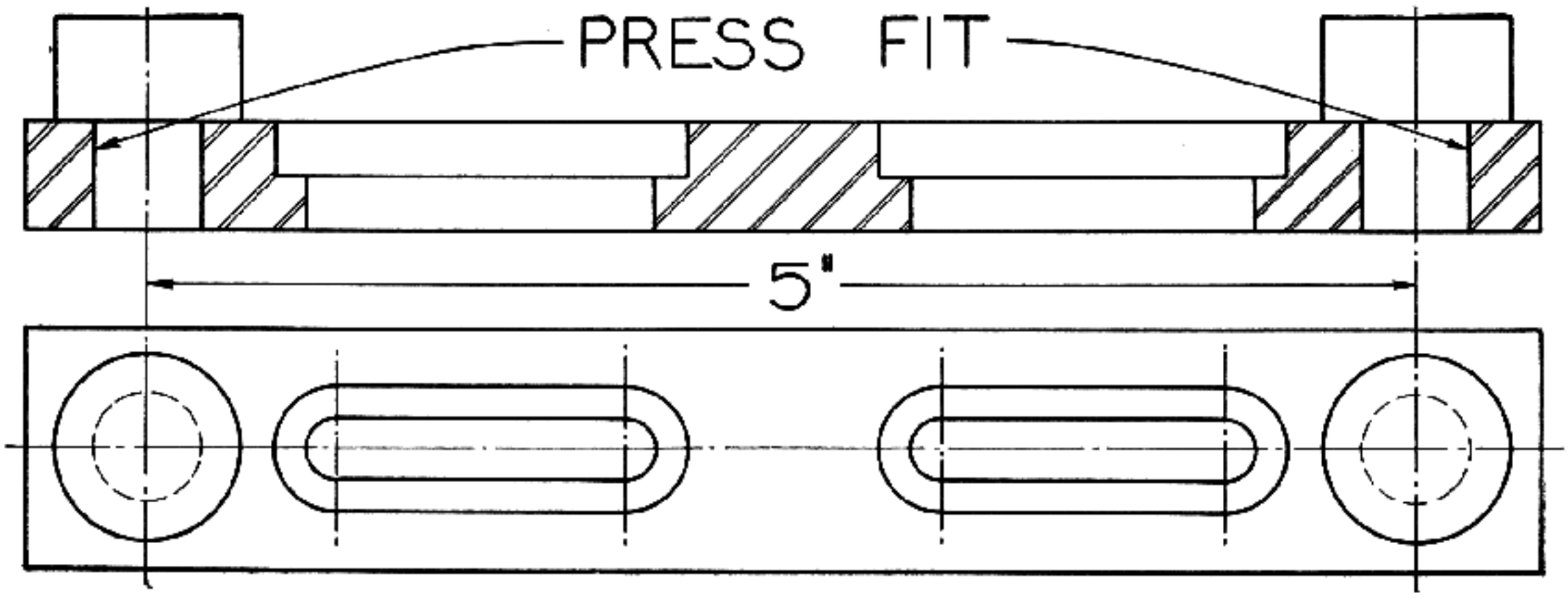

Fig. 32
Sine bar: Used to determine angles and to lay out angles on work for machine operation

CHAPTER IV

Die Making

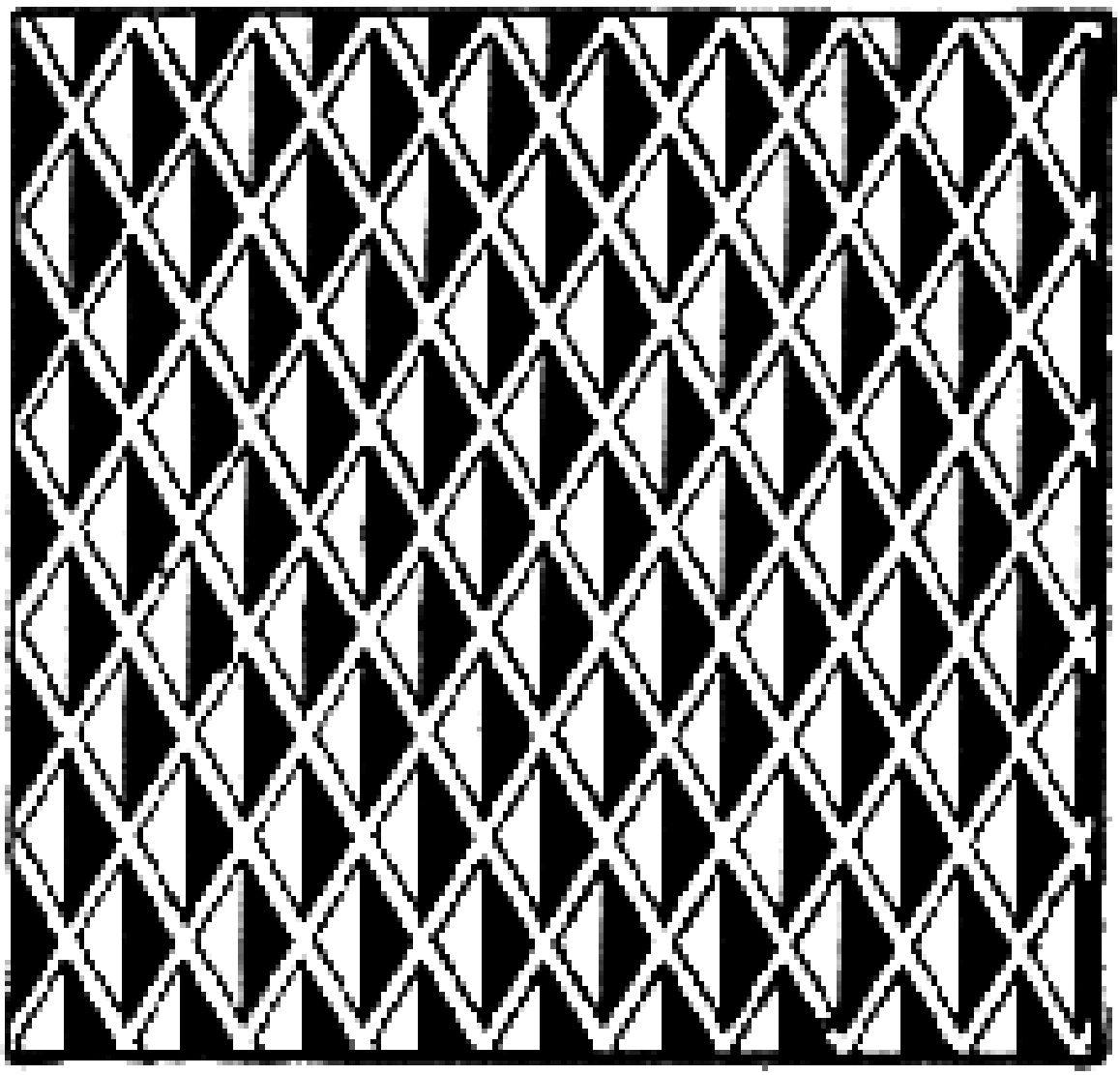

CHAPTER IV

Die Making

DIES are now used extensively and have made possible wonderful results in rapid production of parts, as well as in the production of sheet-metal work. Take for an example our modern cartridge case and bullet; 90 per cent of the operations performed on these are produced with dies. Consider our modern motor car; it would be safe to estimate that over 50 per cent of the production methods employed are by dies. The rifle and shotgun involve the development of dies for butt plates, pistol-grip caps, sights, sight covers, swivel bows, etc. Air rifles for boys are mostly made from dies, which shows what can be done to cheapen machine operations on certain types of metal merchandise. It is rather difficult to classify and give the proper definition of the many designs and types of dies used on power presses for the production of sheet-metal work, to which this chapter will be mostly devoted. Cartridge and bullet dies will follow later, for such a subject must be treated from a different angle.

Die making is in the same general class as tool making, and it is well for any one to gain experience in it, since it comes in very handy on various phases of rifle and shotgun work. One of the advantages gained in die making is that it teaches one the use of a file; it requires a considerable amount of patience and perseverance, particularly when two weeks are spent filing out a complicated form in a blanking die. Die making is fascinating work, even tho it usually taxes the ingenuity of the mechanic when it comes to forming metal in dies. The modern diemaker does not figure out any of his dies as he did a few years ago; today, complete drawings come from the engineering department. Some jobs may require as many as eight or more operations; consequently a mechanic may only get one of these dies to make, the rest being divided among others in the tool room.

A die used for punching a blank from sheet metal is termed a blanking die and is usually considered as belonging to one of four classes: plain, progressive, gang, or compound. As will be seen, however, the main classes of dies are based on the use of the die, and while there are, of course, some general classes into which all dies may be divided, the various types overlap in so many cases that one is often in doubt as to the proper classification.

All dies may, in the first place, be divided into two general classes: cutting dies and forming dies. Cutting dies are often termed blanking dies, including all designs which simply cut or punch flat blanks or pieces of the required outlines from the sheet metal fed into a punch press. On the other hand, forming dies include all those which change the shape of the material from its original flat condition. This second division, however, often includes features which are common to the first; that is, some dies are a combination of blanking and forming dies, the blank to be shaped or formed being first cut out or blanked to the required outline from the material and then formed to the desired shape. Study the fenders or body on your car as an example of such work, tho it is, of course, accomplished a little differently from the manner just described.

The cutting or blanking dies first mentioned may be further subdivided according to the construction of the various types of dies in that class; thus we distinguish between the aforementioned four distinct dies. The second main division—that of forming dies—cannot be subdivided in that manner. Owing to the great variety of work performed in forming dies, the designs vary greatly for a proper classification on the basis of constructional features. They may, however, be divided into subclasses arranged according to their general use; thus, there are dies for bending, embossing, forming, drawing, and curling.

Blanking Dies — Plain blanking dies are the simplest of all types and are used to cut out plain flat pieces of metal not having punched holes. (The term usually applied to punched holes is "perforation.") This type of die consists of a die block or female die which has an opening that conforms to the shape of the part to be cut or blanked out. A male die or "punch," which accurately fits the die block, by a shearing action does the cutting as it descends into the die-block opening, a stripper plate being provided which strips the material from the punch as it is withdrawn on the up-stroke of the press. The opening in the stripper plate conforms to the shape of the punch and is in most

cases slightly larger to provide a little clearance. Between the stripper plate and die block there is a guide (the back of the stripper taking that function in most cases) which serves to keep the stock in alinement with the die opening as it is fed along. In the case of strip stock, a channel is cut in the center of the stripper and the stock is fed through this channel. The space between the die and stripper will be somewhat greater than the thickness of the material used; in fact, this space should be sufficient to allow the stock to move along easily even tho the surface or edges are cut irregularly by the shears or by the punch on each operation or hit of the press. In a simple die of this kind, the spacing of the punched hole is commonly controlled by some form of stop pin which engages each successive opening; for instance, after a blank is cut out, the operator feeds the stock along until the opening made comes against the stop, thus locating the material for cutting out the following blank.

Progressive Dies — This form of die is known by the name of follow die, and is used for work which must be cut from stock to the required shape and at the same time be provided with holes or perforations. The principle of the progressive die is that while one part of the die punches holes in the stock, another part, following behind, blanks out the work at a place where, at a former stroke, a previous hole or opening has been punched. Two separate operations have been performed at the same time, the operation being a progressive one in which the holes are first pierced after which the material moves along until the pierced section is in line with the blanking punch.

Forming Dies — Forming dies are those in which a blank is shaped by simply being pushed into a cavity of the desired form in the die. Forming dies are made first to the desired shape, then placed in the press and templets are cut out until the correct form is obtained. Many trials may be found necessary, but as one is cut and filed, it is laid upon the stock and after the correct form is made it is held as the master templet to make the blanking die. Drawing dies are also used for the formation of cup-shaped parts or articles, but the drawing process differs from forming in that the stock is usually confined between two surfaces so that when drawing radially inward from between them, no wrinkles can form. To define the difference between the two types of dies in another manner: forming dies shape the metal by compressing and bending; whereas drawing dies so act upon a flat blank or a previously drawn cup that the shape is changed by drawing the metal as the punch moves relative to the die.

Making of Dies — When making a die there are several points to take into consideration. The first is the die height; that is, the press clearance and stroke which will accommodate the height of a finished die when assembled. This measurement is taken when the pitman is screwed up to its highest point and the press turned over until the throw of the crank is at its lowest point. The measurement between the bolster plate and ram is the die height or the maximum distance between the bottom of the die shoe and top of the punch holder when the punch is just entering the opening in the die. Second is the type of die holder; it may be necessary to use a die set, made with guide pins, since the pins keep the punch and die in perfect alinement, thus imparting longer life to them. Otherwise, you must rely upon the tightness of the ram riding in the ways and the perfect clamping of the die shoe to the bolster plate. The least shifting of any member means a sheared die and punch.

After selecting the proper die holder, the die block is shaped to equal width and thickness. A good method is to shape the sides; both top and bottom surfaces of the blank length are usually left as the cut-off saw leaves them, except when fitted into a depression in the shoe. The upper surface is smoothed in a shaper or it may be placed in a surface grinder and ground. It is necessary to have this surface smooth in order to lay out the correct shape of the hole, either from a templet or with instruments as described in Chapter III. A roughly machined surface would allow neither distinct nor correct lines. The die must be laid out so that the stock may be readily fed to it. If the grain of the stock is a matter of importance, as in making a tempered spring similar to those seen on some automatic shotguns, the diemaker must take care to see that the grain runs in the proper direction.

The face, or the upper surface of the die, is covered with the coppering solution or placed upon a hot plate and the color of the steel allowed to run to a very dark blue. The outlines of the piece to be punched are then laid out, and after the die has been carefully laid out from the templet or drawing, all round corners should be drilled with a drill of the proper size and then reamed from the back side of the die with a taper reamer to give the desired clearance. A tapered pin reamer is usually employed and the balance of the material removed by drilling.

The method of removing the center or core depends on the custom practised by the individual die maker; some may drill the holes so that they

break into each other; if so, the best drill to use is a "straight-fluted" drill. Some drill small holes and use a counterbore to enlarge to size so that the holes will break into each other, while others use a small standard twist drill and allow a small web between each hole and the next, the intervening stock being cut out with a flat-ended hand broach usually made from a power hack-saw blade with the temper drawn to a blue. The last-mentioned method is the safest and most reliable.

After the center has been removed the die may be placed in a shaper or a die-slotting machine, and by the use of specially-ground tools the desired angle of clearance can be given. The amount of clearance or draft varies with the nature of the work to be done. When a die is shaped out on a shaper, two parallels are made with a one-degree offset, and when placed between the jaws of the vise with the die in the center, the proper clearance is shaped out of the back side of the die. One degree is too great a clearance for some classes of dies; therefore, the parallels should be made with different angles according to the nature of the work to be made and the life of the die.

After working the impression as near to shape as possible in the machines by shaping or slotting, it is finished by filing. In order to give the die the proper clearance the inside surface should be gauged with a diemaker's square set to the proper angle. The clearance differs in various die shops and also on different classes of work, so no stated amount can be given. For the general class of work it varies from one-fourth to two degrees; the latter is excessive and is seldom given unless it is necessary that the piece punched shall drop from the die each time. From one-half to one degree is usually the standard clearance on all classes of work; therefore, for rifle parts, one degree is a standard which may be used on butt plates, pistol-grip caps, sights, etc.

Die Filing — In shops where much die work is done a die filing machine is employed for many of the operations of working the form in the die to shape; also for gauges, templets, lapping dies, and various other parts. One of the small filing attachments comes as standard equipment with a bench lathe. Since the tables of all modern filing machines can be set at any angle, dies can be filed or lapped at the proper angle to give the desired clearance. A saw may be used in place of the file when an overhanging arm is used as a guiding medium, and the core of the die sawed out. This is one of the most satisfactory methods of cutting the core from any small die having an irregularly shaped opening whose outlines are such that the ordinary method either does not prove satisfactory or is extremely costly. For large work an ordinary hack-saw blade may be used, holes being drilled at the corners of the openings. For small work and where irregular shapes are to be produced a narrow blade whose teeth have considerable set is advisable.

For roughing out a die opening, a coarse file should be used, the file being clamped at either end and the work held against it by hand pressure while one or two hold-down fingers are held over the top, allowing enough freedom of the die to be moved at will. When taking finishing cuts with small fine files, the file is usually held in the lower clamp, and as the file clears on the return stroke undue wear is avoided. The surfaces produced by filing machines are flat and especially adapted to dies having but a small clearance angle where any rounding of the surfaces would not be allowable.

Shear — Die blocks have their cutting edges beveled as in perforating punches, so that the blank or slugs may be cut from the stock by a shearing

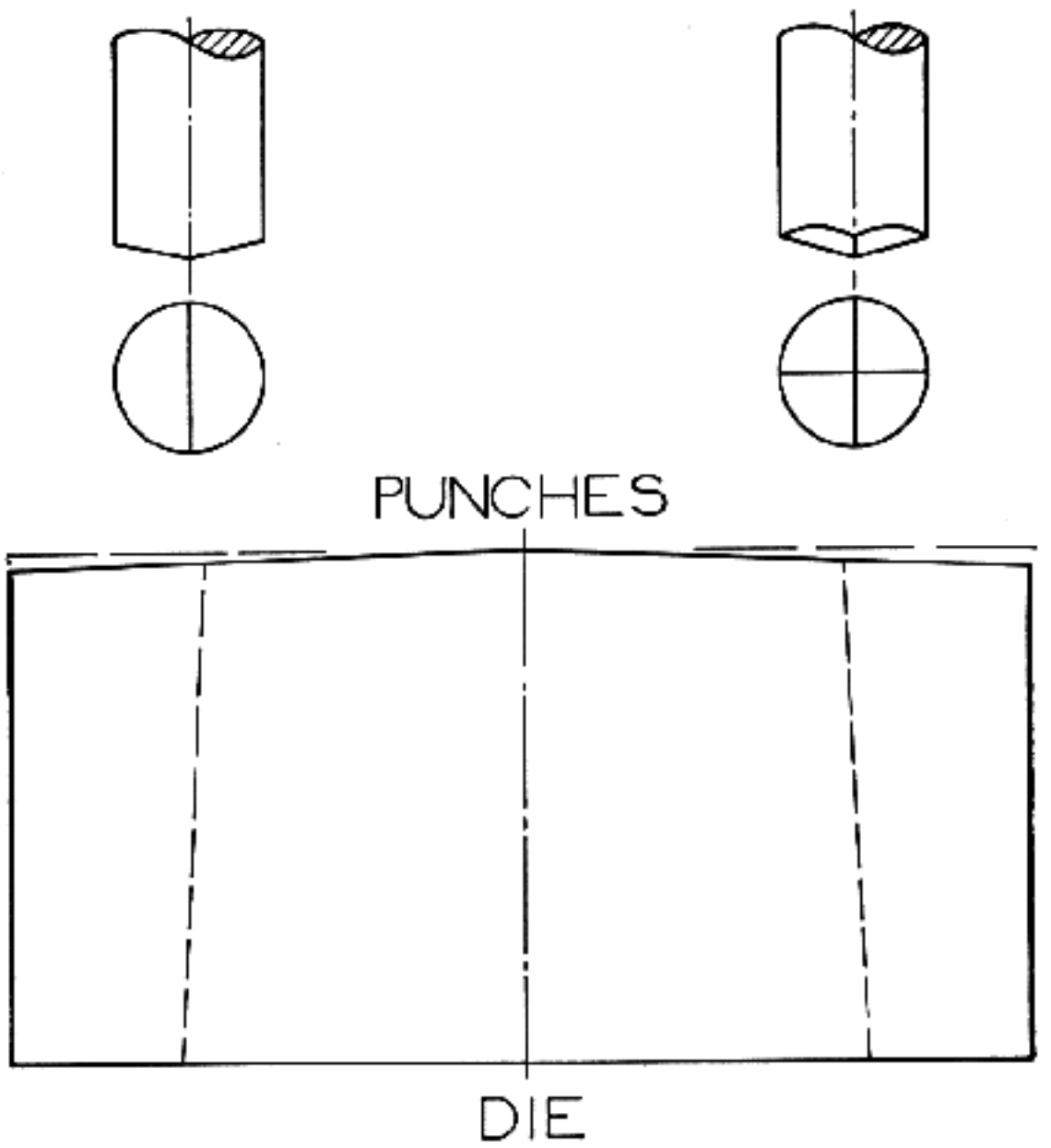

Fig. 33
Illustrating shear on die and punches. Required when heavy stock is used

cut. Shear is given the face of the die to reduce the power necessary to cut the blank from stock. (See Figure 33.) The amount of shear given any die is gauged by the stock used; therefore, when a die is to blank out 16-gauge stock, the height of the center is the thickness of stock to each end of the die. There are exceptions to this rule when cutting this bevel.

The face of a die is sheared when the blank or piece forced through is the product to be saved, but whenever the piece surrounding the blank is to be saved and the outside material is of no use, the face of the punch is given shear and the face of the die is left perfectly flat. The cutting face of the die is usually given shear when very much is to be removed by a shaping operation; when only a small amount is required, it is usually done in the surface grinder by first grinding one side and then the other with a piece of metal used under one end to raise it the required amount to secure the proper shear.

Sectional Dies — So that dies may be more easily worked to shape, they are often made in two or more sections which are fastened together by dowels and screws and held in such a manner that they can not spread. A recess milled in the die shoe at a depth sufficient to hold them is employed as well as the dowel pins.

Dies of this form should have the surfaces that go together finished true; the pieces should then be clamped together and the dowel-pin holes and screw holes drilled and reamed. If the die blank is to be held by fillister-head screws, the die shoe is drilled and tapped or vice versa. The screw is inserted and the top is laid out to the outlines and punched. After the die is hardened and screwed in position, the dowel-pin holes are drilled and reamed in the die shoe; otherwise, the little change in the hardening of the section may cause them to be thrown out of line.

After the proper lines are scribed on the surface of the die, it is taken apart and the opening cut out on the shaper or milling machine. The section of the die is held at the proper angle to give the correct amount of clearance. After the two or more pieces have been put together, the opening to the templet may be finished with a file.

When the die is finished to the templet and the correct clearance given, make sure that the walls of the opening are straight—"not crowning." It is not always considered advisable to carry the clearance to the edge, as the size of the opening would increase every time the die were ground. In such cases the clearance extends from the bottom to within about 1/8 inch of the cutting surface. The walls of the upper part of the opening are at right angles to the base of the die, but they must be straight, because, if the opening is wide enough to allow the punch to pass through the crowned part, the material, if thin, is likely to leave the blank with ragged edges, which would extend up on the sides of the punch and have a tendency to crack the die.

Punches — The punch is made to force the metal through the die, producing pieces of the desired shape. It is customary to make and harden the die using a templet or a drawing to secure the desired shape, after which the punch is fitted to it. The templet may be used in laying out the punch for a plain die if the shape of the opening in the die is the same on each side and the die does not change shape in the hardening. Either side of the templet may be next to the face of the punch, but if the outline is of an odd form it will be necessary to exercise care to see that the proper side is used because the side of the templet placed against the face of the punch when laying it out will be opposite to the one placed against the face of the die; therefore, it is always best to mark the templet "up on die" on one side and "up on punch" on the opposite side, then no confusion takes place when laying out either one.

To obviate this trouble many die makers lay out the face of the punch from the opening in the die before the shear or beveling takes place. In order to hold the punch and die together, so there will be no danger of the punch slipping while the shape is transferred, the die and punch are clamped together.

The machining of a punch blank varies according to the size of the punch. Some have shanks turned on the end, while others are fitted with fillister-head screws and dowels to the face of the punch holder. The method may depend upon the size and shape of the punch, and on whether it is to be used singly or in combination with other punches. If so, a separate cold-drawn piece of steel is used to set these in. The service for which the punch is intended is another point that should be considered; that is, whether the die is for producing comparatively few parts or is intended for continuous service. When punching heavy material the punch must be firmly secured against a vertical thrust in either an upward or downward direction, because when the punch ascends and is stripped from the stock, it is subject to a heavy downward pull. If the die is intended for a small amount of work, as in a gun shop, a cheap and quick method of making both the punch and die would be advisable. After deciding the method of clamping the punch to the punch holder the machining operation follows. The end which is to fit in the opening in the die should be finished with a smooth flat surface and colored with the coppering solution. After coloring it may be clamped to the face of the die with a clamp, and the outlines of the die marked on the face by scribing through the die opening. This outline should be accurately marked with a sharp-pointed scriber and prick-punched very

lightly, as the scribed lines are likely to become obliterated by the various operations of machining the punch to shape.

After the outlines have been carefully prick-punched, the punch is ready to be milled or machined in a shaper to the correct outline, leaving enough stock at all points to shear into the die. When the punch is milled to shape, the irregular surfaces may be produced by fly cutters, of which a description is given in Chapter III. If it is shaped to form, it is usually held between the vise jaws or between a pair of centers, and before the final finishing cuts on the lines it is filed on a bevel exactly to the lay-out lines, so that the shaper tool will not obliterate the lines or break off the metal in ragged edges, and will at the same time allow enough for the shearing operation.

At this stage of the operation the term "shearing in" is used. The punch should be machined very close to the lines and then placed over the hardened die and forced into it about $\frac{1}{32}$ inch, which gives a true impression of die openings. After the punch has been sheared in for a short distance it may be removed and worked to size by means of a file to the obviation marks, as that portion sheared in is termed. The operation of shearing in may be repeated until the punch enters the entire length.

The amount of clearance between a punch and die for blanking and perforating, or the difference between the size of the punch and the die opening, is governed largely by the thickness of material to be used. If the stock to be punched is thin and soft it is necessary to make the punch a closer fit in the die than if the material is heavy or very hard. For thin stock such as tin and soft brass, the punch should be a close sliding fit to the die in order to avoid ragged edges on the punched blank, but for heavier stock there should be some clearance, the amount depending upon the thickness of the material. The clearance between the punch and die when working heavy material lessens the danger of breaking the punch and reduces the pressure required for the punching operation. To obtain the clearance between the punch and die it would be well to look up the tables in various technical hand-books.

A loosely fitted punch will cut absolutely free from burrs up to a certain point, but if it is a little too loose or a little too tight, ragged edges will be left on the material as a result. A good general rule which I often use to determine the clearance is to allow a clearance between the punch and die equal to 5 per cent of the thickness of the stock to be cut. For example, suppose a punch and die are required for cutting out a blank for a butt plate 0.0625 inch thick. The 5 per cent of the thickness of the stock equals $0.0625 \times 0.05 = 0.0031$ inch, which would be the difference between the punch and die. After the punch has been fitted to the die, the cutting edge should be faced off to insure a good working surface and a sharp edge. It is then ready for hardening.

Hardening Dies and Punches — When handling work of such a character as the hardening of punches and dies it is impossible to adopt any set method not to be deviated from. No class of work calls for greater exercise of skill and common sense than the correct hardening of dies and punches to secure the proper efficiency from them. The secret of success in hardening dies by the ordinary methods consists in getting as nearly as possible a uniform heat. To accomplish this, the die or punch should not be heated too rapidly, as the edges and lighter portions will heat faster than the balance of the piece. Unequal contraction, when quenching in the bath, follows uneven heating; and unequal contraction causes the die or punch to crack. High heats cause cracks in steel; then again, high heats render it weak, and the result is that it cannot stand the strain incident to contraction of one portion of the steel when another portion is hard and consequently rigid and unyielding. Steel is strong when hardened at the proper temperature, known as the "refining heat." See Chapter VII for further information on hardening.

Before hardening a die the stripper and other screw holes should be drilled and tapped, and also the holes for the gauge pins or stop. If any stamping of the die is to be done it should take place at this stage. If there is no stamping to be done on the die regarding the number or operation, the name of the steel should be stamped so that if any alterations are made in the future, the method of hardening will be known. This applies to the punch also. After all screw holes, top-pin holes, etc., which are blind, are filled with fire clay or asbestos mixed with water to the consistency of dough, the die and punch are ready for hardening. Extreme care should be exercised in the heating; the heat must be no greater than absolutely necessary, and it should be uniform throughout—the corners of the die or punch must be no hotter than the middle of the pieces, and the outside surface must be of the same temperature as the interior of the steel.

Most punches and dies are made from oil-hardening steel, very little of the high-carbon tool steel being used today for this purpose; if a high-carbon water-hardening tool steel is to be employed for draw-dies and punches, or even for blanking and forming dies used in double-acting presses, they

require an extreme hardness. For most work the tool steel used in making punches and dies should be of a good quality. A die or punch that has cost from fifty to one hundred dollars for labor is as likely to crack when hardened as tho the same steel had been made into any other form of tool; because of its shape and irregular thickness of stock at various points, and because of the numerous sharp corners that are likely to be present, it is a tool that requires extreme care in handling when hardened. A good grade of tool steel, either oil-hardening or a high-carbon tool steel free from harmful impurities, is less liable to fracture than an inferior grade, and the slight difference in cost is offset many times by the cost of labor in the die or punch construction. This does not mean that a high-priced steel must be used for this class of work; simply a good quality of steel, low in the percentage of any of those impurities which cause trouble when the steel is hardened. When we speak of good reliable steel, we do not necessarily mean a high-priced steel.

In the construction of some dies a saving may be effected by making the body of cold-drawn steel or even cast-iron and inserting bushings of tool steel; then if at any time the dies become worn they can be replaced simply by making new bushings, and if ordinary care is taken, the holes will be concentric and consequently the correct distance apart so that there will be no necessity of altering the location of the punches, as might be the case if a die made of a solid piece of steel were hardened.

As for irregular-shaped punches that are to cut thin stock, make them of machine steel and case-harden them. Soft steel, case-hardened, does not change its shape or form as much as some tool steel not given proper normalizing and heat treatment, and even if the punch does change slightly the interior is soft and can be readily forced back into position. Since the outside is hard, the punch will wear nearly as long as one made from tool steel, for practically the only wear that occurs on a punch occurs when it is passing through the stock. For thin brass the punch works well when made of tool steel and left soft; when worn badly the punch can be peened on the face enough to upset it and then be sheared into the die.

Many die makers overlook the importance of first roughing the die and punch nearly to size before normalizing them. Internal strains occur in the bar of steel during its manufacture which are sure to cause distortions of the die or punch unless these strains are removed before the work is brought to its finished size. Some steels may be free from strains, but there is no way of determining beforehand whether the steel has settled or not; therefore, to guard against distortion, the careful die maker will not take any chances, but will anneal the piece after it has been roughed out, to relieve these possible internal strains.

Tempering — A very common method of drawing the temper of dies and punches and similar pieces is to heat a piece of iron or an old die block to a red heat and place the hardened piece on it, leaving the face of the piece uppermost. Experience has shown, however, that this method of treatment is too harsh for hardened steel, especially when the work is in the hands of one not thoroughly experienced, for it subjects one side of the work to an intense heat while the opposite side is exposed to the cooling effects of the air. When an open fire is used, a plate may be set on the fire and the die or punch placed on the plate before it is hot. The temperature of the plate may be raised gradually, the die being turned occasionally. In such a manner, the temper is drawn to the desired degree with safety. If such a fire is not available, two plates may be employed, one heating while the other is in use. The first one should not be very hot, the next somewhat hotter, and so on until the die or punch is drawn to the desired color.

When a die to be hardened is of such a shape that it is likely to give trouble, much more satisfactory results will follow if the pack-hardening process is used as described in Chapter VII. Run the dies in the fire from one to three hours, and after the specified time, dip them in raw linseed oil, back and forth, to force the oil through the openings. Dies with openings having perfect circles may be left a trifle small. After hardening, they are ground to size either on a lathe or an internal grinder.

Forming Dies — Notwithstanding the fact that forming dies are extensively used, there has been a lack of definite information pertaining to the fundamental principles and rules governing the drawing and forming of sheet metal. This is doubtless due to the fact that the exact method of designing and constructing a forming die depends to such a large extent upon the nature of the drawing operations. It is doubtful if any branch of die making requires more experience than that which has to do with the drawing and forming of sheet metal. The following outline of information on this subject is very incomplete; still, the practical problems that are frequently encountered in actual practise are covered; and in any case the reader, when taking up such work, should consult men who have had actual experience, for it will be difficult to find the necessary information in books.

When a forming or drawing die is to be made for producing a cup, skill must be exercised by the operator to determine what form or type of die will give the best results, what diameter of blank would be required to produce a part of the required form and depth, and whether one or more operations are necessary.

Clip Hand Guard — The subjects given here are parts that nearly all riflemen are more or less familiar with, and you can understand what an important part die construction is to even the firearm industry, even tho we do not see some of the parts or are not aware that dies were used to construct these pieces. The form of the finished part and the developed blank are described, but to show the design of dies used would be folly, for no one would be able to produce such parts for a profit. They could only be used for an experimental subject in a technical school teaching die construction.

Figure 34 illustrates a hand-guard clip as used on a Springfield service arm together with the developed blank. This part only requires two dies,

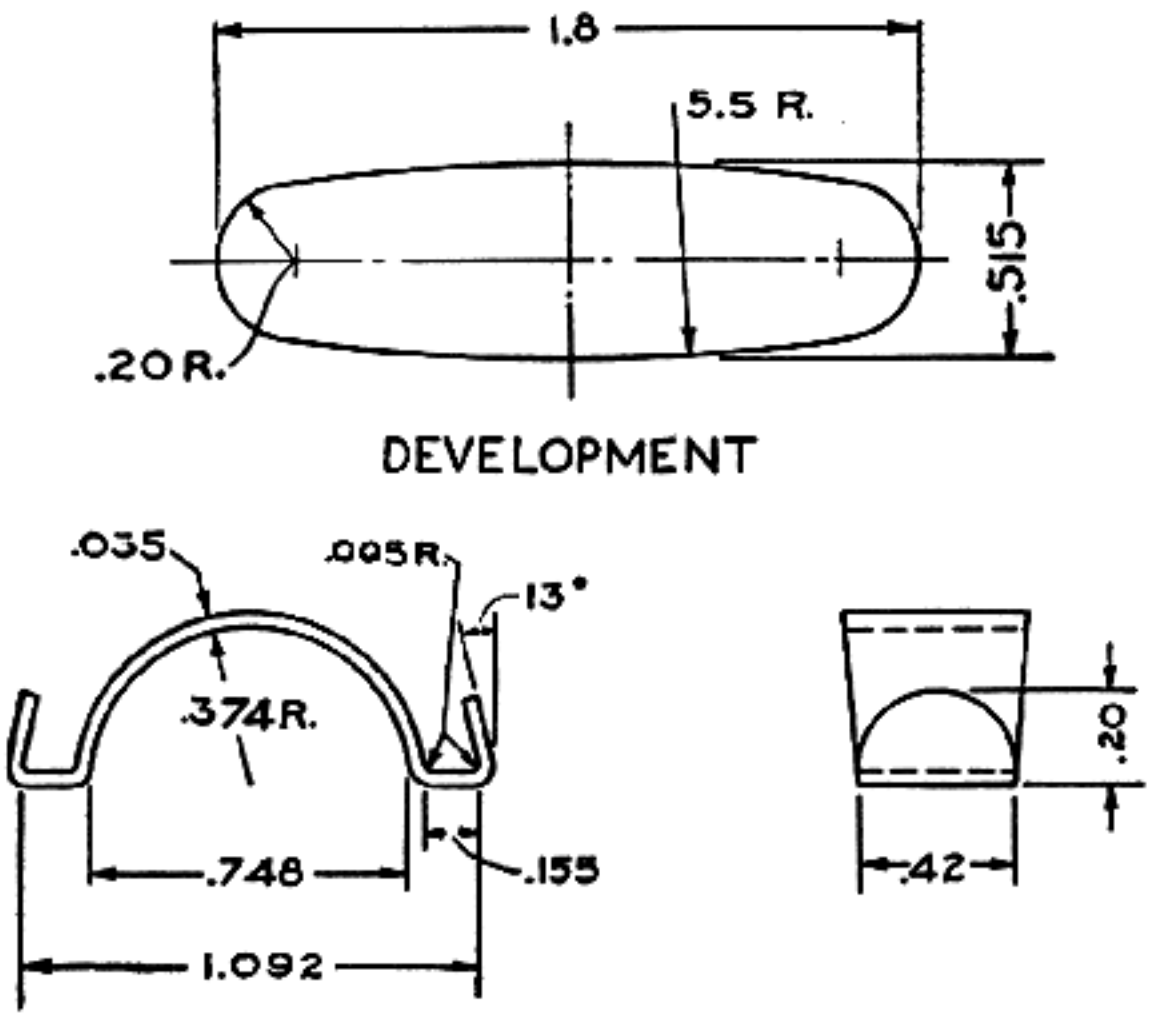

Fig. 34
Springfield hand-guard clip. Two of these clips are used to hold the hand guard in place

the blanking die and the forming die. The design of the forming die for this part is of a type in which the blanks are placed over a form at the bottom and the punch takes the opposite form. Dies for this class of work are designed for forming such parts in different ways. Since there are 12 degrees on the ears of the clip, these must be formed over a greater angle on the punch in order to take care of the spring of the metal. The inside punch must be floating and controlled by the action of springs, while the outside punch forms in the ears to the correct angle. When the stock to be formed is elastic, such as spring steel, the part is bent slightly beyond the required angle to compensate for the backward spring when the pressure is released. To determine this allowance is, of course, a matter of experience; at times it is controlled by the pressure exerted by the adjustment of the press. The center of the blank has a $\frac{1}{16}$-inch hole punched in the center; it is placed in this position for locating while forming. A small pilot punch must be placed in the center of the upper punch to hold the clip in position while it is being formed.

While it is possible to make this piece in one operation, two would be advisable to simplify the construction of the die. In this case it is possible to make the clip in the same die block, changing the piece from one operation to the other, which action also simplifies the stripping of the piece from the punch. The ears would be formed first in the right-hand side of the die, and the radius would be formed in the left-hand side; therefore it would be more simple in form and less expensive to make. It is also necessary to provide guides and stops to locate the clip properly. If the stock used in making the pieces is a high-grade spring steel it must be hardened and tempered. It will be found necessary to relieve parts with a radius where the bends occur, to prevent crushing or disarranging the grain

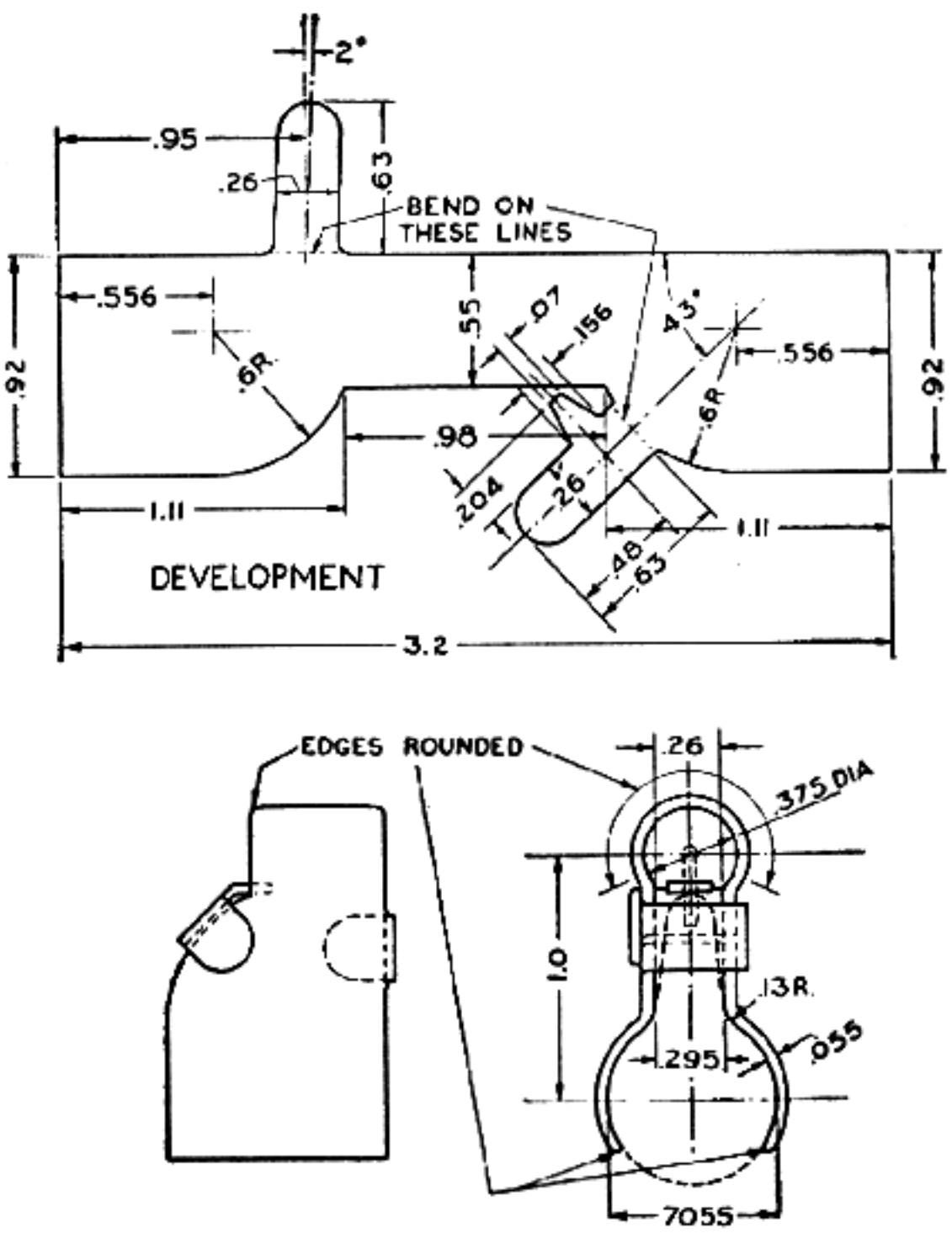

Fig. 35
Springfield front-sight guard or cover

of the steel to such an extent that it would cause it to break when in use.

Sight Cover — Every one who has ever had any experience in handling a Springfield rifle will recognize the cover shown in Figure 35. The development of the forming dies for this piece alone requires considerable time, and the operation usually taxes the ingenuity of some of the best die makers. A blanking die is made just reverse; the punch is on the bottom shoe and the die is on the top, with a knock-out to eject the blank. A stripper pad surrounds the punch, with either springs, rubber or air used to strip the scrap from the punch. Disappearing pins are placed in the stripper plate to guide and place the material in position over the punch. It is such an odd-shaped blank that it is best to make the die in sections, and the section where that close delicate end comes should be made small so that if it ever breaks there will be very little work in making a replacement.

The following operation is done in three operations. The first forms the ears where the bend is shown in the illustration, also forming the radius on both ends, the flat and part of the top radius. These forms are made on a pressure pad working inside of guide blocks or a boxed-in die, but in this instance it is only necessary to place two hardened blocks in position to bend over the ears at right angles, and the guiding section can be located on the ends and sides. For a complete die it would be best to make the complete form in sections where the pressure pad rides, and at the same time guide the punch in its proper position. The punch is made to the proper radius to form the part for the turning operation and forming the .375-inch diameter. A very complicated die could be made for this turnover together with bending over the ears in one hit of the press; in fact, the two operations could be combined in one die by forming the piece first on one side and finishing it on the other.

Removable Front Sight — Figure 36 illustrates a movable front sight to go over the Springfield movable stud. Many men have expressed a desire for a front sight that could be removed at will, or for one that could be carried in their pockets and used in case of an accident to the standard sight. A neat and artistic stud could be attached to the barrel, and the sight attached at will. This would be valuable when a telescope is used and a small folding leaf sight with an aperture in it over the bridge of the receiver as an auxiliary sight. The cost of stamping out such a piece would be no greater than five cents; therefore a half-dozen could be carried in your equipment for emergency purposes.

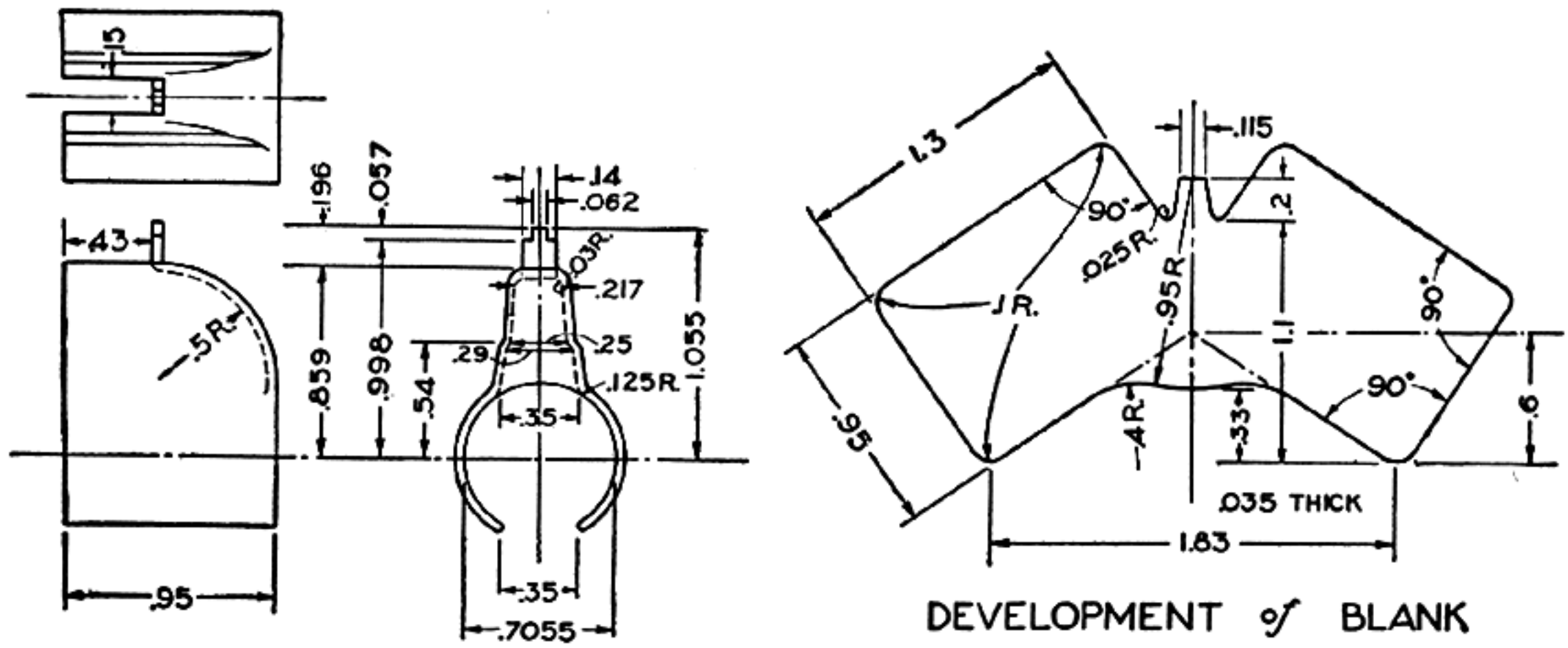

Fig. 36
Springfield removable front sight, showing how the blank is developed to the finished sight ready to be placed in position

The developed blank is not quite as complicated as the front sight cover; still there is considerable work necessary to produce the desired form of the removable front sight, as the illustration shows. The nature of the blanking and forming dies is very similar to that of the front sight cover.

Setting Forming Dies — When setting up press forming operations the blank formed by the tools is used to locate the punch in the die before securing the die to the press. When the tools are being tried out for the first time and no samples have been made, they may be set with strips of stock

cut from the stock to be formed. If setting a die for a piece in which the bends are not parallel but off at an angle, the practical method is to locate it approximately with the blank and slightly tighten the screws in the press bed; then, with tin strips of metal the same size as the blank, gauge the exact distance, after which the die can be secured to the bolster. Do not assume that a die is certain to be satisfactory when the samples have been produced by bringing down the press by hand very slowly. There is sometimes variation in what the tools will do when operated by power and when operated by hand.

Pressure Pads — Three separate means of controlling the pressure on the die pads are air, rubber, and springs. The first is the most satisfactory for securing the correct pressure on forming dies. The rubber pads used on various types of forming dies for supplying the necessary pressure to the die pad or blank holder should be of a circular form measuring between 5 and 6 inches in diameter. A hole should go through the rubber so that a long bolt may be fastened to the bottom of the die. A large steel washer should go next to the die, and then the cylindrical rubber pad; another washer and then a nut to tighten it against the die. Various pressures may be applied according to the amount the nut is tightened against the steel plates. Pins are located in given circles, which are usually made of drill rod and rest on top of the plate over the rubber pad. The length of the pins should be just so the top of the die pad comes flush with the top of the die, so that the punch will have action as soon as it comes in contact with it. Small sections of rubber are also built up under the die pad or blank holder. One advantage of the small sectional forms is that they will not settle and lose their resiliency like the larger piece of solid rubber, because the small sections are of better quality. The rise of section also makes it convenient to build up the pressure pad until the required size is obtained. The section can be utilized on different dies, but it is always best to have a piece of 1 inch thickness of flat rubber for all new dies. Rubber is also used for the top knockout pad where it is not possible to use the standard knock-out in the center of the ram.

Cartridge Clips — Every one is familiar with the cartridge clip which is made to clip the Model 1906 cartridges used in service for the Model 1903 Springfield and Model 1917 rifles. A multiple plunger press is designed to perform the six operations on the clip by means of a series of simultaneous operations. A complete body is produced at every revolution of the press. These presses are constructed in various styles and sizes, the number of plungers ranging anywhere from three to eight.

The spring which is put into the clip to lock and hold the cartridges in place is made from thin spring brass, which is shown in Figure 37. The forming of the spring and piercing of the locking ears are done in one operation, and when the clips and springs are finished they are assembled in a

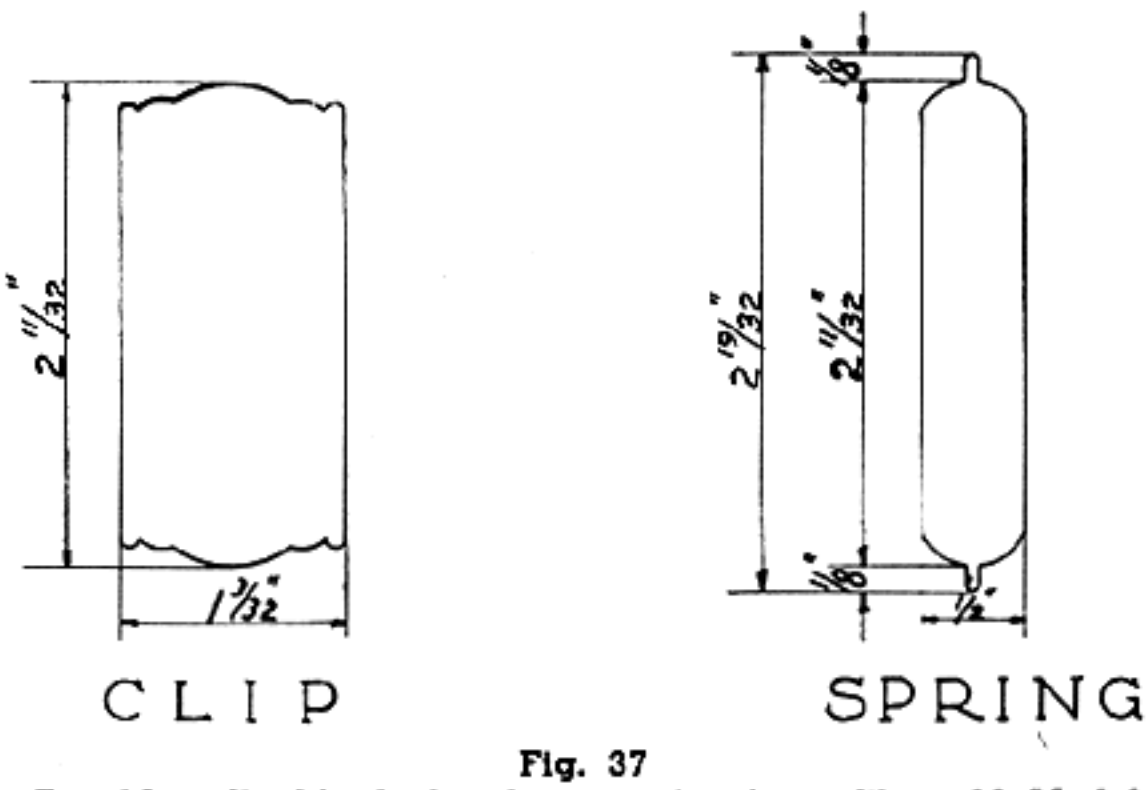

Fig. 37
Cartridge-clip blank development for the caliber .30 Model 1906 cartridge, showing clip and spring

special machine for this purpose. After they are assembled they go to a cartridge-clipping machine where five cartridges are clipped and the small ears at the end of the spring are turned over to hold the cartridges in place.

Figure 37 illustrates the blank for the clip as the first operation makes it on the multiple press. The blanking plunger is set one-half revolution in advance of the other plungers, so that the blank, after it is cut, is carried by the transfer slide over the first forming die before the plunger descends. This is accomplished by changing the position of the cam controlling the operation of the blanking plunger on the upper cam shaft in relation to the other cams. The plungers are operated by horizontal lifters, one lifter being provided for each plunger. These lifters are connected to rods, and knee pieces which connect the rods to the plungers effect their operation. The usual form of wedge adjustment is provided for increasing the pressure of the plungers, the adjustments being effected by means of wedges which lower or raise the bumpers as desired.

The clip is brought under each forming die until the six operations are completed; then the clip falls out into the truck. To give complete details of all the dies used to produce the clip and spring would require too much space; such an operation should go into a separate book on die work. This die-forming operation, however, will convey to the

reader what is accomplished in the manufacture of parts to make up the needs in the use of a firearm. The drawing of cartridge cases from sheet brass requires some very interesting tools and methods, as well as the bullets used with a cartridge case which will be described in future chapters.

Presses and Feeds — Power presses for producing articles or parts made from sheet metal have become a highly specialized business. In addition to the economy of more rapid production, the application of automatic feeds to power presses assists in protecting the hands of the operators. More men are made cripples in this work than in any other where machinery is used; therefore, whenever possible, power presses are equipped with devices for automatically feeding the strip flat stock or blanks to the dies. Cartridge cases involve highly specialized work, and automatic feeds are provided on all machines so that an operator never touches the case to feed it into the machine. The types generally employed for such machines are the single and double roll, grip, gravity, push dial, and reciprocating feeds. The operator only has to keep the machine constantly supplied with the metal from which the punchings are made.

Butt Plates — The power press selected for the small shop where a number of operations are to be performed should be large enough to take care of any of the work shown here. Most of the parts used in the manufacture of rifles or shotguns are small; therefore a large press is not needed, but one with good die clearance should be chosen. As an instance, the butt plates shown in Figure 82, Volume I, are the largest stamping produced and the largest pieces made in the manufacture of firearm parts. The blanking die is made reverse, the punch being secured to the bottom shoe, while the die is fastened to the top pad. Two punches are placed in the proper location for the screw holes and a knock-out is used to eject the blank from the die by a mechanical means as the press ascends. Since the punch is of the correct outline of the blank, two holes are drilled and taper-reamed from the bottom of the punch to pass out the punched slugs. There is usually a 4- or 6-inch round hole in the center of the bolster plate for the passing of stamped parts or various other purposes. If this is not provided, parallels should be fastened on the bottom of the die shoe between the slug holes—large enough for the slugs to be removed at will. A scrap stripper encircles the punch to remove the scrap stock of the punch by means of rubber or springs.

After the blanks are stamped out a forming die is made to give the butt plate the exact contour both in width and length and at the same time to turn up the small pointed ear at the heel of the plate. This forming die is one of the most simple to construct, as the die is made to the exact outlines of the plate and provided with a pressure pad. The punch is made for the inside form of the plate; consequently when pressure is provided with air or rubber, the plate is in position and when it strikes the bottom of the die shoe the exact form is produced. The pressure compresses the air cylinder or rubber, and the pressure pad returns to its flush position to remove the formed plate; then another one is inserted.

Pistol-grip Caps — Because of the similarity in operations, a pistol-grip cap is made the same, except that a grip cap will have ragged edges caused by the deep draw and form; therefore, a trimming operation must occur after the forming operation. There are two methods which may be used; one is to make a blanking die near to the required size; the second, which is practised extensively, is to shear square blanks from the desired thickness of material and form them, allowing only enough material on the sides to trim after the form is made.

A trimming die is made similar to a blanking die, except that a pressure pad is made and the caps are trimmed upside down. The form in the pad is similar to the pressure-pad form used in the forming die. An outside stripper encircles the punch to remove the outside scrap, and since a rubber is used to control the pressure pad, the trimmed cap is returned to the surface to be removed by mechanical means or with a knock-out in the operator's hands.

Correcting Mistakes in Dies — Should the die maker, through misunderstanding or carelessness, make the opening in a die too large at any point, he should not attempt to peen the steel cold. I have often seen this done, and while it is possible to do so and then finish the surface in such a manner that it will scarcely be noticeable, the tool steel directly below where the peening took place will almost surely crack at some time during the life of the die. Should the mistake referred to occur, heat the die to a red heat, when the steel may be set in without any injury whatever. When setting in, a regular peening punch is used. If there is any objection to disfiguring the top surface of the die, this method cannot be used. It is never good practise to bend, set in, or otherwise alter the form of the steel when cold if it is to be hardened, as such attempts nearly always end unsatisfactorily.

When a die becomes so worn that the openings are too large or the top surface near the edge of the walls of the opening are worn so that the die is "bell-mouthed," it may be heated to a red heat, set in with a large-sized peening punch or a punch of the desired shape; after this it should be annealed, which necessitates reheating. After annealing it is reworked to size. This reworking, when care and judgment are used, gives excellent results; it also effects a considerable saving, as otherwise it would be necessary to make a new die, while the die may be reworked at a fraction of the expense of a new one.

Punch Troubles — Small piercing punches which have annular marks left on them from turning or polishing are much more liable to fracture than those having marks which run parallel with the punch, especially when perforating heavy stock. This is due to the fact that the metal presses into the minute lines left by the turning tools on the lathe, thus increasing considerably the force required for stripping. As is generally known, most punches when used on heavy metal are broken while in the act of stripping the stock and not when piercing it; consequently, the stripping should be made as easy as possible. The stripping may be facilitated by turning the punch slightly tapered toward the top, but this is not practised on small punches because the strength of the punch would be reduced too greatly. If a stripper plate is not parallel with a die, it will also cause broken punches. Even tho the error in alinement is small, the constant bending action that the punches must undergo every time the stock is stripped tends to shorten their life.

The making of small piercing punches requires attention to the most minute details in order to secure satisfactory results. It sometimes happens that the blanking punch or certain piercing punches are of such a shape that they tend to incline to one side and cause shearing when passing through the metal, thus injuring the edge of both punch and die. This is caused by the shearing thrust not being equal on all sides. For example, the shearing strain from two long sides sometimes crowds the punch over toward the shorter side. To prevent this the face of the punch should be ground to a slight angle so that it enters the shorter side first; then this side will be backed up by the die to take the thrust when cutting the remaining part of the blank.

When a die has a number of punches or even three or four, some very small punches and even some large, it is often advisable to make the large ones $\frac{1}{32}$ inch longer, or long enough to pierce the material and just enter the die before the small ones touch the metal, especially when the stock is heavy. It is also advisable to drop the punches below the die surface or the thickness of the material so that the blank will be well supported before the punches take effect. It is also necessary to place a slight shear on small punches, facing the long part of the blank. The small angle ground should be both ways, allowing the punch to be high in the center. On large punches the shear should be four ways. Figure 33 illustrates the two methods, together with a shear on a die.

Stop Pins — The stop pin on a die is a device for controlling the position of the stock as it is fed through for each successive stroke of the press, so that the spacing of the openings cut in the material will be uniform and a certain distance apart. The design and adjustment of stop pins for blanking dies is an important point to be considered, for it affects both the quality and quantity of the output of a press. There are many different types of stop-pins, such as the plain fixed stop-pin, the bridge stop-pin, the simple latch, the spring-toe latch, the swing latch, the positive heel-and-toe latch, etc. These devices, with the exception of the first, may be used with either hand feed or automatic roll feed. The ideal output of one blank for every stroke the press can make in a day is never realized with single dies; delays arise from many sources, and they have to be eliminated so far as they contribute to unnecessary expense. In addition to improper design and poor adjustment of stop-pins, other causes of poor output are: lack of skill, inconvenient arrangement of the new material, the blanks and the scrap, inefficient methods of oiling the stock, and poorly made or poorly designed dies. A skilful operator will usually arrange the material distribution very well, but the design and the adjustment of the dies together with the stop-pins generally fall upon the die maker.

The use of dies in the manufacture of rifle accessories can often be turned into profit by the owner of a small shop. It gives a profit not only to him, but also to those who are seeking knowledge in the construction of tools to work sheet metal to the best advantage. Study most of the articles sold by a hardware store and count the number made by die work; also disassemble some of our cheaper arms, and you will be surprized to find how many parts are made by dies, making it possible for the manufacturer to place the product on the market at a price to suit the man or boy with only a limited sum to spend.

Throughout this chapter suggestions ha
offered to illustrate the possibilities in di

and to convey to the reader their part in the making of firearms. It may seem useless to many to study die construction and its details, but probably such information will create new ideas in the mind of the young mechanically inclined person. A general knowledge of die construction, broad enough to make one familiar with those features which have proved successful in firearm construction, may be acquired by studying as many different designs as possible.

CHAPTER V

Whims and Fancies in Firearms

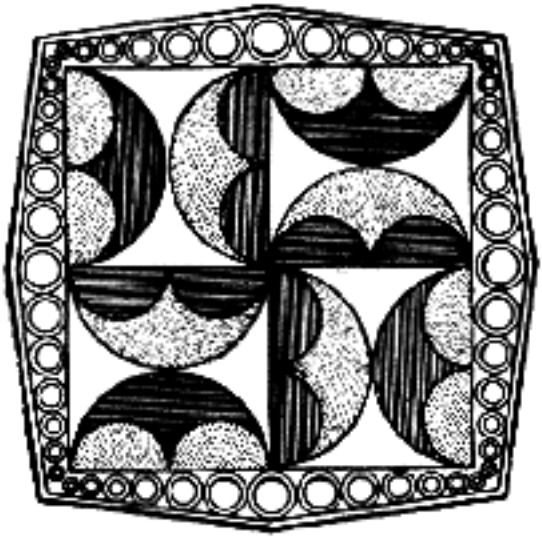

CHAPTER V

Whims and Fancies in Firearms

PSYCHOLOGISTS tell us that the best way to get something we want is to concentrate on it. This doesn't mean assuming the pose of The Thinker or waiting for a genie to drop the ideal gun into our lap; nor does it mean to isolate ourselves from friends and family, and pore over books and catalogs. And above all, do not say, "I cannot afford this gun because I or we are going to need this money next year"; instead, think and act positively. Spend for your hobbies now, and determine to make more money next year, for hobbies are just as important to our success in life as anything else. To hit a target you must see it; to arrive at any point, you must keep your eye on it, and make a course toward it in as straight a line as your eye follows to the black of a bull's-eye.

A gun is made to be used and for the purpose intended. Exclusive reasons prevent me from giving unfavorable or even favorable opinions concerning arms of various makes; moreover, arms are selected from personal choice, and not from the standpoint of deserving merit. Any one choosing a firearm must select it from the related equitable precedent.

The difficulty of determining merits of the modern rifle or shotgun which is offered to the buying public may be judged only after an analysis of the descriptive catalogs issued by the various arms companies. The inexperienced person who contemplates providing himself with a rifle or shotgun may well be excused if he find himself lacking sound knowledge in attempting a decision. If in his confusion he seeks the advice of others whom he believes familiar with the subject, it is altogether probable that they may add to his confusion; very few men have opportunity for making comparative tests of a variety of arms. He will in such case naturally decide upon a gun whose particular adoption is most strenuously urged.

To begin with, the prospective buyer today will find a large choice of excellent arms, and keen competition is a guaranty that for the present a high standard will be achieved. Materials and workmanship may be depended on to maintain the public's confidence. Cheap arms only satisfy a certain demand, and the true gun lover will soon or late understand that "he only gets what he pays for." Perfection in all details can be obtained only in the best-quality arms, and it is for the individual to find it in a specially made-to-order weapon. It cannot be expected in a factory product.

In attempting, however, to give some practical suggestions which may be a service, it may be best to confine myself to the explanation of various principles whose application may be the chief desiderata.

If a gun is for target shooting with the greatest possible precision, nothing is so desirable as the .22 rifle for the beginner. There are so many good arms of both foreign and American make that it is best to study the various ones from observation at some of the large meets such as those held at Sea Girt, New Jersey, and Camp Perry, Ohio. All kinds of rifles and special barrels can be found in the hands of some of our experienced target shots.

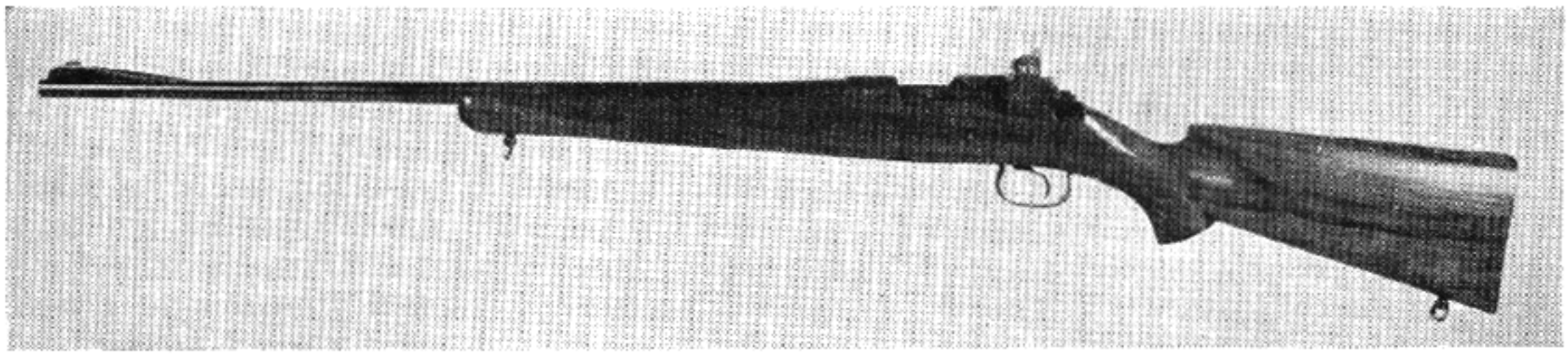

Fig. 38
Model 52 Winchester caliber .22 rifle: original stock remodeled; barrel cut to 24 inches; muzzle reduced to 0.56 inches. An ideal arm for the woods

When a rifle is to be constructed, the first consideration is weight and striking energy of ammunition, and this is a question as old as the development of high-velocity arms. A gun's principal function is to strike a blow on an object, and, as a general rule, the heavier the striking energy of a bullet the more efficient will be the weapon. The sportsman in selecting an arm must choose between the labor of carrying it and the efficiency of the arm itself when fired. He must consider the importance of relation between rifle, weight, and striking energy of the most popular bullet.

A double rifle can be fired with two quick shots, either both barrels together, or one shot following the other with lightning speed so as to make the second shot almost as good as the first. The design of such a rifle supersedes the magazine type, and in proportion to striking energy and weight has the energy of two bullets. The design principle of a double rifle has given way to the over-and-under development seen in our best shotguns. This was a fancy based on sound judgment.

Before a description is attempted of the methods of calculating the pressure and velocity of a given combination of rifle and cartridges, let us carry ourselves afield and understand the relation between location and other factors. Choice of an arm must always depend first on the type of animal you expect to shoot, second the country you are going to hunt in, and lastly, on principles of experimental methods.

Big game animals can be placed in two general classes: dangerous and non-dangerous. The dangerous game can be subdivided into two classes: thick-skinned and thin-skinned animals. All non-dangerous game is thin-skinned. As far as the big game shot is concerned, we have these classifications of animals: dangerous thick-skinned, dangerous thin-skinned and non-dangerous thin-skinned. I am inclined, however, to place elephants in a class by themselves.

The usual range of long shots—that is, long shots from the sporting point of view—will be, as a rule, anything from 50 to 300 yards; in rare cases it may be more. However, I always place 300 yards as the normal limit at which sporting rifles should be sighted. The game usually found on a long-range shot is of the non-dangerous thin-skinned sort, and consequently great weight of metal is not of primary importance. In this form of shooting the chief difficulty is that of judging distances, and for this reason a flat trajectory is a desideratum in any suitable rifle. On this account your choice should fall either on the .30-03 or a magnum small bore, where the flatter the trajectory the better. A flat trajectory naturally demands a very high muzzle velocity, and for this reason a rifle developing a muzzle velocity of over 2900 feet per second should always be chosen. It is a mistake to sacrifice bullet weight wholly to velocity, as a very light bullet breaks up all too easily when it strikes a bone; 150 grains is the absolute minimum limit of safety. In saying this I am not forgetful of some of the latest cartridges, in which an 87-grain bullet is discharged with a tremendous velocity. A price must always be paid for velocity, however, and it is safer to decide in favor of a bullet of 150 grains or over, and a velocity from 2750 to 3200 feet per second. Such a combination will provide trajectory to bring the line of sight so close that the bullet is nowhere above or below it for more than 2½ to 3 inches up to a range of 200 yards, and even at 300 yards the drop will only be 7 inches. This trajectory is as flat as one would want, and it is provided by a weapon which is handy to use and very efficient against game.

Contrary to general opinion, I am not a great believer in an extremely light rifle in the magnum class; but naturally this aspect of the matter must depend largely on individual physique. In countries where one has to carry one's rifle oneself this point must be considered well, for an 8½ to 9 pound rifle is found a detriment at the end of a day's hunt. One should choose weight of arm as well as other factors, so the first essential in the rifle is that it should be well within one's strength to carry all day and every day. Men vary in physique, and on this account it is impossible to lay down any rigid rule. It must, however, be remembered that a gun which seems light and easy to carry and handles well in the gun shop, may seem heavy and leaden when tried out after many hours of tramping in an open range country where the sun may be as hot as in a tropical climate. For this reason it is always better to "under-gun" than to "over-gun" oneself, because the majority of men shoot better with a rifle well within their strength at the time when they want to use it.

After weight the next question to be considered is stopping power. Game may be both heavy and dangerous, and on this account plenty of weight in the bullet is essential. Here I regard 220, or better still, 250 grains, as the lightest weight to be used, and the more the increase over 300 grains the better, from the point of killing power.

Since shots are very seldom taken at over 200 yards, a very high velocity is not necessary. In fact, it is so far from being unnecessary that it can be regarded as a mistake, because high velocities are only obtained at the expense of bullet

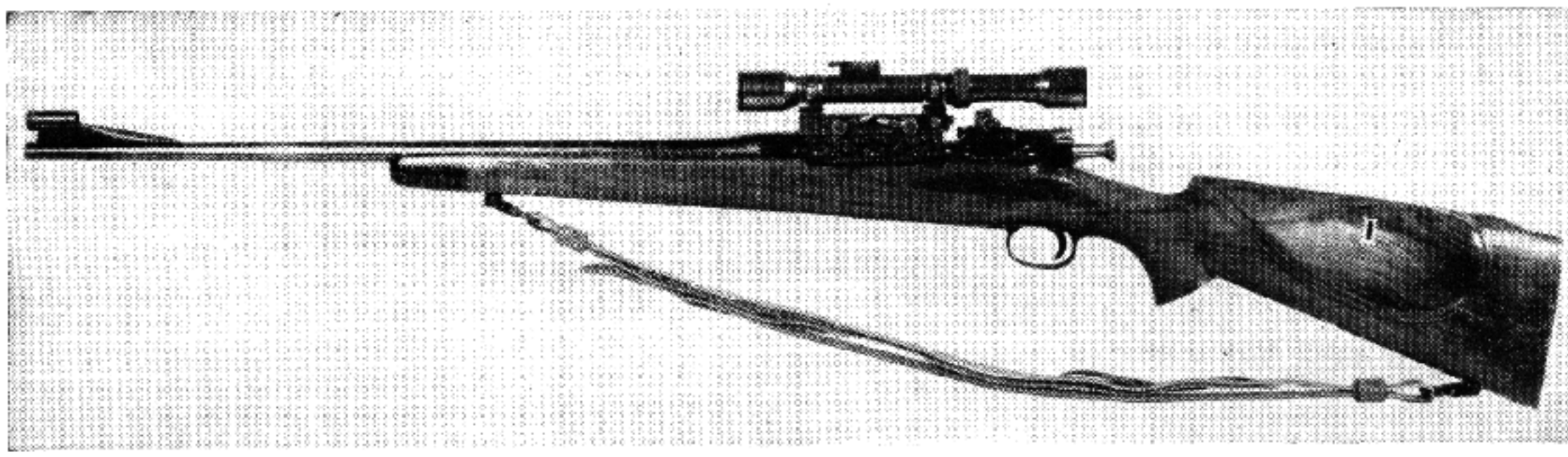

Fig. 39
Caliber .30 Model 1903 Springfie'd, remodeled. An ideal arm for the North American Continent, designed for Mr. William Palmer, Jr.

weight. There has existed in my mind for years the belief that the whole tendency in recent development of sporting arms is too strongly in the direction of velocity at the expense of bullet weight. In the United States, or even Africa, a velocity of 2100 feet per second to 2400 feet per second is high enough.

Many men are using the wrong rifle or even the wrong ammunition, and have chosen thus from unreliable recommendation and alluring advertisements. The sportsman who would do real hunting should accustom himself to one good gun. Study it thoroughly until you know just what can be done with it under different conditions. Since the government's admirable development of the Model 1906 ammunition and the cartridge companies' development of suitable game bullets, we have some highly commendable cartridges. Some day some one is going to make a flanged cartridge case in the .30-06 class adaptable to the over-and-under principle of design, and light in weight, and then a perfect combination of cartridge and rifle will be born, adequate for any game roaming the North American continent.

The question of weight and balance will arise in some minds. The weight of any rifle consists mainly of the metal used in its construction. The composition of the metal used in barrels is made for the purpose of resisting the high pressure of the explosion. The powder in the cartridge is expanded in every direction except one—directly forward. The crushing expansion is divided between the action and barrels. The mechanical design of any well-made receiver keeps the breech securely locked; that in the barrels not only confines the gases from the powder, but decreases in proportion to length of barrels until all energy is absorbed by the bullet. Such a force directs the course of the bullet. A very important consideration then is barrel construction in the direction of strengthening to such a degree that it will not cause undue inaccuracy under pressure.

It is very surprizing to know how little metal is required in a barrel, except at a given distance from the chamber, to prevent undue expansion. A wall thickness of $\frac{1}{16}$ inch can be made at the muzzle and still hold its form. This is only in the nature of an experiment and not recommended in good barrel design. Fifty thousand pounds' pressure per square inch or more may develop at the breech, but at the muzzle it reduces itself to less than 10,000 pounds per square inch. Since this is an established fact, we must turn to recoil. One object of weight in a large-caliber rifle is to take up a portion of recoil, and as added weight absorbs this, it prevents undue body shocks under fire. In barrels of ordinary design in firearms the highly developed steel far surpasses the necessity to withhold the bursting effect of the developed charge, but because of the design adopted they are all made alike; those who purchase one must accept a standard product.

The modern sportsman who chooses wisely and who goes on a hunting trip each year in Canada, the United States, or Mexico, will be interested in the following arms:

A caliber .30 rifle using the Model 1906 cartridge for bear, elk, moose, mountain sheep, mountain goat, and caribou. Weight about 7½ pounds, barrel length between 22 and 24 inches; 22 preferred.

A 6.5 or 7 mm. rifle made on the Springfield or Mauser action, for deer. Barrel length between 21 and 23 inches. Can also be used for bear, mountain lion, etc.

A Model 1903 Springfield sporting type of rifle equipped with aperture and telescope sights for target shooting.

An M-1 .22-caliber Springfield or Model-52 Winchester for the same purpose.

A repeating .22-caliber rifle using the .22-caliber long rifle cartridge for squirrel and other small game.

A single-shot rifle of high velocity, such as the .22 W. C. F., known as the "Hornet," or the .25-20 W. C. F. cartridge for groundhog, crow, turkey, prairie dog, etc.

A 20-gauge shotgun for birds and small mammals; also a 12-gauge shotgun for duck and geese.

For revolvers, a .22 and .38 caliber special for target work, both guns made on the same frame, preferably by the same maker.

All these guns may be considered absolutely essential to the full enjoyment of the sportsman. Altho some may be made to do the work of others with more or less unsatisfactory results, the rifleman can carry but one at a time; still he will often wish he had one of the other guns. Excellent shooting is usually the result of selecting one gun, utilizing it to its true efficiency, and not collecting a multitude of arms which prove worthless in the end.

This can be true only to a limited degree and

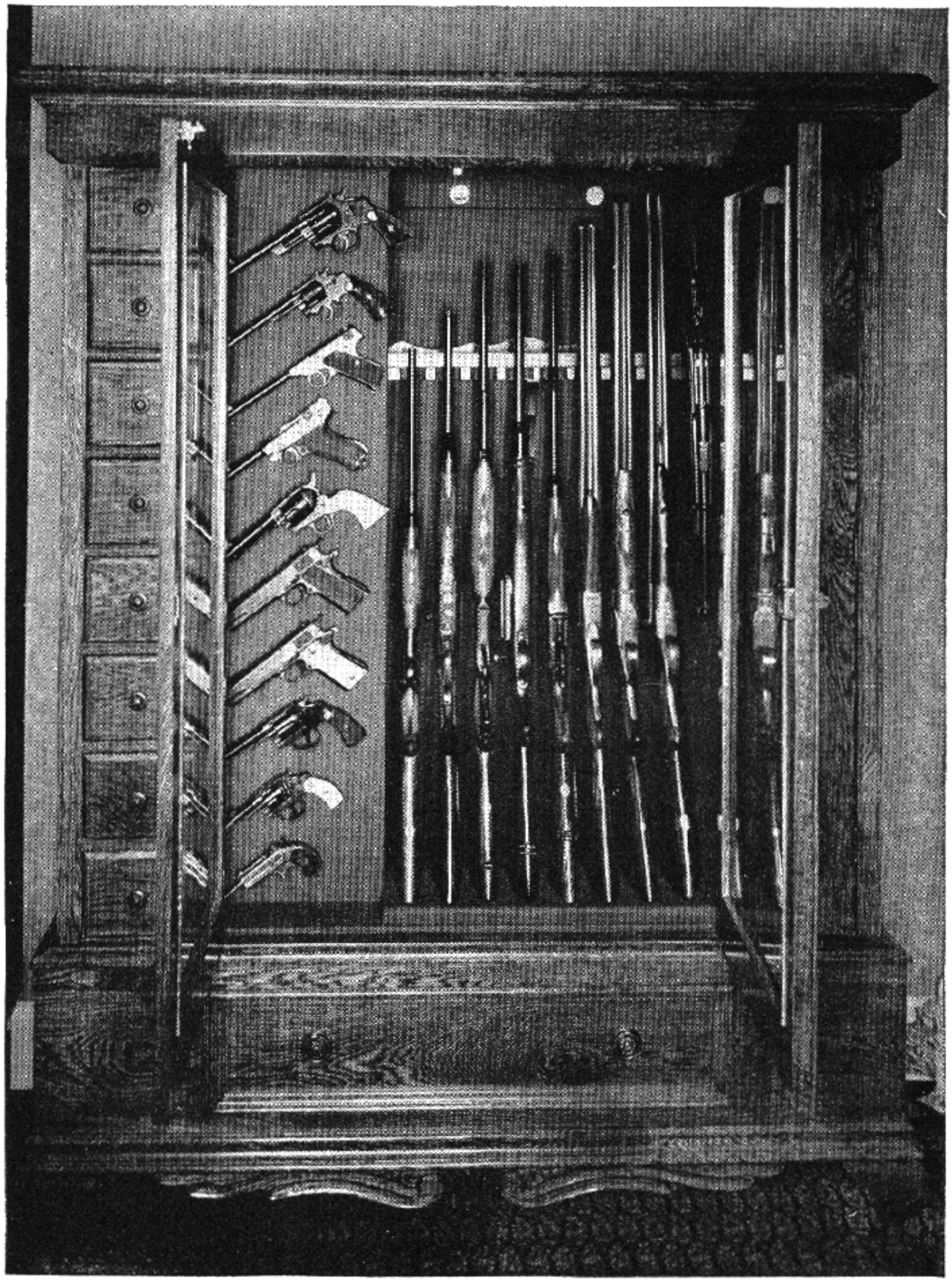

Fig. 40
Gun cabinet designed by Mr. Lee D. Elliott. Entirely constructed of oak. Note the two electric lights above the rifles and shotguns

requires an explanation. Should an experienced rifle shot or marksman take an arm to which he is unaccustomed, that is, before he learns the true relation of its line of sight at a given range, he can not expect to do any remarkable shooting. However, it is easy to aline sight settings by a little practise, and having done so, he may very soon decide the accuracy of the arm. Any experienced rifle shot, by firing a few rounds from an elbow and muzzle rest, can satisfy himself and others as to whether an arm shoots true and uniform groups. If the shots strike all over a hundred-yard target, it is evident that the rifle is inaccurate. I have often tested beautifully finished arms whose attractive appearance would persuade the inexperienced person to add them to his collection. After testing such weapons it was impossible to keep all the shots in a 12-inch circle at 100 yards, and it is needless to add that such arms are only for collections. I have learned to be wary of very ornate arms having no maker's name.

Fig. 41
A Parker Brothers shotgun

Stocks — The question, "How do I know when my gun fits?" is as old as gun history. There are many men today who do not know the answer, and it is for their benefit that books like these are written. From having studied Chapter VIII, Volume I, the reader has learned that it is a matter of securing a direct understanding of the correct "stance" in a testing trial of a gun and its stock.

It is much better to have a stock too long than too short, or a comb too high rather than with too much drop. In either case alterations can be made which are not difficult. If the stock is entirely too long it can easily be reduced with the use of a hack-saw, and the old butt plate refitted. If the comb should be too high, any one can take a fine wood rasp and a mill file and reduce the height of the stock until the line of sight is directly parallel with and at the proper height above the sighting plane. But if the reverse condition should exist, a rubber recoil pad can be fitted to lengthen the stock. To secure a higher comb, it must be built up, and this is not so easy.

If in your aiming test you have noticed that the line of sight passes to the left of the rear sight or favors the left side of the sighting plain, the stock needs more cast-off; or if the comb is full and well rounded it can be made much narrower with a file. This will be a necessity in most instances where the angle of one's jaw is full and the cheek rather fleshy.

I am of the opinion that a person whose face is of the average proportions, and full, needs no cheek piece; but one who is building stocks cannot al-

Fig. 42
Special 12-gauge Greener trap gun made on a heavy Martini action

ways dictate to a customer who admires a perfectly symmetrical shape and the ease of holding it. With a stock having too thin a comb or too much cast-off the rifleman loses that feeling of security and confidence that a full well-rounded comb gives. Contact at the comb gives a positive guide to uniform elevation and eliminates one of the faults of gun pointing, frequently the cause of wild shots in an otherwise good target.

Fancies originate not so much from the standpoint of factory production as from the ideas of men who study the subject from guns in their collections. These collections are quite costly, and especially so is the experience before one learns proper selection. To get acquainted with various makes of arms, be a frequent visitor to a well-stocked gun store; not so frequent that you become a pest, but be a keen observer. Catalogs from the various makers will also help you decide about your particular fancies.

Ammunition — Every hunter worthy of the name has probably had the high-velocity or speeding-up-the-bullet idea. Wisdom born of proper training in the game field, however, leads in a contrary direction. Many men who have a fancy for high-velocity ammunition will soon or late come to the conclusion that, with present bullet construction, velocities cannot be greatly increased; for then it is impossible to make the most reliable kills. Trajectories, of course, are straightened to a certain extent, but our kills are only at short range —no greater in most instances than 200 yards. If we are fully to utilize the tremendous velocities now possible with modern military powders, new forms of bullets must be designed which will stand up under greater pressure and equal the killing power of our present design in round-nose bullet form. When velocity is increased, the jacket must also be increased in proportion, so that it will not fly apart upon impact with animal tissue or heavy bone.

Tests of bullets on 7/8-inch pine boards or other material such as brick, rock, etc., explain very little. Make a survey of the development of sporting-rifle ammunition in the United States since 1920. We find that, with very few exceptions, the manufacturers have wisely refrained from flooding the market with too many new types of bullets. Greater development has been seen in powders, non-corrosive primers, gilding or copper-alloy bullets; this sooner or later will lead to better-designed projectiles.

Some men prefer to spend their money on almost anything rather than a good rifle for themselves, with which they could not only enjoy the sport with good kills, but at the same time arm themselves with a reliable instrument of defense in a time of need. On the North American continent things are very different from what they are elsewhere, where one must choose the perfect combination, making the proper selection of ammunition first and then the proper rifle to use it in. We can travel from one end of the world to the other and find a vast number of obsolete arms in use, none of them made for their present uses.

Sights: Telescope and Metallic — To choose a sight is like deciding on stock measurements. In this instance, however, it is the eye that must be fitted instead of the physique. A good telescope sight has certain advantages over open or metallic sights, according to the purpose of design. One of the main advantages of a telescope sight is clearness of vision and accuracy of aim, provided one is a good holder. The first of these are clearly and easily demonstrated. A hunting telescope should be of low power. A low-power glass of the most finely ground lenses will give a clearer vision in all lights than ever possible with the naked eye, and naturally a brighter vision in poor lights. A telescope sight is a fine aid to good shooting and better yet when applied to a sporting rifle used in an open country and at long ranges. To select a telescope without reliable mounts is defeating the purpose of the telescope; or if suitable protection is not provided for transport of the telescope it is just a useless expenditure of money. Never rely on a telescope alone on any rifle; suitable metallic sights should also be provided. Apparently some men wish all their sights on their rifles at once, such as the telescope, open, and aperture.

Sights for a target rifle include telescopes and aperture for both front and rear. The person who purchases a telescope is very anxious to procure

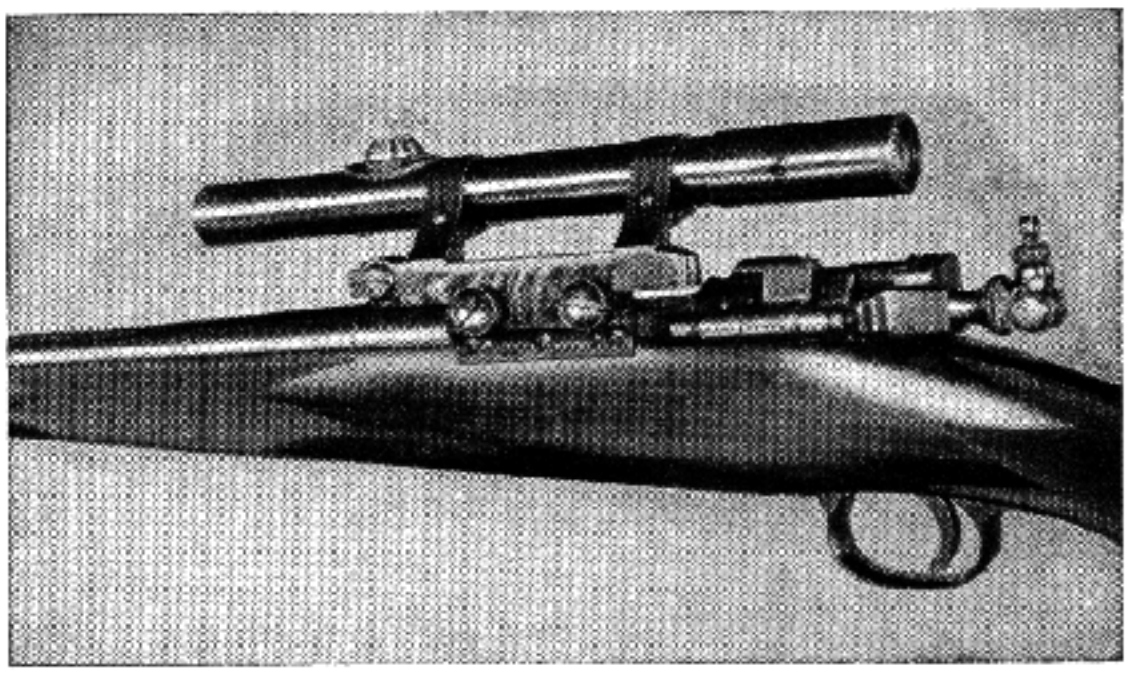

Fig. 43
Zeiss telescope and Niedner mount. Lyman aperature sight mounted on cocking piece, an ideal combination when two sights are desired

the best, not only in price of instrument but in power as well. Many figure that if a telescope of 2¾ power makes an object appear distinct, one of 4 power makes the object twice as clear and brings it so much nearer. Other elements enter into this, however. Altho a 4-power telescope magnifies an object one and one-quarter times more than the 2¾ power, it cannot be made the same weight and size as the other without reducing the field. You must also understand that a higher power multiplies the error of aim; you realize you are not the steady holder you thought you were when you used a telescope of 2¾ power. Therefore, to avoid the embarrassing and unpleasant dancing of objects, the sportsman is compelled to use a lower-power instrument. The "field" is the width of the surrounding landscape taken in by any telescope, and the field grows less as the power increases; in choosing the ideal instrument you must select both field and light-absorbing power. The field will allow you to pick out quickly any game that may be standing more or less concealed; and you can use it in the failing lights of evening or early morning.

With the matter of power, field, and light intake settled, the prospective fancier of a telescope should see that the instrument selected has the correct field for its power. The importance of the greater field is appreciated only by those who have used these sights on game.

The "cross-hairs" or what is commonly called the reticule should be a picket-pointed post running up and terminating at the center or just over the horizontal posts. The point is alined on the spot to be hit while the horizontal hairs are not shadowing the object. The old reticules having fine cross-hairs similar to the target telescope have been superseded by the more substantial designs of heavy pickets to withstand the heaviest recoil.

Aperture sights have become the accepted standard in metallic sights because better results are obtained on target work; but for a hunting rifle we must or should vary our standards to suit a particular location where open or telescope sights would be the most advantageous. The design of notch in a leaf sight preferred by different men varies so greatly that it is really difficult to know or even to recommend the correct form for all conditions and all kinds of eyesight.

After noting the various sights listed in any catalog or even given in this book, you will understand that fancies vary because we do not all have the same eyesight. We must continually strive for betterment in sight design to suit different men's vision and to make shooting a pleasure for all of them. Even tho some may have lost the sight of one eye, different aids may be brought forward for those so handicapped.

Experienced mechanics are often asked to carry out impossible ideas. A gun embodying the designs of all guns in one has been made and sold—the three- or four-barreled gun, for instance. Men who have the capital to invest in such a gun do so for no other reason than to have something different. These guns are only for those who need to carry a gun for all purposes, to be ready for all kinds of game and any emergency which may arise. In other words, they are made only for the novice and not for the practical and experienced hunter. Sellers of such arms will explain to amateur sportsmen: "Here is a gun for big game and a shotgun for feathered game, as well as a small rifle for small animals. Three guns in one with four barrels!"

A two-barreled gun known as the Cape rifle was designed for a country such as Africa, and when placed in the hands of the experienced hunter it will provide ample protection when needed. Beginners should remember that to be successful as

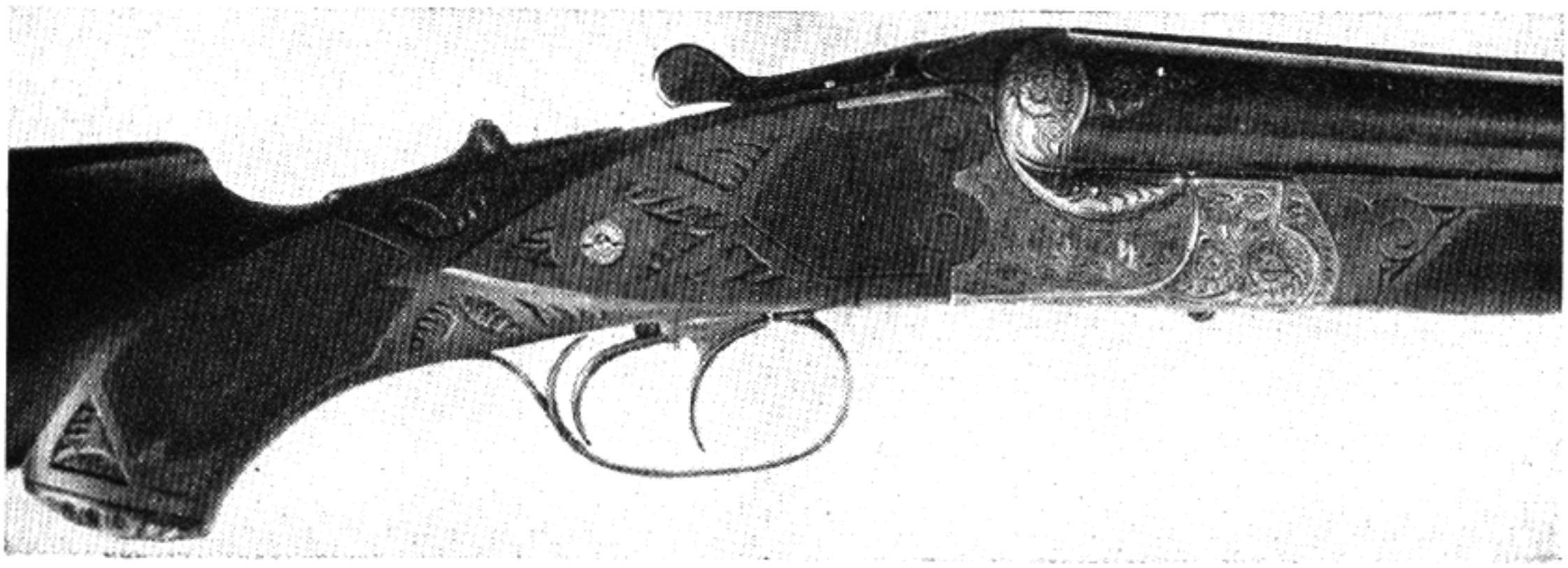

Fig. 44
Three-barrel gun of German make

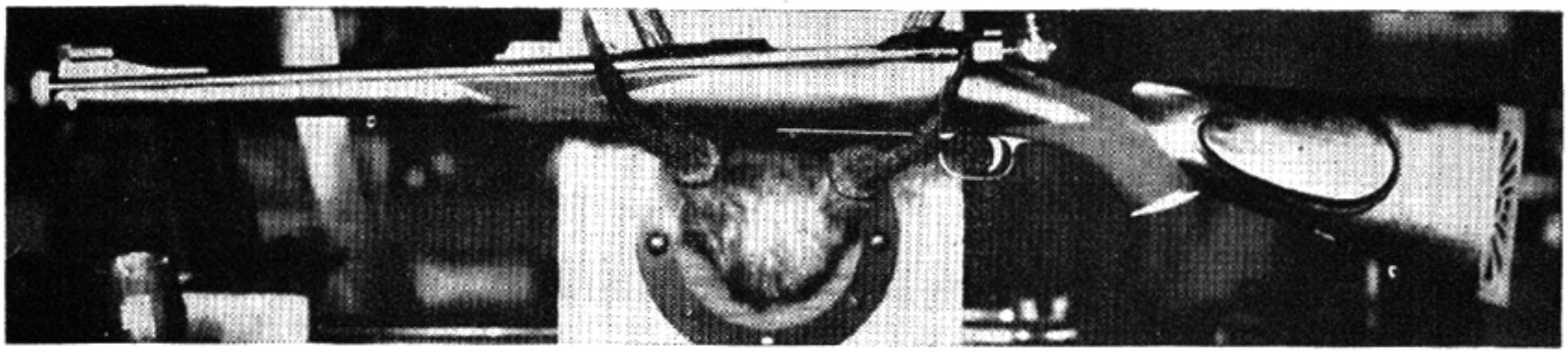

Fig. 45
Springfield Model 1903 rifle designed for Mrs. Charles G. King. Eighteen-inch barrel, "Mannlicher type." An arm well adapted to the saddle scabbard

a hunter, one must go out for one thing and not vary the bag; as a rule, if one follows up one kind of game for the day, the bag will be greatly increased. What the amateur sportsman wants to know is where to shoot and what to shoot with.

The average individual is like a boy with his first gun. To him it is an amazing mechanism and the most real and cherished possession he can own. All is as it seems on the surface—and all arises from the surface. He dreams, "What I can do with it!" The average unthinking person lives in a maze of mysteries which he calls his life; the unexpected is always happening to him. The expected and longed for happens but seldom, and when it does, he doesn't know how or why. He no more attempts to understand the laws back of his life dreams nor tries to figure out how a gun was made, than the small boy. He just takes it for granted and enjoys it after a fashion. We like the small boy who lives absorbed in the delusion that things are what they seem to be and who uses them without figuring the results. Science has shown us, however, that everything in the universe has some cause, and that the same cause always brings the same result. There are no accidents, nor are there any miracles performed.

I would not advise applying certain fancies I have named to a firearm except practically. So many ideas are advanced that are neither practical nor possible. While in charge of the experimental department at the Arsenal I spent many amusing hours reading the Patent-Office reports. A few ideas were good, but the majority showed that the inventors allowed convictions to get the better of common sense. They believed the thing was good and spent good money on the idea in order to have such a fancy patented and satisfy a whim. A personal fancy is a capricious liking formed oftentimes without reason or exercise of judgment, particularly in gun work, and it is likely to fade as quickly as it was formed.

Fig. 46
Springfield floor plate. Moose and bear in gold. High relief engraving

CHAPTER VI

Principles of Iron and Steel

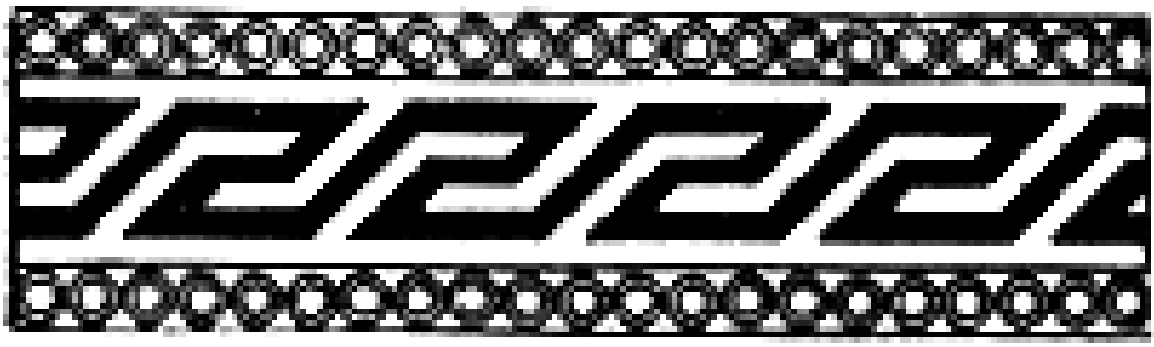

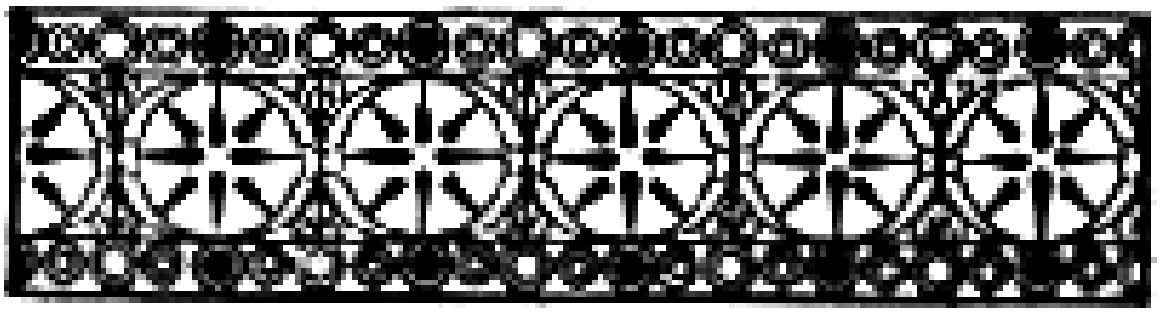

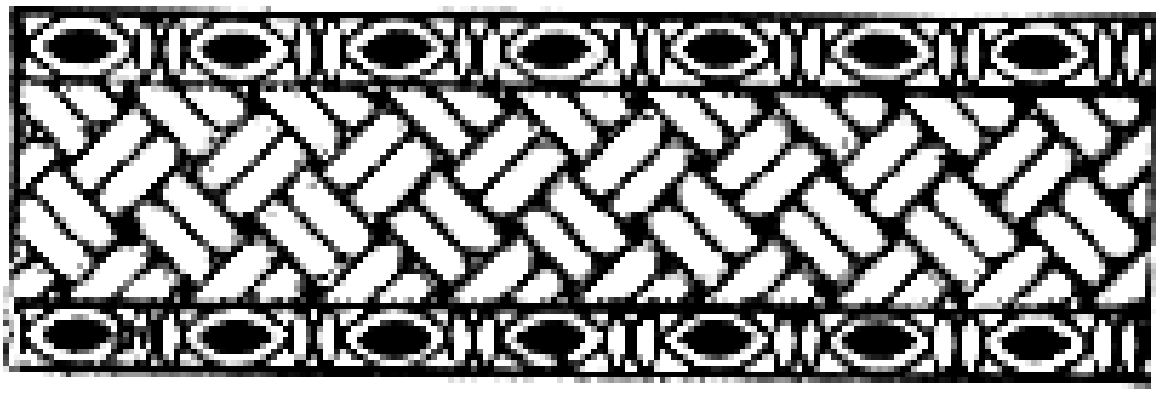

CHAPTER VI

Principles of Iron and Steel

THIS subject, if treated in technical terms, would fill a volume alone, so I shall only give a brief description of the principles of iron, the basic foundation of all steels. Let me first give definitions of iron and steel which should be known to the beginner.

Alloy Cast-irons — Irons which owe their properties chiefly to the presence of an element other than carbon.

Alloy Steels — Steels which owe their properties chiefly to the presence of an alloy other than carbon, such as nickel, chromium, molybdenum, tungsten, manganese, vanadium.

Basic Pig-iron — Pig-iron contains so little silicon and sulfur that it is suited for easy conversion with steel by the basic open-hearth process. (Restricted to pig-iron containing not more than one per cent of silicon.)

Bessemer Pig-iron — Iron which contains so little phosphorus and sulfur that it can be used for conversion into steel by the original or acid Bessemer process. (Restricted to pig-iron containing not more than 0.10 per cent of phosphorus.)

Bessemer Steel — Steel made by the Bessemer process irrespective of carbon content.

Cast-iron — Iron containing so much carbon or its equivalent that it is not malleable at any temperature. It is recommended to draw the line between cast-iron and steel at 2.20 per cent.

Cast Steel — The same as crucible steel; obsolete and confusing.

Charcoal-hearth Cast-iron — Cast-iron which had its silicon and usually its phosphorus removed in the charcoal hearth, but still contains so much carbon as to be distinctly cast-iron.

Converted Steel — The same as blistered steel.

Crucible Steel — Steel made by the crucible process irrespective of carbon.

Gray Pig-iron and Gray Cast-iron — Pig-iron and cast-iron in the fracture of which the iron itself is nearly concealed by graphite, so that the fracture has the peculiar gray color of graphite.

Malleable Castings — Castings made from iron which, when first made, is in the condition of cast-iron, and is made malleable by subsequent treatment without fusion.

Malleable Pig-iron — An American trade name for pig-iron suitable for converting with malleable castings through the process of melting. Treated when molten casting in a brittle state, and then made malleable without remelting.

Open-hearth Steel — Steel made by the open-hearth process irrespective of carbon contents.

Pig-iron — Cast-iron which has been cast into pigs direct from the blast furnace.

Puddled Iron — Wrought-iron made by the puddling process.

Puddled Steel — Steel made by the puddling process, and necessarily slag-bearing.

Refined Cast-iron — Cast-iron which has most of its silicon removed in the refining furnace, but still contains so much carbon as to be distinctly cast-iron.

Shear Steel — Steel usually in the form of bars made from blistered steel by shearing it into short lengths, and piling and welding these by rolling or hammering them at a welding heat. If this process of shearing, etc., is repeated, the product is called "double-shear steel."

Steel — Iron which is malleable at least in some one range of temperature and in addition is either (a) cast into an initially malleable mass, or (b) is capable of hardening greatly by sudden cooling, or (c) is both so cast and so capable of hardening.

Steel Castings — Unforged and unrolled castings made from Bessemer open-hearth crucible, or any other, steel.

Washed Metal — Cast-iron from which most of the silicon and phosphorus have been removed by the Bell-Krupp process without removing much of the carbon; steel contains enough carbon to be cast-iron.

Weld Iron — The same as wrought iron; obsolete and needless.

White Pig-iron and White Cast-iron — Pig-iron and cast-iron in the fracture of which little or no graphite is visible, so that their fracture is silvery and white.

Wrought Iron — Slag-bearing malleable iron which does not harden materially when suddenly cooled.

The above information will convey to the student a clearer understanding of how the different forms are classified, and he can gain the required knowledge to know what should be used. A further explanation of steels commonly used in gun work is necessary, as I have often mentioned tool steel, machinery steel, cold-drawn steel, etc., in these pages. Naturally, the beginner will not definitely understand such terms, and the only satisfactory method is to make them clear and to point out their proper application. In the automobile industry the requirements for different steels have reached a high degree of perfection, so we will select our steels from their specifications, which are known as the S. A. E. (Society of Automobile Engineers) standard and are given under various numbers, each suited to some particular part. I list these under their proper headings.

Carbon Steels

S.A.E. Steel No.	*Carbon Range*	*Manganese Range*	*Phosphorus Maximum*	*Sulfur Maximum*
1010	0.05-0.15	0.30-0.60	0.045	0.05
1015	0.10-0.20	0.30-0.60	0.045	0.05
1020	0.15-0.25	0.30-0.60	0.045	0.05
1025	0.20-0.30	0.50-0.80	0.045	0.05
1030	0.25-0.35	0.50-0.80	0.045	0.05
1035	0.30-0.40	0.50-0.80	0.045	0.05
1040	0.35-0.45	0.50-0.80	0.045	0.05
1045	0.40-0.50	0.50-0.80	0.045	0.05
1315	0.10-0.20	1.25-1.55	0.050	0.08-0.13
1050	0.45-0.55	0.50-0.80	0.045	0.05
1095	0.90-1.05	0.25-0.50	0.040	0.05
*1350	0.45-0.55	0.90-1.20	0.040	0.05
*1360	0.55-0.70	0.90-1.20	0.040	0.05

* The silicon content for 1350 and 1360 must not exceed 0.30 per cent.

The 0.10 per cent carbon steel (usually known as soft, basic, open-hearth steel) is commonly used for seamless tubing, press-steel frames, sheet brake bands, etc. When annealed, it should be used where strength is required. The quality is improved by cold drawing or rolling. The 0.10 per cent carbon steel in its natural or annealed state cannot be machined easily; it will tear badly in turning, threading, and broaching operations. A heat treatment which will produce some stiffness is to quench it in oil or water at a temperature of 1500 degrees Fahrenheit. This steel will case-harden, but it is not as suitable for this purpose as 0.20 per cent carbon steel.

The 0.20 per cent carbon steel is known as machine steel or machinery steel. It forges and machines well, but is not suitable for screw machine work. Its particular use is for forged machine and case-hardened parts where strength is not of special importance. It can also be drawn into tubes and rolled into cold rolled forms. Heat treatment does not increase the strength of this steel, but causes a refinement of the grain after forging and increases the toughness; all that is necessary is to quench it in oil at 1500 degrees Fahrenheit.

The 0.30 per cent carbon steel is primarily a structural steel. It forges well, machines well, and responds to heat treatment in regard to strength, as well as toughness. It is used extensively in automobile construction and in rifle parts such as ramps, barrel bands, sight bases, etc.

The 0.40 per cent carbon steel is a structural steel of greater strength than that previously mentioned. Its uses are more limited and generally confined to parts requiring a high degree of strength and considerable toughness. It is commonly used for crank shafts, driving shafts, propeller shafts, etc. It has also been used for transmission gears, but is not quite hard enough without case-hardening. When properly annealed it machines well, but is not suitable for screw machine work.

The 0.50 per cent carbon differs but little from that just described, altho owing to its higher carbon content it is somewhat harder to machine and also somewhat stronger.

Nickel Steels

S.A.E. Steel No.	*Carbon Range*	*Manganese Range*	*Phosphorus Maximum*	*Sulfur Maximum*	*Nickel Range*
2015	0.10-0.20	0.30-0.60	0.04	0.045	0.40-0.60
2115	0.10-0.20	0.30-0.60	0.04	0.045	1.25-1.75
2315	0.10-0.20	0.30-0.60	0.04	0.045	3.25-3.75
2320	0.15-0.25	0.50-0.80	0.04	0.045	3.25-3.75
2330	0.25-0.35	0.50-0.80	0.04	0.045	3.25-3.75
2335	0.30-0.40	0.50-0.80	0.04	0.045	3.25-3.75
2340	0.35-0.45	0.50-0.80	0.04	0.045	3.25-3.75
2345	0.40-0.50	0.50-0.80	0.04	0.045	3.25-3.75
2350	0.45-0.55	0.50-0.80	0.04	0.045	3.25-3.75
2512	Max.-0.17	0.30-0.60	0.04	0.045	4.75-5.25

Alloy steels must be heat-treated; they should not be used in the annealed or natural condition. When annealed they are but slightly superior to plain carbon steels.

The 0.15 per cent. carbon nickel steel is suitable for carbonizing purposes. When properly carbonized and heat-treated, it has a strong and tough core and a hard exterior. This steel is especially adapted for case-hardened receivers and other case-hardened gun parts requiring both strength and hardness.

The 0.200 per cent carbon nickel steel may be used interchangeably with that just described. It is intended primarily for case-hardening purposes, but may, with suitable heat-treatment, also be used for structural parts.

The 0.25 per cent carbon nickel steel may also be used hardened and is satisfactory for barrels and transmission gears. The treatment for carbonizing must be slightly modified to allow the increase of carbon contents. It also can be used for many structural parts when subjected to heat-treatments.

The 0.30 per cent carbon nickel steel is primarily used for structural parts such as axles, crank shafts, driving shafts, transmission shafts, and barrels requiring strength and toughness. Wide variations as to elastic limits are possible by varying the quenching mediums—oil, water, or limes—and by variations in the drawing temperatures.

The 0.35 per cent carbon nickel steel is very similar to that just described. The 0.40, 0.450, and 0.550 per cent carbon nickel steels are not widely used, but are advisable for certain purposes. A greater hardness is obtainable than with steels having lower carbon contents, but as increased brittleness accompanies the greater hardness, the treatment must be modified to meet these conditions. For example, the final quenching must be at a lower temperature in order to secure the desired toughness and other properties.

There are three kinds of nickel-chromium steels in common use: low, medium, and high nickel-chromium steels. In general, it may be said that the heat-treatment and properties of these steels are much the same as those of the plain nickel steels, except that the effects of the heat-treatment are somewhat augmented by the presence of chromium.

The low nickel-chromium with carbon contents up to 0.20 per cent are intended primarily for case-hardening, while those with carbon contents from 0.25 to 0.40 per cent are adapted to structural purposes. Those with carbon contents from 0.45 to 0.55 per cent may be used for gears and other structural parts where a high degree of strength and hardness is required and where toughness is not of first importance.

The medium nickel-chromium steels are of the same composition as the low nickel-chromium steels except that they contain more nickel and chromium. Their general usage is practically the same.

The high nickel-chromium steels require different heat-treatment from other types mentioned. Annealing before machining will be found necessary for these steels, owing to the high percentages of nickel and chromium. The steels with low carbon contents are case-hardened the same as low nickel-chromium steels, and those with higher carbon contents are used for structural parts. In general these steels are used where unusual strength is demanded. For example, the 0.45 per cent high nickel-chromium steel is used for gears where extreme strength and hardness is necessary. The carbon content is high enough to give the required degree of hardness by quenching and without case-hardening. This steel is difficult to forge. During

Nickel Chromium Steels

S.A.E. Steel No.	*Carbon Range*	*Manganese Range*	*Phosphorus Maximum*	*Sulfur Range*	*Nickel Range*	*Chromium Range*
3115	0.10-0.20	0.30-0.60	0.04	0.045	1.00-1.50	0.45-0.75
3120	0.15-0.25	0.30-0.60	0.04	0.045	1.00-1.50	0.45-0.75
3125	0.20-0.30	0.50-0.80	0.04	0.045	1.00-1.50	0.45-0.75
3130	0.25-0.35	0.50-0.80	0.04	0.045	1.00-1.50	0.45-0.75
3135	0.30-0.40	0.50-0.80	0.04	0.045	1.00-1.50	0.45-0.75
3140	0.35-0.45	0.50-0.80	0.04	0.045	1.00-1.50	0.45-0.75
3215	0.10-0.20	0.30-0.60	0.04	0.040	1.50-2.00	0.90-1.25
3220	0.15-0.25	0.30-0.60	0.04	0.040	1.50-2.00	0.90-1.25
3230	0.25-0.35	0.30-0.60	0.04	0.040	1.50-2.00	0.90-1.25
3240	0.35-0.45	0.30-0.60	0.04	0.040	1.50-2.00	0.90-12.5
3245	0.40-0.50	0.30-0.60	0.04	0.040	1.50-2.00	0.90-1.25
3250	0.45-0.55	0.30-0.60	0.04	0.040	1.50-2.00	0.90-1.25
3312	Max.-0.17	0.30-0.60	0.04	0.040	3.25-3.75	1.25-1.75
3325	0.20-0.30	0.30-0.60	0.04	0.040	3.25-3.75	1.25-1.75
3335	0.30-0.40	0.30-0.60	0.04	0.040	3.25-3.75	1.25-1.75
3340	0.35-0.45	0.30-0.60	0.04	0.040	3.25-3.75	1.25-1.75
3415	0.10-0.20	0.30-0.60	0.04	0.040	2.75-3.25	0.60-0.95
3435	0.30-0.40	0.30-0.60	0.04	0.040	2.75-3.25	0.60-0.95
3450	0.45-0.55	0.30-0.60	0.04	0.040	2.75-3.25	0.60-0.95

the forging operation, it should be kept at a high or plastic heat and should not be hammered or worked at ordinary forging temperatures, as cracking is liable to follow. On the other hand, too high a temperature is not advisable, as the steel then becomes re-short and breaks.

in such steels varies from 2.5 to about 5 per cent, and of carbon from 0.8 to 2 per cent.

The composition of ordinary screw stock should be in general about as follows: carbon, from 0.08 to 0.20 per cent; manganese, 0.30 to 0.80; phosphorus, not to exceed 0.12 per cent; sulfur, 0.06 to

Chromium-Vanadium Steels

S.A.E. Steel No.	*Carbon Range*	*Manganese Range*	*Phosphorus Maximum*	*Sulfur Maximum*	*Chromium Range*	*Vanadium Min.*	*Vanadium Desired*
6120	0.15-0.25	0.50-0.80	0.04	0.04	0.80-1.10	0.15	0.18
6125	0.20-0.30	0.50-0.80	0.04	0.04	0.80-1.10	0.15	0.18
6130	0.25-0.35	0.50-0.80	0.04	0.04	0.80-1.10	0.15	0.18
6135	0.30-0.40	0.50-0.80	0.04	0.04	0.80-1.10	0.15	0.18
6140	0.35-0.45	0.50-0.80	0.04	0.04	0.80-1.10	0.15	0.18
6145	0.40-0.50	0.50-0.80	0.04	0.04	0.80-1.10	0.15	0.18
6150	0.45-0.55	0.50-0.80	0.04	0.04	0.80-1.10	0.15	0.18
6195	0.90-1.05	0.20-0.45	0.03	0.03	0.80-1.10	0.15	0.18

Chromium-vanadium steels are used for many automobile parts, particularly springs, axles, driving shafts, and gears—and also in springs for guns, etc. Those grades which contain from 0.15 to 0.20 per cent of carbon are intended primarily for case-hardened parts, while those of from 0.25 to 0.50 per cent carbon steel may be used for gears and springs. When used for structural parts, if an exceedingly high strength is desirable, the 0.50 per cent carbon chromium-vanadium steel is suitable for springs and gears.

0.12 per cent. Screw stock is easily machined and cheap, but lacks strength and toughness, and is not safe for vital parts. Screws made from hot-rolled bars of this material should be heat-treated and not used in an annealed condition. Screws made from cold-rolled bars are much stronger, but the best results in either case are obtained by a heat-treatment. After machining, heat to 1500 degrees Fahrenheit, quench, reheat from 600 to 1300 degrees Fahrenheit, and cool slowly. This steel is used extensively on .22-caliber barrels by American gun makers, and is known as cold-drawn steel.

Molybdenum Steels

S.A.E. Steel No.	*Carbon Range*	*Manganese Range*	*Phosphorus Maximum*	*Sulfur Maximum*	*Chromium Range*	*Nickel Range*	*Molybdenum Range*
4130	0.25-0.35	0.40-0.70	0.04	0.045	0.50-0.80		0.15-0.25
4140	0.35-0.45	0.40-0.70	0.04	0.045	0.80-1.10		0.15-0.25
4150	0.45-0.55	0.40-0.70	0.04	0.045	0.80-1.10		0.15-0.25
4615	0.10-0.20	0.30-0.60	0.04	0.045		1.50-2.00	0.20-0.30

Molybdenum steels have properties similar to tungsten steels, except that a smaller quantity of molybdenum than that of tungsten is required to secure corresponding results.

General Properties of Alloy Steels — Alloy or "special" steels are combinations of iron and

Chromium Steels

S.A.E. Steel No.	*Carbon Range*	*Manganese Range*	*Phosphorus Maximum*	*Sulfur Maximum*	*Chromium Range*
5120	0.15-0.25	0.30-0.60	0.04	0.045	0.60-0.90
5140	0.35-0.45	0.50-0.80	0.04	0.045	0.80-1.10
5150	0.45-0.55	0.50-0.80	0.04	0.045	0.80-1.10
52100	0.95-1.10	0.20-0.50	0.03	0.030	1.20-1.50

Chromium steel is well adapted for armor-piercing projectiles, owing to its hardness, toughness, and stiffness, and is extensively used for this purpose. Chromium steel is also used in the construction of safes and for castings subject to unusually severe stress, such as those used in rock-crushing machinery, etc. The percentage of chromium used

carbon with some other element such as nickel, chromium, tungsten, vanadium, manganese, or molybdenum. All these metals give certain distinct properties to the steel, but in every case the principal quality is the increase in hardness and toughness.

Nickel steel usually contains from 3 to 3.5 per

Screw Stock

S.A.E. Steel No.	*Carbon Range*	*Manganese Range*	*Phosphorus Maximum*	*Sulfur Maximum*
1112	0.08-0.16	0.60-0.80	0.09-0.13	0.075-0.15
1120	0.15-0.25	0.60-0.90	Max.-0.06	0.075-0.15

cent nickel and from 0.20 to 0.40 per cent carbon. This steel is used for armor plate, ammunition, barrels, receivers, bridge construction, rails, etc. One of the reasons why nickel steel is adapted for armor plate is that it does not crack when perforated by a projectile. The Krupp steel used for armor plate contains approximately 3.5 per cent nickel, 1.5 per cent chromium, and 0.25 per cent carbon. The advantage claimed for nickel steel for railroad rails is its increased resistance to abrasion and high elastic limit. On sharp curves, it has been estimated that a nickel-steel rail will outlast four ordinary rails. High grade barrels are made from this steel.

Tungsten steel is largely employed for high-speed metal-cutting tools and magnet steels. It has also been used in the manufacture of armor plate. All cores used in the .30 and .50 caliber armor-piercing projectiles are 3.5 per cent tungsten. In the latter case, the metal is combined either with nickel or chromium, or with both of these metals. The property that tungsten imparts to steel is that of hardening in air after heating to the required temperature. This steel usually contains from 5 to 15 per cent tungsten (altho the percentage is sometimes as high as 24 per cent with from 0.4 to 2 per cent carbon).

Vanadium steel ordinarily contains from 0.16 to 0.25 per cent vanadium. The effect of vanadium is to increase the tensile strength and elastic limit, and it gives the steel the valuable property of resisting, to an unusual degree, repeated stresses. Vanadium steel is especially adapted for springs, car axles, gears subject to severe service, and for all parts which must withstand vibrations and varying stresses.

Manganese steel contains 12 per cent manganese and from 0.8 to 1.25 per cent carbon. If there is only 1.5 per cent manganese, the steel is very brittle, and additional manganese increases this brittleness until the quality has reached 4 to 4.15 per cent, when the steel can be pulverized under the hammer. With a further increase of manganese, the steel becomes ductile and very hard, these qualities being at their highest degree when the manganese content is 12 per cent. The ductility of the steel is brought out by sudden cooling, the process being the opposite of that employed for carbon steel.

Crucible or Tool Steel — Crucible or tool steel, formerly called cast steel, is made by using high-grade low-phosphorus wrought iron and adding carbon to it. The oldest method of adding carbon was the "cementation process," in which iron bars were packed in airtight retorts with powdered charcoal between the bars. The filled retorts were put in a furnace where they were heated to a red heat for several days. The carbonized bars commonly called "blistered steel" were then cut in small pieces, remelted in a crucible, and poured into moulds, forming small billets. The newer method is to put small pieces of wrought iron into an airtight crucible containing the proper amount of powdered charcoal and melt them down. The other ingredients, such as chromium, tungsten, etc., are also added in the crucible.

The most common defects in finished bars of tool steel are:

1. *Seams.* These can generally be seen with the naked eye on the surface of the bar; they run lengthwise. Tools made from steel containing seams are liable to open in forging or to crack in hardening.

2. *Laps.* These are caused either in rolling or drawing down under the hammer. They present an appearance similar to a seam, but are usually longer, and in the case of rolled bars, frequently run the whole length of the bar.

3. *Pipes.* These defects are caused by the contraction when cooling and are in the top half of the ingot. The lower half is usually sound, as its contraction when cooling is fed by the molten metal in the top half. The larger the ingot, the more difficult this defect is to deal with. This defect causes tools to split from the center in hardening.

Tool steel which is purchased from the steel manufacturer is generally stamped-annealed to permit easy machining, but for forging purposes the unannealed bars are all that is required, for they must be annealed before any machining can be done.

If the student wishes to go into this subject extensively he should become familiar with all steels which are placed in the market by the large steel companies. Secure various catalogs, as some of these contain valuable information. As you know, steel-making today calls for men who have had scientific training, for it is a science in itself. The experience which I gained at the arsenal in handling all makes of steel, together with their heat-treatment for a vast number of tools and gauges, fitted me to treat the subject for the beginner. It would have been far easier to treat it technically, but if you need such knowledge you will acquire it from the proper source.

CHAPTER VII

Heat-treatment of Steel

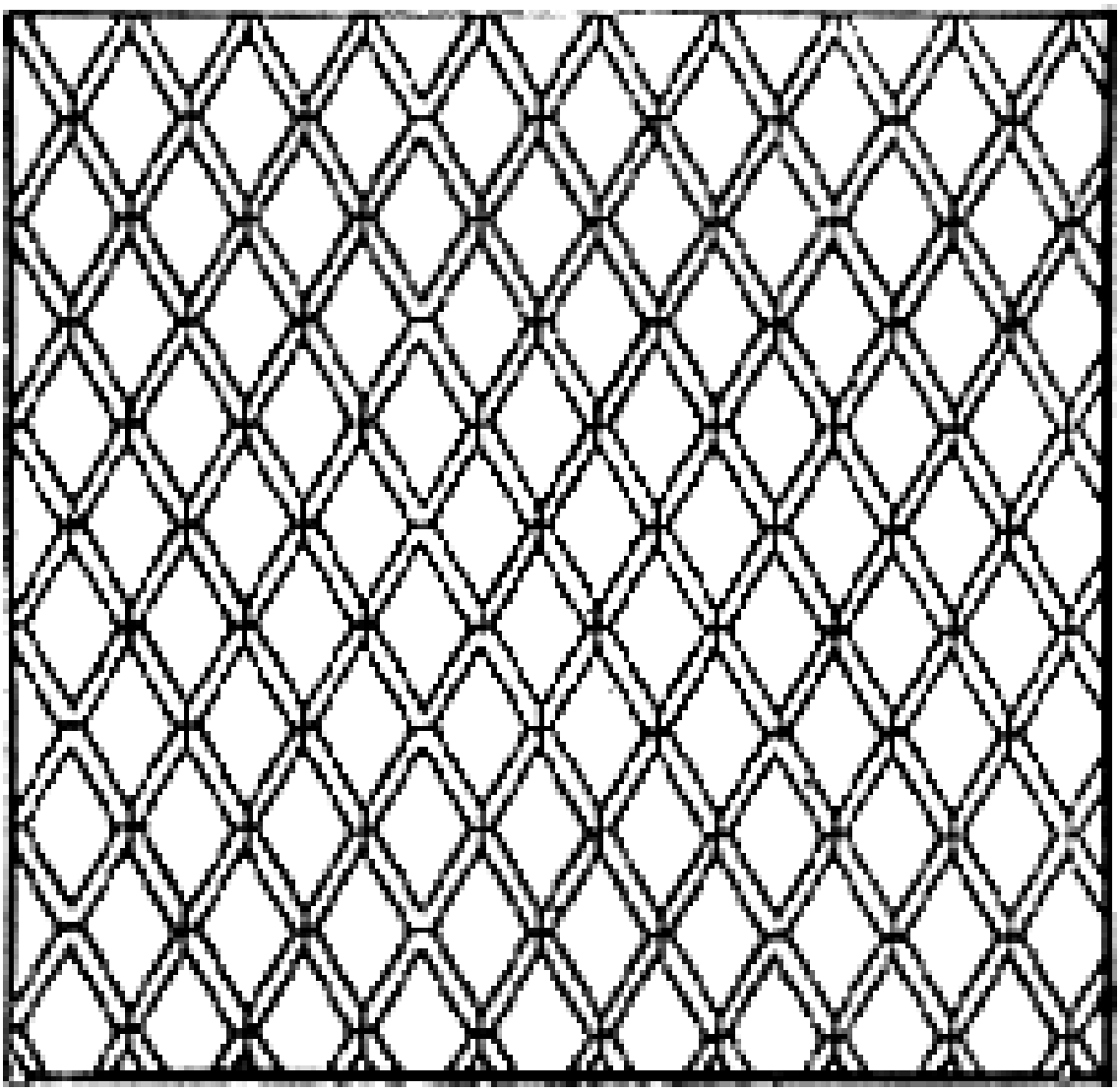

CHAPTER VII

Heat-Treatment of Steel

THE problem of giving a satisfactory exposition of the subject of this chapter is very simple, but as a rule only one out of a hundred readers will have access to the hardening room in order to carry out the methods I am about to outline. These methods are vital in every detail, however, for complete gun work. At the arsenal we had a very elaborate hardening equipment; furnaces, quenching baths, recording instruments meant the success of the manufacturing division. The amateur in his struggle must devise ways and means to solve this problem. I shall outline the correct methods and then he can figure out his own equipment, even tho he constructs it from materials close at hand.

Heating Furnaces — The furnaces used for the hardening, annealing or tempering of steel are heated either by gas, oil, electricity or solid fuel. Furnaces using oil or gas are made in many different styles and sizes to suit various classes of work, but differ very little in general arrangement. Crude oil and kerosene are commonly used in oil-heated furnaces. To insure an unvarying temperature, the air and fuel pressure should be uniform. Gas furnaces use either natural, artificial or producer gas. Some gas furnaces are equipped with an automatic apparatus which operates in conjunction with a pyrometer for controlling the temperature to within a few degrees of a given point. The air supply is generally obtained from a positive blower, altho where a compressor is installed for operating other tools, the air is sometimes utilized for the furnace by interposing reducing valves to diminish the pressure.

Artificial gas is more expensive than oil, but is much cleaner, and the supply tanks required for oil are unnecessary. Producer gas obtained from a separate plant is not economical, unless there are a considerable number of furnaces. When oxidization or the formation of scale is particularly objectionable, furnaces of the muffle type are often used. These furnaces contain a refractory in which the steel is placed, thus excluding the products of combustion. These muffles must be replaced quite frequently and more fuel is required than for an oven type of furnace.

Electrically heated furnaces are generally the most satisfactory for the heat-treatment of high-grade work, altho the cost of electricity exceeds that of liquid or gaseous fuels. A type of electric furnace commonly used derives its heat from a heavy low-voltage current which passes through electrodes to resistance elements in the heated chamber. This type of furnace gives uniform heat and is adapted to accurate regulations. Electrically heated furnaces are also used in conjunction with heating baths, the current being transmitted through a bath of metallic salts, or by two electrodes on opposite sides of the crucible.

The conductivity of the salt is very small at normal temperatures. When in a molten condition, the salt offers a comparatively low resistance to the electric current, and therefore, when the bath is hot, it forms an electric conductor, and each part of the bath produces its own heat.

Solid fuels, such as coke, coal, charcoal, etc., are also used as described in Chapter XIX, Volume I. A common type of solid-fuel furnace is equipped with a grate upon which the fuel is burned and an arch above the grate which reflects the heat back to the plate that holds the steel to be heated. This plate should be so located that the flames will not come in direct contact with the steel and injure the finished surfaces. To prevent this, the steel is sometimes safeguarded by placing it inside of a clay or cast-iron retort which is encircled by the flames. The solid-fuel type of furnace is inferior to other types for most purposes because it is almost impossible to maintain a uniform temperature, and the gases of combustion are liable to injure the steel.

Pyrometers — Pyrometers are a necessary addition to furnace equipment and have great value in connection with the heat-treatment of steel, as they make it possible to determine high temperatures accurately; moreover, the temperature, when heating for hardening, can be regulated to conform with the temperature that has given the best results in practise. There are several different types of pyrometers commonly used in industrial service, and they may be classified according to the principle upon which they operate.

Thermo-Electric Pyrometer — On this type of pyrometer, temperature variations are determined by the measurements of an electric current generated by the action of heat on the junction of two dissimilar metals; that is, on junction of the thermo-cuppler which has a temperature different from the other, a current is developed, and a meter indicates the temperature, the relation between the strength of current and the temperature being constant. The thermo-cuppler and the meter form the essential parts. The two dissimilar metals composing the thermo-cuppler are connected at one end, which is called the "hot end" and is placed in the furnace at the temperature required. Except at the hot end, the two wires or elements do not touch. The free ends, called the "cold end," are kept away from the heat. When the hot end is heated, the intensity of the current generated depends upon the difference between the temperature of the hot and cold ends. The meter is connected to the cold end and shows the value of the current in degrees Fahrenheit or Centigrade. Some pyrometers of this type may be used intermittently for temperatures up to 3000 degrees Fahrenheit.

Heating Steels in Liquid Baths — The liquid baths commonly used for heating tool steel preparatory to hardening are molten lead, cyanid of potassium, barium chlorid, a mixture of barium and potassium chlorid, and other metallic salts. The molten substance is retained in a crucible, which is usually heated by gas or oil. The principal advantages of heating baths are as follows: no part of the work can be heated to a temperature above that of the bath; the temperature can easily be maintained at whatever degree has proved in practise to give the best results; the submerged steel can be heated uniformly; and the finished surfaces are protected against oxidization.

The Lead Bath — I have mentioned this bath often in chapters pertaining to steels, but it will do no harm to give another explanation. The lead bath is extensively used, but is not adapted to the high temperatures required for hardening high-speed steel, as it begins to vaporize at about 1190 degrees Fahrenheit, and if heated much above that point, rapidly volatilizes and gives off poisonous vapors; therefore lead furnaces should be equipped with hoods to carry away the fumes. Lead baths are especially adapted for springs, reamers, and small tools made for gun work. Gas is the most satisfactory fuel for heating the crucible. It is important to use pure lead that is free from sulfur. The work should be preheated before plunging into the lead.

Cyanid of Potassium Bath — This is another bath which is extensviely used by gun manufacturers to harden parts and at the same time secure an ornamental color effect. Many steel hardeners prefer cyanid of potassium to lead for heating steel cutting tools, gauges, dies, etc. When cyanid is used, the parts should be suspended from the side of the crucible by means of wires or wire-cloth baskets, to prevent them from sinking to the bottom. Steel will not sink in a lead bath, as lead has a higher specific gravity than steel. Cyanid of potassium should be carefully used, as it is a violent poison. The fumes are very injurious and the crucible should be enclosed with a hood connecting with a chimney or ventilation shaft.

Barium Chlorid Bath — As a temperature of about 2400 degrees Fahrenheit can be obtained with this bath, it is used to harden high-speed steel parts such as barrel drills, barrel reamers of high-speed steel etc. The tools come from this bath free of scale. When barium chlorid is used for the lower temperatures required for carbon steel, it is mixed with chlorid of potassium. For temperatures between 1400 and 1650 degrees Fahrenheit, use three parts barium chlorid and two parts chlorid of potassium. For higher temperatures, the amount of potassium chlorid should be proportionately reduced, pure barium chlorid being used for temperatures above 2000 degrees Fahrenheit. All steel should be preheated to 600 or 800 degrees before being immersed in the bath. Temperatures below 1075 degrees Fahrenheit can be obtained by using equal parts of potassium nitrate and sodium nitrate. This mixture sets at 400 degrees Fahrenheit and can be used as a tempering bath.

Annealing Steel — The purpose of annealing or normalizing is not only to soften steel for machining, but to remove all strains incident to machining, rolling or hammering. A common method of annealing is to pack the steel in a cast-iron box or pipe containing some material such as powdered charcoal, slaked lime, or sand. The box and its contents are sealed with fire clay on the ends and then heated in a furnace to the proper temperature for a length of time depending upon the size of the steel. After heating, the box or pipe and its contents should be allowed to cool at a rate slow enough to prevent hardening. The best time to do such work is in the afternoon before going home. Heat the box or pipe in the furnace to the required temperature and shut the furnace off, allowing it to cool with the furnace, and remove the following morning. It is essential, when annealing, to exclude the air as completely as possible while the

steel is hot, to prevent the outside of the steel from becoming oxidized.

The temperature required for annealing should be slightly above the critical point, which varies for different steels. Low-carbon steel should be annealed about 1650 degrees, and high-carbon steel between 1300 and 1400 degrees, Fahrenheit. This temperature should be maintained just long enough to heat the entire piece evenly throughout.

Care should be taken not to heat the steel much above the decalescence or hardening point. When steel is heated above this temperature, the coarseness increases with an increase of temperature. Moreover, if steel that has been heated above the critical point is cooled slowly the coarseness of the grain corresponds to the coarseness at the maximum temperature; hence, the grain of annealed steel is coarser.

If only a small piece of steel or a single tool is to be annealed, this can be done by building up a fire-brick box in an ordinary blacksmith's forge, placing the tool in it, covering over the top, then heating the whole, covering it with coke, and leaving it to cool over night. Another quick method is to heat the steel to a red heat. Bury it in dry fine sand, lime, or hot ashes, and allow it to cool. I have read of quick annealing methods such as heating the piece to a dull black-red, and plunging it into hot soapy water, and also into hot water. Methods of this kind are not to be recommended; the advice in their favor flows from the pen of the inexperienced.

Annealing High-Speed Steel — The following method is used to anneal high-speed steel, and also to normalize barrel tools after they are centered and roughing cuts are taken. All such tools must be given these treatments or you will lose half of the reamers; for these will run out when placed between centers, and will not clean up to required sizes. Use an iron box or pipe of sufficient size to allow at least one-half inch of packing between the pieces of steel to be annealed and the sides of the box or pipe. It is not necessary that each piece of steel be kept separate from the one next to it, but only that the steel be prevented from touching the sides of the annealing pipe or box. Pack carefully with powdered charcoal or fine dry lime, and cover with an airtight cap with small holes, or lute with fire-clay; heat slowly to a dull red heat of about 1470 to 1500 degrees Fahrenheit, and allow to remain at this heat from two to eight hours, depending upon the size of the pieces to be annealed. All barrel tools require about two hours. Cool as slowly as possible, and do not expose to the air until absolutely cold. A good way to insure this is to allow the box or pipe to remain in the furnace until cold.

We have conducted a series of experiments to determine the proper temperature to heat high-speed steel for annealing, with the following results: When the steel was heated to below 1250 degrees Fahrenheit and slowly cooled, as in annealing, it retained the original hardness and brittleness imparted in forging. When heated to between 1250 and 1450 degrees, the Brinnell test indicated that the steel was soft, but turning tests proved that the steel still retained its original brittleness. However, when heated to between 1475 and 1575 degrees, the steel became very soft; it had a fine-grained fracture and the initial brittleness had entirely disappeared. In carrying these tests further to 1625, 1725, and 1825 degrees Fahrenheit, it was found that steel became very soft, but that there was a gradual increase in brittleness and in the size of the grain, until at 1875 degrees the steel again became as brittle as annealed steel. Lime was used as a packing medium in making these tests.

Hardening, Critical Temperatures — The "critical points" of carbon tool steel are the temperatures at which certain changes in the chemical composition of the steel take place during both heating and cooling. Steel at normal temperatures has its carbon (which is the chief hardening element) in a certain form called "pearlite" carbon. If the steel is heated to a certain temperature, a change occurs, and the pearlite becomes "martinsite" or hardened carbon. If the steel is allowed to cool slowly, the hardened carbon changes back to pearlite. The points and the effect of these molecular changes are as follows: When a piece of steel is heated to a certain point, it continues to absorb heat without appreciably rising in temperature altho its immediate surroundings may be hotter than the steel. This is the "decalescence point." Similarly, steel cooling slowly from a high heat, will at a certain temperature actually increase in temperature, altho its surroundings may be colder. This takes place at the "recalescence point." The recalescence point is lower than the decalescence point by anywhere from 95 to 200 degrees Fahrenheit, and the lower of these two points does not manifest itself unless the higher one has first been fully passed. These critical points have a direct relation to the hardening of steel. Unless a temperature sufficient to reach the decalescence point is obtained, so that the pearlite carbon is changed into a hardening carbon, no hardening action takes place; and unless the steel is cooled suddenly before it reaches the recalescence point, thus preventing the change back again from hardening to pearlite carbon, no

hardening can take place. The critical points vary for different kinds of steel and must be determined by tests in each case. It is the variation in the critical points that makes it necessary to heat different steels to different temperatures when hardening.

Determining Hardening Temperatures — The temperatures at which decalescence occurs vary with the amount of carbon in the steel, and are also higher for high-speed steel than for ordinary crucible steel. The decalescence point of any steel marks the correct hardening temperature, and the steel should be removed from the source of heat as soon as it has been heated uniformly to this temperature. Heating the piece slightly above this point may be desirable, either to insure the completeness of the structural change throughout, or to allow for any slight loss of heat which may occur in transferring the work from the furnace to the quenching bath. When the steel is heated above the temperature of decalescence it is non-magnetic. If steel is heated to a bright red it will have no attraction for a magnet or magnetic needle, but at about a "cherry-red" it regains its magnetic property. This phenomenon is sometimes taken advantage of for determining the correct hardening temperature, and the use of a magnet is to be recommended if a pyrometer is not available. The only point requiring judgment is the length of time the steel should remain in the furnace after it has become non-magnetic, as the time varies with the size of the piece. When applying the magnetic needle test, be sure that the needle is not being attracted by the tongs.

The correct hardening temperature for any carbon steel can be determined accurately by the use of a pyrometer. This form of apparatus, often used for testing specimens of steel, consists of a small electric furnace in which to heat the specimens, and a special thermo-cuple pyrometer for indicating the range of temperature through which the steel passes. The pyrometer consists of a thermo-cuple, connecting leads, and an indicating meter. The thermo-cuple is a small wire which responds readily to any slight temperature variations. When testing a piece of steel with this instrument the temperature indicated by the meter rises uniformly until the decalescence point is reached. At this temperature, the indicating pointer of the meter remains stationary. The added heat is consumed by internal changes. When these changes are completed, the temperature again rises; the length of the elapsed period depends upon the speed of heating. The temperature at which this pause in the motion occurs should be carefully noted. To obtain the lower critical point, the temperature is first raised about 100 degrees Fahrenheit above the decalescence point; the steel is then removed from the furnace and allowed to cool. The decrease of temperature is immediately shown by the fall of the meter pointer, and at a temperature somewhat below the decalescence point there is again a noticeable lag in the movement of the pointers. The temperature at which the movement ceases entirely is the recalescence point. Immediately following, there may occur a slight rising movement of the pointer.

During these intervals of temperature lag, both during heating and cooling, there may occur a small fluctuation in temperature, hence a definite point in each of these intervals should be considered when a test is made, both critical temperatures being taken at the time the points first become stationary.

While it is possible to harden steel within a temperature range of about 200 degrees and obtain what might seem to be good results, the best results are obtained within a very narrow range of temperatures close to the decalescence point. The hardening temperature for both low tungsten and carbon steel can be located with accuracy, and the complete changes from soft to hard occur within about a range of 10 degrees Fahrenheit or less. After the temperature has been increased more than 35 to 55 degrees Fahrenheit above the hardening point, the hardness of the steel is lessened by a higher temperature, providing the heating is sufficiently prolonged for the steel to be thoroughly heated.

Hardening Baths — When the steel heated above the critical point is plunged into a cooling bath, the rapidity with which the heat is absorbed by the bath affects the degree of hardness; therefore baths of various kinds are used for different classes of work. Clear cold water is commonly employed, and brine is sometimes substituted to increase the degree of hardness. This is very necessary for draw punches used in cartridge manufacturing. Sperm and lard oil baths, with sulfur and resin added, are used for hardening springs. Raw linseed oil is excellent for cutters, reamers, and other small tools. The effect of a bath for steel depends upon its composition, temperature, and volume. The bath should be amply large to dissipate the heat rapidly, and the temperature should be kept constant, so that successive pieces will be cooled at the same rate. Greater hardness is obtained from quenching in salt brine and less in oil than is obtained in water. This is due to the difference in heat-dissipating qualities of these sub-

stances. When water is used, it should be "soft," as unsatisfactory results will be obtained with "hard" water. If thin pieces are plunged in brine there is always danger of cracking, owing to the suddenness of cooling.

The temperature of the hardening bath has a great deal to do with the hardness obtained. In certain experiments a bar quenched at 41 degrees Fahrenheit showed a scleroscopic hardness of 101. A piece from the same bar quenched at 75 degrees had a hardness of 96, while, when the temperature of the water was raised to 124 degrees, Fahrenheit, the bar was decidedly soft, having a hardness of only 83. We found at the arsenal that a temperature between 80 and 110 degrees Fahrenheit was about right for some steels. The higher the temperature of the quenching water, the more nearly does its effect approach that of oil; and if boiling water is used for quenching, it will have an effect even more gentle than that of oil; in fact, it will leave the steel nearly tempered. With oil baths, the temperature changes have little effect upon the degree of hardness. Parts of irregular shapes are sometimes quenched in a water bath that has been warmed somewhat to prevent sudden cooling and cracking. A water bath having one or two inches of oil on top is sometimes employed to advantage for tools made of high-carbon steel, as the oil through which the work first passes reduces the sudden action of the water.

Irregularly shaped parts should be immersed so that the heaviest or thickest section enters the bath first. After immersion, the part to be hardened should be agitated in the bath; the agitation reduces the tendency of the formation of a vapor coating on certain surfaces, and a more uniform rate of cooling is obtained. The work should never be dropped to the bottom of the bath until quite cool. High-speed steel is cooled for hardening either by means of an air blast or an oil bath. Both fresh and salt water are also used, altho as a general rule water should not be used for high-speed steel. Various oils, such as cottonseed, linseed, lard, sperm, kerosene, etc., are also employed. Many prefer cottonseed oil. Linseed oil has the objection of becoming gummy, and lard oil has a tendency to become rancid. Whale oil or fish oil gives satisfactory results, but both have offensive odors; this defect can be overcome by an addition of about 3 per cent heavy "tempering" oil. Steel should never be removed from the bath when once immersed, until perfectly cool.

A quenching solution of 3 per cent sulfuric acid and 97 per cent water will make hardened carbon steel tools come out of the quenching bath bright and clean. This bath is sometimes used for drills and reamers which are not to be polished in the flutes after hardening. Another method of cleaning drills and similar tools after they are hardened is to pickle them in a solution of one part hydrochloric acid and nine parts water. Still another method is to use a heating bath consisting of two parts barium chlorid and three parts potassium chlorid. This method is satisfactory for reamers and tools which are not to be polished in the flutes after hardening.

Kinds of Quenching Baths

(1) Water (soft), preferably distilled; good carbon tool steels should require no mixture added to pure water.

(2) Salt added to water (brine). This quenching fluid will produce a harder scale than will pure water.

(3) Sea (salt) water—the keenest natural water for hardening.

(4) Pure soft water containing soap.

(5) Sweet milk.

(6) Mercury.

(7) Carbonate of lime.

(8) Wax.

(9) Tallow.

(10) Air—mostly used for high-speed steel. Mere exposure, however, is in many cases, and for many steels, not sufficient to produce hardness, and an air blast is necessary, as this furnishes cool air in rapid motion.

(11) Oils such as cottonseed, linseed, whale, fish, lard, lard and paraffin mixed, special quenching oils, etc. A small quantity of sal ammoniac added to the oil bath has a tendency to make the tools come out clean from the bath. Linseed and cottonseed oils are especially used for high-speed steel.

The order of intensity with which various cooling baths will harden steel of about 0.90 to 01.00 per cent carbon is: mercury, carbonate of lime, pure water, water containing soap, sweet milk, different kinds of oils, tallow, and wax. In all cases —except possibly the oils, tallow, and wax—it must be remembered that the tools become harder as the temperature of the bath becomes lower.

Tank Used for Quenching — The main point to be considered in a quenching bath is to keep it at a uniform temperature so that successive pieces quenched will be subjected to the same heat. The next consideration is to keep the bath agitated so that it will not be of different temperatures in different places. Experience has proved that if a piece is held still in a thoroughly agitated bath, it will come out much straighter than if it has been moved around in an unagitated bath. This is an important consideration, especially when hardening long pieces and reamers. It is, besides, no easy matter to keep heavy and long pieces in motion unless it is done by mechanical means. Nearly all tools which the gunmaker requires are of small size; he must construct quenching baths which will

suit his general purpose. Oil for springs requires a special oil mixture, water, etc. Even tho tanks are small, provision must be made for suitable covers and convenient locations for them.

Hardening High-speed Steel — High-speed steel must be heated to a much higher temperature for hardening than carbon steel. A number of tools which the gunsmith uses today are made from this class of steel; in fact, all barrel tools are made from it. A temperature of from 1350 to 1550 degrees Fahrenheit is sufficient for carbon steel. High-speed steel requires from 1800 to 2200 degrees Fahrenheit. The usual method of hardening a high-speed steel tool, such as a lathe turning tool or forming tool, is to heat the cutting end slowly to a temperature of about 1800 degrees Fahrenheit, and then more rapidly to about 2200 degrees, or until the end is at a dazzling white heat and shows signs of melting. The tool point is then cooled, either by plunging it in a bath of oil (linseed or cottonseed) or by placing the end in a blast of dry air. When an oil quenching bath is used, its temperature is varied from the room temperature to 350 degrees Fahrenheit, according to the steel used. The exact treatment varies for different steels, and it is advisable to follow the directions given by the steel manufacturers. Formerly the air blast was recommended, but oil is now extensively used. It is very important to quench the heated steel rapidly after removing from the source of heat.

The barium-chlorid bath is used quite extensively by most arms manufacturers and gunmakers. I have found that this is the only bath to make the small high-speed barrel tools come out clean and hard. The barium chlorid forms a thin coating on the steel, which is thus protected from oxidization while being transferred from the heating bath to the cooling bath of oil. Tests have demonstrated, however, that barium-chlorid baths have certain disadvantages for heating high-speed steel preparatory to hardening, because if the steel is heated to the required temperature, the surface of the tool is softened to some extent. Nevertheless, whatever experiences have resulted in this respect, I have found it to be the only successful method to use on small high-speed tools.

The method which I use to secure these satisfactory results in hardening high-speed tools such as drills, reamers, cutters, counterbores, etc., have been obtained as follows: Coat the tools well with bone-black mixed in raw linseed oil and preheat in an oven type of gas furnace from 1550 to 1700 degrees Fahrenheit. Then transfer the steel to the barium-chlorid bath heated to about 1800 degrees. Gradually bring the temperature up to 2200 degrees, and allow the tools to remain at that temperature for five minutes. Remove swiftly and immerse directly in the oil bath. Such tools, after becoming cold, are then heated in an oil bath between 350 and 400 degrees Fahrenheit, to relieve all strain, and are then dipped into a caustic-soda bath to remove any oil which may adhere to the tools, and then into hot water. This method should be applied to all tools after being tempered.

Local Hardening — One method of hardening locally is to cover the part that is to remain soft with a thin metal shield, so that it prevents the surface from being suddenly cooled by direct action of the cooling medium. (This method is often applied to shotgun parts.) The steam or vapor which forms beneath the cover prevents the cooling medium from entering until the work has cooled sufficiently to prevent hardening; therefore, a rather loose-fitting shield is desirable. The shield should be made of sheet-iron or steel of about No. 29 gauge (0.014) for ordinary work. It is composed of one or more pieces, depending upon the shape of the part, and when several pieces are required they can be bound together with wires. Of course, the surfaces to be hardened are left exposed. The heating should be done in a furnace or open-forge fire. A lead bath should not be used because the hot lead beneath the shield will cause an explosion when the part is cooled. The quenching bath may be the same as when the shield is not used.

Local hardening is also effected by the application of a compound called "enamelite" to the parts which are to remain soft—an application of Formula 27 in Chapter XVI. This compound for tool steel comes in the form of a powder which is mixed with hot water to form a paste. It has the property of clinging to the steel and liberating hydrogen (the greatest known non-conductor) when heated steel is plunged in water. This causes the steel to retain its heat long enough to escape the chill, and remains soft where the enamelite has been applied. A coating of the coppering solution applied to the piece will also cause a spot of local hardening.

Hardening Defects — Uneven heating is the cause of most of the defects in hardening. Cracks from the corners or edges of the tool indicate such uneven heating. Cracks of a vertical nature and dark-colored fissures indicate that the steel has been burned and should be scraped. Tools which have hard and soft places have been either unevenly heated, unevenly cooled, or "soaked"—a term

used to indicate prolonged heating. A tool not thoroughly moved about in the hardening fluid will show hard and soft places, and have a tendency to crack. Tools which are hardened by simply dropping them to the bottom of the tank sometimes have soft places, owing to contact with the floor or sides of the tank. They should be thoroughly quenched before dropping them completely. When a tool appears soft and will not harden, it probably has been decarbonized on the surface by too much heat or by soaking too long. The surface must be removed before the tool will harden properly. Tools are sometimes soft because the cooling bath is not large enough and becomes too warm after a few pieces have been hardened.

Overheated Steel — Overheated steel that is not actually burned can be partly restored by heating to the proper heat and allowing it to cool slowly in hot ashes or sand. When cold, the steel is hardened again at the proper heat throughout. If the overheating originally took place in forging, the risk of cracking in hardening will be lessened by adopting the process mentioned. Care should be taken that the tyer of the forge is well covered when heating tool steel; a tool coming in direct contact with the air blast will become surface-burned, show soft places in hardening, and wear badly in use.

Scale on Hardened Steel — To prevent scale, care must be taken to keep the heated steel from being exposed to the direct action of the air. When using an oven-heating furnace, the flames should be so regulated that they are not visible in the heated chamber. The heated steel should be exposed to the air as little as possible when transferring it from the furnace to the quenching bath. An old method which we used for preventing the scale and retaining a fine finish on tools in the manufacturing division at the arsenal was to paint the work with bone-black mixed in sperm oil. I have always used this and always obtain fine results on tools. Another method which is used by jewelry manufacturers for small dies, taps, etc., is to fill the die impression with powdered boracic acid, and place near the fire until the acid melts. A little more acid is added to insure covering all the surfaces. The die is then hardened in the usual way.

If the boracic acid is not removed in the quenching bath, immerse the work in boiling water. Dies hardened with this method are said to be as durable as those heated without the acid. The advantage of using bone-black is that as soon as the steel is immersed in the bath, the bone-black disappears.

Tempering by the Color Method — Hardened steel can be tempered or made softer and less brittle by reheating it to certain temperatures (depending upon the nature of the steel and its intended use) and then cooling. When steel is tempered by the color method, the temper is gauged by the colors formed on the surface as the heat increases. First, the surface is brightened to read the color changes, and then the steel is heated either by placing it upon a piece of red-hot metal or gas-heated plate, or in any other available way. As the temper increases, various colors appear on the brightened surface. First there is a faint yellow which blends into a straw, then light brown, dark brown, purple, blue and dark blue, with various intermediate shades. The temperatures corresponding to the different shades are given in tables on temperatures and colors for tempering. (Figure 47.) Lathe and milling-machine tools, chisels, etc., are commonly tempered by first heating the cutting end to a cherry red, and then quenching the part to be hardened.

When the tool is removed from the bath, the heat remains in the unquenched end until the desired color (which will show on the brightened surface) is obtained, after which the entire tool is quenched. The foregoing methods are convenient, especially when only a few tools are to be treated; but the color method of gauging temperatures is not dependable, as the color varies with the composition of the metal.

The modern method of tempering, especially in quantity, is to heat the hardened parts to the required temperature in a bath of heated oil; the parts are then removed from the bath and quenched. The bath method makes it possible to heat the work uniformly, and to a given temperature within close limits.

Tempering in Oil — Oil baths are extensively used for tempering tools, the work being immersed in oil heated to the required temperature as indicated by a thermometer. It is important that the oil have a uniform temperature throughout and that the work be immersed long enough to acquire this temperature. Cold steel should not be plunged into a bath heated for tempering, owing to the danger of cracking it. The steel should either be preheated to about 300 degrees Fahrenheit before placing in the bath, or the latter should be heated to the required degree. A temperature of from 650 to 750 degrees Fahrenheit can be obtained with a potassium nitrate bath.

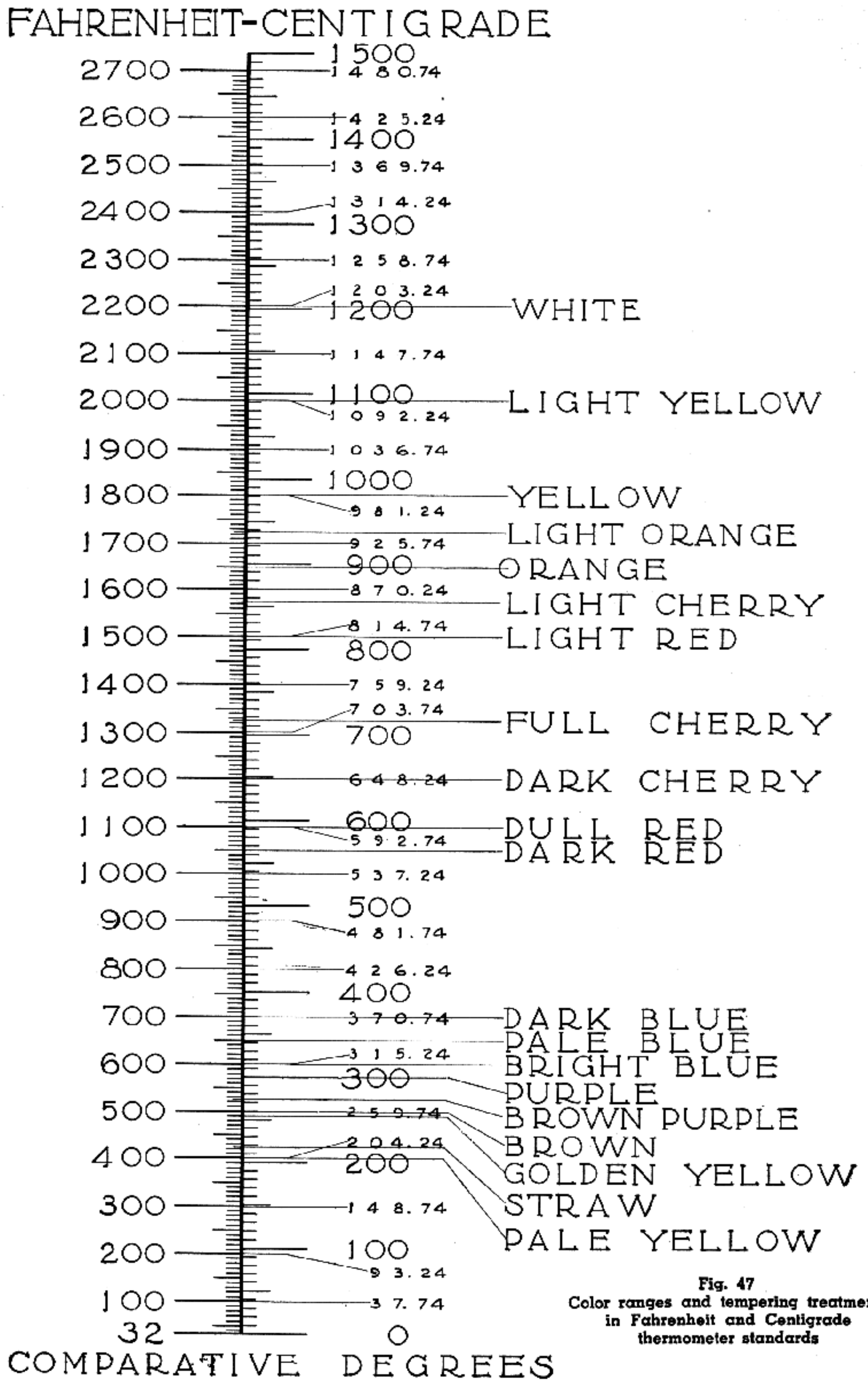

Fig. 47
Color ranges and tempering treatments in Fahrenheit and Centigrade thermometer standards

Tempering Furnaces — In tempering furnaces, the only really important consideration is to make sure that the furnace is so built as to heat the bath uniformly throughout. It is never safe, however, to let any tools being tempered rest against the bottom or sides of the tank, as no matter how scientifically the furnace may be built, these parts are in most cases hotter than the fluid itself. It is, of course, just as important to keep the thermometer from resting against any of these parts, in order to insure correct readings. After the pieces tempered are taken out of the oil bath, they should immediately be dipped in a tank of caustic soda (not registering over 8 or 9) and after that in a tank of hot water. This will remove all oil which might adhere to the tools.

Case-hardening — Case-hardening is the process of hardening the surface of low-carbon steel or iron by carbonizing the surface. When parts must be case-hardened in quantity, they should be packed in an iron box containing some carbonaceous material. The box and its contents are then heated for a certain length of time, depending upon the degree of hardened surface desired and the nature of the material. The heat for case-hardening varies from 1550 to 1700 degrees Fahrenheit, the temperature being governed to some extent by the requirements. The absorption of carbon begins when the steel reaches about 1300 degrees. At the end of the carbonizing period, the box is withdrawn from the furnace and is allowed to become quite cold. The box and the articles are then placed in a muffle furnace and reheated to about 1450 degrees Fahrenheit after which they are quenched in cold water, tepid water, or oil, the bath depending upon the purpose for which the parts are to be used. For ordinary purposes, clear cold water is satisfactory. To produce a very hard surface, use salt water. When a hard surface is not important, as in the case of a tough core, use an oil bath. The practise of allowing the box and its contents to cool and then reheating prior to quenching is based on the old rule of hardening on a rising heat. This method gives more satisfactory results than that of plunging the parts into a tank of cold water at the end of the carbonizing period.

Carbonizing Materials — The carbonizing materials in general are charred leather, powdered bone, cyanid of potassium, wood and "animal" charcoal, prussiate of potash, and other compositions consisting of mixtures of carbonaceous matter and certain cyanids of nitrates. For slight hardening, cyanids are often used. Charred leather gives good results, altho poorly charred leather or that made from old boots, shoes, belting, etc., should not be used. A mixture preferred by some to charred leather consists of 60 parts wood charcoal and 40 parts barium carbonate. There are some excellent carbonizing materials made by the E. H. Houghton Company of Philadelphia, Pennsylvania.

Steel for Case-hardening — The percentage of carbon in steels ordinarily used for parts to be case-hardened varies, as a general rule, from 0.15 to 0.20 per cent. If the carbon exceeds 0.20 per cent, it tends to give a hard instead of a soft core. If the carbon content is too low, the steel may be difficult to machine; therefore, steels containing as much as 0.20 to 0.25 per cent carbon are often used for case-hardening. For general work, steel of the following composition will be found satisfactory: carbon, 0.16 to 0.20 per cent; manganese, less than 0.35 per cent; silicon, not over 0.30 per cent. The sulfur and phosphorus should be as low as possible, not exceeding 0.10 per cent.

Degree and Depth of Hardened Surface — The percentage of carbon contained in the case-hardened surface should vary according to requirements. A high-carbon case contains 1.10 per cent carbon, giving a very hard wearing surface suitable for work that must withstand a fairly constant pressure such as shafts running in bearings; but for parts which must withstand repeated shocks, such as actions, this amount of carbon would render them too brittle; in such cases it is advisable not to exceed 0.90 to 1 per cent carbon. For most purposes, 0.90 per cent carbon is preferable. Various experiments indicate that the percentage of carbon in the hardened crust varies with the depth of the latter; the deeper the penetration, the higher the contents. Crusts about 0.050 inch deep usually have from 0.85 to 0.90 per cent carbon on the surface. In many instances a penetration of 0.040 inch is sufficient, but if the work is to be ground after case-hardening, it is advisable to carbonize to a depth of about $\frac{1}{16}$ inch. Too deep a carbonized case makes the work more brittle, partly because of the prolonged exposure to a high temperature and partly on account of the increase in the hardened section and the decrease in the softer and more ductile core; hence, parts to withstand bending stresses, like gear teeth, should not be carbonized too deeply. Further, penetration of the carbon increases with the temperature and with the time of exposure, but not in direct proportion to these two factors. Carbonization takes place rapidly until the crust is saturated with carbon, when there is a sudden diminution in the rate of carbon-

ization, which varies according to the temperature.

Case-hardening for Colors — For hardening and at the same time coloring such parts as single-shot actions, shotgun actions, guards, butt plates, etc., the following mixture may be used: 10 parts of charred bone, 6 parts of wood charcoal, 4 parts of charred leather, and 1 part of powdered cyanid. The leather should be black, crisp, and well pulverized, and the four ingredients well mixed. The object in charring the bone and leather is to remove all grease. The parts to be colored must be well polished and should not be handled with greasy hands. If the colors obtained are too gaudy, the cyanid may be omitted; and if there is still too much color, leave out the charcoal. The parts to be colored and hardened should be packed in a piece of common gas pipe having a closed end. Pipe is preferable because the pieces can be dumped into the cooling water with little or no exposure to the air. The opened end of the pipe can be placed close to the surface of the water before the parts are removed, but with a box there would be more or less exposure. This class of work should be heated to a dark cherry-red and kept at that temperature for three hours or longer. If the temperature is too high, no colors will appear. The tank should be arranged with a compressed air pipe connected with the water pipe at the bottom in such a way that a jet of air is forced upward, thus filling the tank with bubbles. There should also be a sieve or basket in the tank for receiving the work. After quenching, place the parts in boiling water for five minutes, and then bury them in dry sawdust for half an hour. Another mixture recommended for coloring consists of 10 parts granulated bone, 2 parts bone-black, and 1 part granulated charred leather.

To Clean Work After Case-hardening — To clean work, especially if knurled, where dirt is likely to cling in the crevices after case-hardening, wash it in caustic soda (1 part soda to 10 parts water). In making this solution, the soda should be put into the hot water gradually, and the mixture stirred until the soda is thoroughly dissolved. A still more effective method of cleaning is to dip the work in a mixture of 1 part sulfuric acid and 2 parts water. Leave the pieces in this mixture about three minutes; then wash them off immediately in a soda solution.

Pack-hardening — Pack-hardening, as the term is generally understood, consists in treating steel (generally tool steel) with some carbonaceous material and quenching it in oil. The terms "pack-hardening" and "case-hardening" are often used interchangeably, the two processes being similar. The surface of the steel is supplied with additional carbon by the use of some carbonaceous material that will not be injurious. To do this, the steel is packed in sealed in iron boxes with the carbonizing material. Bone should never be used for pack-hardening tool steel, as it contains a high percentage of phosphorus which tends to make the steel weak and brittle. For steel that is to contain not more than 1.25 per cent carbon, charred leather is recommended. For obtaining a higher carbon content, use charred hoofs or horns, or a mixture of the two. The leather, hoofs or horns can be used repeatedly by adding a quantity of new material each time. A mixture of charred leather and charcoal is used for pack-hardening. The work should be so packed that it does not come in contact with the box. First, place a layer of carbonizing material in the bottom and then a layer of the work, no two pieces touching each other. When treating gauges or parts that are likely to spring, they should be so packed that there will be little liability of springing when they are drawn up through the packing material. The parts should not be plunged into the quenching bath, as it is better to handle the pieces separately. It is a good plan to attach a piece of iron wire to each part to facilitate the removal from the box. If there are several layers of work, the wires should be so arranged that the various layers can be taken out in the proper order, beginning with the top row. The temperature for pack-hardening should be as low as is consistent with the desired results, and should be uniform throughout the box. To gauge the heat, holes may be drilled through the cover at the center so that test wires (say $\frac{3}{16}$ inch diameter) can extend to the bottom of the box. When the latter has been in the fire long enough to heat the contents to about a dull red (as near as can be judged) a wire is withdrawn; if it is red hot, begin timing the heat; if not, wait and draw another later, the test being continued until one is withdrawn that has the desired heat. The length of time necessary for heating depends upon the depth of hardening surface desired. For ordinary gauges, from one and one-half to two hours after the steel is red-hot is sufficient. Ordinary work requires a temperature of about 1425 degrees Fahrenheit. Pack-hardening minimizes the danger of cracking and warping.

Case-hardening Alloy Steels — When nickel steels are heat-treated by case-hardening, nickel seems to retard the process somewhat and reduce the hardness of the "case" in ordinary carbon

steels; on the other hand, nickel tends to oppose the crystallization of the steel at high temperatures and to eliminate the consequent brittleness. The steel should first be quenched from a temperature of 1750 degrees Fahrenheit. It is then given a second heating to 1375 degrees and is again quenched. After cooling to about 1275 degrees, a single quenching from 1275 degrees gives the greatest hardness in the case, but not the greatest tenacity in the core. Quenching from 1375 degrees Fahrenheit gives a somewhat higher tenacity, but a slightly lower hardness in the case. A 6 per cent nickel steel should be quenched first from 1550 degrees, and after reheating, from 1450 degrees. Since this high nickel percentage almost completely prevents the brittleness of the core, one quenching from about 1300 degrees Fahrenheit is in most cases sufficient. Steels with from 1 to 1.2 per cent chromium are sometimes used when an especially hard case is required. This element aids the crystallization of the core and the double quenching is necessary. Chrome nickel steels with a low chromium content require about the same heat-treatment as pure nickel steels. A mixture of 60 parts wood charcoal and 40 parts barium carbonate is recommended for carbonizing.

Different Methods of Hardness Testing—There are four typical methods for testing the hardness of metals. These are the sclerometer method introduced by Turner; the scleroscope method invented by Shore; the indentation test adopted by Brinnell, and the drill test introduced by Krupp.

The Shore scleroscope: in this instrument a small cylinder of steel with a hardened point is allowed to fall upon the smooth surface of the metal to be tested, and the height of the rebound of the hammer is taken as the measurement of hardness. The hammer weighs about 40 grains, the height of the rebound of hardened steel is at the point of 100 on the scale, or about 6¼ inches, while the total fall is about 10 inches, or 254 millimeters. This instrument is one of the most simple to use, and very accurate results are obtained. We had both the Shore and Brinnell instruments at the arsenal, but the Shore scleroscope was the one mostly used. Of course, where strength of materials is to be considered, the Brinnell instrument is used constantly.

This chapter is submitted as a help to students, but they should inform themselves more fully in regard to the underlying principles as well as the methods employed in the heat-treatment of steels. Every chemical reaction has a time factor. In the slow cooling or heating of steels the reaction takes place at the critical temperatures, and the products of the reactions are in a state of stable equilibrium. If this time factor be disturbed, the state of equilibrium is also disturbed. If the rate of cooling is rapid enough, the reactions which ordinarily take place on slow cooling are suppressed and the metal is maintained in the condition in which it existed at the temperatures from which the cooling began. I could continue to fill page after page of such valuable information, but you would only be burdened with information that would still be incomplete, for steels are a scientific study; a careful reading of the following books is recommended: *Iron, Steel, and Other Alloys*, by Howe; *Metallography*, by Desch; *Microscopic Analysis of Metals*, by Osmon and Stead; *Metallography of Iron and Steel*, by Sauveur.

In conclusion it may be stated that there is a tendency to overrate the heat-treatment of steels. These pages contain valuable information for actual practise, and most of these results were taken from our heat-treating department in the Small Arms Division at the Frankford Arsenal. It will be well to secure microscopic photographs of steel which will enable you to judge steel and its composition and defects. Also one must understand what a large amount of special equipment it requires to undertake the heat-treatment of actions such as the Springfield model 1903, Enfield model 1917, Krag model 1898, or Mauser action; but before attempting any such work, train yourself and secure the necessary experience; for without this special training and equipment you are only courting a considerable amount of disaster.

CHAPTER VIII

Rifle Barrel Design and Fitting

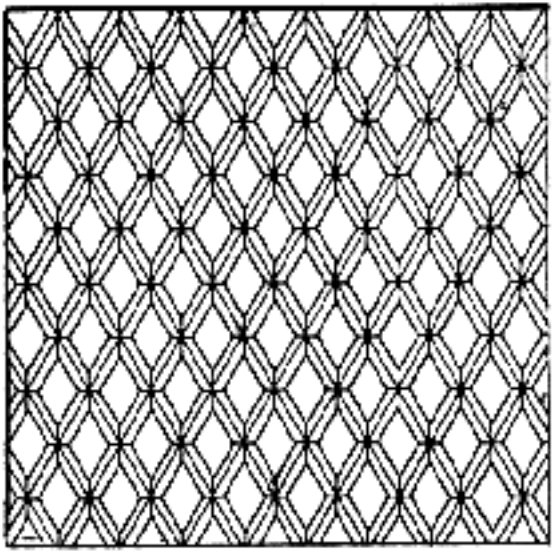

CHAPTER VIII

Rifle Barrel Design and Fitting

PROPER tools and a fair understanding of mechanics are the first essentials in the construction of a rifle barrel. Altho it is possible for any skilled and ingenious person to follow these instructions and make a barrel, there are a certain number of machine tools required to make a rifle barrel for our modern high-velocity cartridges. Some will say that it is impossible to make any kind of a barrel without complete, if not elaborate, equipment. Nothing is impossible if determination dominates. This has been demonstrated time and time again throughout the history of mankind, but the following instance applies best to our subject.

Some years ago I corresponded with a man who had spent eighteen years of his life wandering in the isolated districts of Alaska. During the course of our correspondence he told me of an interesting discovery. Deep in the interior of the country, over two hundred miles from civilization, he met one of the most ingenious men with whom he had ever come in contact. This man had set up a workshop to carry out his own ideas, using wood for almost everything except the steel tools that were required, such as reamers, etc.; his turning lathe, reaming machine, and rifling machine were made from hard wood obtained from the surrounding forests. In this workshop he made two single-shot rifles, constructing the barrels and the action from his home-made and extremely crude equipment. The steel blanks for the barrels and steel for the actions were procured from the States. The action was filed out mostly by hand, and the making of a rifling head and chambering reamers alone required a genius, for these tools are difficult for even specialized tool makers. When asked why he did not secure a Springfield rifle, which was easily available to him, he explained that he was under the impression that Springfield rifles were unsafe; thus he made these up himself, knowing them to be safe and to his liking. Then he tried them out, and found that at a distance of one hundred yards they shot as well as any Springfield.

If a man with only the most primitive means can accomplish so difficult a feat as building a firearm, certainly we who have the most modern and efficient supplies at our very finger-tips, so to speak, should become expert in using our hands to carry out original ideas where it is impossible to have these performed as one desires. We all dream sometimes of realizing some definite ambition, but are without means or perhaps inclination to secure the knowledge necessary. This knowledge is sometimes acquired through books, and again through watching an expert. All things can be accomplished if you have the patience to develop the skill that is a prerequisite in this work. Always remember that it requires hours of hard work to become experienced. The mistakes we make should only be of further value to us.

In the design of modern barrels, the purpose for which they are to be used governs their construction. For game, a barrel must be made as light as possible, considering, of course, the limits of its safety. In a hunting rifle, therefore, the barrel should be light, for this is where most of the weight is confined. We have two types of actions to consider when giving a finished arm the correct balance. On bolt-action rifles, the barrels can be made much shorter for balance, but in a single-shot arm we must apply length in order to match the difference in action length. A serious factor is presented in barrel design, particularly to those who have never applied any forethought to the subject. As an illustration, look at the number of shooters who are procuring .22-caliber M-1 barrels and fitting these to single-shot actions; the balance is out of all proportion for the action. For single-shot actions, the length of barrel should be between 26 and 30 inches; in a bolt action, 24 inches is sufficient.

Target-rifle barrels have been the theme of endless discussions, and no one knows to this day what the correct weight should be. A number of limitations are arbitrarily imposed just because Bill Jones can handle a 28-inch 1¼ straight barrel (he is six feet and weighs better than 220 pounds) and produce fine scores at long ranges; for this reason Tom Green orders the same barrel (tho he only weighs 140 pounds and is five feet seven inches tall). Long-range rifle shooting is the most difficult; it requires finer training, wider knowledge, and better physique; therefore, heavy barrels must be constructed according to the build of the individual; if one person is successful in using the heaviest barrel, other men may be defeated because of its weight.

True, weight is needed for steady holding; and it will minimize movements which flinch or jerk the trigger and prevent small muscular tremors which disturb aim so greatly. A target barrel should be designed rather muzzle-heavy, so that, in the act of holding and aiming, it has a tendency to swing slower in various directions from the target.

To reduce weight and give the desired balance to the modern sporting-rifle barrel, it is made as light as possible at muzzle with length between 18 and 26 inches; the breech or chamber end varies slightly, as Figure 50 illustrates. The straight portion is carried forward to a point corresponding to the forward shoulder at the chamber. There is usually a short sharp taper or a radius at a point approximately 1¼ inches ahead of the chamber, therefore insuring much heavier metal over the portion of the barrel containing the chamber; at this point is where the peak of the pressure comes. From the forward end of this short taper or radius there should be a continuous straight taper within four inches of the muzzle. This straight portion is made for the intended use of a ramp.

Barrel Steels — A service Springfield rifle fired from the shoulder recoils about ⅛ inch before the bullet leaves the muzzle, the point of resistance to its movement being below the center of gravity, which has then already begun to rise. The barrel is not, as often supposed, a rigid body incapable of bending; just the reverse—it is very sensitive to stress. The pressure of a finger will bend it considerably. Like any other metallic rod or tube, a rifle barrel vibrates when struck, and owing to its proportions it more closely resembles a rod than a tube in the manner in which vibrations take place. However, it is with its vibrations as a rod rigidly fixed at one end that we must be more immediately concerned. In such a state there are two types of transverse vibrations which can take place; first, fundamental vibrations in which the whole length of the barrel vibrates as a single unit, there being only one point at which the barrel is still—the location at which it is fixed or screwed into the action—"the breech"; second, a series of overtones in which the barrel is divided longitudinally into a number of vibrating sections, each terminating in a position at the nearest end—the chamber. These two types of vibrations can, and usually do, coexist. The frequency of the fundamental vibrations depends on the proportions of the barrel, and that of each particular overtone is always in a fixed ratio to that of the fundamental. The shock of the explosion naturally sets up these vibrations in a forcible manner, and they are affected more or less by the irregularities in the shape of the contour of the barrel; also by any external attachments not designed for the purpose intended, or placed in the wrong position, and also by the manner in which it is stocked. The compounded effects of the fundamental vibrations and the overtones at the time when the bullet leaves the muzzle on the inclination of the last few inches of the barrel, in relation to the axis of the bore before firing, constitute the main contributory factor in the "jump" of the rifle.

Variations in the vibrations may also arise from various other causes. As the bullet passes up the barrel, the gases behind it are exerting pressure in all directions upon the chamber and upon the bore; the entire bore is, indeed, expanded in a minute degree in the rear of the bullet. The bullet fits the bore tightly, therefore sealing it, and creating heavy friction during its passage. Any variation from one shot to another in the amount of this friction will affect not only the velocity, but the amount of movement imparted to the rifle before the bullet has reached the muzzle. Therefore, to have all bullets one size, diamond resizing dies should be employed so that bullets will come in one given diameter. The actual and relative effect of these influences will, of course, vary largely under different conditions. A heavy barrel is less affected than a light one by equal stresses. A heavy charge will set up more vibrations and general motion than a light one in the same barrel. On the other hand, when the velocity is low, the motion will have more time to develop before the bullet emerges, and consequently the whole disturbance may be equally great, tho less violent and rapid.

Steel is a variety of iron containing carbon to the extent of from 0.1 to 2.0 per cent. Other alloys are present in varying proportions, but the carbon is the most important substance, and it is to the presence of carbon that steel owes its most valuable property—that, by certain heat-treatments and methods of cooling, it can be brought to any desired state of hardness or softness within very wide limits. Steel is placed under various classifications, as the property of "hardening" increases up to certain points with the percentage of carbon contained; therefore a higher-carbon steel is employed in the barrel than would be found in a sling swivel or butt plate. In the case of the barrel steel employed, a very rigid tensile-strength test is applied; the yielding point must not occur at under 50 tons to the square inch, and the test piece must not show an extension of less than 20 per cent before fracture.

Since the high development of steels these past few years, two classes of barrel steel should be used altogether for rifle barrels, regardless of caliber: 3½ per cent nickel steel and stainless or rust-proof steel. In the past, in general practise among rifle

manufacturers, barrel steels were divided into four classes:

(a) Cold-drawn steel, known as black-powder barrel steel.
(b) High-carbon steel, sometimes known as "ordnance steel."

In later years the following have been added:

(a) Alloy steel, known as 3½ per cent nickel steel.
(b) Stainless or rust-proof steel.

Under these general classifications, gun manufacturers have their own specifications as to the composition of the alloys, together with their physical properties, under which they buy their steels from the mills in the form of bars. Chapter VI is devoted to all classes of steels, and it would be well to refer to this before making a rifle barrel.

Cold-drawn or Black-powder Steel — This is the steel usually used in the manufacture of .22-caliber rifle barrels, for the reason that any lead bullet only requires a steel of a low carbon content, and the ammunition having lead bullets never develops any greater breech pressure than 20,000 or 30,000 pounds per square inch. The tensile strength of this steel runs between 45,000 and 65,000 pounds per square inch; therefore it once answered all general purposes of such ammunition. Because of the introduction of high-velocity cartridges with jacketed bullets, a change was necessary for higher carbon contents, greater tensile strength, and elasticity.

When cold-drawn steel is used for .22 or .25 rim-fire cartridges having lead bullets exclusively, this steel is very satisfactory from the manufacturing point of reasonable-priced rifles; but for finer accuracy in target barrels the higher carbon or alloy steels should be used.

High-carbon Steel — Ordnance steel is a medium-carbon steel with a high manganese and added silicon content; therefore it is being used by a number of manufacturers for high-power rifles. This steel is known as No. 1350 under the S. A. E. (Society of Automobile Engineers), and to this is added 0.25 per cent silicon. A heat treatment greatly increases its yielding point and ultimate strength. The modern practise of the heat-treatment of steels has become so complex, involving, as it does, a very definite knowledge of the thermal changes occurring in the metal as it is heated and cooled, that it is well to read as much as possible on the subject before attempting this work or going to the expense of equipment. I believe that it will be far better to rely on nickel steel and use it as a standard for nearly all rifle barrels.

Nickel Steel — This steel is best adapted to rifle barrels because of its nickel content, regardless of whether it is to be used for a high or low velocity arm. To secure the finest results from this steel it should be given a heat treatment, for when annealed it is slightly better than ordnance steel, and is still superior to it in wearing qualities. It is a little more difficult to drill and rifle than the ordnance steel; accordingly, high-speed drills, reamers, and cutters are required—with the exception of chambering tools.

Altho the heat treatment of this steel is in principle essentially like that of the plain carbon steel, the introduction of the alloying element, nickel, necessitates that the treatment be modified profoundly to raise the high tensile strength and give it greater elasticity. If this is done, it will never change even tho it becomes heated after a number of shots are fired, a common defect in high-carbon or nickel steel that has not been heat-treated.

In general, with the addition of the special element, nickel, the treatment may be modified in the following way: by the lowering of the critical ranges or transformation temperatures, which are, in plain carbon steels, stable only at high temperatures. Nickel is one illustration of this behavior.

The structural condition in which the special element exists determines largely the proportion of the steel and to a large extent the heat treatment necessary to develop the required proportion; that is, whether the added element enters into the ferrite constituent, nickel, or into a combination with the carbon, as with chromium in the latter. The special element increases the mineral hardness of the steel without increasing the brittleness to such a degree as an addition of two or more special elements will. The advantages of each may be retained and the disadvantages largely neutralized, as in chrome-nickel steels, which as a type probably represent the best all-around alloy steel in commercial use for barrel making.

I conducted exclusive tests with these two steels in rifle barrels and found that the nickel steel with a percentage of chromium and vanadium gives the steel sufficient tensile strength and elasticity limits so that it can be turned on a lathe from the $1\frac{5}{16}$-inch bar down to 0.56 inch on a taper to the muzzle, at high speed, the length of the barrel being 34 inches. By using a high speed and a coarse feed, the entire tube was turned upon this taper and only showed about 0.003 inch out on the inside after it was completed and allowed to cool. Such steel is known as "AAA" and is made by the Ford Motor Company.

In these tests it was necessary for the steel to be

"normalized," which may be considered under the head of annealing. It consists of heating the steel above the critical range after the drill has been passed through and a roughing cut taken over the entire length of the bar in order to have the outside and bore concentric with each other before the barrel is placed in the furnace. The usual rule for normalizing any steel is to heat it above the critical range and cool it in air, which serves to put the steel in an undressed condition of fine crystal size and arrangement; in these tests, however, the furnace was turned out and the steel and furnace were allowed to cool, which gave it a better physical proportion and did not allow the friction or the heat generated by the turning tool to spring it out as on ordinary barrel steel.

After this roughing operation, another normalizing took place which could be called double annealing; this was done for maximum grain refining. The steel was heated to a temperature somewhat above the critical range, air-cooled for three minutes out in the open, and then quenched in oil, followed by reheating to a temperature just below the critical range. The completion of the reaming and finish-turning took place, and also the rifling, chambering, and final fitting.

The toughening or hardening must be just above the critical range, and the barrel should be heated long enough to insure complete grain refining; too high a temperature must be avoided. Since the normalizing temperature is above the critical point, it places the steel in a fine crystal form, so this must be watched; otherwise, when placed in the tempering bath, too great a change takes effect and allows the barrel to warp the slightest amount, which cannot be straightened by pressure or any other means. If it is held just a little above the critical range the barrel comes out very straight. The oil bath imparts to the steel a very tough surface and greatly lengthens the life of the barrel.

The making of a rifle barrel by such methods requires rather large furnaces and other elaborate equipment, but the day is not far distant when perfect rifle barrels will be made, particularly to satisfy the target shooter. Such barrels will be expensive; but when all rules of precision are used and a perfect barrel is made, the conditions of sports will change so that to predict future results will be almost impossible, except, of course, that ammunition will have to be competent for the barrels. The shorter the range, the greater would be the possibilities allowed to overcome the difficulties presented, and such barrel design together with the proper steels would overcome all discussion. Range and position governs the design of any target barrel; at the same time the sporting rifle barrel could be reduced greatly in weight and such arms would be made better in balance.

Stainless or Rust-proof Steel — This steel has been adopted by one of our leading firearm manufacturers for rifle barrels with an additional cost over the nickel-steel barrels. We have not had the opportunity to make any extensive tests with this steel of American manufacture, and so whether it will be the barrel steel of the future cannot be foretold. Some of the earlier forms of rustless steel were imported from Germany and Austria, such as Poldi "Anticora" steel and Boehler "Antinit," which were used for rifle barrels. Both steels are very hard to drill, ream, and rifle, and require the importation of special tool steel. The American so-called "stainless" steel has a high percentage of chromium content; therefore we must place it under the head of a special alloy steel with a copper content also. None of these steels are really rust-proof; all will rust if given enough exposure to the elements, but they are much more resistant to rust than other barrel steels. All these rustless steels are so resistant to rust that it takes as many as twenty applications of the bluing solution to bring out a satisfactory blue appearance. Before the solution can be applied, a special coppering process must be first applied and then subjected to the bluing solution, which really turns the copper to a black-gray color, except Formula No. 1, Chapter XVI, which takes on stainless steels. As stated before, all these steels are very difficult to operate upon. This, in addition to the high original cost of the steel, makes these barrels much more expensive than the ordinary nickel-steel barrels, with the added difficulties taken into account.

If the bore were given a treatment of chromium plating, the nickel steel would be far more satisfactory than any form of rustless steel made. A perfect heat-treated nickel-steel barrel, given a plating of chromium in the bore—or a higher-grade alloy than chromium—would solve the problems of rust and produce a far better barrel, incidentally eliminating friction to a greater extent. Such alloys would completely fill the small invisible grooves left by the barrel tools and give the interior a highly polished surface which would be difficult to secure without using a diamond cutter in the rifling head.

Standard Barrel Design — A rifle barrel must have a certain wall thickness in order to be safe against bulging in the chamber when using a high-velocity cartridge; bore pressure is also a vital factor; therefore steel of a hard texture is required. Figure 48 illustrates the standard barrel for sport-

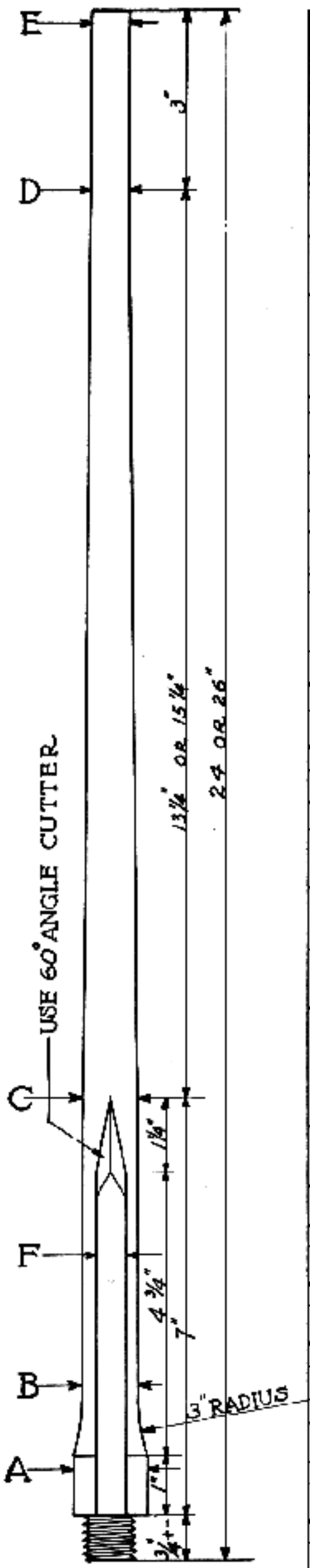

Fig. 48
Standard rifle-barrel design

STANDARD BARREL DIMENSIONS

CALIBER	A	B	C	D	E	F
250/3000	1.125"	.750" to .775"	.700" to .725"	.566"	.566"	½"
6.5 M/M	1.20" to 1.21"	" "	" "	"	"	"
7. M/M	1.200" to 1.225"	.775" to .800"	.725" to .750"	"	"	"
275 MAG	1.225" to 1.250"	.850" to .875"	.750" to .775"	"	"	"
280 ROSS	" "	" "	" "	"	"	"
30/06 GOV'T	" "	" "	" "	"	"	"
300 MAG	" "	.875" to .900"	.775" to .800"	"	"	"
375 MAG	" "	" "	.825" to .850"	.630"	.630"	"
404 MAG	" "	.900" to .925"	.850" to .875"	.690"	.690"	9/16"
10.75 M/M	" "	" "	" "	"	"	"
416 MAG	1.25"	.925" to .950"	.875" to .900	"	"	"
505 MAG	1.275"	1.025" to 1.050"	.950" to .975"	.815"	.815"	.60"
VERY LIGHT 30/06 GOVT	1.20 to 1.21	.825"	.725"	.566"	.566"	.50"
LIGHT 250/3000	1.125"	.700		"	"	

SELECTION OF STANDARD CALIBERS FOR BOLT ACTIONS

CALIBER	NO OF GROOVES	TWIST	WIDTH OF GROOVE	WIDTH OF LAND	GROOVE DIA	LAND DIA
.505" MAG	8	1 IN 16"	.115"	.0795"	.5055" .5045	.4955" .4945
.404 MAG	6	1 IN 14"	.140"	.075"	.4240" .4230	.4145" .4135
.400 WHELEN	6	1 IN 14"	.140"	.075"	.4035" .4025	.4115" .4105
10.75 M/M	6	1 IN 13.4"	.140"	.075"	.4240" .4230	.4145" .4135
.375 MAG	6	1 IN 14"	.112"	.080"	.3760" .3750	.3680" .3670
.35 WHELEN	6	1 IN 16"	.106"	.078"	.3575" .3570	.3505" .3500
.300 MAG	6	1 IN 14"	.095"	.062"	.3085" .3080	.3005" .3000
.30/63	4	1 IN 10 or 12"	.170"	.058"	.3085" .3080	.3005" .3000
7 M/M	6	1 IN 10"	.090"	.055"	.2855" .2850	.2767" .2760
.270 WINCH.	4	1 IN 10"	.154"	.058"	.2785" .2780	.2705" .2700
.25 NIEDNER	6	1 IN 12"	.076"	.055"	.2575" .2570	.2505" .2500
.22 NIEDNER	4	1 IN 16"	.073	.04"	.2235" .2230	.2175" .2170
.22 LONG RIFLE	4 or 6	1 IN 16"			.2235" .2230	.2175" .2170

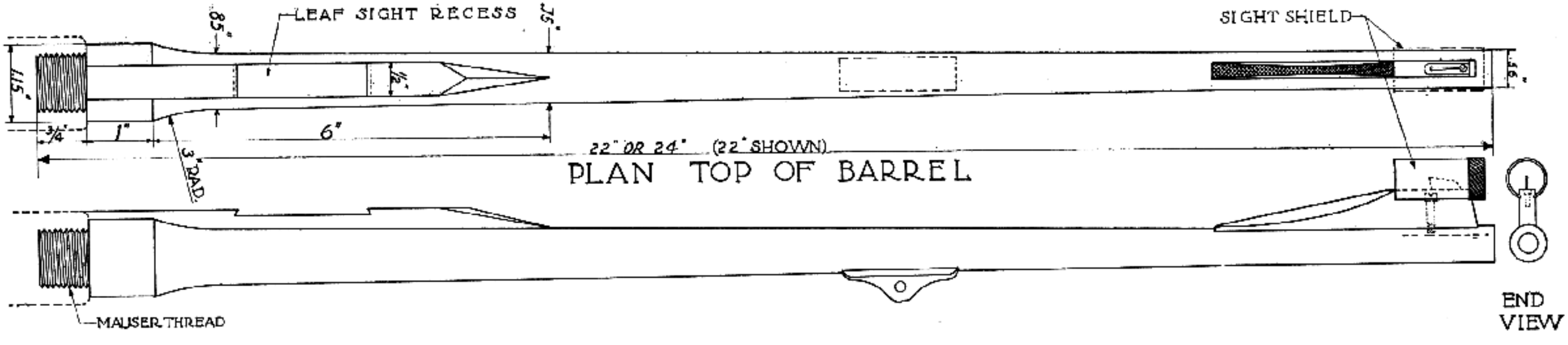

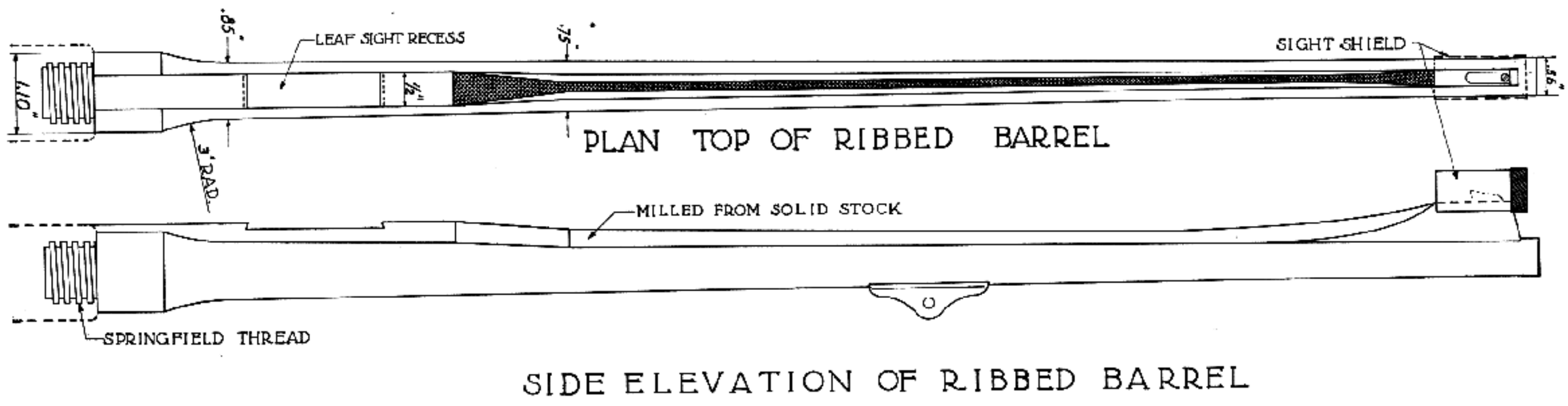

Fig. 49
Rifle-barrel designs—Ribbed and three-quarter ribbed

ing arms, as roughed out, and Figure 49 shows the finished barrel together with a rib barrel integral with the tube; also the fastening for the sling connection, whether quick-detachable or swivel-bow. This may also be integral with the barrel the same as the front-sight ramp, but the one at the top in Figure 49 is sweated in place and held with a screw; every part which is essential should be integral so that all will be solid. Of course, when any parts such as the ramp swivel base or rear sight base can be satisfactorily sweated, suitable screws should be used as well. The rear leaf-sight base should be a part of the barrel if open sights are to be used, and the sight rib and top of receiver should be flush, allowing the use of very low leaves. A light barrel on which the rib extends up a certain distance could be milled out with a shotgun rib effect with a small-end mill or slitting saw, not only to produce a pleasing appearance of the rib but at the same time to reduce weight considerably.

In the design of a modern barrel, weight and balance of the finished arm must be well considered, particularly on a sporting arm. A hunting rifle should be made as light in weight as is consistent with fine accuracy and moderate recoil, and should balance particularly well a short distance in front of the trigger, so that it will handle and move quickly for quick snap shots and shooting at running game. In a target-rifle barrel there should be weight enough to hold it steady. Yet some regard it as a scientific toy with which the target shooter attempts absolute accuracy and allows himself every artificial aid he stumbles upon—foremost the long heavy barrel. It is doubtful whether all things can be equal or if this barrel of precision cannot be looked upon as a miniature piece of artillery rather than a small arm; but to the gunmaker it is as interesting as some of the suggestions he is often confronted with.

Barrels intended for target shooting, regardless of caliber, should be governed by the build of the individual. The very heavy "free rifle" barrel used in the International Matches—No. 8 barrel (Figure 50)—would be the top barrel, which has no taper in its entire length. This barrel when made between 28 and 30 inches in length is usually advisable for a rather large person, but a smaller person should first test it thoroughly and then cut it off until he can hold it steady and at the same time minimize muscular trembling. Target barrels should be near the same diameter as the receiver in order to place the greatest weight as near the receiver as possible, and this straight portion should continue about eight inches ahead, and then have the gradual taper of the muzzle. Such a straight section is better for the mounting of telescope bases where two blocks are mounted low. The ideal weight for a target

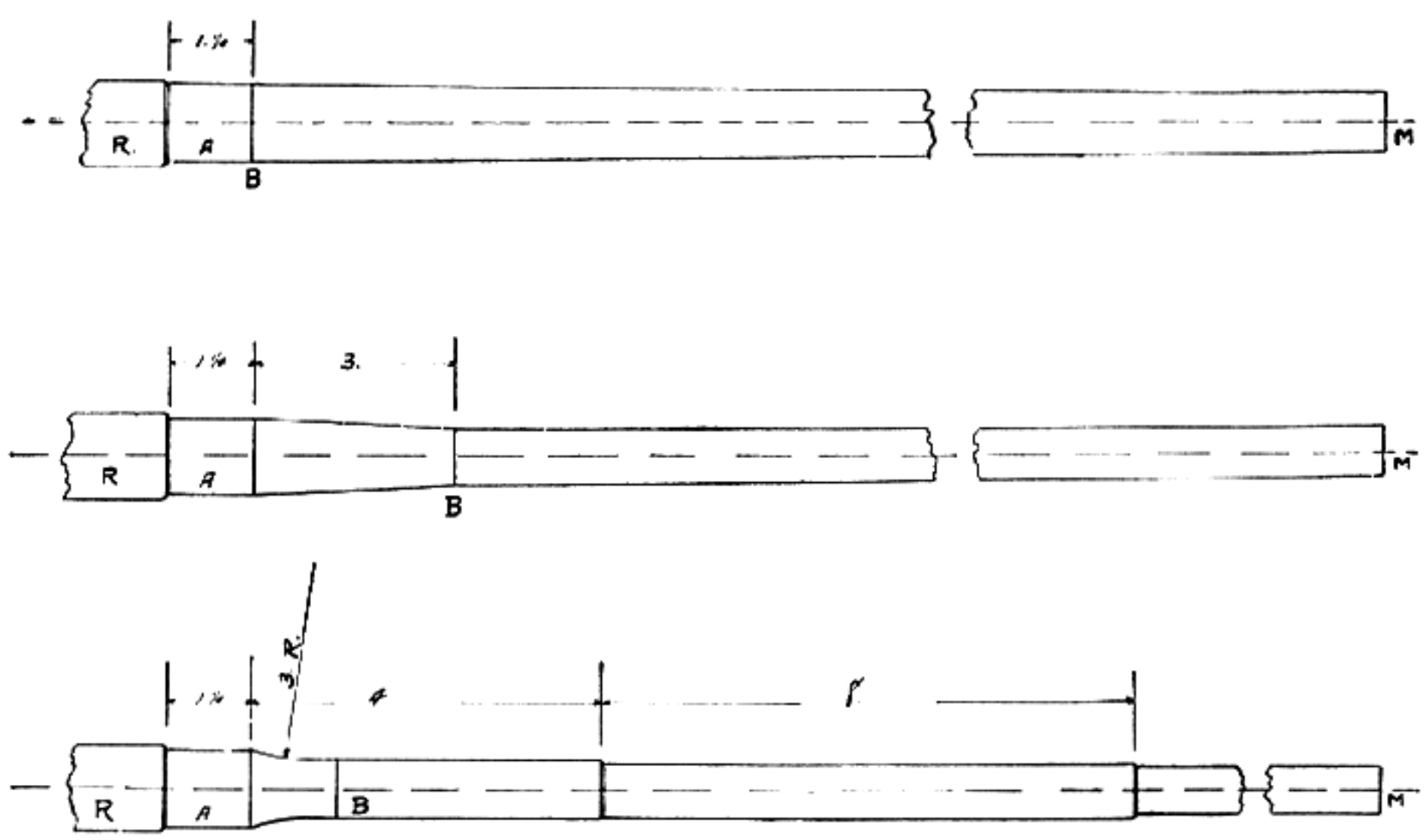

Fig. 50
Barrel design. Size to govern weight

Number	*Diameter at "A"*	*Diameter at "B"*	*Diameter at "M"*
1	1.00	.75	.50
2	1.05	.85	.56
3	1.15	.95	.647
4	1.15	1.00	.700
5	1.20	1.05	.750
6	1.20		.875
7	1.25		1.00
8	1.25		1.25

barrel is difficult to define, for every one has his own idea on the subject.

It will be noted in Figure 48—Standard Barrel Design—that a number of the barrels have, at *E*, a diameter of 0.566 inch. This size is better for a more perfect balance and at the same time has a better appearance with the inclined ramp sweated in place at the top without an encircling band.

Many riflemen prefer the encircling band on the ramp to have more material for strength. Encircling bands on ramps have been a standard for the past ten years or more, but styles change in firearms as well as in clothes and the wise person usually adopts something with a better appearance. In the tables shown in Figure 48, one has a choice of barrel dimensions; but for the average person a suitable weight is a varying question in a sporting arm; therefore we must treat the question from an angle that all gunmakers have adopted. Accuracy is the first consideration and balance follows. To reduce weight in any barrel from a given standard for accuracy requires due consideration for the balance and at the same time recoil. Here is where stock design must be freely consulted to have both made in proportion, as weight in a barrel can often defeat the real purpose of balance in a standard designed stock; consequently, a stock must be made in proportion to the barrel weight.

Because barrel length has been considered but slightly, let me say that 24 inches in length is generally the standard from which nearly all hunting ballistics are obtained. We must regard this as a standard except for those in the magnum class, which should be 26 inches. The longer the barrel, the higher the muzzle velocity a given cartridge will develop. In the Springfield Model 1903 rifle and Model 1906 cartridge, a reduction of one inch in barrel length is equivalent to approximately 25 f. s. lost in muzzle velocity. On the Krag using the old W. A. powder, which burns more completely in a short barrel length, the difference between a 30-inch barrel and one cut off to 22 inches is only 60 f. s. lost in muzzle velocity. As the barrel is shortened, muzzle blast, flash, and report become greater, and because of these objectionable features many men disparage the advantages of short barrels, particularly when discovered by themselves. In high-velocity arms 20 inches should be the minimum length for rifles in the caliber .30 class, 18 inches the minimum length for .25 caliber, and 22 inches for the .505 Gibbs, .416 Rigby, .404 Jeffries, and .375 Holland & Holland magnum cartridges.

It is fallacious to suppose that the longer the barrel the better will be the accuracy. The most accurate length for caliber .30 barrels is between 24 and 28 inches, but it is impossible to say that a 28-inch barrel is more accurate than one measuring 24 inches. In fact, the longer the barrel, the greater the friction, and as the pressure in a caliber .30 Model 1903 at 22 inches is only about 8000 pounds at the muzzle, and as it requires between 110 and 2200 pounds to expel a bullet from a barrel, nothing is gained with the longer barrel except sight radius. Of course, when iron sights are used, the longer sighting radius reduces errors to a minimum; also, some men can hold and swing a gun more steadily when firing offhand with a long barrel than they can with a short one. Rifle barrels are usually shortened on hunting arms for the purpose of better handling on horseback and in the brush. One-fourth inch of barrel length at the muzzle of a Springfield rifle of the service type weighs 128 grains. To find the weight of a round bar of steel, square the diameter in inches and decimals of an inch and multiply by .2225; the result will be the weight in pounds of a section 1 inch long. To find the weight of a rifle barrel or a section of such a barrel, first find the weight of a bar of the outside diameter of the barrel and subtract from it the weight of a bar the diameter of the bore.

Barrels for .22 caliber rim-fire cartridges can probably be made as light as 0.600 inch at the breech and 0.400 inch at the muzzle if made of good steel. A barrel measuring 10 inches long fired from a machine rest may group as closely as one inch at 50 yards with suitable ammunition. The .22-long rifle cartridge seems to give its maximum muzzle velocity in a barrel between 18 and 22 inches long. It is doubtful if any increase in accuracy results from increasing the length over 24 inches or the diameter over that given for the Springfield sporting-type barrel. Both weight and length are given to .22 caliber barrels to give proper appearance and balance, and to maintain a weight and swing that will enable the shooter to hold the rifle steady. The Model 52 Winchester rifle has quite a heavy barrel of 28 inches, and the expert shot finds it very convenient from the standpoint of hard and steady holding in all positions. Still, the same rifle could probably be fitted with a light 18-inch barrel, and from a machine rest test, a short barrel should give as good average groups as the long and heavier barrel.

Turning Barrels — The modern barrel design not only calls for a lathe-turning operation, but a milling-machine set-up as well, in order to perform the various cuts illustrated in the drawings. All this work must be done after the barrel is drilled. Turning down a rifled barrel such as the Springfield or any other of private manufacture, to reduce

its diameter and thus lighten it, almost invariably results in releasing strains in the steel to such an extent that the barrel will be bent considerably. When a military barrel is turned without using a well-ground lathe tool, the heat generated from the tool will cause the barrel to spring continually, and before the tube is down to the correct dimension it will be out in some cases as much as ½ inch. This must be straightened before it can be used. If military barrels are only turned the slightest amount—for instance, where the rear-sight fixed base has been removed—this exposed spot looks very unsightly left in the form when the base is pressed on. The barrel should be placed in a lathe and this rough place turned to a neat radius or a long angle, and then the spline-cut filled in with four 8 x 36 screws. The tap drill should only go down to a depth of a little more than ⅛ inch. After the holes are tapped, the screws are set in place and cut off about 1/16 inch higher than the surface and then hammered over and filed flush with the surface. After all this is finished the barrel is draw-filed and polished for the bluing operation.

Before the barrel can be turned, barrel plugs must be made as illustrated in Figure 51; one for the chamber and one to fit into the muzzle. These must be hardened and ground on centers. If made of soft steel they are liable to gaul in the bore, thus ruining the barrel to the length of the plug. The straight portion which fits into the bore must be just a free push fit on the top of the lands, and the center must be lapped so that it does not cause undue friction on the dead center.

In the turning of any barrel, I am assuming that the person has the necessary machine-shop experience to enable him to perform this operation successfully, and to know the essential moves to make; but the first time one attempts the turning of a military barrel it is well to know some of the correct methods employed. The first stage of the operation is to place the chamber and muzzle plugs into the barrel and run the barrel between centers, attaching a lathe dog to the breech end and tightening the driving plate with a belt lace wound around the dog and back of plate, holding the barrel tight against the live center. With the barrel running between centers, the question arises, What amount of metal should be removed? If a considerable reduction in diameter is to take place, it will be necessary to employ the steady rest and place it well back against the breech end. Turn a true spot and locate the steady rest there, the adjusting arms just touching the turned spot on the barrel. When this is in place, draw back the tailstock center and see just how true the barrel is by the way it runs out at the muzzle. If it is an absolutely true barrel, the muzzle plug should run perfectly true. Having thus made this set-up, proceed with the turning operation.

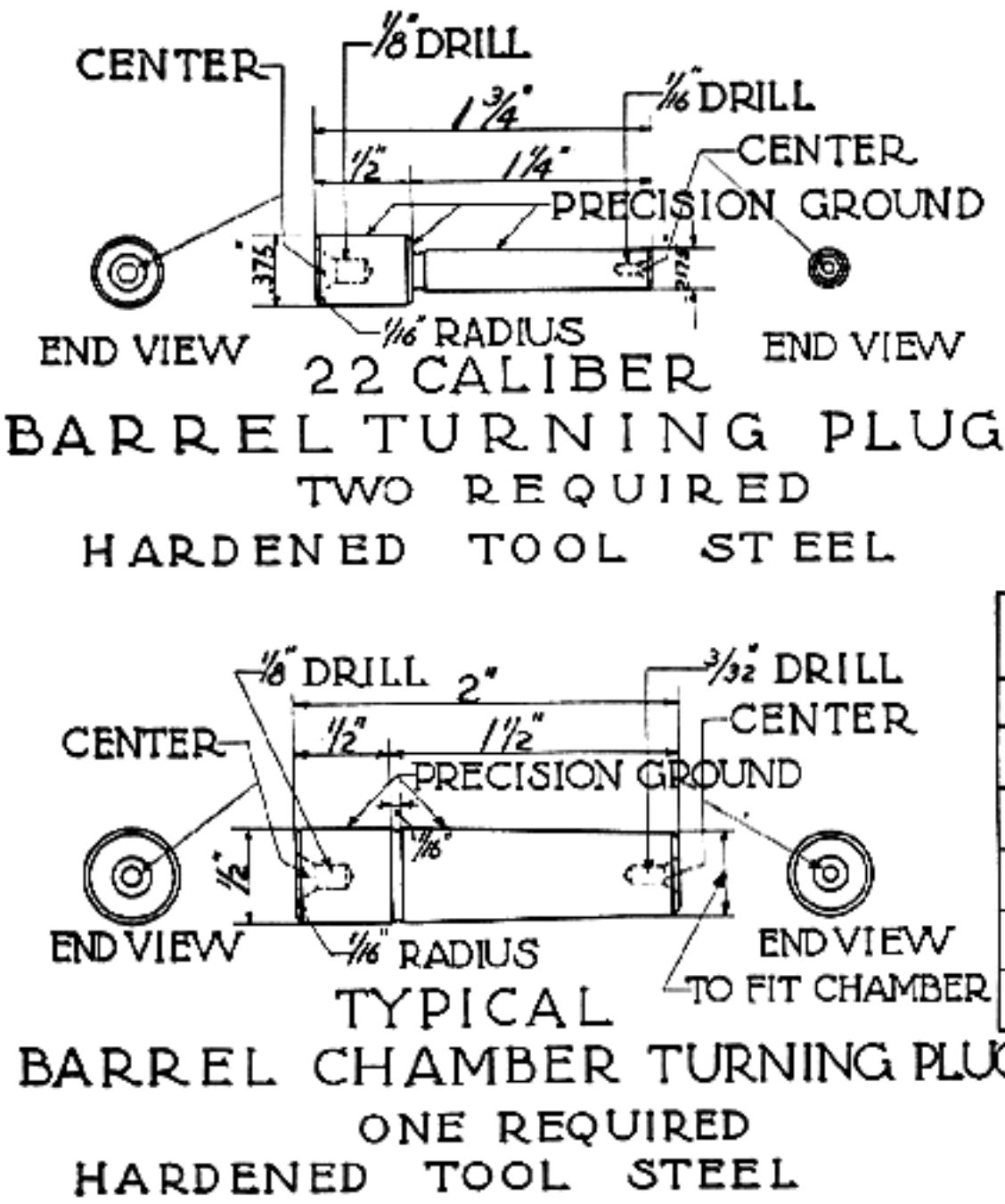

STANDARD SIZES FOR TYPICAL PLUG			
CALIBER	A	CALIBER	A
.22"	.2175"	.35"	.3497"
.25	.2495	.375	.367
7 M/M	.2755	.404	.403
.30	.3000	.405	.414
.32	.3110	.505	.504

Fig. 51

Barrel turning arbors. Many barrels are ruined if these centers are not used when turning a barrel on a lathe

Sometimes when a barrel only needs to be trued up, a steady rest is not necessary, for there is not enough metal removed to generate sufficient heat to spring it any; therefore the complete turning can be done. A coarse feed is best to use in all barrel-turning, even tho a light chip is removed, for this reduces friction to a minimum. The turning tool must be ground to a very small round nose, and the rake must also be ground well back so that when a cut is taken the chips removed will come off the barrel as tho you were cutting a piece of lead with a wood chisel; the cuts should come off long and slender. The setting of the tool must be well above center so that it is possible to remove such chips. With a long piece of steel between centers, as soon as a barrel becomes the least bit warm, expansion takes place; therefore the dead center must be loosened often to take care of this, for in many cases it is the cause of a barrel being sprung. When purchasing a Springfield Model 1903 rifle, it is best to specify the National Match rifle for the purpose of remodeling; these barrels do not have as much metal to remove as the standard sporting barrels, and it is therefore possible to make them into lighter sporting arms having a finer balance.

Barrel Turning — If a barrel is drilled and then rough-turned, provided the proper "normalizing" process has been adhered to, there should be very little spring to the steel. If it does spring, the bore must be made perfectly straight again. Whenever a piece of barrel steel has been rough-turned, causing it to heat up, thereby releasing strains, it is important that the bore be made straight and held that way throughout all operations; this can only be done by the proper heat-treatments. When a barrel is completely finished it should never be straightened; for when straightening takes place after a barrel is heated in the act of firing, these strains are released again and the barrel begins to walk back to its original position or vary in this position. More often a crooked barrel has a light and heavy side, and such a barrel invariably fails to hold its true sighting aim. It is almost impossible to keep the correct sight adjustments as the barrel becomes heated from firing, and the expansion of the thicker wall being greater than that of the thinner wall, the barrel naturally bends itself in the direction of the thin-walled side; and the warmer it becomes the more it leans to the thin side. The only cure for such a barrel is to straighten it in the bore and reduce it in size to make it concentric. (See Chapter X.) If an extremely bad condition is encountered, it is best to make a new barrel.

Rifling — The depth of any rifling should not be more than is necessary to grip the bullet and prevent it from "stripping" within the barrel. The nearer any bullet is to a perfectly cylindrical form, free from deep grooves produced by the rifling, the less will be the resistance to the air in flight; for this reason depth of grooves must vary according to the caliber used. Ever since the introduction of the breech-loading system, with its use of cartridge case and bullet, we have seen various methods of barrel rifling. Each has had its advocates, and each new idea has been tried and proved with exhaustive tests, until today we have an even number of square lands and grooves which answer the purpose very well, particularly when fine accuracy is the prevailing argument for its keeping. Figure 48 illustrates the standard calibers as well as some of the special calibers of rifles from which remarkable accuracy has been secured. I do not have all targets to prove my statement, but the reason is obvious from the figures; the land and groove widths vary and were made in order to secure the finest accuracy; the depth of the grooves varies according to caliber. Long experience has proven that in a .22-caliber rim-fire cartridge, grooves should be 0.0025 inch deep; .25 caliber, 0.0035 inch deep, for both lead and jacketed bullets. For the .30 caliber and larger the depth should be 0.004. Large-bore Magnum rifles using jacketed bullets have a depth of between 0.004 and 0.005 inch.

It has often been remarked that grooves should be at least as wide as the lands. This only works out in theory, and it is much better to make the lands as narrow as possible to eliminate all undue friction as the bullet passes through the barrel and into the air—especially when accuracy is required at long ranges. Four grooves are sufficient for calibers from .22 to .30. Above .30 caliber it is best to employ six grooves. There is no advantage in employing any greater number of grooves except when the caliber is above .500, and then only because it is much easier on the rifling head and cutter. The fewer the number of grooves employed the less friction experienced in bullet flight and also in barrel manufacture. The odd number of grooves would work best on the theory that no groove would be opposite another and this would relieve friction to the lowest point as the bullet passes through the barrel. Having lands and grooves opposite each other does not give the bullet a chance to relieve itself in its passage through the bore. But a barrel made with an odd number of grooves and lands, such as 3, 5, or 7, will reduce friction. If this proves out in the free use of an odd-fluted reamer or tap in operation, the same naturally applies to rifling. Nearly all barrels have right-hand rifling—

except pistol barrels, which mostly have left-hand rifling; but when a new barrel is being made it is best to have the right-hand spiral.

The diameter of the finished reamed bore before it is rifled is called the "bore" or "land" diameter. The diameter of the bottom of the grooves is called the "groove diameter"; naturally it exceeds the land diameter by twice the depth of the rifling.

The groove diameter of any barrel has considerable influence on accuracy and barrel life; therefore it must be understood by the beginner who would concern himself with design and specification for rifle barrels, that groove diameter should always be made to one particular standard. Barrel manufacturers require a standard, so there should be no occasion for private gunmakers to try to adopt or copy some private company's tolerance of manufacture; for such companies must have a working limit on their tools. The only part to be considered is bullet diameter; accordingly, groove diameter should always be considered in connection with the diameter of bullets that are to be used in the rifle. Because bullets are not of a fixed size, different ammunition manufacturers having more or less tolerance to work by, it is best to find out the average diameter of all bullets and then use bullets that their figures correspond to for the groove diameter of the rifling. The groove diameter should be 0.0003 inch smaller than the maximum diameter of any bullet for the best accuracy. All bullets must be resized in the course of manufacture to hold them to a certain size. Since lead has no expansion, the lead core then will measure between 0.002 and 0.003 inch smaller than the jackets because of the compression. Then when such a bullet is forced into the rifling of the barrel it will be resized instead of being free, as it would be if the grooves were cut large. The lands also have a certain effect upon this resizing of a bullet, but not enough, for they cut a clean groove into the cylindrical portion of bullet without forming any marked impression on the under side of the jacket.

The width of groove and lands, as you will note, varies; but the latter should be held as narrow as possible and the groove width be made as wide as it can be without becoming impractical for the rifling cutter or weakening the rifling-head cutter box. You will note that in the case of the caliber .30-03 rifling the groove is three times as wide as the land; therefore the cutter box in the rifling head is cut out rather thin, and for this reason more grooves are often required, tho still holding the narrow lands except in larger calibers. This is assuming that all rifles are using the jacketed bullets, for which the lands are made a trifle wider so that it is impossible for them to turn over and be rounded when a number of shots are fired through the barrel—as is the case when softer steel is used in the barrels rather than the standard recommended.

The form of groove is also another important point to be considered for the finest results in accuracy. One side must be sharp to the bottom of the groove, while the opposite side must have a slight radius. The radius is placed on the driving side of the land, which reduces friction again as the

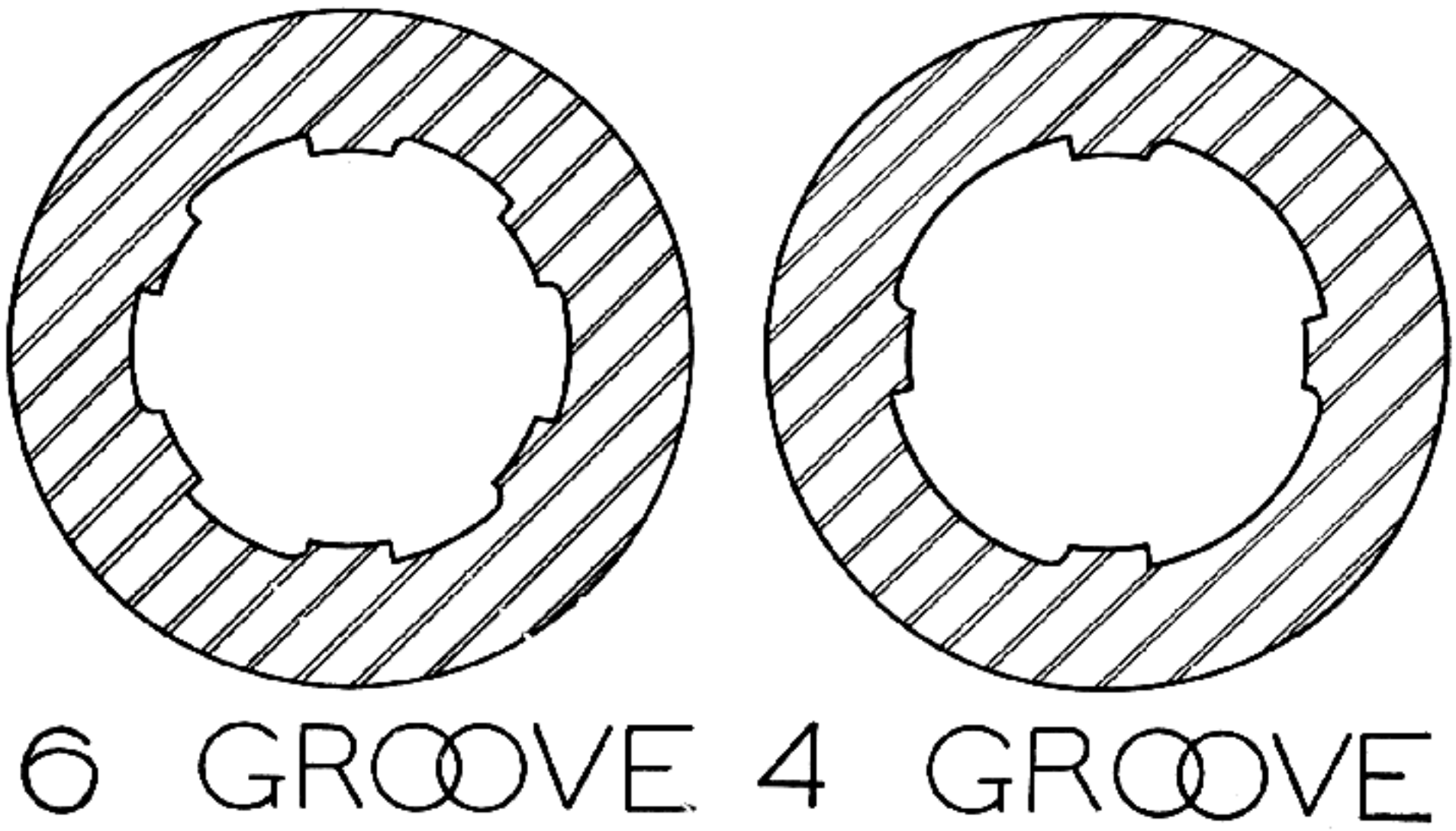

Fig. 52
Rifling. Note small radius on driving side of the lands. This type is productive of the finest accuracy

bullet is being forced through the bore; this small radius is also in the grooves of the bullet jacket and in its course of flight has no retarding action in the air as a sharp groove would have during its tremendous spinning motion through the air (similar to that of a flat propeller in water). A satisfactory form of rifling has been found and adopted, and for this credit is due to Henry, Medford, Lancaster, Rigby, and others who have had strong convictions and labored to suit the conditions of their times. In the future, some one may find a better system of rifling, but until then we shall bow to them. (See Figure 52.)

Twist of rifling must also be taken into consideration. As Figure 48 is studied you will notice that there is a variation of twist between one turn in 10 inches and one turn in 16 inches. The 10.75 mm. has a twist of one turn in 13.4 inches, which is the most practical twist or spiral for the form and weight of bullet used. There are certain elementary truths which every one who uses a rifle should be acquainted with; among them is the value of the rifling—the object for which certain twists are given to various rifle barrels, and why these twists secure the finest results. The main object of rifling is to prevent a tendency of the bullet to rotate upon its shorter axis—a tendency produced by air-resistance. Rifling, therefore, is of more importance when a conical or elongated projectile is used than when a bullet is spherical. It follows the law that the greater the length of a bullet in proportion to its diameter, the greater the need of a spiral rifling; and because other points are equal, the greater must be the speed of rotation.

The degree of twist may be correctly figured, but in common practise it is generally fixed by a number of experiments—assumed or figured either in the number of inches or feet in which a complete turn is made, or in caliber; the latter being the more exact, for it is evident that if a .40 caliber and a .30 caliber each have one turn in 12 inches, the rifling cannot be identical, but if the two barrels made the complete turn in the same number of their calibers, the twist of the rifling would be the same. It is not the intention of the present writer to attempt any explanation of the theories of mathematicians, or to explain the almost insurmountable difficulties which the problem presents. Full particulars of the formulas used to figure velocities and values are given in most gunnery textbooks. It would be well for the reader to know some of the problems a barrel maker faces, and to have a brief understanding of the different laws which govern rifling, including the one which spins a bullet on its axis during its flight. The resistance of the air varies with difference in the sectional area, shape and velocity of the bullet, and density of the atmosphere. The sectional area of an elongated bullet is circular, and the resistance increases as the square of the diameter. The increase of resistance due to increase of velocity is regular, but no law has been discovered which accurately accounts for its degree of variation. A number of theories are advanced on this subject, one of which is that rifling has a controlling influence, or bullet cylindrical bearing in the rifling and balance in relation to the bullet used, etc. The variations due to changes in atmospheric pressure or density are not inconsiderable in long-range shooting or in high altitudes, and allowance is made in sight arrangements.

Twist in rifle bores has been experimented upon so much that the person who is going to carry out certain barrel designs has his problems worked out by the tables before him. Whatever he works out must be of a radical nature and a complete departure from what has been done in the past.

Chambers and Fitting — Very few men judge a rifle by its internal appearance; the outside is the prevailing factor when passing judgment, while the most essential parts, the chamber and bore, are seldom thought of. In the fitting of a rifle barrel to an action there are either one or two shoulders to be fitted. In the Springfield Model 1903 action and other actions of a similar nature there is only one shoulder on the barrel to be considered, but on the Mauser action there are two: one on the shoulder back of the threads, and one on the face of the barrel. When fitting a barrel to the latter action, the two bearing surfaces must be a perfect fit against the face and shoulder of the barrel. On an action of the Springfield type, the thread fit must be perfect and the shoulder must be wide enough so that a tight union can be secured when the barrel is given the final tightening pull against the receiver. With tight threads and perfect union against the shoulder a barrel will never have any variations in point of impact. A barrel badly fitted to a receiver is as bad as a crooked barrel which constantly changes its grouping.

A chamber placed in a barrel in which a cartridge is at rest when in the act of firing should have a burnished, mirror-like finish when it is viewed through the action. A chamber with the least indication of circular grooves sooner or later causes trouble in the extraction of fired shells, especially in a high-velocity arm, as the brass cartridge case will make a complete moulding in any slight groove and cling to the walls of the chamber. Often lodged cases in a chamber cause the extractors to be broken in trying to remove them. If the extractor holds,

it usually slips over the recess and tears part of the head away from the case and a cleaning rod must be used to remove it. A bulged chamber will also do the same thing, and a chamber bulges easily if the proper steel is not used. I have often seen this happen on some of the magnum chambers where the wrong steel was employed. Chambers should be made with the properly designed barrel having a radius at the starting of the shoulder at the neck. At times the inexperienced tool maker, in making chambering reamers, will neglect to incorporate this radius at this point in the grinding operation and in the completed chamber; the result is a sharp corner which causes the neck of the case to part. The radius at the top of the shoulder is an easy matter to stone on the reamer, but in some chambers this is neglected. Another important point is the correct headspace, but this is taken up in another chapter. To look for perfect chambers you must look for a mirror-like polish free from any circular marks, and the final test is the firing and complete examination of the fired cartridge case. When all these check up to standards together with a perfect bore and groove diameter the barrel should perform well.

Ribbed Barrels — Refer again to Figure 49, which illustrates a ribbed barrel; this design is very appropriate when perfect outlines are desired. The Mauser factory in Germany turns out some of the finest barrels of this nature, and because of the long experience and proper tools and fixtu.es of these gunmakers there are few who can compete with them for perfect design of a solid-ribbed rifle barrel. It is possible to make one of these barrels on a milling machine by using various set-ups and a vertical milling head. In order to secure the angles or taper on the rib, a false plate must be made and fastened to the table of the machine, for the universal arrangement of the table will not take care of this. If one contemplates making such a barrel it is necessary to figure on three days' steady work; but the design, when completed in accordance with the drawing, is very unusual.

Bullet Fit in Barrels — When considering the relationship between groove and bullet diameter, we shall select the .22 caliber first. In .22-caliber barrels the best results are obtained when the bullet diameter is slightly larger than the grooves. Since bullets and barrels vary in diameter, different makers' products vary slightly from standard, but from the standpoint of difficulties encountered, the bullet should be from 0.0005 to 0.0015 inch larger than the groove diameter of the barrel to expect good work in .22-caliber rim-fire rifles. Most barrels will vary from .2225 to .2235 inch in groove diameter, and most bullets will run from 0.222 to 0.225 inch maximum diameter of bearing. Practically the desired fit can be obtained by trying various makes and lots of ammunition in the particular rifle, and selecting the lot which gives the best accuracy.

In .25-caliber high-power rifles, the groove diameter will vary from 0.2565 to 0.2585 inch. Generally, however, the barrels run between 0.257 inch and 0.258 inch. Bullets will vary between 0.2565 inch and 0.2585 inch (usually the former size). An ideal combination of both groove and bullet diameter should be between 0.2570 inch and 0.2575 inch. Excellent results can be obtained if the bullets are no smaller than 0.0005 inch, in relation to the groove diameter.

More is known in regard to bullet fit in the caliber .30 model 1903 Springfield rifle than in any other size, and in the caliber .30 the bullets which are made specially for the 30-06 cartridge run closer to standard measurements and are better than any other class of bullets when made at the Frankford Arsenal. This is one of the reasons why better results are obtained from 30-03 rifles than from any other caliber. 30-06 bullets run very regular in size, which is between 0.308 inch and 0.3085 inch, and will give extreme accuracy in rifle barrels having a groove diameter between 0.308 inch and 0.3085 inch, and still give fair accuracy in barrels which measure in the groove diameter between 0.3085 inch and 0.309 inch.

When lead bullets are used with smokeless powder in calibers larger than .22, another principle of bullet fit applies. Bullets should be cast of a rather hard alloy and should be larger than groove diameter for the best results. In .25 caliber barrels, such lead bullets should be from 0.001 to 0.003 inch. It does not appear to matter just what size the bullets are, providing they come within these figures; but, of course, a given batch of bullets must be uniform in diameter, and they also must be of a size so that when seated in the case the chamber of the rifle will receive the cartridge without undue crowding. Bullets smaller than groove diameter do not give good results with smokeless powder, altho they give fair results when black powder is used. The reason for this is that the ignition of black powder hits the bullet a sudden blow and expands it to the bore size even before it starts out of the case. But in many cases with black powder, better results will be obtained if the bullets are slightly larger than groove diameter.

Bullet seat or throating of any chamber should be so that a slight impression is given to the bullet as it seats itself in the rifling. This applies to fine

target rifles, but for sporting rifles this seat should be made just a trifle longer so that a bullet will not pull out and lodge in the rifling upon the removal of a cartridge case. Bullet seat is an essential part of any chamber. A bullet should not have a free space between the neck of the case and the rifling; if it has, it will jump into this free distance, producing not only inaccuracy but very bad erosion as the gases rush ahead of the bullet into the steel at this point. A long throated chamber not only causes inaccuracy but a loss of pressure and velocity, and an increase in erosion.

Rebored Barrels — The question often arises whether it is possible to rebore a barrel to a larger caliber. It is possible, provided the rifle and barrel are suited to the particular cartridge selected. If you have the right equipment, it will be well to do this yourself; to have it done by a regular barrel maker would cost just as much as a new barrel of that particular caliber.

The following table comprises a selection of the most popular American, British and German cartridges. It will be noted that a number of obsolete calibers have been discarded which require special cases and can only be obtained from one source of supply. When a sportsman selects a rifle for sporting purposes, he should select a modern caliber so that ammunition is procurable in all parts of the world.

Caliber and Cartridge	Make	*Groove Diameter Inches* *Min.*	*Groove Diameter Inches* *Max.*	*Bore Diameter Inches*	*Twist of Rifling 1 Turn in —— Inches*
.22 Short, R. F.	All	.22	.2238	.2175	20
.22 Long Rifle, R. F.	All	.222	.2238	.2175	16 to 17
.22 W. R. F.	Winchester	.2255	.226	.219	14
.22 W. C. F.	Winchester	.2235	.2241	.218	16
.22 Baby H. P.	Niedner	.223	.2235	.2175	16
.22 Savage H. P.	Savage	.226	.2265	.219	12
.25-20 S. S. & W. C. F.	Winchester	.257	.2575	.250	14
.25-35 W. C. F.	Winchester	.257	.2575	.250	8
.25 Rem. Auto	Remington	.257	.2575	.250	10
.25 Niedner, Spg. & Krag.	Niedner	.2565	.2575	.250	12
.250-3000 Savage	Savage	.257	.258	.250	14
6.5 mm. Mannlicher	Austrian	.263	.264	.256	7½
.270 W. C. F.	Winchester	.278	.2785	.270	10
7 mm. Mauser	German	.2854	.2874	.276	8.66
7 mm. Mauser	American	.2845	.2855	.276	10
.280 Jeffery's	British	.289	.290	.280	8.66
.30-30 W. C. F.	Winchester	.308	.3085	.300	12
.30-30 Rem. Auto	Remington	.308	.3085	.300	12
.30 Krag	U. S. Gov't	.308	.310	.300	10
.30-06 Springfield	U. S. Gov't	.308	.3085	.300	10
.300 Savage	Savage	.308	.309	.300	10
.30 Magnum	H. & H.*	.3083	.3085	.300	14
.32-20 W. C. F.	Winchester	.311	.3115	.305	20
.32 Win. Special	Winchester	.320	.3205	.312	16
.32 Rem. Auto	Remington	.319	.3195	.312	16
8 mm. Mauser	German	.318	.326	.312	14
.303	British	.310	.311	.303	9 to 10
.303 Savage	Savage	.308	.309	.300	10
.32 Win. Self-Loading	Winchester	.321	.322	.312	10
.33 W. C. F.	Winchester	.338	.3385	.330	16
.35 Win. Self-Loading	Winchester	.351	.352	.334	12
.351 Win. Self-Loading	Winchester	.351	.352	.344	16
.35 Rem. Auto	Remington	.356	.3565	.348	16
.35 W. C. F.	Winchester	.358	.3585	3.50	16
.375 Magnum	H. & H.*	.375	.376	.368	12
.38 Short, Long and Extra Long, O. L.	All	.358	.359	.350	36
.401 Win., S. L.	Winchester	.407	.408	.400	14
.404 Magnum	Jeffrey's	.423	.424	.414	14
.405 Winchester	Winchester	.413	.4135	.405	14
.45-70 Winchester	Winchester	.456	.458	.450	20
.45-70 U. S. Gov't	U. S. Gov't	.451	.458	.450	22
.505 Magnum	Gibbs	.5045	.5055	.494	16

* Holland & Holland.

CHAPTER IX

Barrel Tools and Their Construction

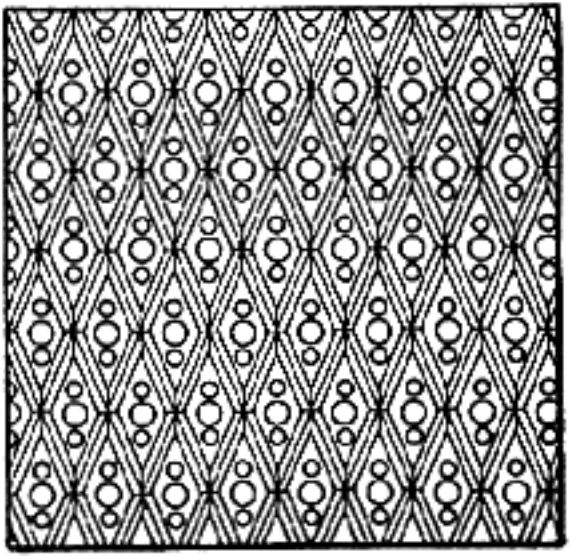

CHAPTER IX

Barrel Tools and Their Construction

THE high degree of accuracy necessary in the construction of certain classes of tools and gauges for barrel making has made it requisite for tool makers and machinists to employ various methods and appliances in order to work to the prescribed precision. Since the work of the tool maker requires an unusual degree of skill and refinement it is of the greatest importance that not only he, but those who perform the making of these tools and gauges, have the greatest interest in their work. I must emphasize one particular point, and that is the proper machinery to make these tools correctly. Never lose sight of the fact that a well organized tool room means the success of any product manufactured. Owing to the varied nature of tools required for barrels and the manufacturing of interchangeable parts, this industry involves the most exacting refinements in general tool-making practise. It is surprizing that so little has been written pertaining to tool making for firearms and cartridge manufacturing. This chapter does not attempt to cover completely those methods and operations which are fundamental to the production of firearms or ammunition; it seeks to cover only one small part of the industry—barrel tools, which require the closest of precision work.

I do not wish to convey to the ambitious, mechanically inclined reader that the making of tools for this operation can not be performed by him; on the contrary, he can develop as great refinement in his work as the most experienced tool maker who is just starting to do this class of work himself. I have seen some very good tool makers fail to master some of the simplest operations, while others with far less experience became very successful and very valuable men in this work. Accuracy is essential to practically all tool-making operations, and when the experienced rifleman takes up this branch of the work, the same extreme accuracy he insists upon in shooting will be in that most essential part of a rifle—the barrel. His conception of these requirements will lead him to develop the same patience as shown on the range. Accuracy, as every tool maker knows, requires time and more time; accordingly, all time elements must be forgotten to produce the best; one must know why every move is made before even a cut is started. Consider the conditions under which you are laboring and be guided by your best judgment.

Reamers — If it were possible to have space for this one subject alone it would fill at least three chapters, for reamers are among the most essential tools in the construction of a rifle barrel. If reamers are to produce round and smooth holes they must have cutting edges not only correctly spaced and formed but stoned or honed to a sharp cutting edge free from saw teeth. For this reason the correct steel must be selected. A common defect in reamers is chattering. This is usually caused by incorrect spacing of the cutting edges, excessive rake, or improper stoning of the flutes, which allows too much clearance for the lands or tops of the teeth. When a reamer has too much rake, it cuts too readily and produces a rough interior surface, hardly noticeable to the naked eye; whereas, excessive clearance of the lands causes chattering, and the reamers do not have proper support. The purpose for which any reamer is to be used must, of course, be determined first, for in barrel making there are three different forms of reamers: roughing, finishing, and burnishing. Some of the principal points connected with these reamers are mentioned in the following paragraphs for the benefit of those who may only have a small shop.

Strong teeth or flutes of sufficient depth are necessary to give room for chip clearance, which is one feature of the construction of a reamer regardless of its mission or nature; both these features depend on the number of teeth and the shape of the fluting cutter. In the smaller sizes such as the barrel reamers, we only have two selections in regard to the number of teeth, for the roughing both in the barrel and chamber. A finishing reamer works well with less than six flutes, and should not have more than six. Burnishing reamers always have six sides, and these are set as a standard. When constructing a roughing reamer with four flutes the lands at the top of the teeth may be left rather heavy, which gives greater support to the reamer. The lands on the finishing reamers, however, should be rather narrow. Figure

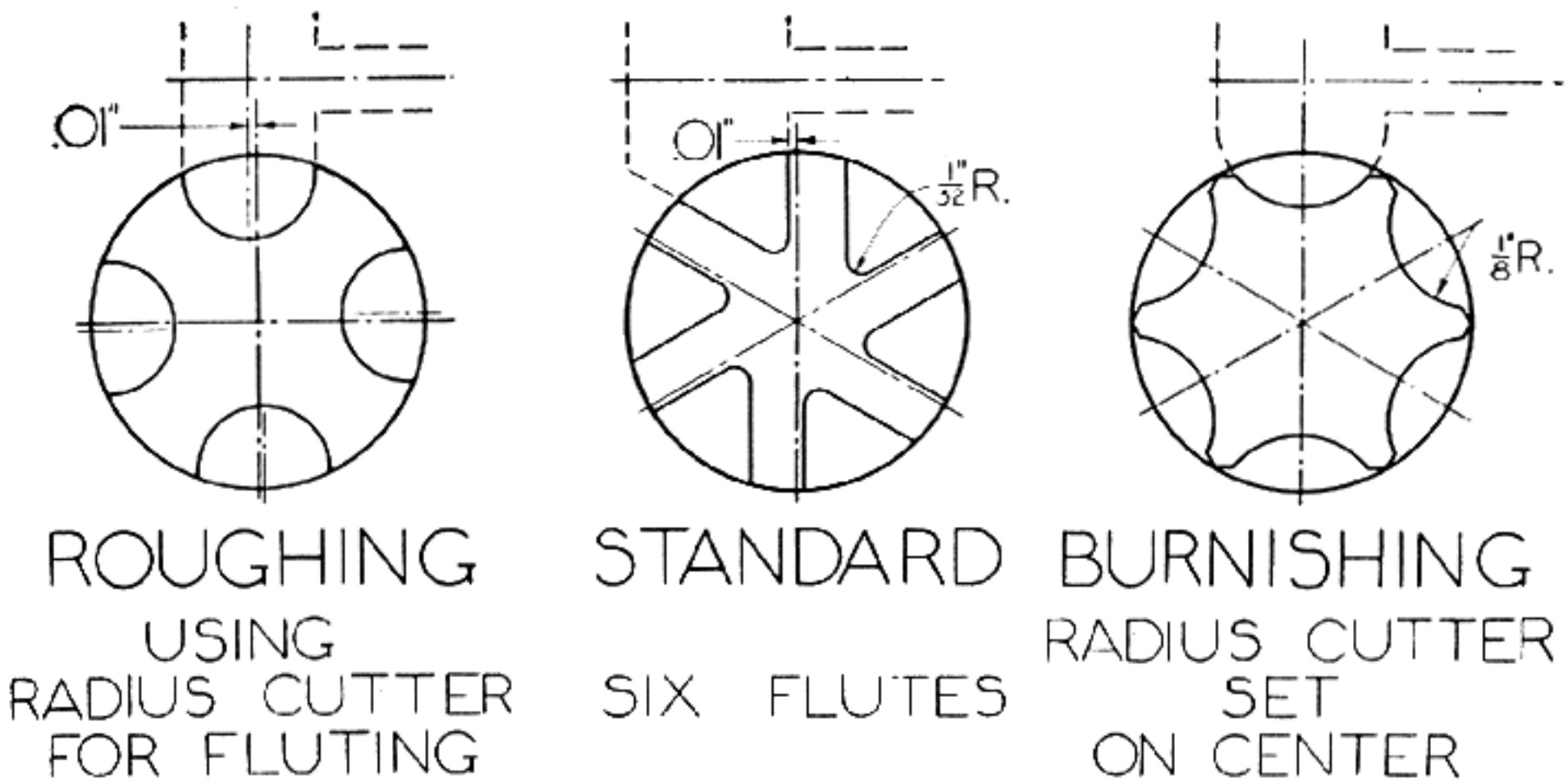

Fig. 53
Reamers. Flutes commonly used, and offsetting of flutes for milling set-up

53 illustrates three different reamers and flutes.

When fluting reamers, the cut is so set with relation to the center of the reamer blank that the tooth gets a slight negative rake; that is, the cutter should be set about 0.010 inch ahead of center as shown in Figure 53. In the construction of some reamers it is necessary to "break up the flutes"; that is, to space the cutting edges unevenly around the reamer. The difference in spacing should be very slight and need not exceed 0.002 inch for each flute. The breaking up of the flutes is usually accomplished by first setting the sides of the angle cutter 0.010 inch off center and the dial on the cross feed at zero. The first cut will be to the extreme limit. As the index head is revolved for the next flute, move the cross slide in toward the center 0.002 inch; accordingly each successive flute is cut likewise until all are cut, and the last flute will only be 0.002 inch ahead of center. When a reamer is provided with spiral flutes as shown in the finished barrel reamer, the angle of spiral should be so that the cutting edge makes an angle of about ten degrees with the axis of the reamer. A spiral reamer so constructed makes one of the best forms of reamer for finishing purposes. Such a tool reduces chattering to a minimum, but is a little more difficult to make.

Burnishing reamers are cut on the exact center with a radius cutter. The cutter selected must be wide enough to mill out the flutes and produce the desired depth. It must also allow a sufficiently flat surface when the flats or sides are formed or milled off, forming a sharp six-sided hexagon. Figure 53 illustrates the method used in the milling operation. After the flutes are milled the reamer is hardened, and then the temper is drawn to remove all hardening strain. It is now ground to a cylindrical form and only the points at the sharp edge are removed. This leaves a slight radius, and 0.002 inch oversize is left on the outside diameter for lapping purposes. The flat surface of the hexagon is lapped on all sides until a nearly sharp edge is produced on the cutter. The diameter is still 0.002 inch oversize, and the reamer is now lapped on the nearly sharp edge, removing 0.001 inch on each of the six sides or placing a faint flat upon the cutting edge. This is the edge which produces the fine burnished surface. If, in the first cutting trial for correct size of bore, it is a little oversize, more lapping may be done to reduce it to the exact diameter. A fine Arkansas stone lightly rubbed over the cutting edges will keep the burnisher free from minute scratches of pick-ups. This should be done before the reamer is started in the bore.

Barrel reamers are never ground for clearance, but stoned. Production reamers are ground, and the amount of clearance depends somewhat upon the type of reamer and its size. Such operations are very easy and simple if the proper reamer grinders are at hand. The finishing of barrel reamers must be done by hand with oilstones of various grades and sizes. The stoning operation on reamers requires practise to know just the right movements to make in order to obtain the desired results.

After a reamer is ground cylindrically, allowing between 0.0005 inch and 0.001 inch oversize, the top of each tooth is given a coating of coppering solution. This will show the exact location and movement of the oilstone at all times and the distance left at the cutting edge. Hold that small fractional edge until the final finishing, which is the fine cutting

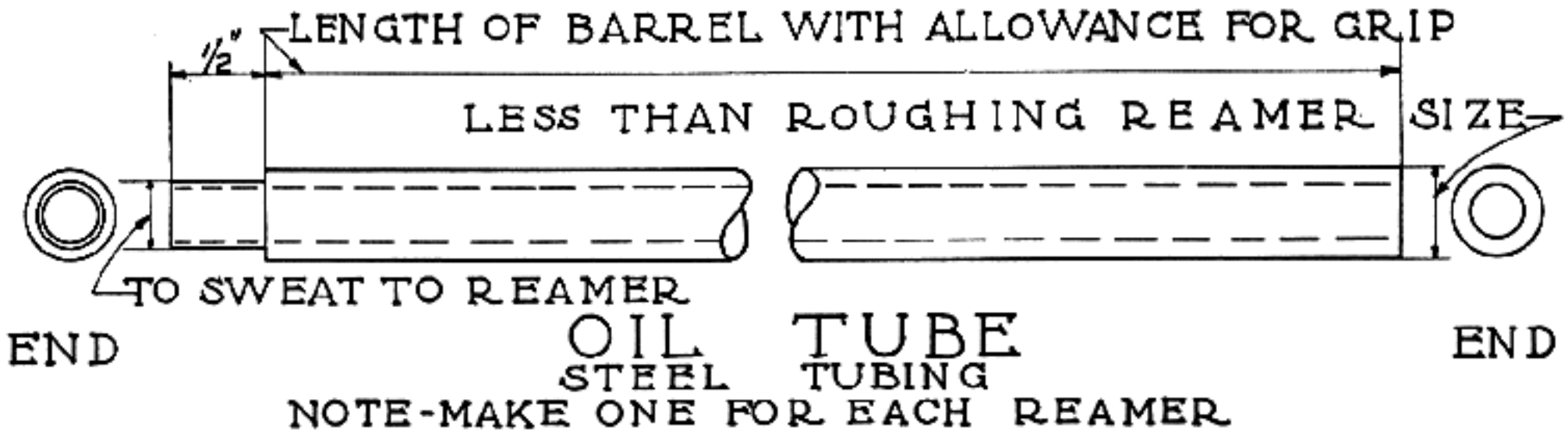

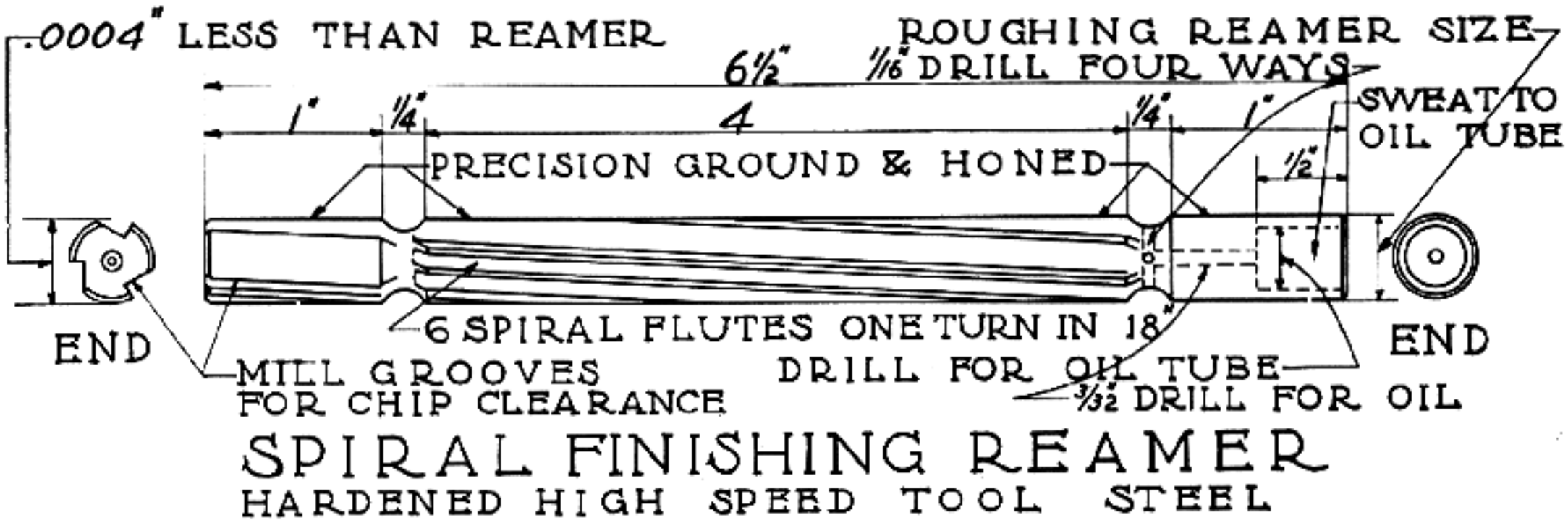

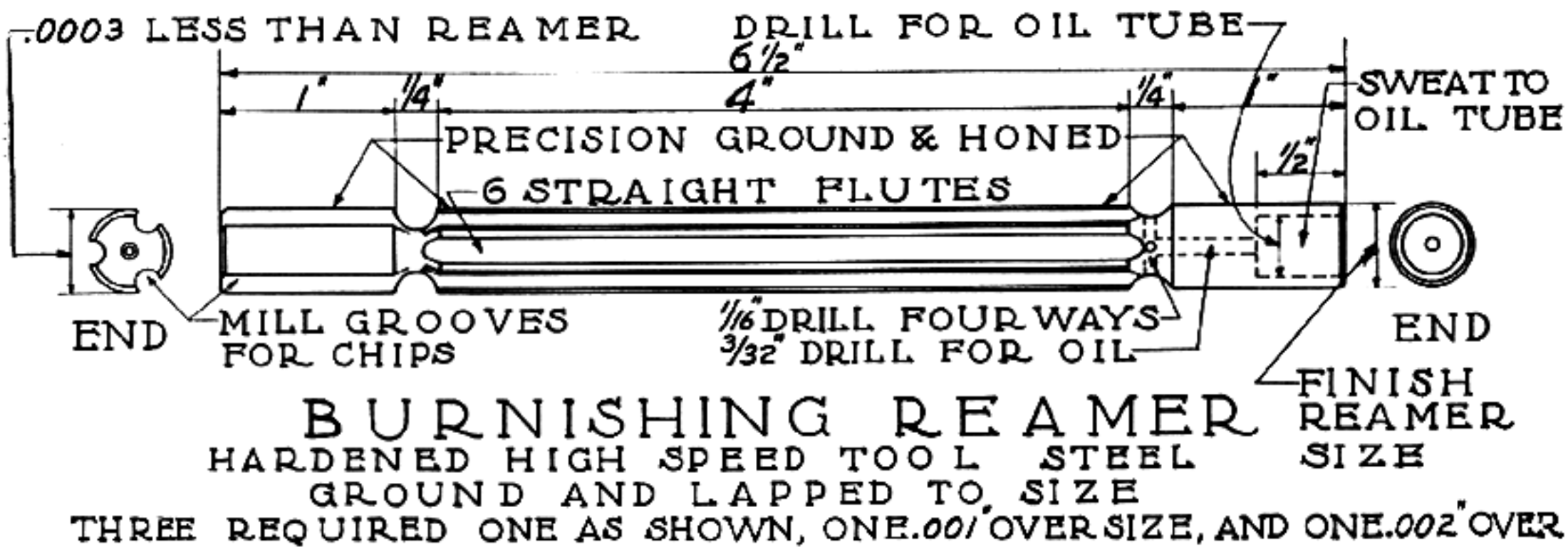

Fig. 54
Improved designs for gun-barrel reamers

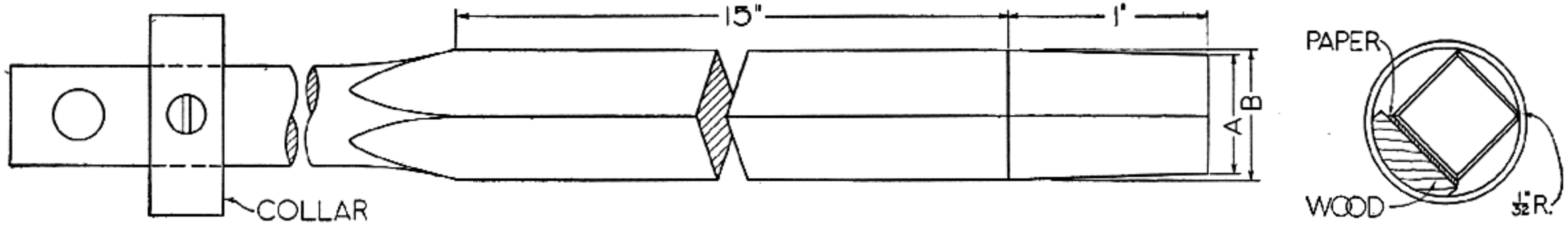

FINE BORING TOOL

GAUGE	A	B
8	0.676	0.726
10	0.646	0.696
12	0.600	0.650
16	0.533	0.583
20	0.486	0.536
28	0.421	0.471
410	0.281	0.331

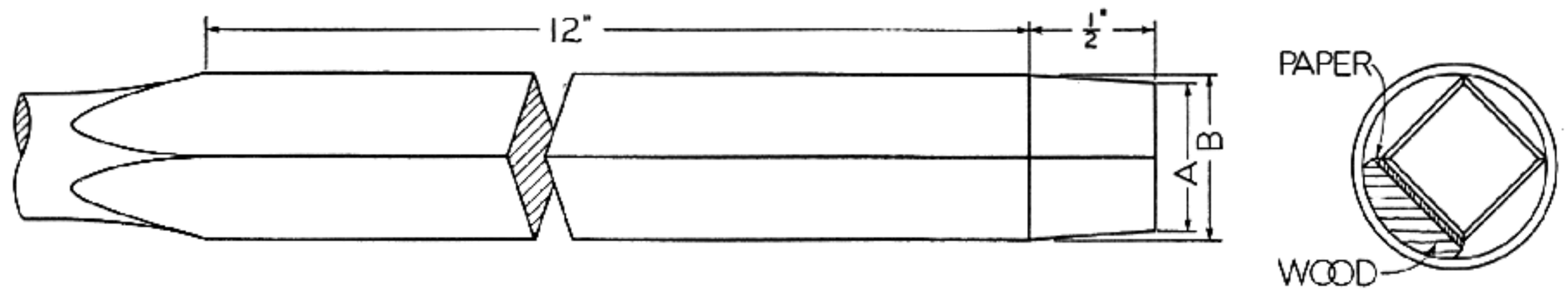

ROUGH BORING TOOL

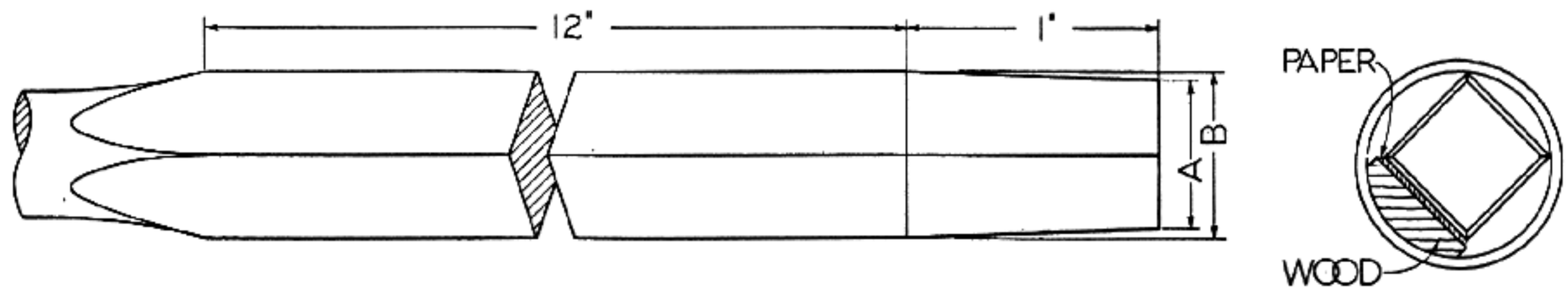

CHOKE BORING TOOL

Fig. 55
Shotgun boring tools—commonly called boring bits in the gun shop

edge. Barrel reamers require a leed or taper as they are pulled through the barrel, and the leed must be stoned even and true after it is backed off by the oilstones and brought down to the desired size. A leed is commonly stoned on the draw-in side. This leed may be of various lengths to suit conditions; it may be very short, or it may be almost entirely absent in the case of the burnishing reamers; but a little will be required in the form of a slight angle. The roughing reamer should have a leed of about one-half inch in length. The taper should measure between 0.005 inch and 0.007 inch on the side. The rear end of the reamer is also slightly tapered to prevent the ends of the teeth from scratching when they pass through the bore. Finally, the face of each flute is stoned until the cutting edge is free from any indications of milling cutter marks.

Reamers should measure from 0.010 to 0.020 inch oversize before they are hardened according to the size and the normalizing methods used with the steel selected. Those illustrated in Figure 54 are the improved style of barrel reamers with pilots on both ends. They obviate any tendency to chatter, and if there should be any little kinks or crooks in the bore they will remove them, whereas the old-style reamer would pass around them. Reamers having such lengths and undercuts must be given the proper heat-treatment so that they will only be out very slightly, if any, after they are hardened. Too much attention can not be paid the pilots to prevent them from becoming oversize from wear of the reamer. When that happens the reamer usually lodges in the bore and must be driven out.

Since any reamer will wear, pilots may be eliminated and a straight fluted reamer used as illustrated in Figure 80, No. 4. The construction of these reamers is simpler than that of the spiral reamers, but as experience is acquired the reamers with pilots will be used; then satisfactory ring gauges will be made to check all wear so that the flutes will never wear down to the pilot's size.

One reamer which may be used as an all-around reamer is the general shotgun boring bit or boring tool illustrated in Figure 55. These reamers can be made to ream any straight hole from a .22-caliber rifle barrel to the standard shotgun bore. They are used in a rifle barrel the same as they are for a shotgun barrel, except that they are pulled through the barrel; therefore it will be necessary to place a lead on the square tool near the shank end. As an illustration, suppose a reamer is to be made for a .22-caliber barrel. For better results two would be required; one as a roughing reamer, and one as a burnishing reamer to remove 0.003 inch. The roughing reamer would only be cutting on the one side, as the illustration shows for shotgun bores.

Making one of these square reamers is very simple if one has access to a surface grinder. The tool is first shaped or milled until it measures 0.015 inch over the highest point of the square, which leaves a sufficient amount of material for grinding purposes. A shank is turned on one end, long enough so that a length of drill rod can be welded on; 1.5 inch is sufficient. The length of the tool or reamer on its cutting portion should be as long as possible without causing undue warping during hardening. As an example, a tool made for a .22-caliber should be between 6 and 8 inches in length and larger calibers longer; for the greater the length the truer will be the reamed hole and bearing surface of the reamer upon contact with the interior of the barrel.

The burnishing or finishing reamer is made the same as the standard burnishing reamer, except that one side is given a small radius and the opposite side is the cutting edge; this has the small 0.001-inch flat lapped down from the sharp cutting edge. Instructions for the use of fluted reamers are given in Chapter X, but if this type of reamer is once used, it will take the place of a fluted reamer, which is only used when experimental barrels are constructed.

A newly stoned reamer has more tendency to chatter than one which has been used for some time. If there should be too little clearance the reamer will not cut freely, as the lands will rub against the walls of the barrel. In many instances the result will be a lodged and broken reamer and sometimes a ruined blank. An eccentric relief is that which is stoned on the flutes of a reamer; the land back of the cutting edge is convex rather than flat, and is used in all barrel reamers. This type of reamer holds its size longer than others.

Chambering reamers are the most difficult to construct, particularly the burnishing reamer. The roughing reamer is made similar to a counterbore, except that it is in steps, as Figure 56 illustrates. This tends to reduce the metal in the chamber, leaving the second reamer with only a minimum amount of metal to remove. Both roughing and No. 2 reamers could be made spirally, but this would be more difficult. With reamer No. 2, when made with a right-hand spiral of the cutting edges, especially when there is considerable taper, the inclination of the cutting edges in the direction of the turning movement tends to draw the reamer in and gives a better cutting action. Ordinarily, however, the flutes of both roughing and No. 2 reamers are made straight. Reamers for roughing purposes are sometimes made in a series of cylindrical steps.

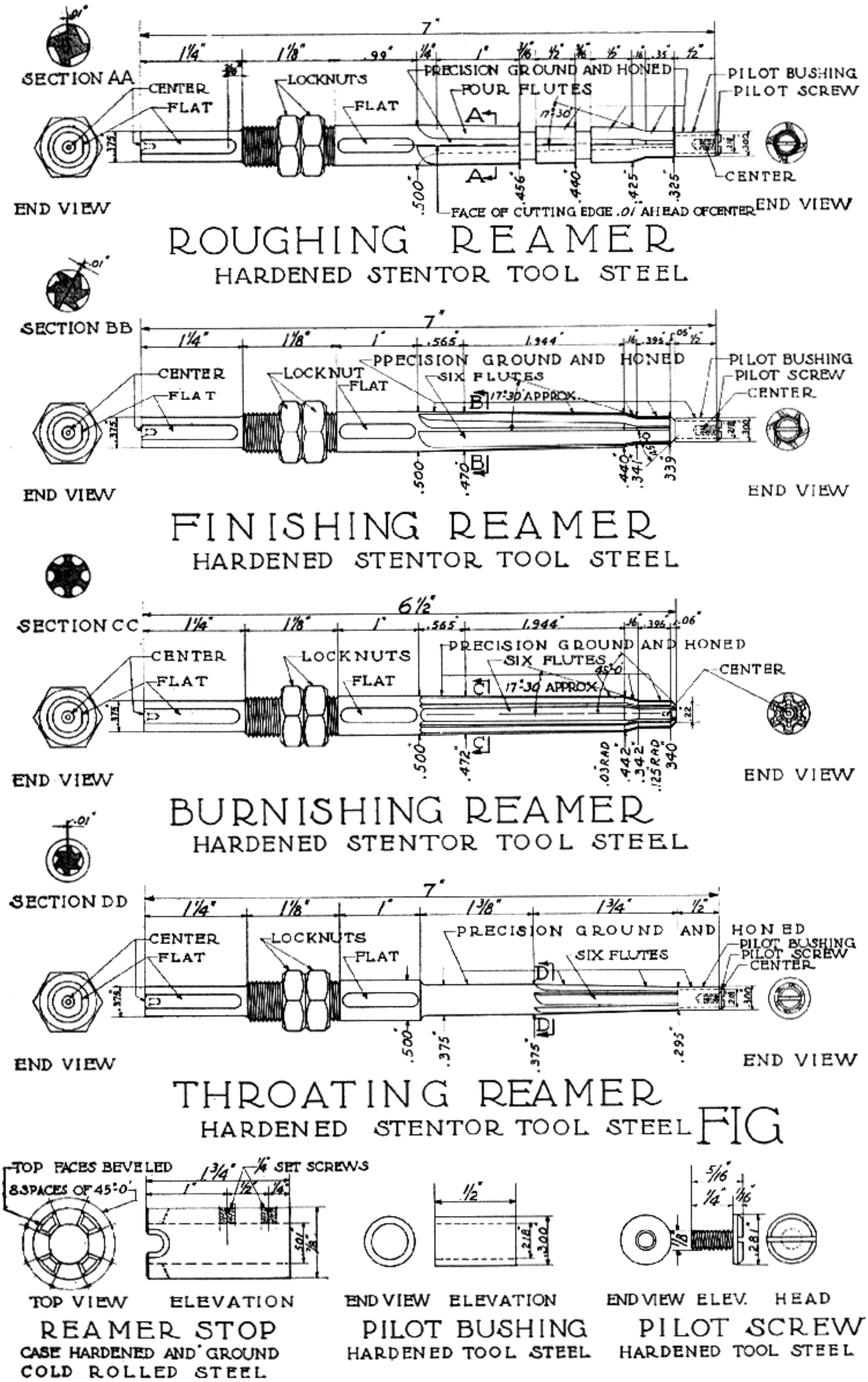

FIG

Fig. 56

Standard chambering reamers used in manufacturing caliber .30 Model 1903 Springfield rifle barrels. The same designs may be used for any other type of barrel-chambering reamers, by changing dimensions

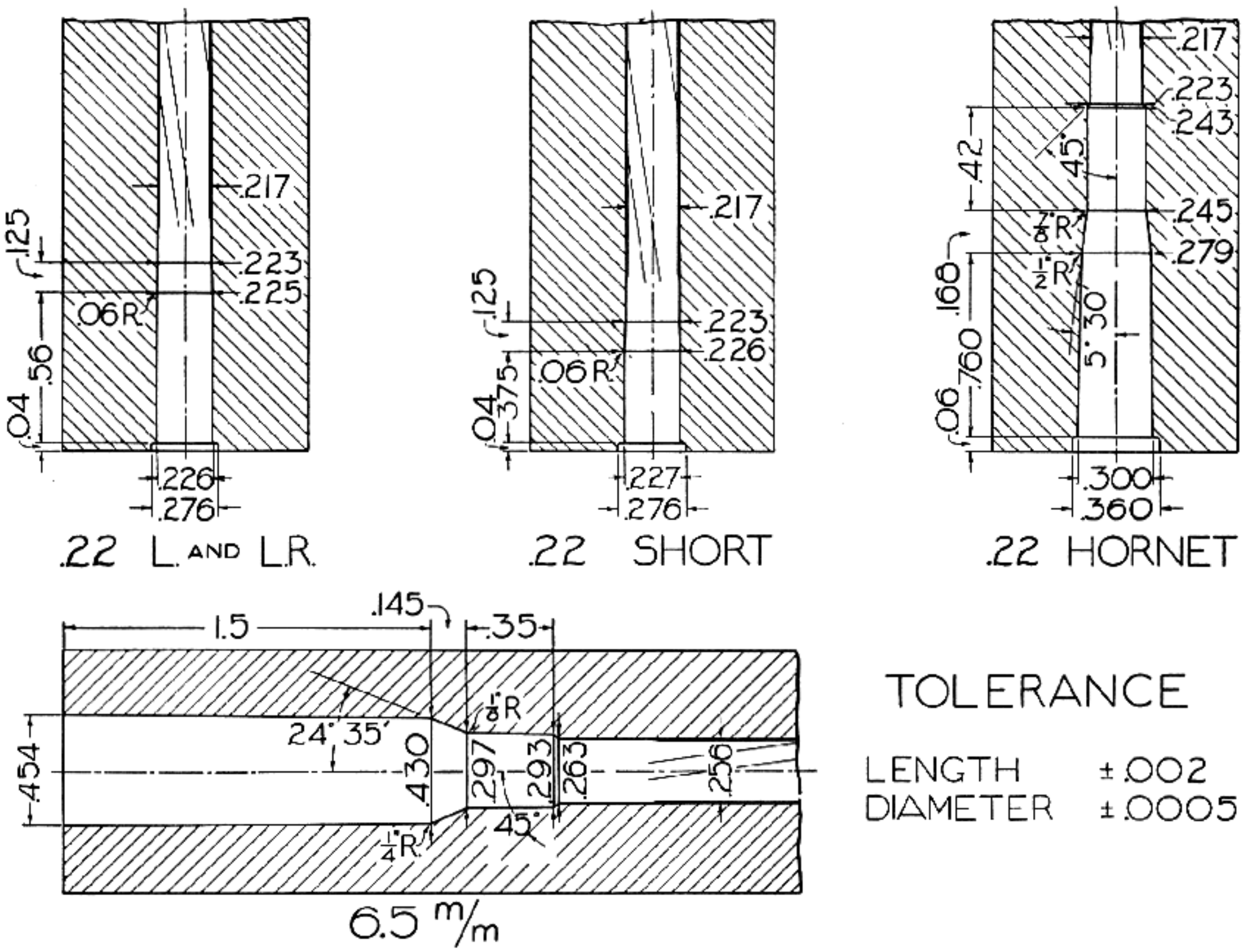

Fig. 57
Chamber sizes for the construction of chambering reamers

When making such a reamer, first turn the blank to the correct taper; then use a round nose tool and cut a series of grooves about 3/16 inch apart, 3/32 inch deep and about 3/32 inch wide. Having completed these, turn each one straight, just touching the cutting edge. These dimensions may have to be modified according to the size of the reamer. In this way a taper reamer has a gradual increase in diameter by steps, the same as the roughing chamber reamer. When using the second reamer, the tops of the serrated under-surface are easily removed. The step reamer as shown will answer for nearly all general purposes.

Chambering reamers constructed as shown in Figure 56 are of the best design, and this general outline of construction may be followed for any form of chamber. A careful study of these reamers, pilot bushings, stops, etc., will be self-explanatory; therefore, whatever caliber or cartridge is selected, only the new figures are required in their respective places.

Figures 57, 58, and 59 illustrate various chambers with the correct diameter to construct the reamers intended, and since all reamers for chamber work are made on the principles given in Figure 56 it will be simple to follow the general outlines of construction. Figure 58 illustrates the chamber dimensions for the caliber .30 model 1903 (Springfield) chamber. On the chamber diameter in Figures 57, 58, and 59 headspace has been left out, and the lengths given from the shoulder to the end of the chamber are for reamer sizes only. This end measurement together with the given length is for the purpose of measuring the reamer on the taper at this point, which gives the correct angle to grind it; therefore, the balance of the taper is free only to cut in space. For the purpose of correct headspace cartridges must be selected.

Unfortunately it is difficult to give a detailed drawing of all the standard cartridges used in connection with these chambers, for it would take up too much space; moreover, very few students would have any use for such a drawing. Future writings may make this possible.

It is possible in most instances to arrive at a very close approximation of the diameter of the

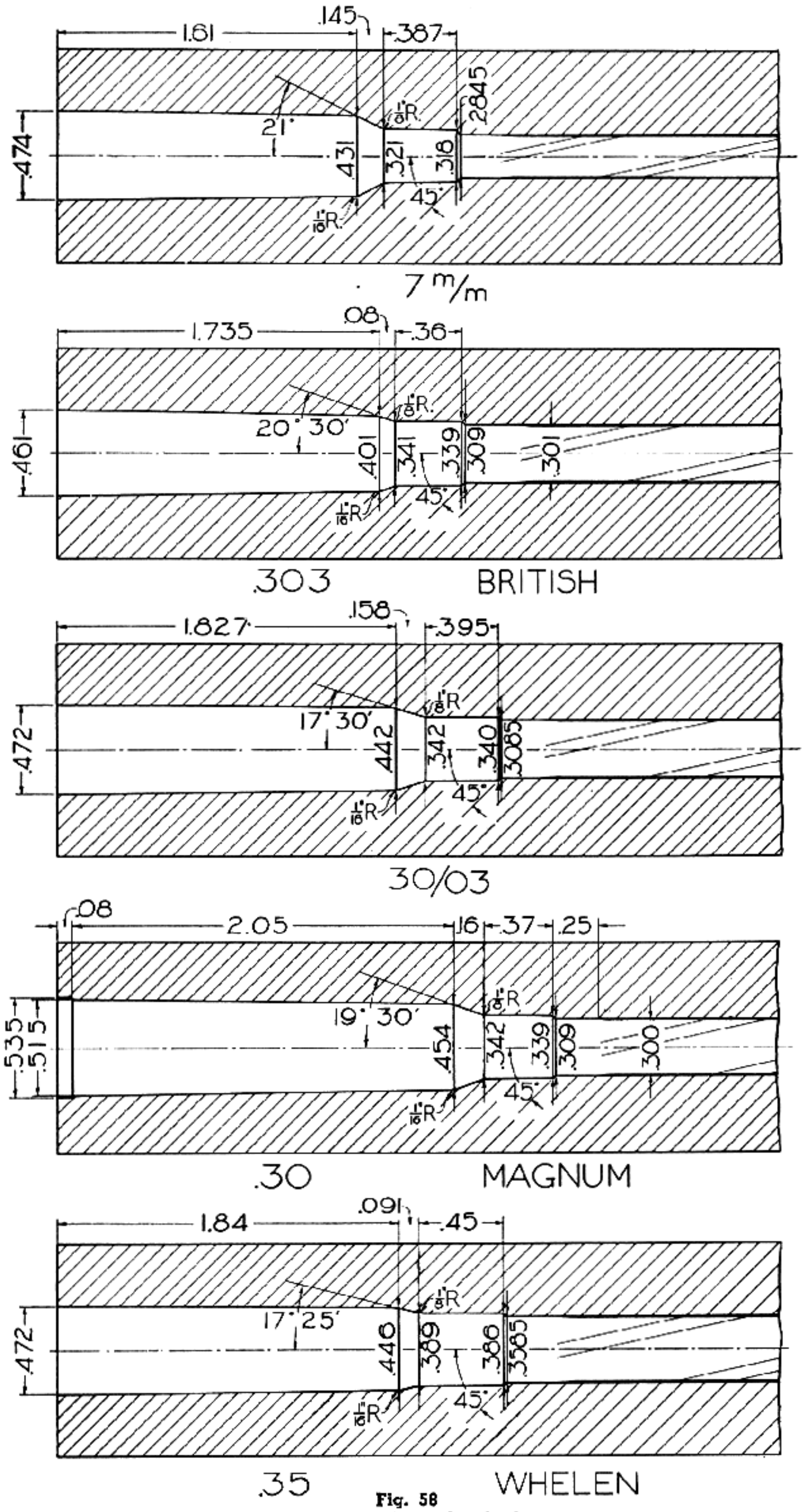

Fig. 58
Chamber sizes for making chambering reamers

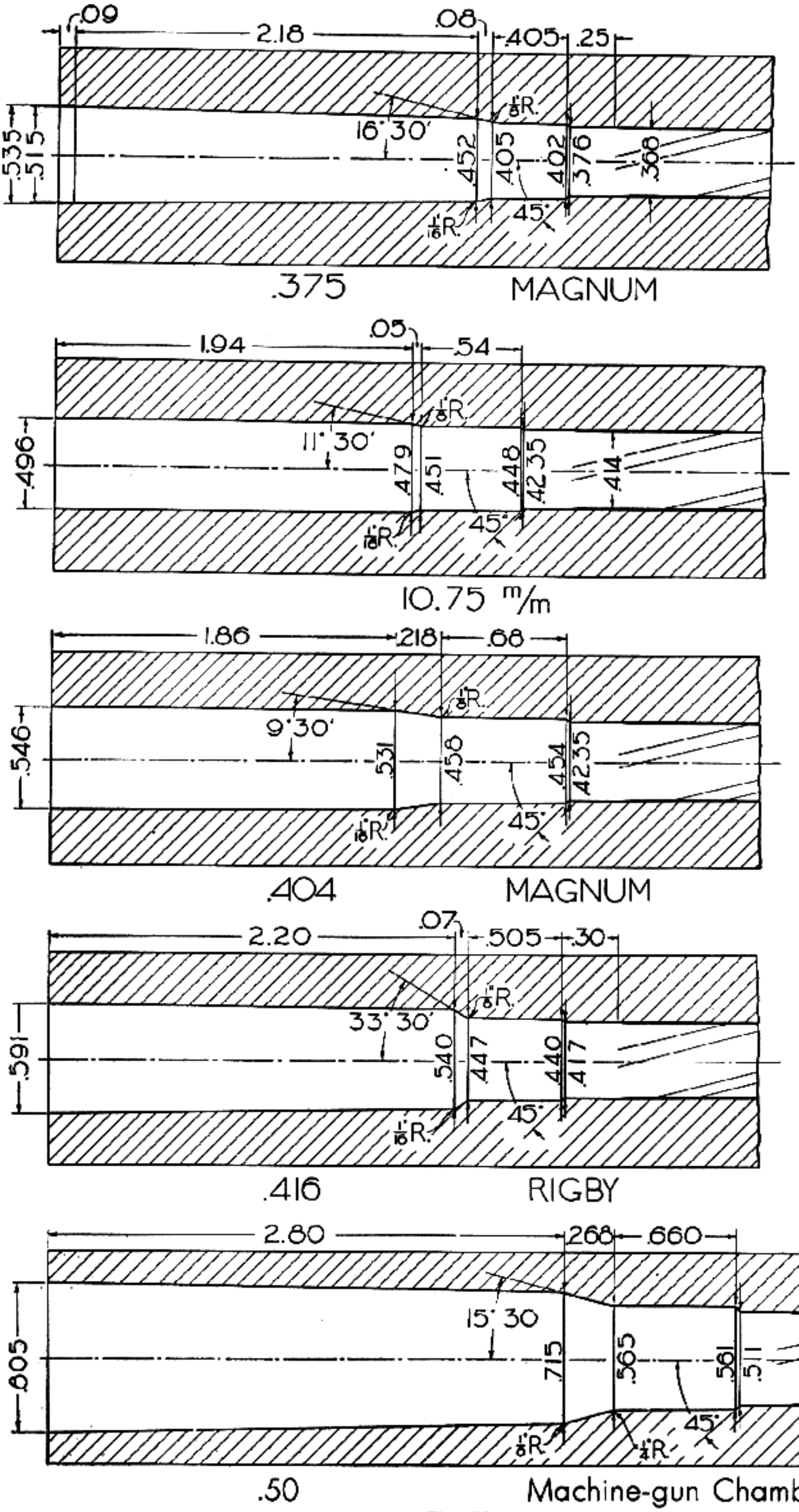

Fig. 59
Chamber sizes for making chambering reamers. Finishing reamers are made to these figures

maximum cartridge for the measurements of a number of standard cartridges of the different manufacturers. The mean of the measurements which may be taken as the average or mean cartridge should not be taken from cartridges of only one manufacturer, for these may differ from those of some other make very slightly. A chamber should be satisfactory for cartridges of all standard makes. When starting to design a set of chambering reamers, one should first obtain at least ten cartridges of all makes of that caliber, and the varieties loaded with different weight bullets. For comparison, using the figures given in Figure 60

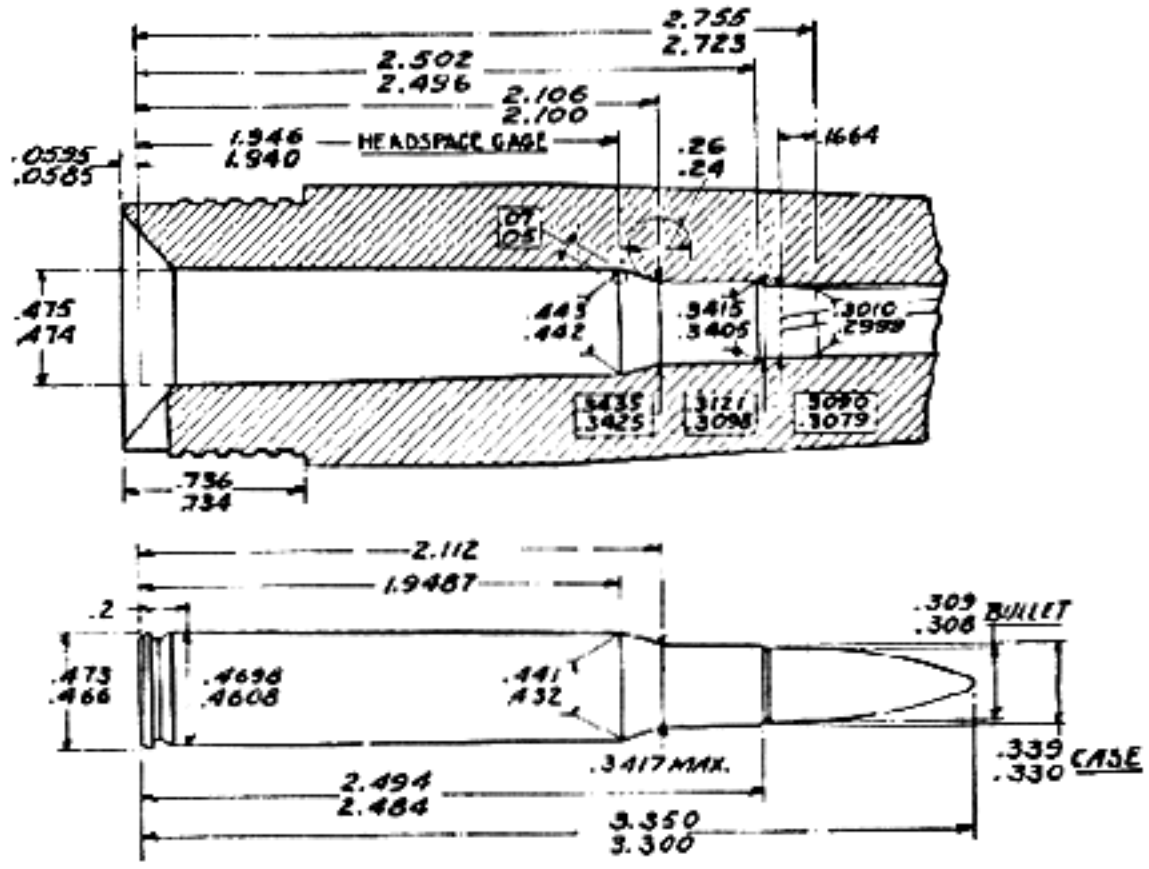

Fig. 60
Caliber .30 Model 1903 rifle chamber, and caliber .30 Model 1906 cartridge. Maximum and minimum dimensions for manufacture of case

select the same caliber of cartridge as for these chamber drawings, measure the sizes, and see just what tolerance has been left between a cartridge case and a chamber; such an allowance can often be carried out for any cartridge case not listed. If the chamber is to be reamed for some particular cartridge other than those listed, there should be the same tolerance between the maximum cartridge selected and the finished chamber reamer as there is between the maximum cartridge and the maximum chamber in these drawings. The finishing reamer should be made to cut the maximum chamber and kept well stoned with a fine Arkansas stone. This reamer will cut hundreds of barrels and if made correctly will last the careful gunsmith for years.

Most target shooters want barrels with tight chambers; that is, a chamber with a tight neck. At one time I had three different sets of reamers for the caliber .30 model 1903 chamber and could give a customer any chamber he wished, even to one on which it was necessary to turn the necks of the cartridges on a bench lathe to fit such a chamber. Tests were made from all three different chambers produced by these reamers with the rifles clamped in the machine rest, and it was found that the standard chamber as made in the Springfield rifle gave just as good results as these special chambers. Tight chambers are considered undesirable, tho they are fairly accurate when special bullet jackets can be selected that only have a variation of 0.001 inch from being concentric, and assembled in special accurate bullet dies made to the correct diameter for the special barrel. Chambers reamed with the relative diameters shown in the drawings are the most accurate and satisfactory chambers known. Nearly all American makers of rifle barrels are now designing their chambers for any new cartridges with tolerances between maximum cartridge and minimum chamber very closely approximating those shown here, and I cannot too firmly impress upon the student that he should follow these as a guide.

The cutters used for fluting reamers consist of two forms—the radius or convex, and the angular cutter. The convex cutter—used to cut roughing reamers and also burnishers—has a width equal to one-fifth to one-fourth the diameters of the reamers themselves. The depth of the flute should be from one-eighth to one-sixth of the diameter of the reamer. The width of the land of the cutting edges should be about one-fifth the distance from tooth to tooth. The most satisfactory method is by trial. An angular cutter is often preferred to a convex cutter for milling the flutes on the cylindrical portion of barrel reamers because of the form of tooth; therefore, an 80-degree angular cutter, slightly rounded at the point, may be used. Angular cutters for chambering reamers vary between 60 and 70 degrees with the ends and are given a slight radius or are slightly rounded to reinforce the bottom of the groove. Angular milling is usually done with an included angle between the teeth of 40, 50, 60, 70, and 80 degrees. Special ones which I made up consist of 60, 65, 70, 75, 80, and 85 degrees in both right and left hand. This offers a wide selection to choose from when making any form of reamer.

The chamber-burnishing reamer is one of the most difficult to make. This reamer has no pilot like the other reamers shown in Figure 56, as the greatest amount it removes is between 0.001 inch and 0.002 inch, and it is used after the No. 2 reamer. Instructions may be followed as given for the barrel-burnishing reamers, with the exception that it must be stoned completely because of the angle at the shoulder. The straight taper may be lapped to a certain extent, but better time is made with

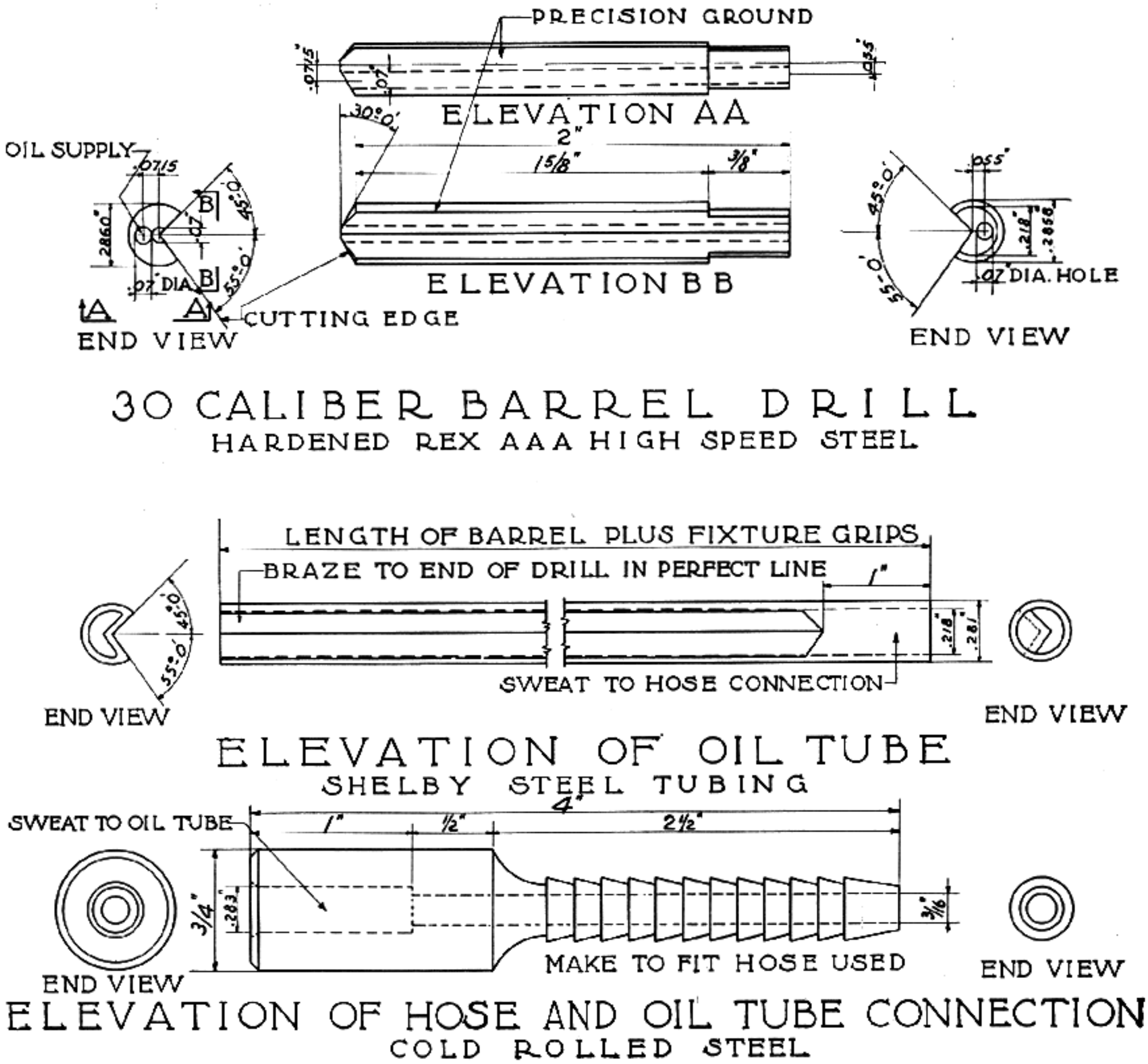

Fig. 61
Typical barrel drill and connections

a good oilstone after the cylindrical grinding takes place, allowing 0.002 inch oversize for the stoning operation to bring it to a flat sharp cutting edge.

Barrel Drills — Drills used to drill deep holes are designed very differently from the standard production drills which most mechanics use. The bits or drills constructed for barrel work are made short and brazed to the end of a grooved length of tubing. Figure 61 illustrates the drill and tubing, and Figure 62 illustrates the grooving-tool holder and tube fixture which is clamped to a planer bed. It is also necessary to make a form cutter using the figures shown in the design of the roller in order to mill a similar groove in the barrel drill. These drills are made of Rex AA or AAA high-speed steel and hardened with a very high temperature in order to keep their cutting edges as they pass through bars of alloy steel.

After the blanks are turned on a lathe, the small oil hole is drilled. The most practical and convenient place to drill these holes is on a set-up in the bench lathe, using a small angle plate with the drill clamped in a V; once the angle plate is set up for this operation a number may be drilled. The blanks are left long enough so that a center can be placed on one end and they can be ground in the bench lathe or a grinder having draw-in collets. A high-speed drill press may also be used to drill the oil holes by clamping the drill blanks in a V-block or an angle-plate having an accurate V in the center of it. After the oil holes are drilled

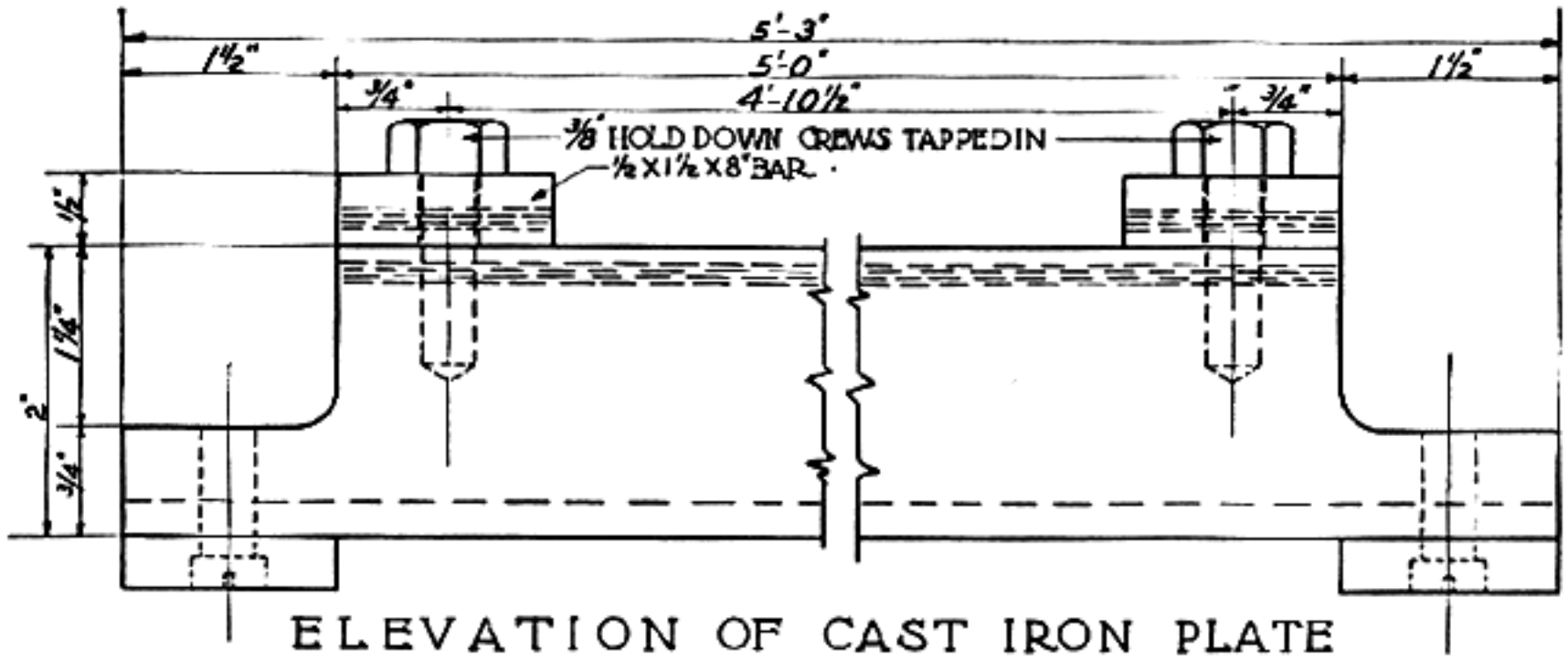

ELEVATION OF CAST IRON PLATE

OIL TUBE FIXTURE

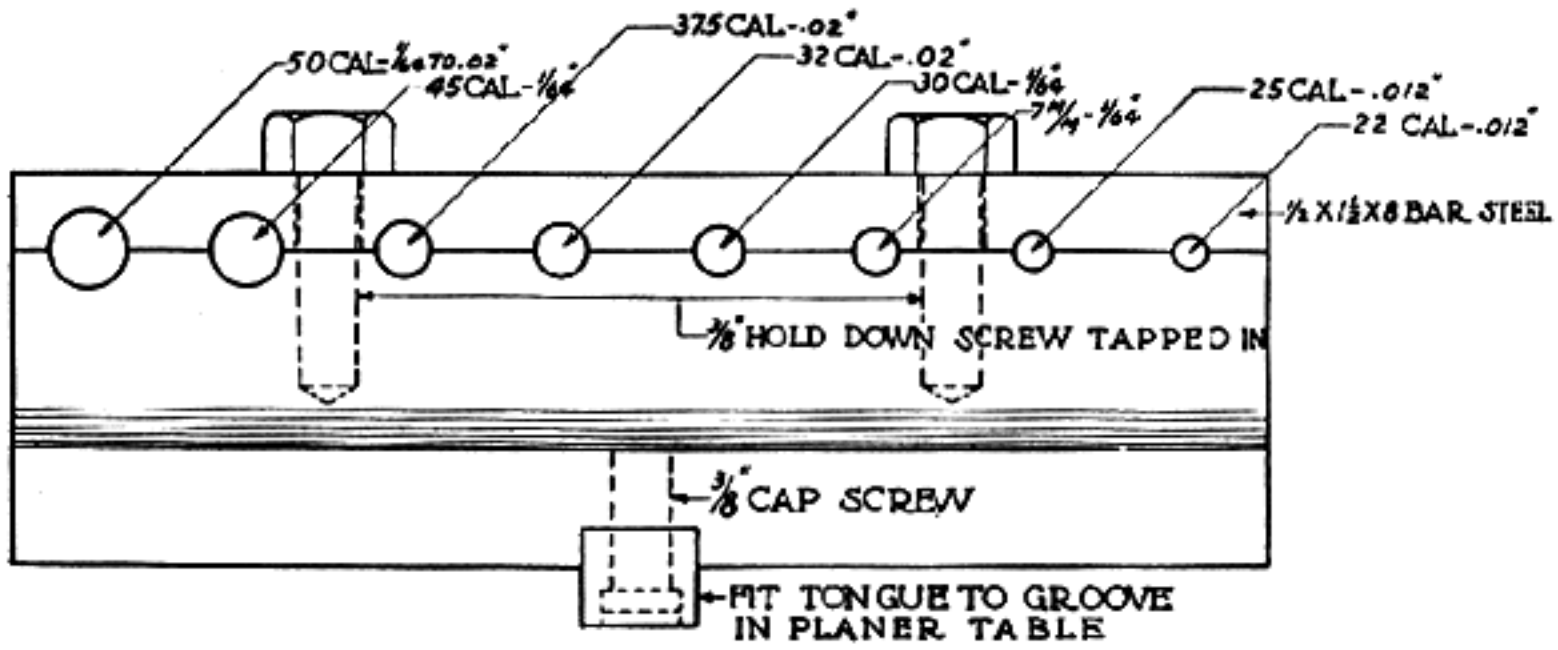

END VIEW OF CAST IRON PLATE

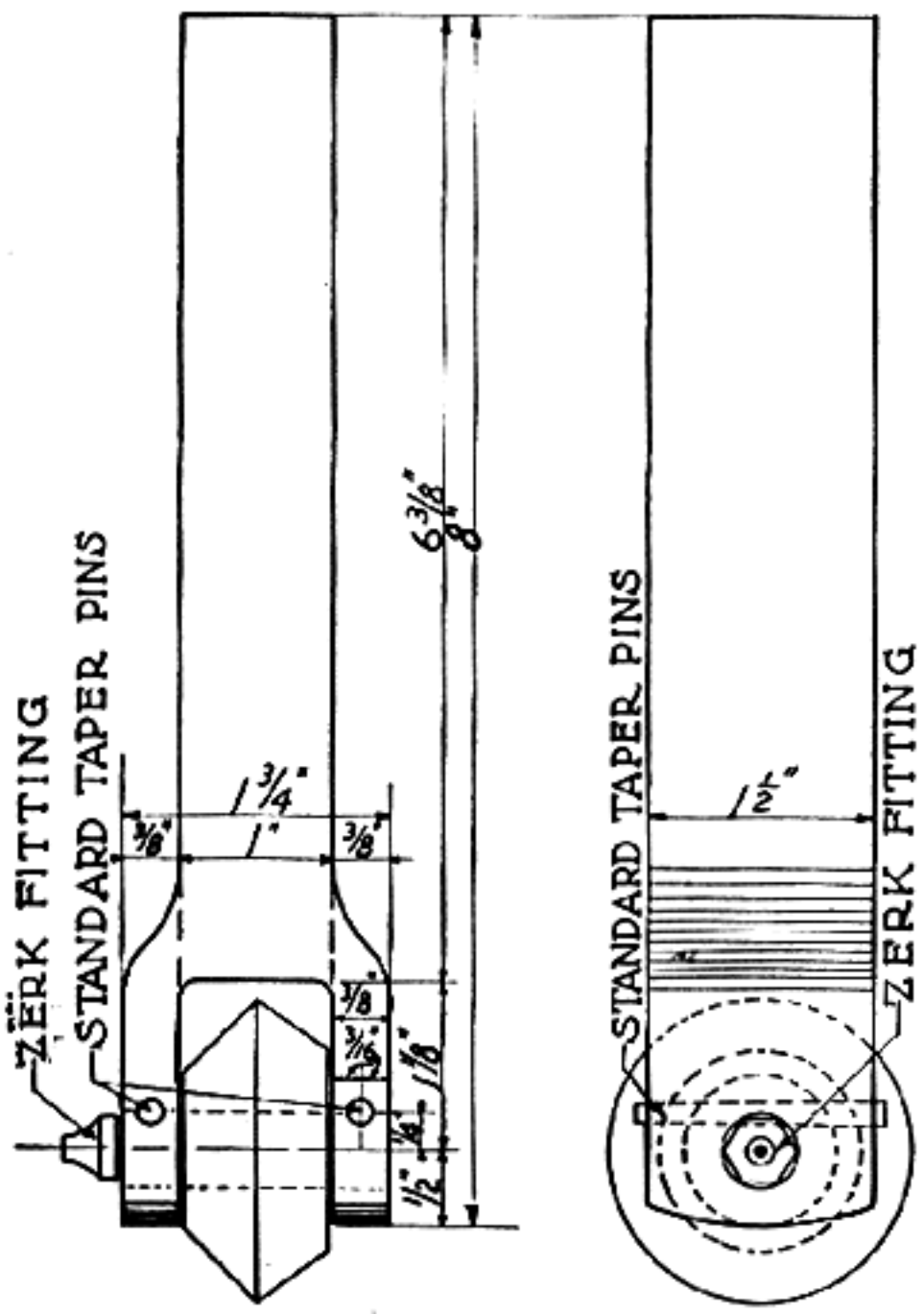

PLANER TOOL
FOR GROOVING OIL TUBE FOR BARREL DRILL
TOOL STEEL

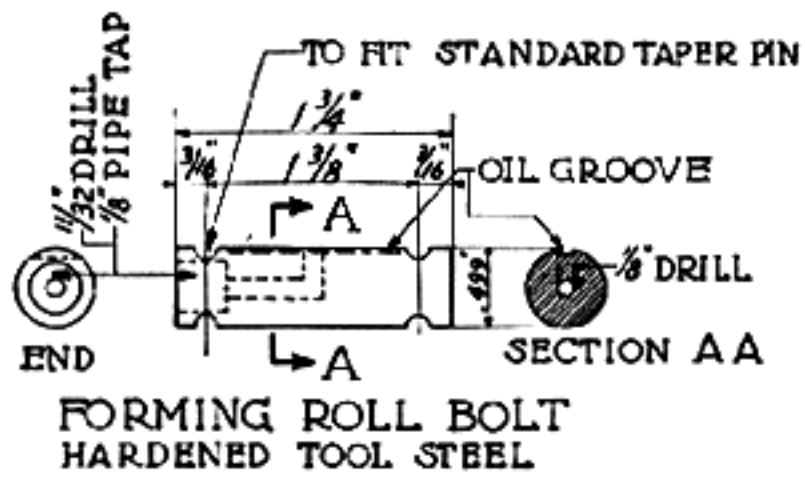

FORMING ROLL BOLT
HARDENED TOOL STEEL

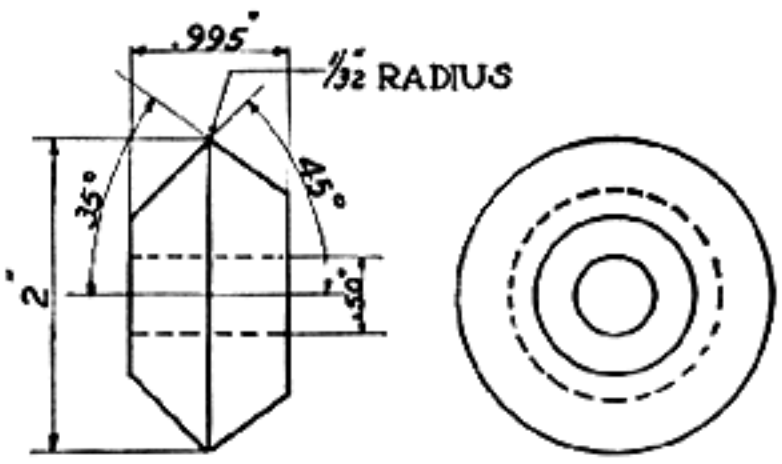

FORMING ROLL
HARDENED TOOL STEEL

Fig. 62
Tool and fixture used to form chip clearance in oil tubes. A planer is used for the operation

the blank is caught in the collet, a small center is drilled, and the blank is nicked on the same angle as the cutting edge, allowing enough web in the center for the following operations. When the blank is centered and nicked it is reversed, and the end is turned to a diameter which will conveniently fit the grooved oil tube. The blank is then milled for the chip clearance.

First, it will be necessary to make a drill holder which is only a piece of ¾ x 2 inch cold-drawn steel; the length is governed by that of the drill. A hole is accurately drilled and reamed close to one end of the steel to the size of the drilled blank. It is then split to a depth of 1¾ inch with a slitting saw; the width should be narrow, but it makes no material difference. While the drill holder is still in

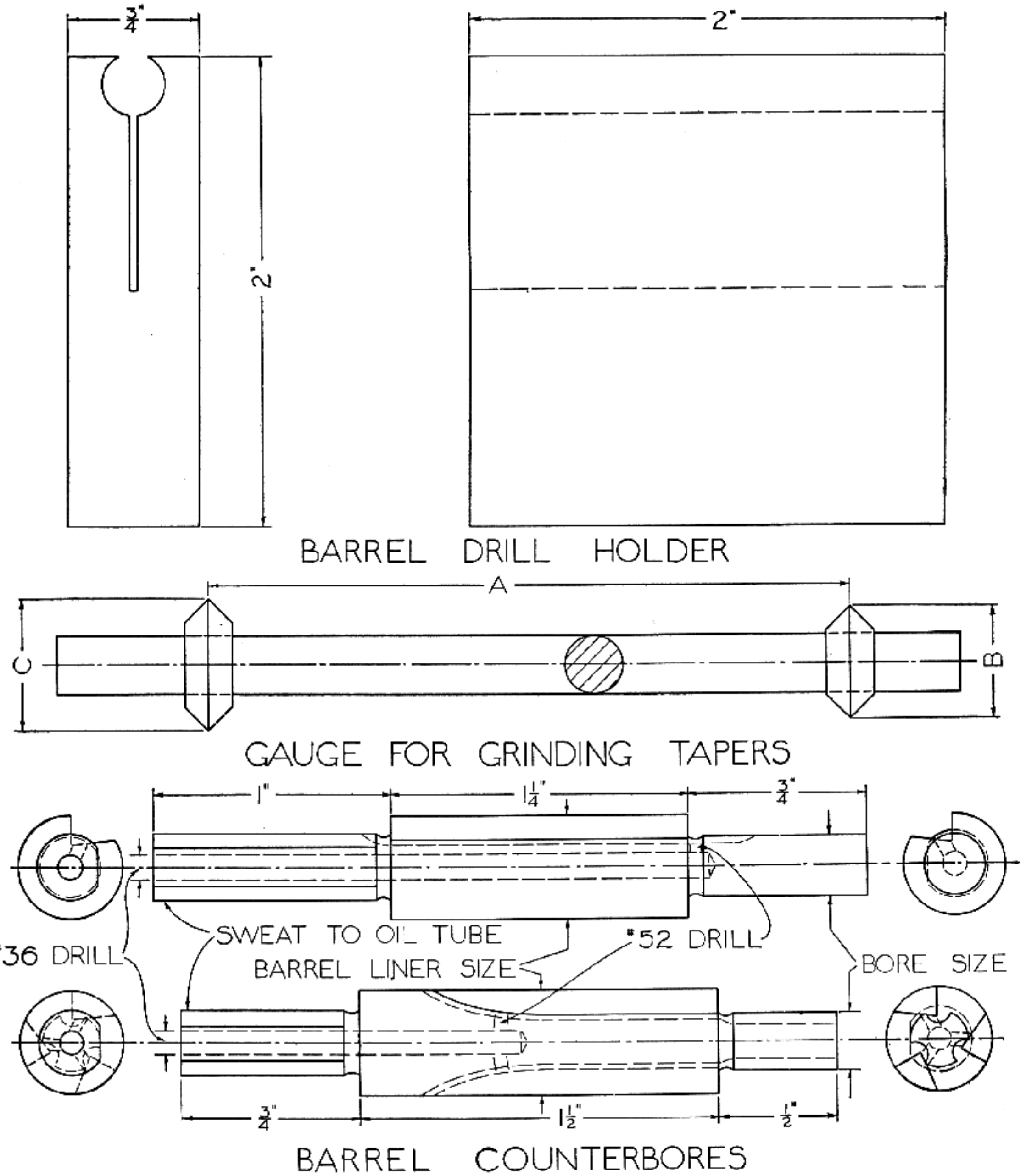

Fig. 63
Gun barrel accessories, such as barrel drill holder, taper grinding gauge, and barrel counterbores

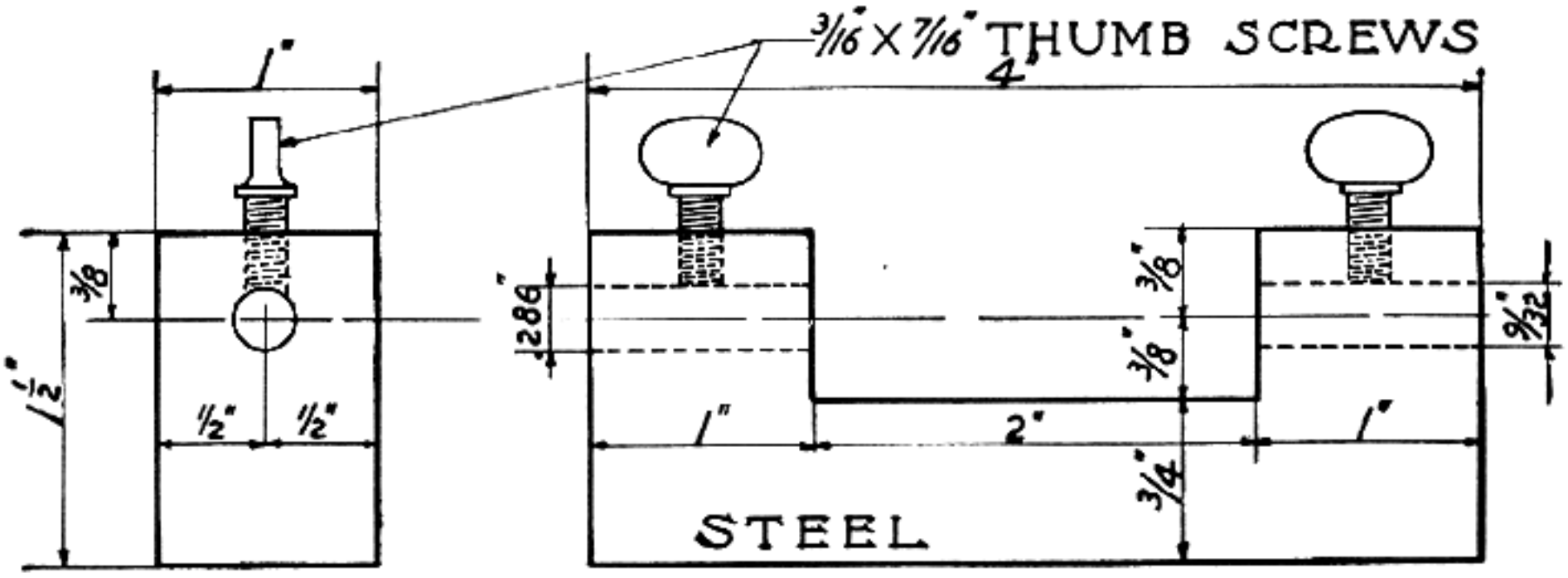

END VIEW ELEVATION

Fig. 64
Jig for brazing barrel drill to oil tube

the milling machine vise, the holder has the top milled off, exposing it to a depth of three-fourths of its diameter which is sufficient to hold the drill while the groove is being milled. Figure 63 shows this holder.

Having thus prepared the holder, the drill is set in place with the oil hole at the bottom and clamped in the milling-machine vise with only a fourth of the drill blank exposed. A piece of drill rod or any round steel bar is set against the holder, and the top of the vise clamps the blank solidly for the milling of the chip groove. The cutter should be placed as close to the center as possible and milled to a depth which will be just 0.002 inch above center after it is ground. The depth the groove is milled must be determined so that it will be correct after the drill is ground to size. After the drill is hardened and ground to size it is brazed into the end of the oil tube. Figure 64 illustrates a simple brazing fixture for this operation.

By clamping the drill close to the holder and only exposing the shank, there is no danger of annealing, for it is well protected from the flames of the brazing torch. At the same time the tube and drill can be held in perfect alinement. After they are completely brazed and cool, the surplus spelter is filed off and the drill and tube removed from the holder and finished. Below the drill also, the groove is cleaned of spelter and a drill carried through the oil hole to make positive that it is open for the flow of oil. The cutting edge is now ground and with an end connection sweated in place the drill is ready to drill a barrel blank.

Oil Tubing — The best oil tubing should be selected for drills, reamers, rifling heads and counterbores. Shelby tubing may be used in a number of instances, but the steel tubing made by Ellwood Ivins * is the best, for they make all their tubes of a high-carbon steel; therefore they have greater strength and resistance when placed under actual working conditions and twisting. Figure 61 illustrates an oil tube as it is grooved for the barrel drill, and Figure 62 shows the planer tool which performs this operation, together with the oil-tube plate to be fastened to the planer bed. It really is not necessary to make such a fixture if there is an old planer in the shop equipment, for grooves can be placed in the face of the bed for the intended caliber, and other grooves made when needed. The form roll is made and a suitable holder constructed as shown in Figure 62. The roll is made on the same angle as the groove in the drill, and when these are brazed together there is a straight channel for chips and oil return. A groove thus formed in an oil tube as on the drilling operation reinforces the tube as much as twenty-five per cent more than the plain round tube. A piece of cold-drawn tubing may be used successfully for this operation.

The oil tubing used for barrel reamers should be as heavy as possible, and also the tubes connecting the rifling head. Figure 61 illustrates the oil-tube connector made for both the .22 and .30 caliber rifling heads; connectors intended for other calibers are made on the same principle. When oil tubes are sweated on barrel counterbores they should be as heavy as possible to give the greatest strength, for when the surplus metal is removed from the interior of a .22-caliber barrel it requires a very rigid tube.

Reamers, rifling heads, and counterbores are sweated to the tubes together with the connections necessary for the flow of oil. The sweating of these must achieve a very good union, and the heat applied to the tubes, connections, and tools

* Ellwood Ivins Tube Works, Oak Lane Station, Philadelphia, Pa.

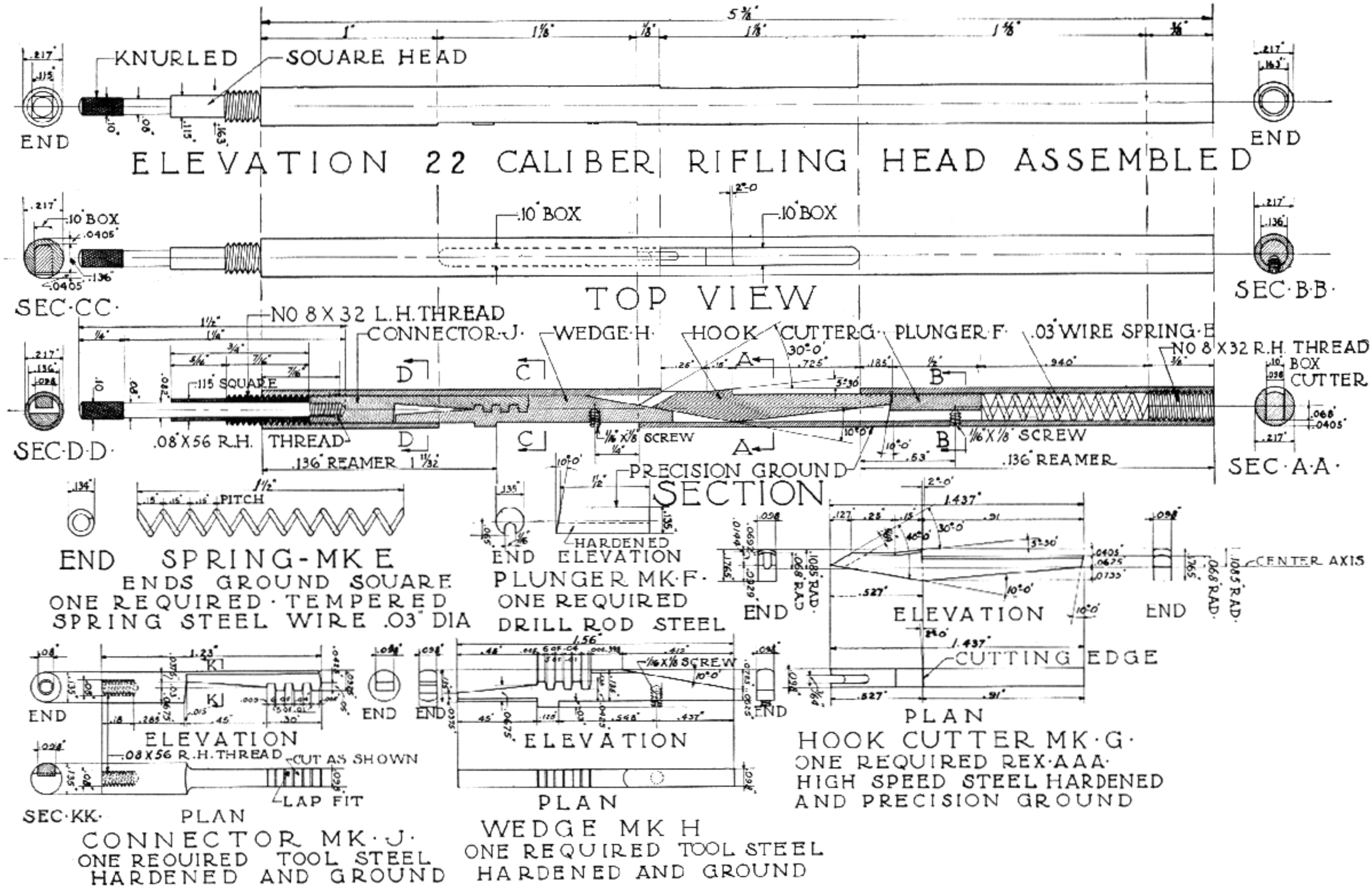

Fig. 65
Caliber .22 hook-cutter rifling head

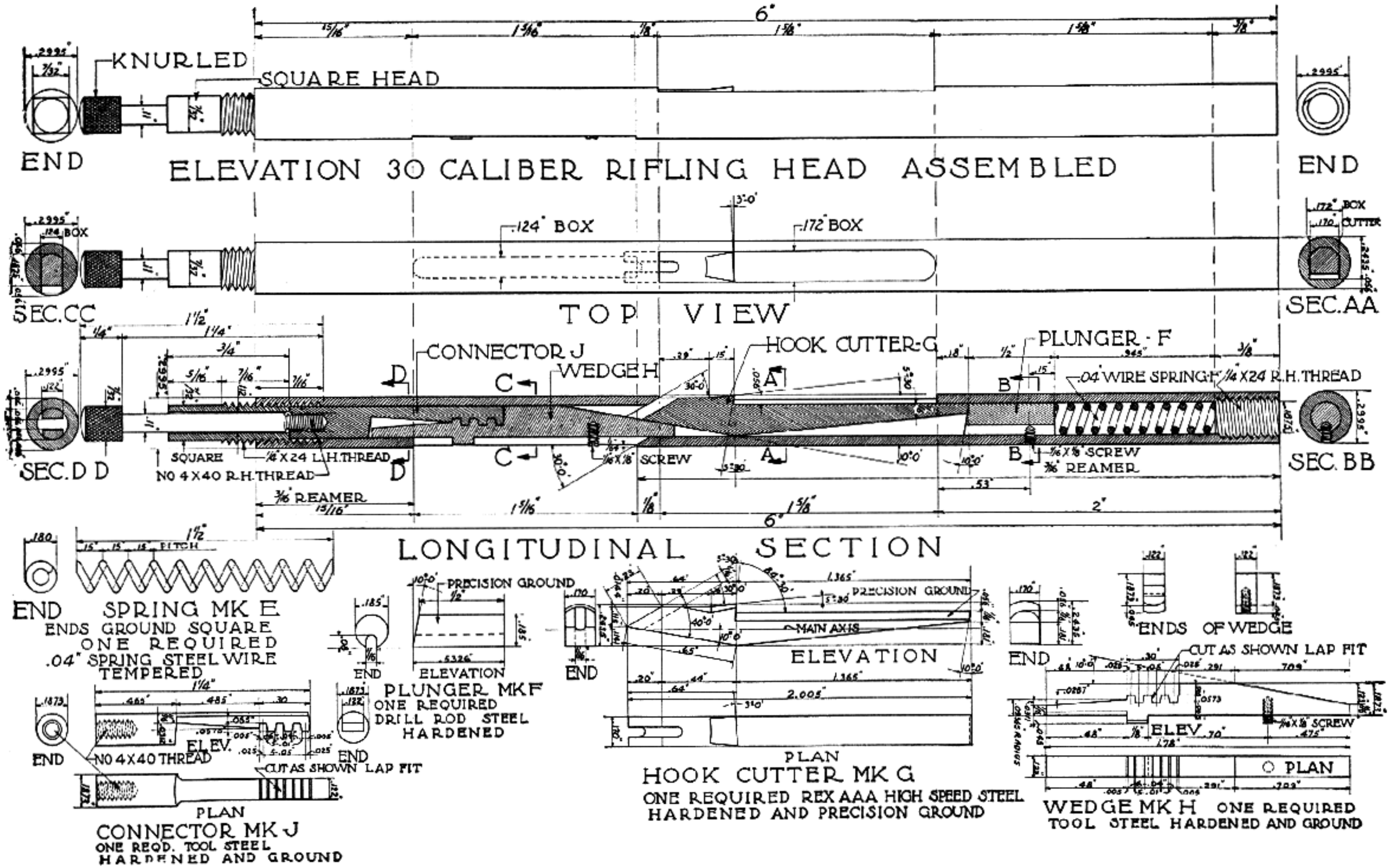

Fig. 66
Caliber .30 hook-cutter rifling head

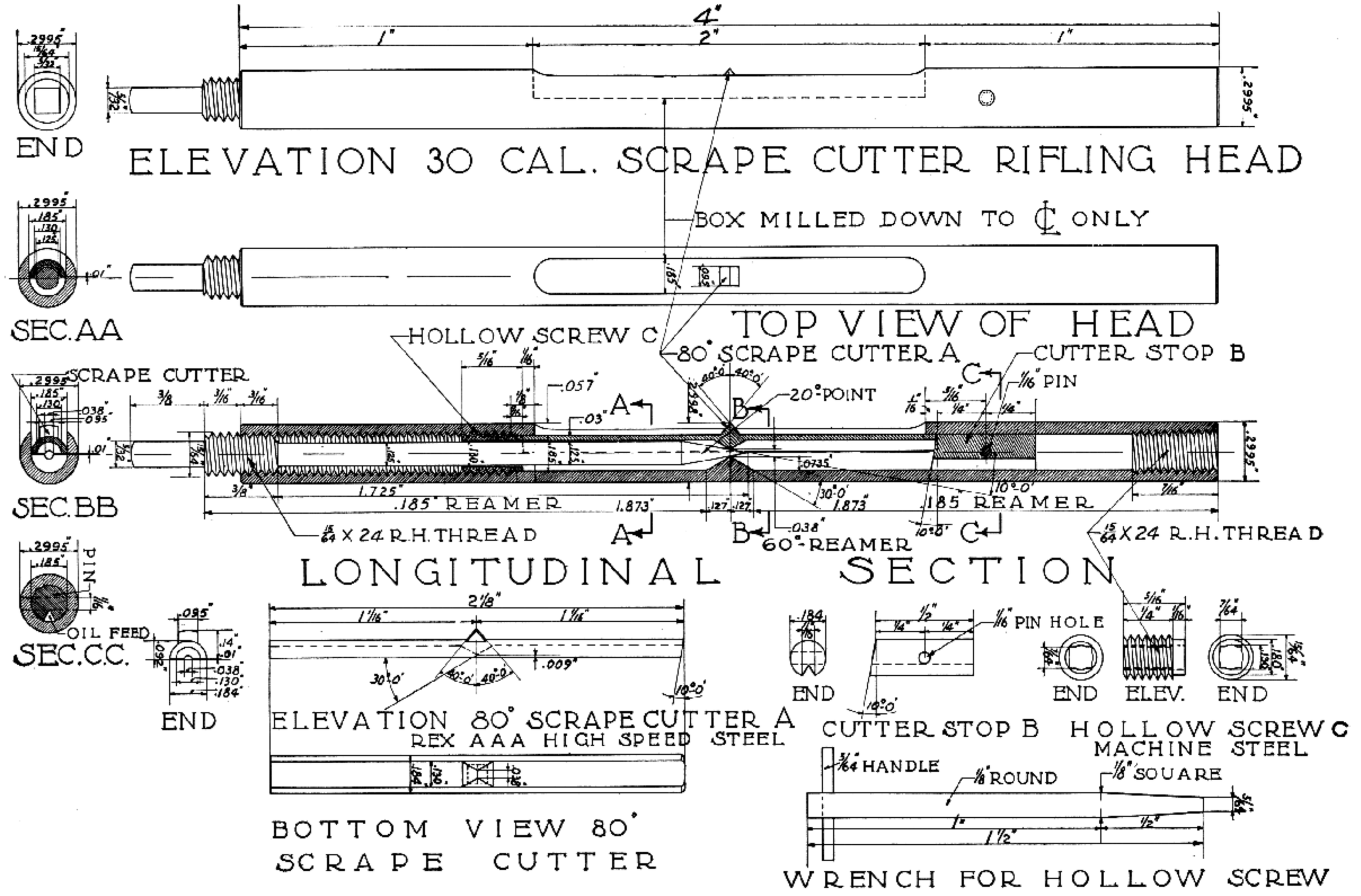

Fig. 67

Caliber .30 scrape-cutter rifling head. Better results are produced when the cutter is given a sharper angle

must only be high enough for the solder to run freely.

Rifling Heads — There are two forms of rifling heads: hook and scrape cutters. Figures 65, 66, and 67 illustrate one .22, one .30-caliber hook cutter, and one .30-caliber scrape-cutter head. The illustrations of the .22 and .30 caliber heads are similar except for the sizes; heads of this nature for any other caliber are made in proportion. A rifling head is one of the most difficult tools to make for barrel manufacture. The scrape-cutter head is the simplest, and for this reason I recommend it for the beginner to make and use. Some people think it is the best because a barrel made by this form of cutter produces the finest results in accuracy. This might be true if it were possible to use a diamond as the scraper. It is very difficult to hold the fine edge required on hard alloy steel barrels, but if a diamond were set in the holder a good many barrels could be cut with such a tool. A perfect groove would be produced, free from longitudinal grooves such as a steel cutter leaves. The use of diamonds in making barrels is a future possibility, for in this operation great accuracy and precision are the primary requirements. The diamond is the only material that would answer this purpose completely. A scrape cutter becomes worn rapidly and loses its shape to such an extent on hard steel that the results produced are inaccurate, which causes constant interruption of the operation to keep it stoned. It is a well-known fact that the diamond tool is indispensable for truing grinding wheels, and that diamond dust is commonly used for lapping or grinding small precision work in various tool rooms where great accuracy is required. Then why not in the rifling of a barrel? Some day an enterprising barrel maker will have all his rifling cutters made of diamonds, and his barrels will be known the world over.

As we study Figures 65 and 66—the .22 and .30 caliber rifling heads, which are hook-cutter heads—we see that the principle of adjustment is very simple. The cutter is in its released position, and as the head passes through the barrel, the wedge projection comes in contact with the release, moving the wedge *H* back. The tension on the spring *E* causes the cutter to be moved back by the plunger *F*. The cutter *G* has a 10-degree angle on the rear portion and a 30-degree angle which also corresponds to the same angle in the body of the head. As the adjustments take place for a new cut in the groove, the adjusting screw is given a slight turn corresponding to a scraping cut of 0.0001 inch or slightly more, and the connector *J* is moved forward carrying the wedge *H*. The cutter *G* is moved higher on the angle of the wedge and causes the former to remove the desired amount of metal from the groove. Only the one setting is required until all grooves are cut and another adjustment takes place, but upon its re-

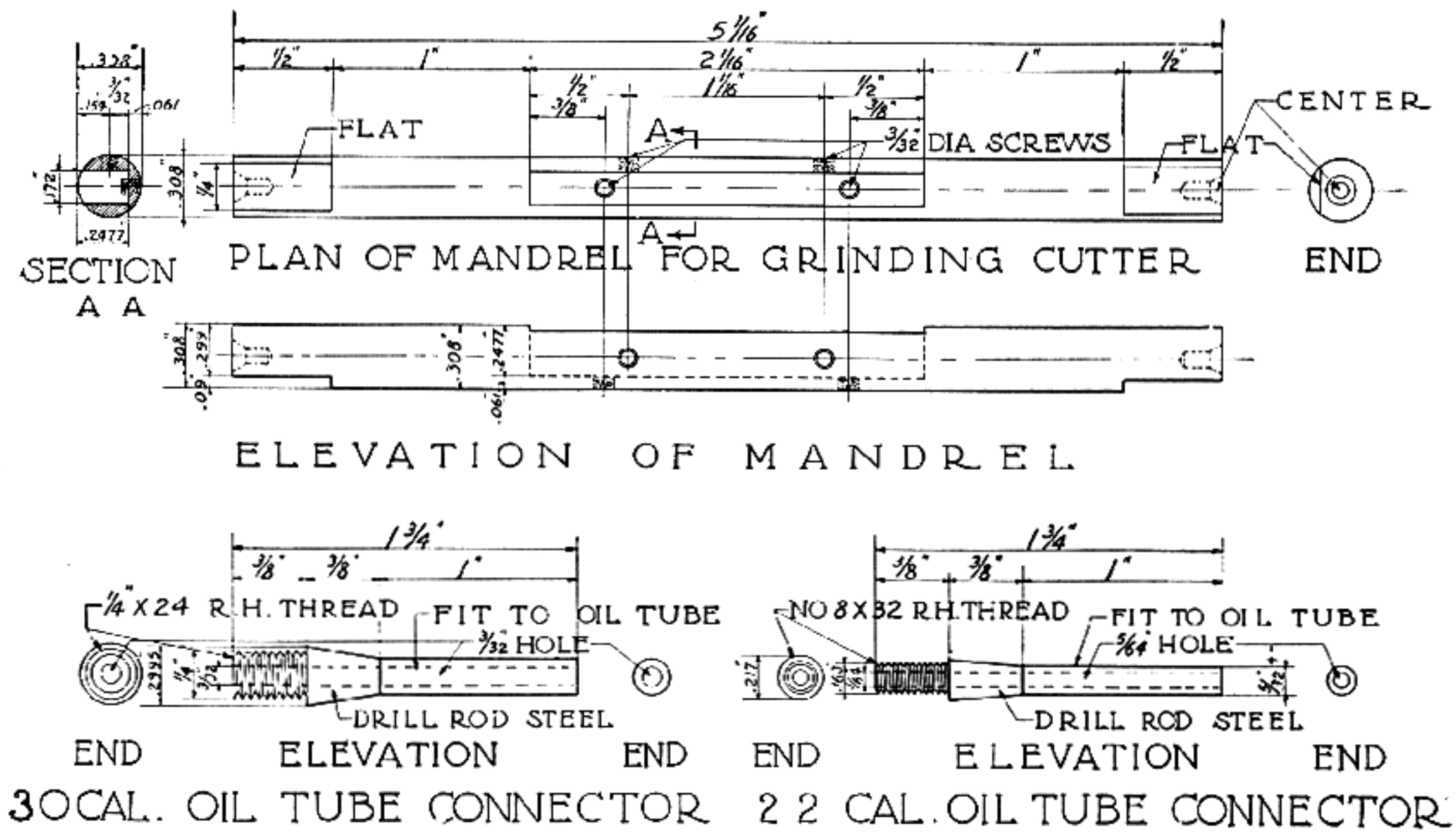

Fig. 68
Rifling-head oil-tube connection and mandrel for grinding rifling cutter

turn through the barrel it is released so that the cutter does not come in contact with the metal to dull the cutting edge. A constant supply of oil is coming through the groove in the plunger *F* and flowing around the cutter from the box. The oil-tube connectors shown in Figure 68 screw into the forward end, compressing the spring *E*. It will be noticed that the adjusting end of the head has a left-hand screw, whereas the oil-tube connector end has a right thread. It is well to sweat the latter in place after a head is adjusted and working properly.

In the plan view of the cutter it will be noticed that a groove is cut in the rear portion. This is used to insert a hook to remove the cutter whenever it needs stoning or sharpening. There is shown in Figure 68 an arbor for grinding the radius on a hook cutter to the exact diameter of a maximum groove in the barrel. This arbor is required for each caliber of barrel made; therefore, one of these is also necessary, as well as the rifling head itself.

The drawings of these rifling heads are as complete as it is possible to make them; still there are points and a number of figures which must be made by the person who attempts them. When making the rifling head it is best to make three, especially for the .22-caliber size; one may be lost or even two in the hardening. On the larger sizes it is advisable to make two, and if an accident should happen there is always the extra body to fall back on.

A difficult part to complete is the 30-degree angle between the cutter and the wedge box; this must be filed in as it is impossible to work any form of cutter in the small opening between these two boxes. The milling of the cutter and wedge requires a high-speed vertical-head attachment to the milling machine and very fine cuts must be taken. Since these two boxes are opposite each other, the body is held in the dividing head chuck, and after one box is finished the head is turned 180 degrees and the other box is milled.

The making of the wedge and connector requires the closest of precision work, for these two must fit together without any lost motion between the teeth; also, the length must check between the cutter, wedge, and connector. The $\frac{1}{16}$ x $\frac{1}{8}$ inch screw which is placed on the forward end of the wedge is for the purpose of removing the wedge from the box; otherwise it would be difficult to lift it out.

The tapping of both ends of the head must be done with care to have them perfectly concentric and also to be the full depth of thread. All parts of a .22-caliber head are rather small, so more care should be used in their construction. The most satisfactory steels found to make the body are either Stentor oil-hardening steel or Sanderson high-carbon tool steel. Both must be given annealing treatments or normalized after the blank is roughed out to remove all strains from the steel before the hardening operation takes place. If these annealing treatments are not given the steel the heads usually run out in the center, which is the weakest part of the body.

The construction of the standard scrape-cutter head shown in Figure 67 will be self-explanatory to the experienced tool maker, as it is one of the most simple forms of head to make. The cutter itself is worked up from the center by a wedge effect made possible by the adjusting screw with a long tapered pointed rod acting between the cutter and a projection left in the center of the head with a similar projection on the cutter *A*; therefore the cutting effect is relied upon by the spring or give of the cutter itself with the adjustment in the center of the tool. This cutter works in both directions through the barrel, or cuts in both directions of its stroke.

Figure 83 illustrates an angle on the cutter which should be made as shown. The drawing illustrates a straight cutter, the easiest to make, but if this is set off at an angle of 20 or 30 degrees to the cutting edge better results are made possible. When constructing one of these cutters it is well to change from the straight cutter to the angle cutter mentioned. The cutter only requires a gradual adjustment of the screw in order to move it up against the walls of the bore after it begins to form its grooves. The depth is only a matter of a number of passes through the barrel, actually being only 0.004 inch. The spring of the cutter caused by the wedge adjustment is practically nil. The same instructions may be followed as given for the hook-cutter rifling head, but because of the simplicity in the construction of this head I will presume that the reader has the required mechanical knowledge to complete either head without much effort, provided he has the proper machine tools at his disposal. Without these it will be found very difficult to have the accuracy and precision necessary to complete them as they should be. There is always one point to be remembered when finishing the cutter and that is to have a flat portion of about 0.001 inch on the top of the cutter. This advice applies to the burnishing reamers as well.

Figures 69 and 70 illustrate a new design in rifling heads; one is for a .22 caliber and one for a caliber .30. These heads are made on the scrape-cutter or burnishing principle, except that the full

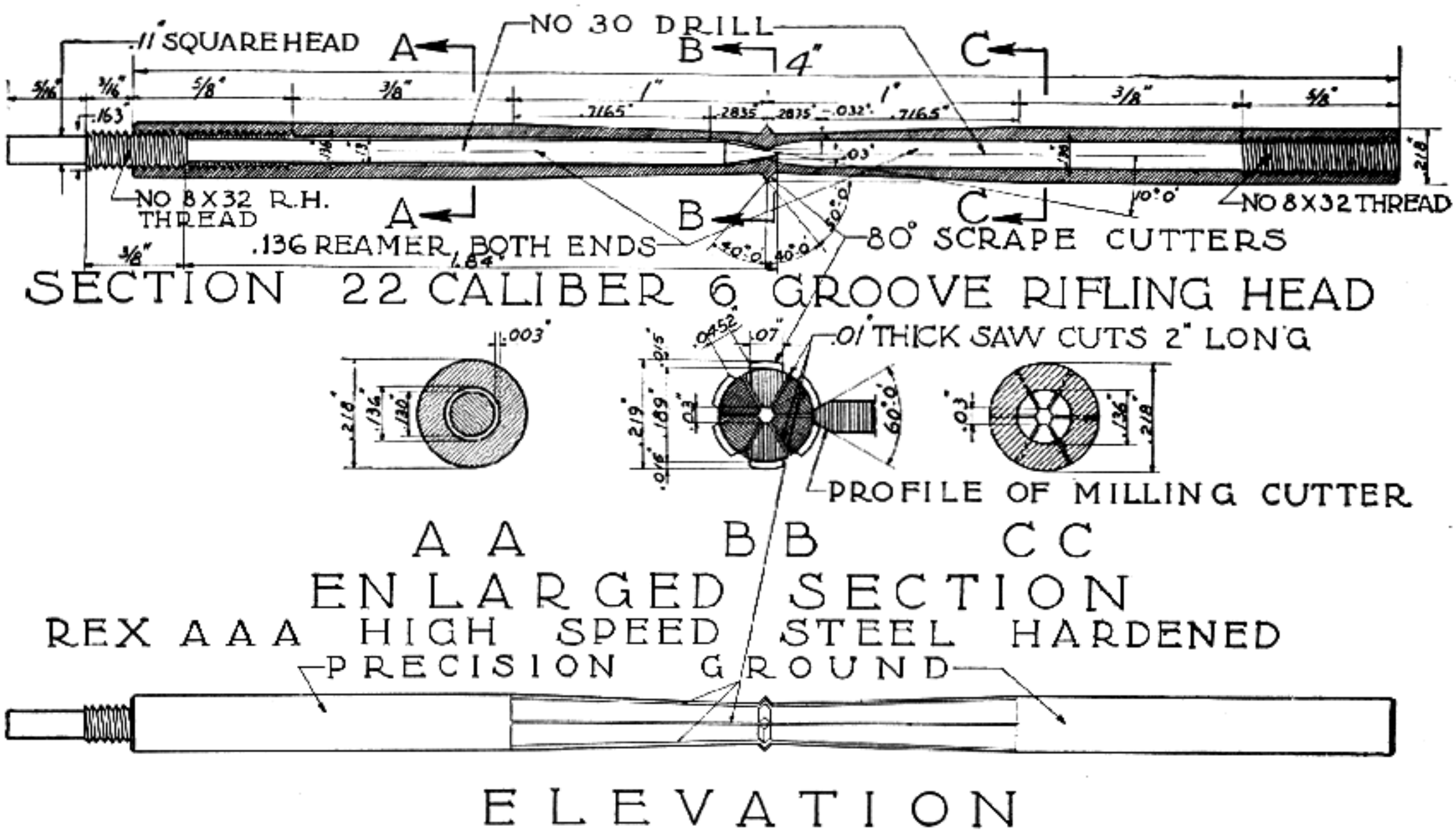

Fig. 69
Design suggestion for six-groove caliber .22 scrape-cutter rifling head. Any caliber may be made on these principles

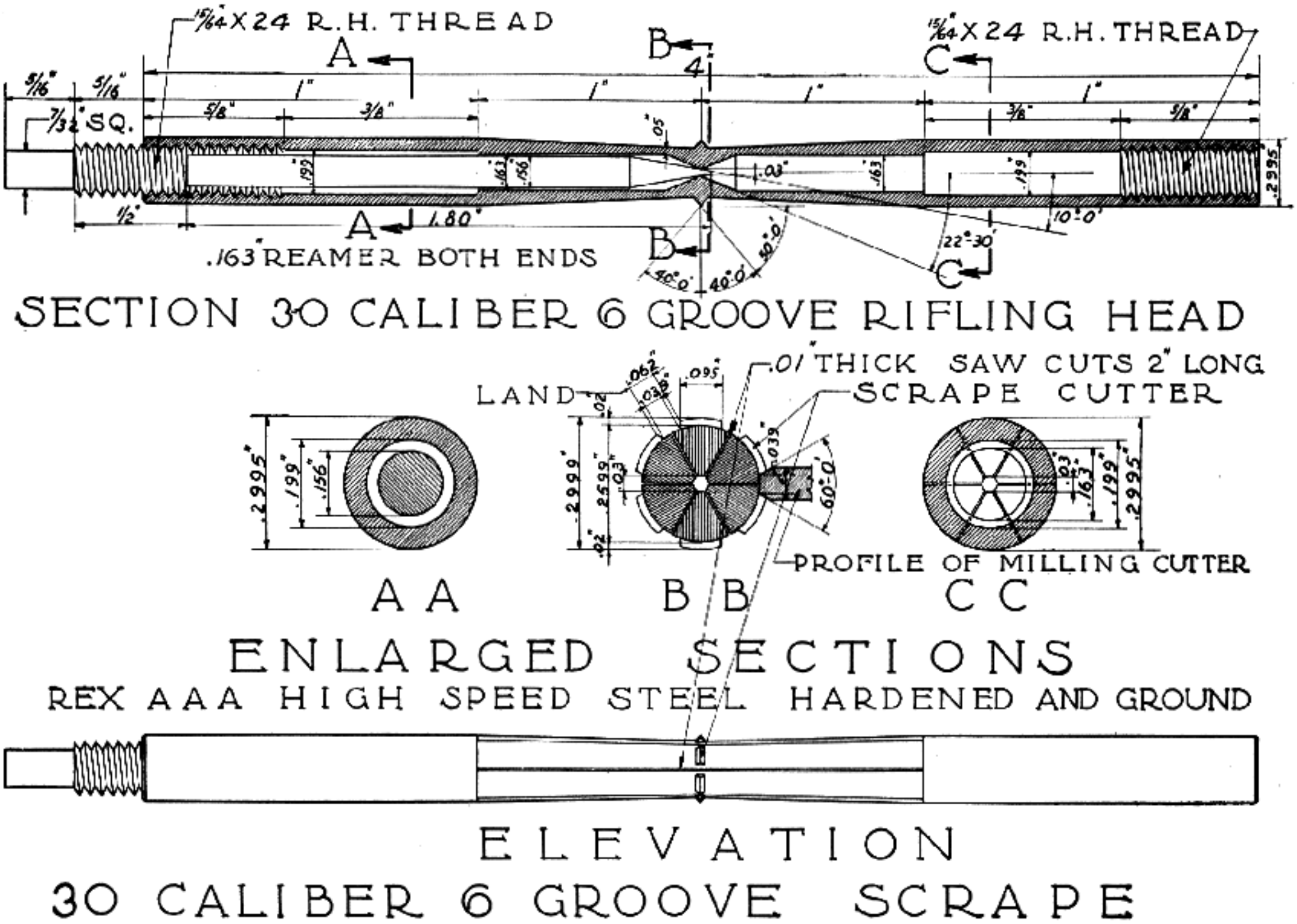

Fig. 70
Design suggestion for six-groove caliber .30 scrape-cutter rifling head for cleaning out rifling

number of grooves are cut without moving the index head either on the milling or rifling machine. Simplicity is the keynote of these heads and it is possible for the average mechanic to make these providing he has the equipment. I have never used them in the construction of a rifle barrel, but because of the demand for a cheaper tool this was designed. The real difficulty will be found in the hardening, as a high-speed steel is used; but since most large cities have heat-treating shops there will be no trouble, nor will there be any in the small shop, providing the equipment is such that it can be done there. This tool may also be used to clean a barrel that has been neglected—by fastening it in the lapping head as shown in Figure 85.

Gauges — While any tool or instrument used for securing or taking measurements may properly be called a gauge, this term, when used by tool or gauge makers, is usually understood to mean tools which conform to fixed dimensions and are used for testing sizes but are not provided with graduated adjustable numbers for measuring various lengths or angles. There are exceptions, however, to this general classification; measuring instruments, such as the micrometer and vernier caliper, are indispensable because they can be used for determining actual dimensions, and being adjustable, cover quite a range of sizes. Any form of adjustable measuring tool, however, has certain disadvantages for such work as testing the sizes of duplicate working parts, especially when such tests must be made repeatedly, and then solid or fixed gauges are commonly used. There is less chance of inaccuracy with a fixed gauge, and it is more convenient to use than a tool which must be adjusted; but, owing to the necessity of having one gauge for each variation in size, and because of the cost of a set of buttons covering a wide range of sizes, the simple type of gauge is usually selected. There are two separate gauges made for a maximum or minimum length for testing head space in a rifle chamber. The button type of gauge will cost almost twice as much as the micrometer gauge, but it is positive and can stand a great amount of pressure, whereas the micrometer standard must be used with great care in order not to strain the threads with undue pressure upon the camming action of the bolts.

Construction of the gauges shown in Figure 71 requires practically all of the measuring instruments used by tool and gauge makers. They may be divided into two general classes: the tools for measurement of length and those for the measurement of tapers or angles. In these two general classes of instruments for length and angular measurements, there are many different types and designs. For instance, there is the adjustable type which is graduated and used for taking direct measurements in inches or degrees; then there is another type which is fixed and cannot be used for determining various sizes of angles, but simply for gauging or testing one particular size. There are also tools for taking approximate measurements and others designed for very accurate or precise measurements.

The instruments necessary for the construction of accurate gauges for barrel and other work pertaining to rifles are: the vernier caliper, such as the height and depth gauge, and the caliper micrometer, bevel protractor, sine bar, indicator, etc. With these it is possible to make tools and gauges calling for fine precision measurements given in these drawings. In the construction of gauges, it is a well-known fact that hardened pieces of steel will undergo minute but measureable changes in form during a long period of time after the hardening has taken place. These changes are due to the internal stresses produced by the hardening process which are slowly and gradually relieved. To eliminate slight inaccuracies which might result from these changes, steel used for gauges and other barrel tools requiring a high degree of accuracy is allowed to season before being finally ground and lapped to the finished dimensions. To relieve the stresses and overcome the long delay of storage seasoning, the hardened tools and gauges are heated in oil at a temperature of about 325 degrees Fahrenheit for a period of ten hours; thus the internal stresses which cause the changes are practically eliminated. Of course, you can use the old method known as the hot and cold water bath. The steel so treated is rough-ground quite close to the finished size and is then immersed in a bath of boiling water, which causes the gauge or tool to expand; then it is dipped in a bath of ice-water. The repeated expansion and contraction cause the molecules to settle into a permanent form.

A number of various gauges for the chamber of a rifle are also necessary if many barrels are to be produced. Figure 72 shows a complete set of chamber gauges made for the .30-06 chamber. I do not want to give the reader an impression that he must make a set of gauges for all chambers; on the contrary, if you have the proper confidence in your own ability to make correct measurements it is not necessary to construct so elaborate a set of gauges for one or two barrels, or even a dozen; but it is possible to make a few temporary gauges of soft steel to check measurements that you may be in doubt about. Plug gauges are necessary to

RIMLESS CASE

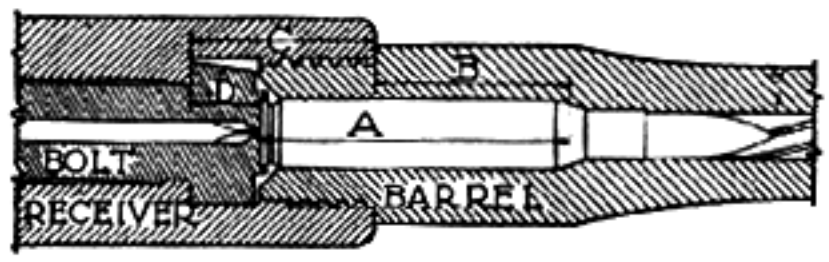

HEAD SPACE MEASUREMENTS

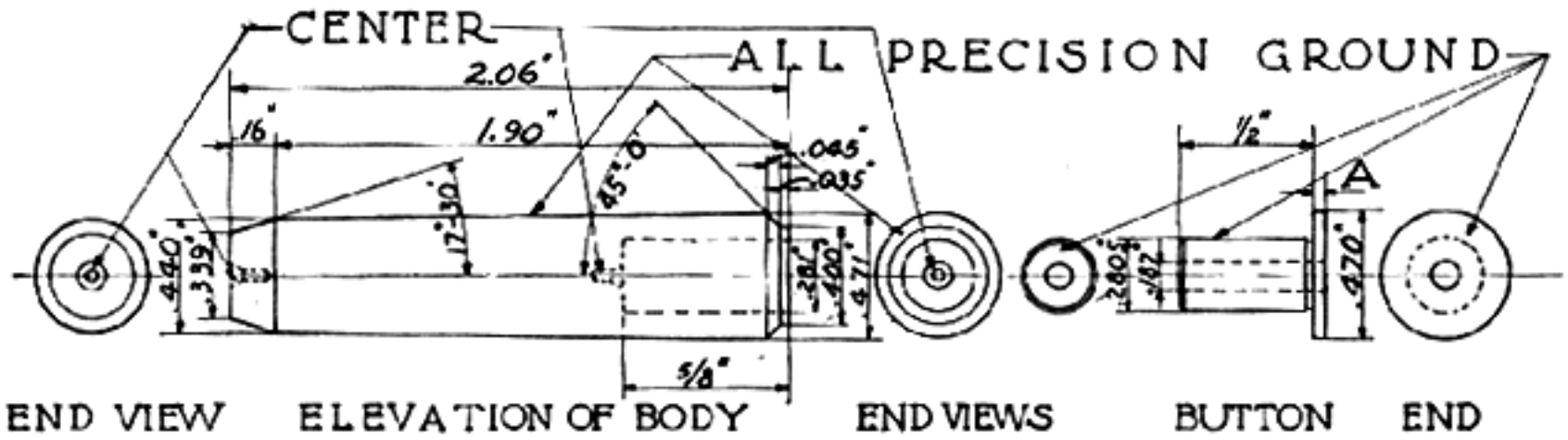

TABLE A	
.044" MIN.	.050"
.045	.051
.046	.052
.047	.053
.048	.054
.049" MAX.	.055

30 CALIBER MODEL 1903 HEAD SPACE GAUGE AND BUTTON

SAME STYLE CAN BE USED FOR ANY RIFLE USING A RIMLESS HEAD CARTRIDGE
HARDENED TOOL STEEL
BUTTONS .05" TO .055" THICK ARE FOR CHECKING SET BACK AFTER FIRING

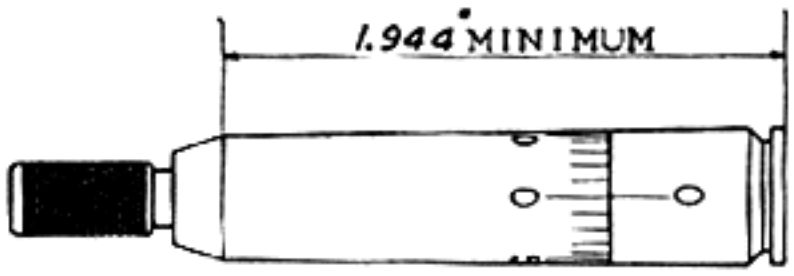

MICROMETER ASSEMBLED

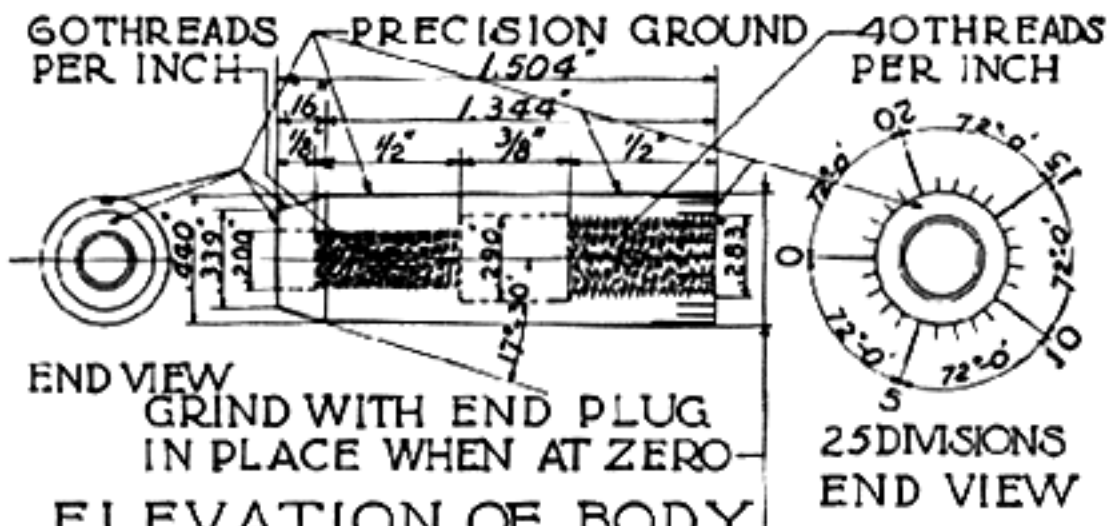

ELEVATION OF BODY

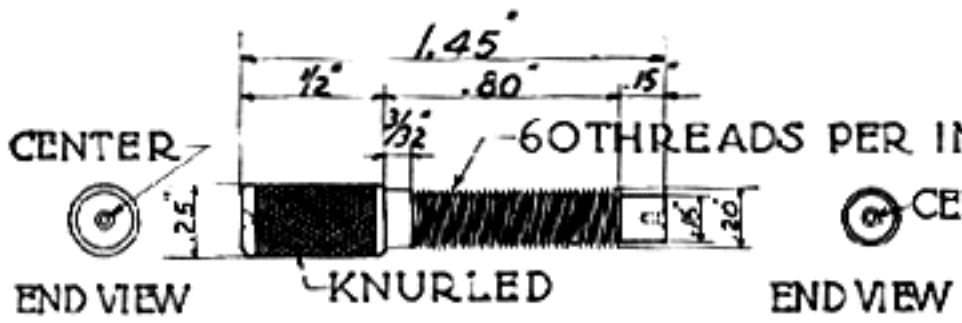

LOCKING SCREW

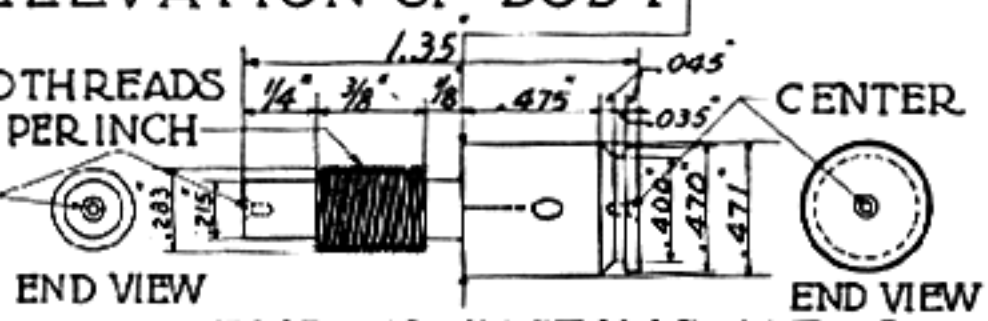

END ADJUSTING HEAD

MICROMETER HEAD SPACE GAUGE FOR MODEL 1906 CARTRIDGE

SAME STYLE CAN BE USED FOR ANY RIMLESS CARTRIDGE CHAMBER
HARDENED TOOL STEEL PRECISION GROUND

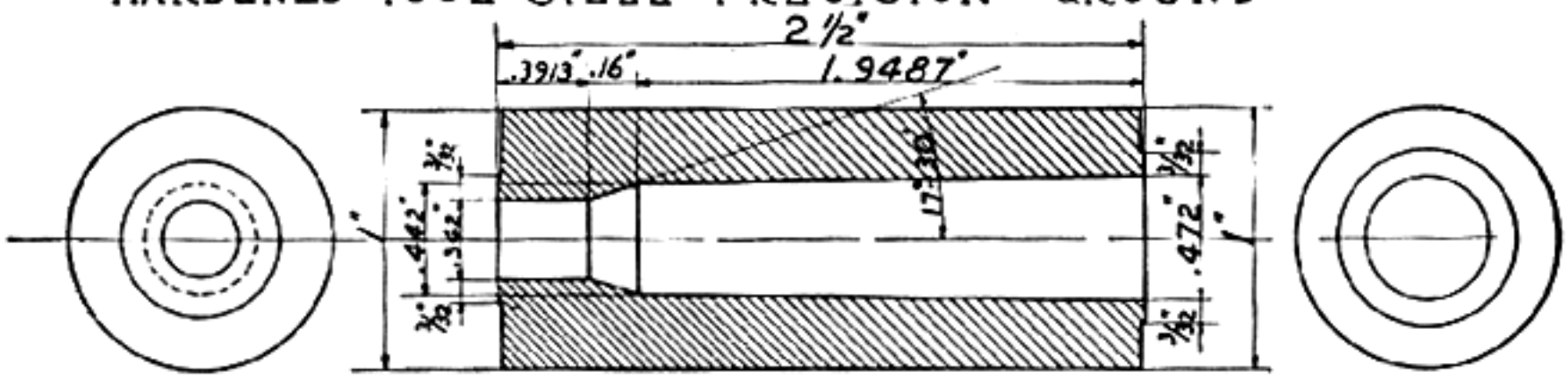

END VIEW CROSS SECTION END VIEW

HEAD SPACE MASTER GAUGE 30 CAL. MODEL 1906

HARDENED TOOL STEEL PRECISION GROUND

Fig. 71

Headspace gauges and master for rimless cartridges. For rimmed-head cartridges, a button gauge is used to take measurements from face of barrel to face of bolt

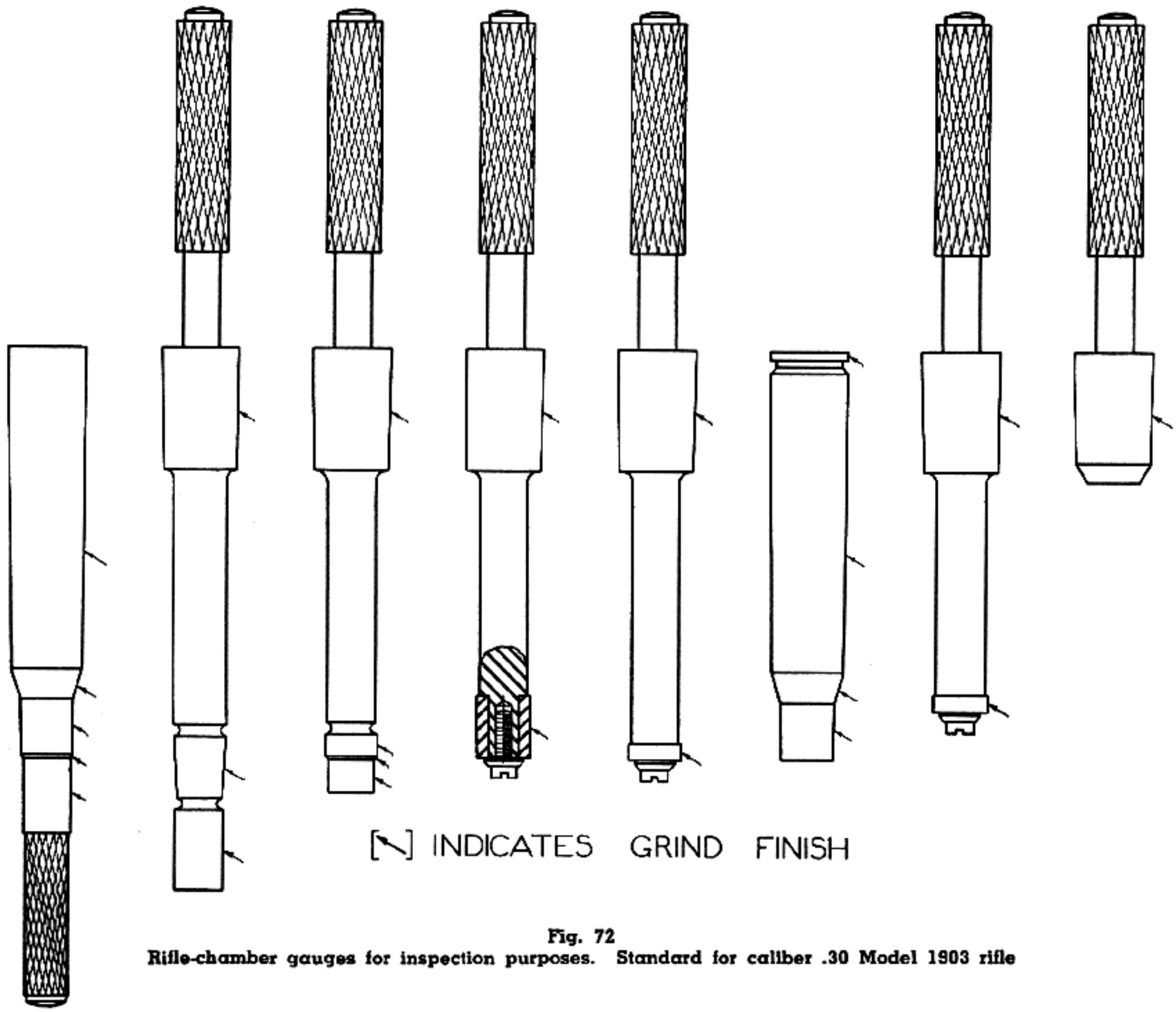

Fig. 72
Rifle-chamber gauges for inspection purposes. Standard for caliber .30 Model 1903 rifle

check the bore of a barrel, especially when pilots are used on the barrel reamers. These gauges are intended as a practical working standard. The internal measurements of a barrel should have a tolerance. Figure 60 gives these, but you may wish much closer measurements, so they may be adopted as standards and the plug gauges made accordingly. The plain cylindrical end of a plug gauge is ground and lapped to the exact diameter; these are the standards and must be adhered to very closely in all barrel work.

Gauges for the depth of groove or the rifling are made in different forms. Plug gauges are also constructed for this purpose with the leed of spiral for the intended twist. When constructing such gauges, only two spirals or gauging points are cut; these are opposite each other and only two grooves are gauged at one time. The construction of spiral gauges is done in a milling machine—shown in Figure 73—and the dividing head is set up to the leed of spiral desired. With a high-speed vertical milling attachment set in position, a small-end mill is used. First, the width of groove is milled, both top and bottom; then the land clearance is gradually milled out below the depth, which would be equivalent to at least 0.010 inch clearance. The fine end-mill marks are filed out with a fine needle file and the surface is polished. After they are hardened the outside diameter of the spiral is ground to the desired sizes for the depth of the groove. A series of such gauges should be made in steps of 0.0001 inch; with these it is possible to tell if there are any tight or loose places in the grooves, and at the same time know the true size of groove, not only in width but in diameter to the bottom of the groove. There are also the thin checking gauges made from $\frac{1}{32}$-inch ground gauge stock, as described in Chapter XI; these are used to check the depth of rifling when rifling a barrel.

When making a chambering reamer, two gauges should be made to set the sine bar so that the exact taper can be ground. The ring method of

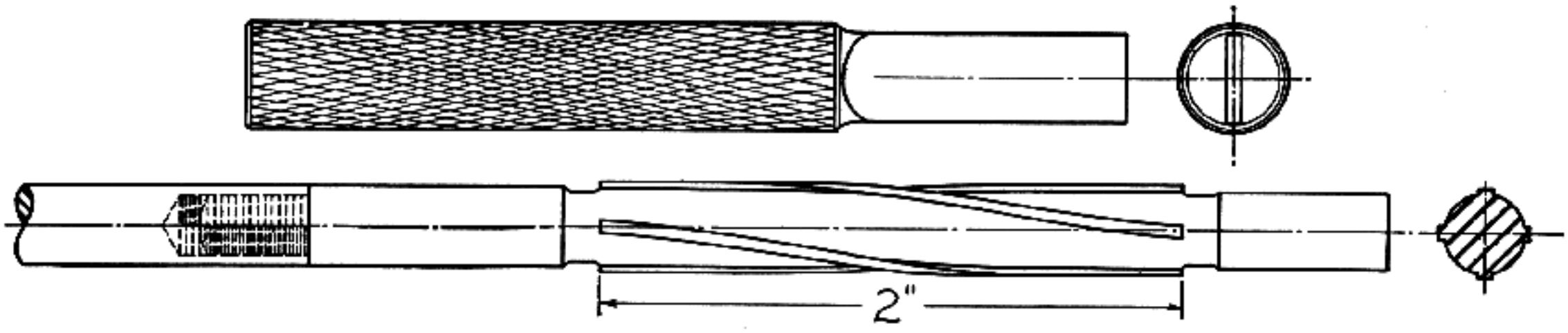

Fig. 73
Rifling gauges

testing these tapers is the most accurate. In Figure 59, illustrating barrel chambers, two sizes are given on the body taper of the chamber. Two rings are made, one for the size of the body at the shoulder and one at the base or end. Figure 63 illustrates this gauge. The test rings are turned to diameters *B* and *C* and located on a ground arbor, allowing the length of the latter to be 1½ inches longer than the greatest distance between two given lengths in any of the chambers illustrated. The rings may be hardened and ground to the exact diameters and the center hole also lapped so that it is just possible to slide the rings along the arbor. *A* is the given distance to locate the rings apart. After setting the rings to this distance, the sine bar is set up on an angle plate and clamped to the surface plate. An accurately ground parallel is used for the bottom gauging point. After adjusting the sine bar until it fits tightly on each ring to the given distance *A*, a small pointed indicator may be set at the point where the small ring touches the sine bar and parallel. Be sure that when grinding the taper this will be the point of the exact diameter, and allow 0.001 inch for stoning. This method of gauging such tapers is positive and eliminates all guess work or trying to measure these two points with a micrometer.

Barrel Counterbores — There are two forms of counterbores used to enlarge the bore in a rifle barrel, and for the purpose of setting in liners or rifled tubes. Figure 63 illustrates the two different forms. *A* is for a large bore where it is only necessary to remove a small amount of material, and *B* is for a small bore removing considerable stock from the bore. The chips are forced out from the rear with the oil pressure; whereas in *A* the chips are forced ahead through the grooves in the pilot. These tools are sweated to oil tubes so that it is possible to get sufficient oil pressure to remove the chips as the tools remove the metal. These are very simple tools to construct, as the illustration shows, and very practical for such an operation.

Accuracy is essential in practically all of these tools and in gauge-making operations and the standard methods of tool work as carried out in various chapters. Readers of mechanical literature who are mechanics will be familiar with this information, but the man who is just learning this class of work should consult reference books, of which there are many. Many subjects of this nature cannot be covered adequately in all their phases; if I were to cover the subject as it should be, it would be necessary for me to consult such books and merely copy the information. These subjects could be more comprehensive and have more detailed information, but I am assuming that the reader is far enough advanced in mechanics to carry out the ideas I have placed before him.

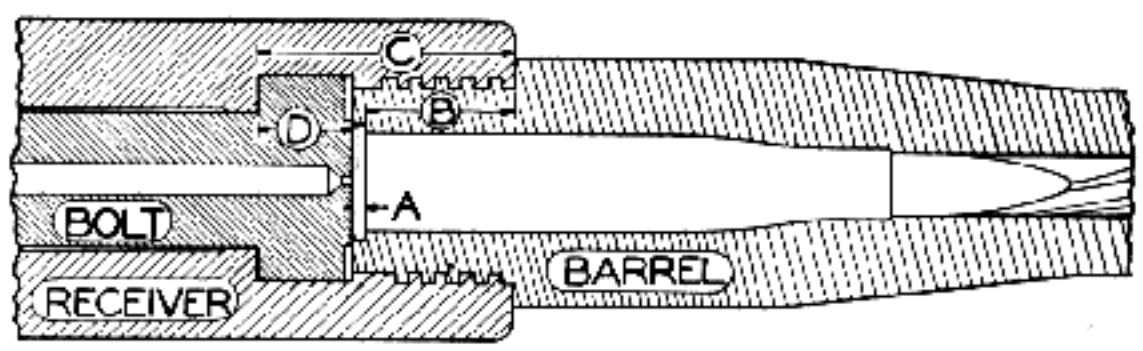

Fig. 74
Headspace measurements. Rimmed cartridge case shown in chamber

CHAPTER X

Barrel Drilling and Reaming

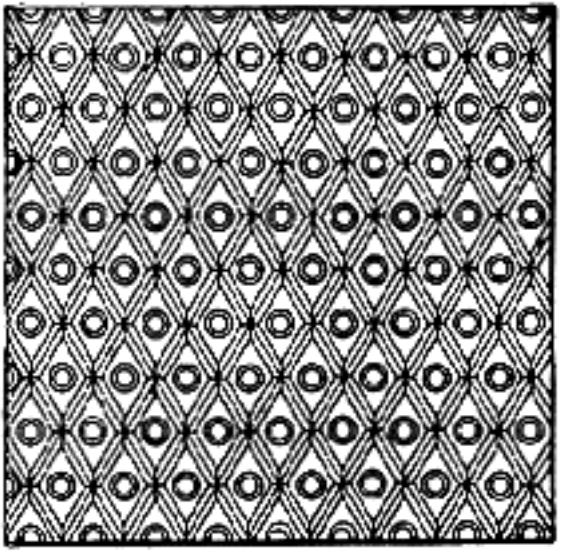

CHAPTER X

Barrel Drilling and Reaming

IN THIS and the following chapters I shall guide the student step by step through the art of barrel making from a different angle. The standard machine tools used in modern production will not be employed, but the barrel-making tools will be of standard design. We shall limit ourselves to a lathe and a milling machine. The entire operation may be accomplished on a lathe, but by using a milling machine it is possible to secure any leed of spiral. When a lathe is used altogether it requires many hours of work and necessitates making wooden drums with a cable connecting two dissimilar sizes. Sprockets and chains could be used, or even a rack and pinions on the back of the lathe to turn the spindle; a number of ways can be devised, but the milling machine affords a more simple and practical method.

Undoubtedly, some people will think these chapters a bit absurd, but before any one lets pessimism govern his attitude, allow me to cite, as an example, the barrels turned out by Harry Pope. There are men who would pay any price for a barrel with his name stamped on it; yet if you were to walk into his shop and purchase the lathe on which these super-accurate barrels are made, and were to give him over fifty dollars for it, it would be through the generosity of your nature. Nevertheless, for years he has turned out barrels on this lathe which have never been equaled by modern machinery. Naturally, I do not contend that a lathe should be used in preference to modern equipment, nor am I considering speed, number of operations, or number of barrels produced. This information has been written primarily for the man who cannot afford an elaborate set-up and must do the best he can with what he has at hand. If one is fortunate enough to possess the complete equipment, the chapter on barrel tools will be a standard in both cases.

The drilling of barrels was formerly done by hand and was regarded as a mystery. Today it is simply a mechanical operation differing only in degree from the making of other parts or tools. Nevertheless, the barrel is the most important part of a weapon, and care must be bestowed on it. After certain limits of accuracy in manufacture have been passed, there are no means of knowing whether the barrel will be an exceedingly accurate one, or whether it will only pass the ordinary test.

When the steel comes from the mill the barrel is rough-turned to the exterior shape or only the end turned, as will be suggested later, and drilled. The drilling may be done "straight through" from end to end in one operation, as Figure 75 illustrates, on a standard barrel-drilling machine, or when a lathe is employed it may be started at both ends and meet in the middle. In drilling and reaming, the drill bits and barrel reamers slide horizontally along the bed of the lathe while the barrel is caused to revolve. Lard oil which acts as a lubricant is pumped into the hole as the work proceeds, and washes out the chips or "swarf." The bore must be straight and concentric with the exterior. Straightness is tested by light and shade effects caused by the multiple reflections of the muzzle down the bore. The slightest lack of concentricity in these repeated circles is an indication that some correction must be made. This correction may be done by means of blows struck on the exterior of the barrel with a copper or babbit hammer, but modern methods favor the use of a special barrel-straightening press. For testing concentricity of the bore, full details will be given later in this chapter.

In their order, tools are made for the caliber and cartridge intended. For drilling a barrel, the drill and oil tube are made, and then the other necessary work upon the lathe is done, which enables one to carry out the operation without trouble. A lathe can be used for the drilling and rough-reaming without removing the blank from it. Our choice is a lathe with a 1½-inch hollow spindle with two chucks, as illustrated in Figure 76. If you have not a lathe with a hollow spindle as large as this, select one with a long bed in which it is possible to use a three- or four-jawed chuck and steady rest; however, if this is to be a continuous operation it will be advantageous to purchase a second-hand lathe and fit it up, making the chucks as shown in Figure 76. Remove the first adjusting nut on the opposite end of the spindle and make a chuck which will serve two purposes: to hold the barrel and turn the center for a belt connection. This provides a drive to connect a high-pressure oil pump which can be located on brackets fastened to the legs of the lathe.

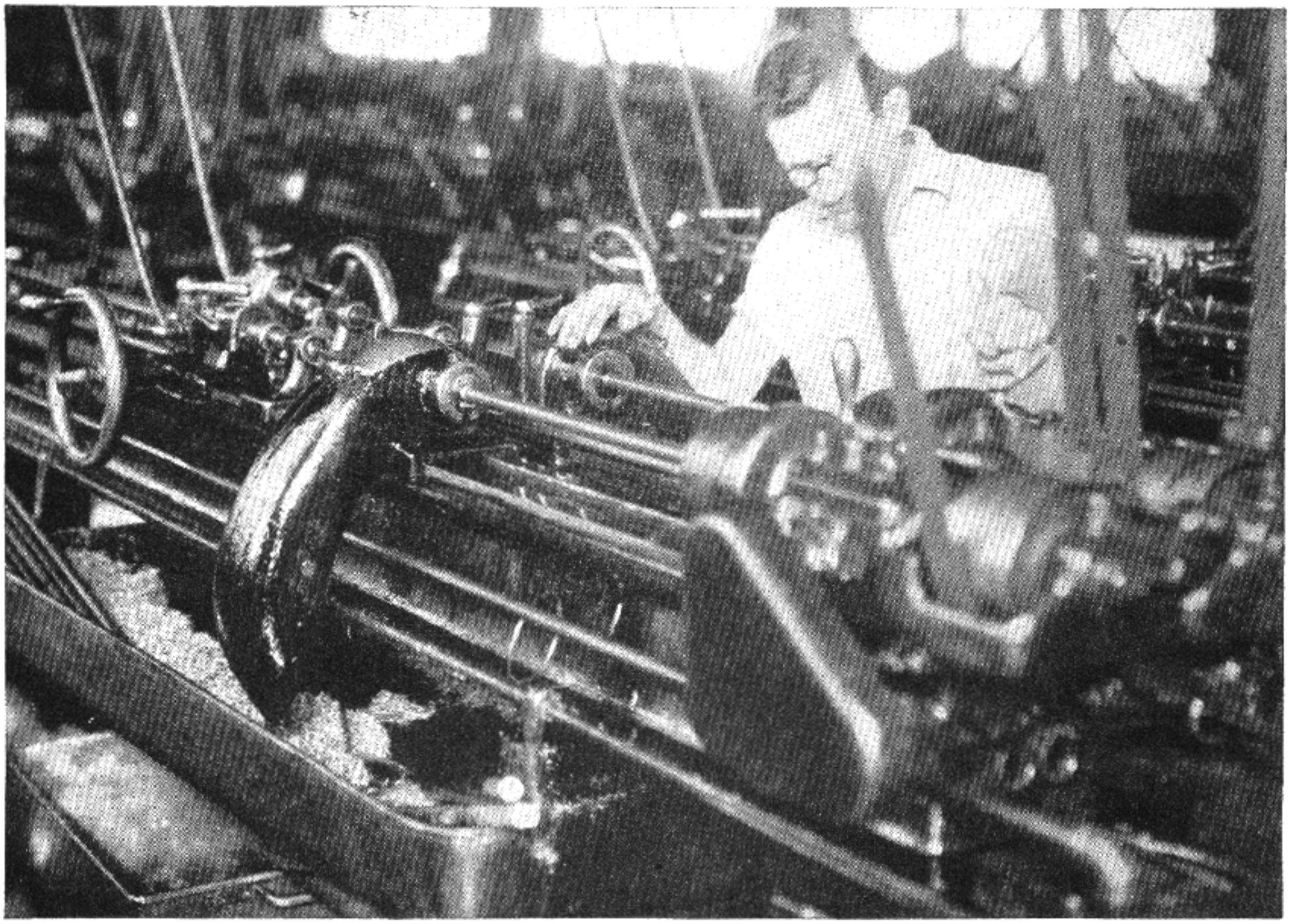

Fig. 75
Rifle-barrel drilling machine in operation

The front chuck can be screwed on the spindle and made either of cast-iron or cold-drawn steel. In making the chucks, four set screws are used in each one (Allen headless screws preferred) to true up the barrel blank.

A suitable pan of tin or galvanized iron is made, both for the back and front of the lathe, to catch oil; also a hood of tin to go over the front chuck with an elongated slot for the oil tube, which can be removed at will; and finally a tank for the returned oil. Suitable oil strainers should be made so that no chips can return to the oil pump and obstruct the flow of oil to the drill. The usual practise is to make an angle plate, as illustrated in Figure 76, to clamp to the cross slide where the tool post is situated. This is made of cast-iron or machinery steel, and since there are adjusting features for height, the correct location for center can always be held. Altho the tubing is comparatively light, construct a wooden frame to hold the drill tube in the center and at the end, so that it will not lag. Wooden brackets may be made in place of the wooden frame, and these can be clamped on the ways of the lathe and moved along as the drill advances in the barrel. A rather heavy rubber hose is connected between the oil pump and hose connection, as shown in Figure 61. Fasten with suitable clamps, which can be easily removed when changing from the drilling to the reaming operation.

Since it is not of importance to use a larger steel bar than $1\frac{5}{16}$ inch diameter, there will be ample room for the adjustment of the set screws; this encourages it to run perfectly true. Before setting the bar in place, center it on one end only; this can also be done before the removal of the tail stock from the lathe or the setting of the angle plate to hold the drill. Turn back a true surface and just remove the scale for about 1 inch. This affords an opportunity to have it run absolutely true between the two chucks with the set screws. Only allow about 1 inch to extend from the nose of the chuck where the drill starts. By turning this straight portion the blank may be trued whenever it is necessary to remove it. It would do no harm to turn the opposite end also for truing purposes.

Before drilling, place the steel in a furnace to normalize it and remove all strains in the bar. Hold the heat in the furnace between 1350 and

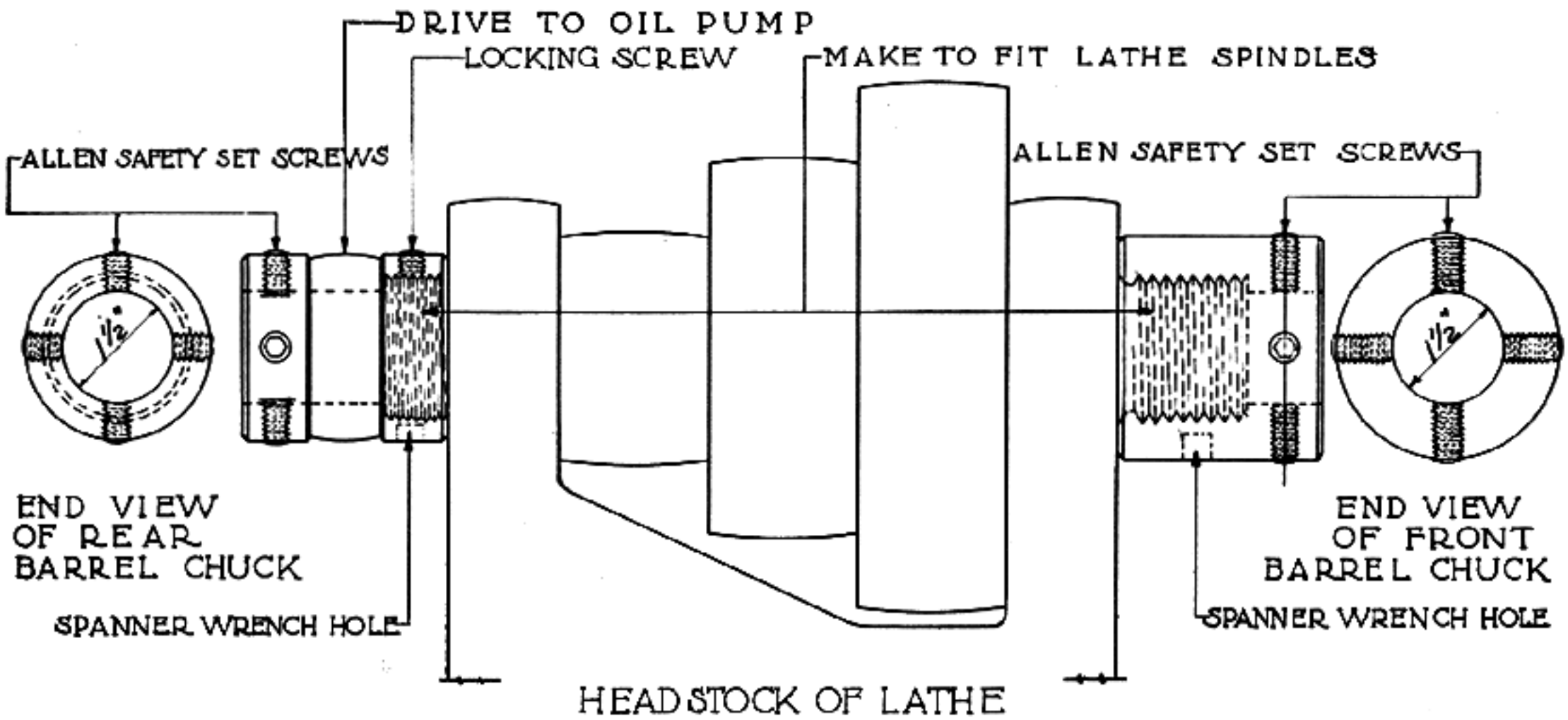

ELEVATION OF CHUCKS FOR FRONT AND REAR OF LATHE

MACHINE STEEL

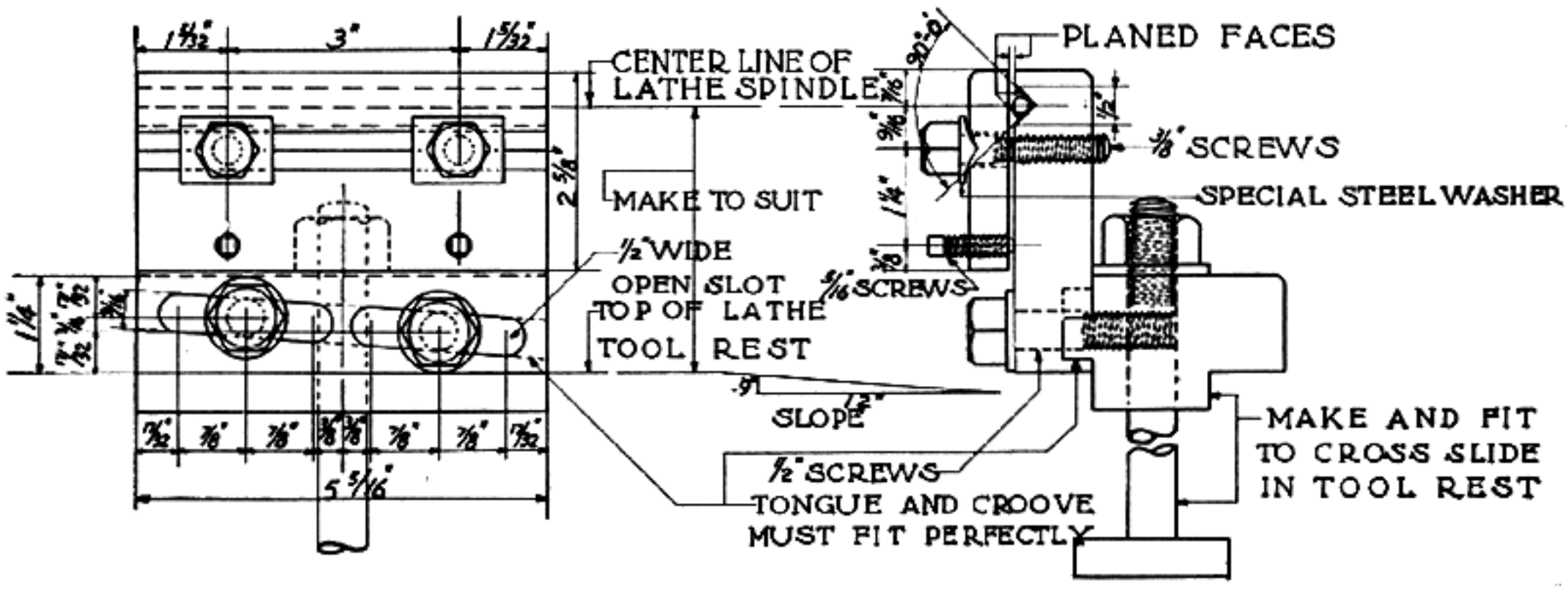

FRONT ELEVATION END ELEVATION

FIXTURE TO HOLD BARREL DRILL AND REAMER OIL TUBES

MACHINE STEEL

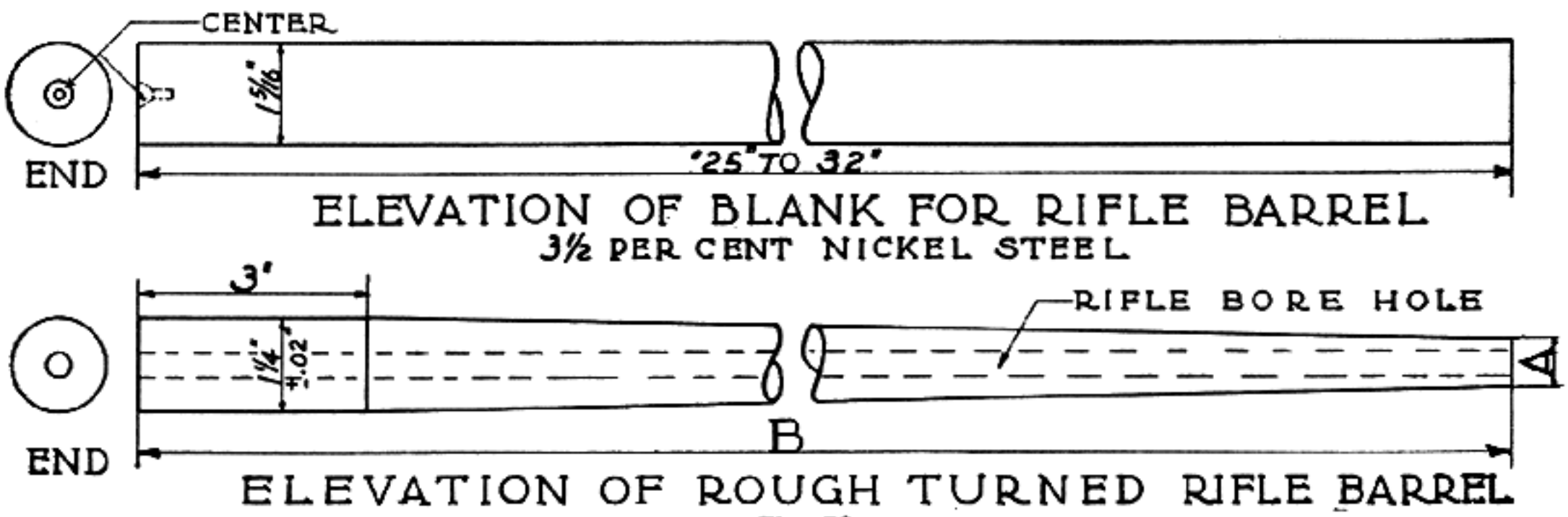

Fig. 76

Lathe head and chucks. Oil-tube holder, which is clamped in the cross slide. Barrel blank and table of barrel-blank turned measurements

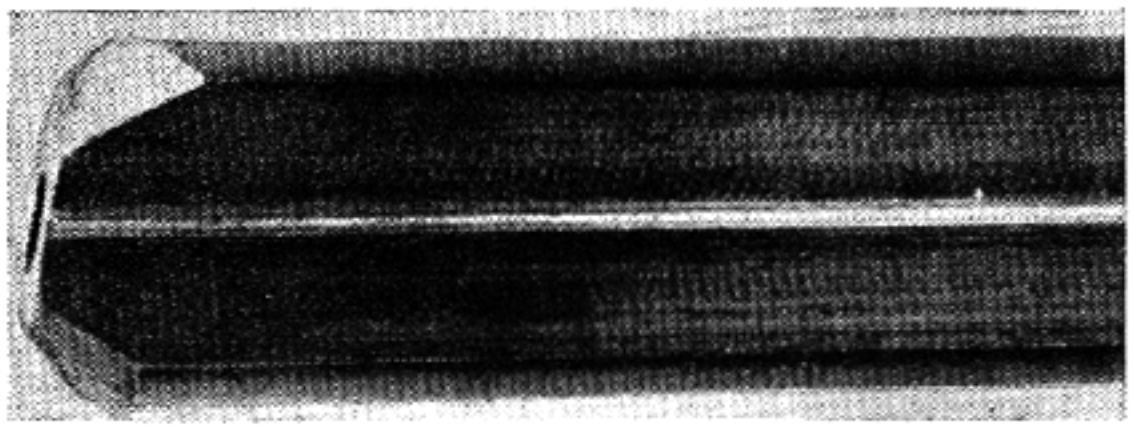

Fig. 77
Barrel-drill end, showing the cutting edge, oil hole, and chip groove. Study this illustration when grinding point of the drill

1450 degrees Fahrenheit for one hour, and then turn the furnace off and let it cool with the bars. Usually the most convenient time to do this is in the afternoon, removing the following morning. To remove any strains that might occur, anneal the bars after rough-turning and reaming. This precaution eliminates any possibility of ever having the barrel change in firing. Frequently you will get annealed bars from the steel mills that have been cut off in powerful shears; in such cases the resulting ends have a tendency to change positions when the barrel is not perfectly normalized before the drilling and turning operation takes place. In general, the necessity of straightening is not due so much to the fault of the steel as to heavy lathe cuts and turning tools which have not been ground correctly. We have had such barrels, after they become warm, change in grouping as much as 6 inches. One, which was tested after being completed, changed in grouping in rapid fire as much as 14 inches. It remained in that position and necessitated the construction of a special front sight.

Assuming that all set-ups are made with the drill clamped into place in the V angle plate, the barrel may be drilled. The finest feed on the lathe must be used and watch kept that the drill does not clog. The feel of the drill in the fingers will give evidence of this. The feed of the carriage must be slow, and the feed locking nut should never be tight; it should have only enough friction tightness so that if any undue pressure is exerted upon the drill it will have a tendency to cause the friction clamp to slip on the feed. A very fine ribbon chip should be maintained, passing out freely with the oil pressure. Lathe speed of approximately 1500 r. p. m. should be maintained. The regular double-head drilling machine can only drill a barrel between 30 and 34 inches long unless two separate drill rods are employed; however, in the operation given above, one is not confined to any specific length, provided the milling machine has a long table. Figure 77 shows the drill ground so that it has a small flat on the point; this will keep a true center and emerge true at the opposite end of the bar. The chip groove must be only 0.002 inch above center (if not absolutely center), for if it is 0.002 inch below the center a wire will come out through the chip groove; if the wire should catch in the drill tube the entire effort will be destroyed and the drill lost in the barrel. If this should happen, the barrel must be divided to recover the drill at the point of fracture.

In the drilling of the different alloy steels such as 3½ per cent nickel steel, spots will be encountered that are inclined to throw the drill off center slightly, but it will find its position again if the point is ground correctly.

To maintain the speed and feeds recommended in the foregoing, it will be found necessary to use the best grade of lard oil. The friction feed is more satisfactory to use than light feeds, as a straight hole is produced when the drill is forced to such an extent, even tho it is ground perfectly.

After the drill has passed completely through the barrel, reaming and rough-turning follow, and then straightening. You may find that the drill's exit is, say, 1/64 inch off at the opposite end of the bar; in that case remove and turn the barrel, using the drilled hole as centers, and starting the taper on the end at which the drill ran out. After rough-turning the barrel to half the desired finish size, check the bore for straightness. If it is very crooked, straighten and normalize as previously described. The succeeding description may seem somewhat technical, but I shall presume that the reader has the mechanical understanding to comprehend it.

Barrel Straightening — Barrel straightening must be practically self-taught, and to accomplish this it will be advisable to practise by the old method, then by the more modern method, and lastly by the present method—the overhead clamp with three fingers, the two lower ones being stationary and the inner one movable, actuated by a heavy double screw.

The oldest method employed was to stretch a fine steel wire inside the barrel from end to end, touching the sides at each end. One side of the barrel was hammered until it touched all along the wire. The wire was then moved to the opposite side of the barrel and if it touched all along the wire it was straight. The fixture illustrated in Figure 78 may be employed in this operation as well as in others for barrel straightening.

The method of shading the inside of barrels is much better and quicker if once practised. To determine whether a barrel is straight, hold it a few inches from your eye upon the knife-edge rolls shown in Figure 78 with one end of the barrel

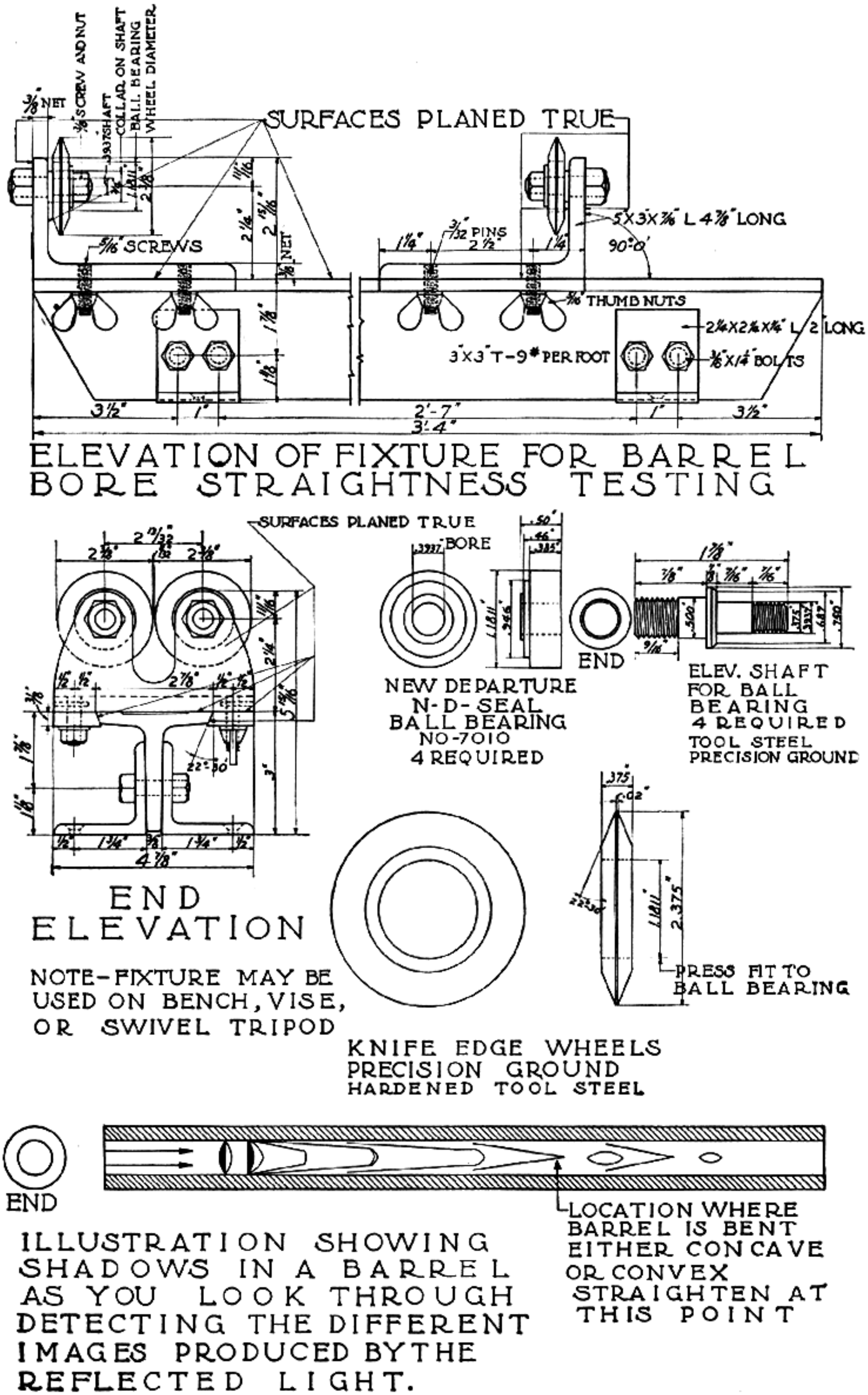

Fig. 78
Barrel-straightening fixture and illustration of light effect

pointing toward the top of a high shop window. The rays of light being horizontal, and the fixture and barrel at a slight angle, about half the bore will be in shadow; if the shade is irregular the barrel is bent or crooked. If the shade is perfectly level from breech to muzzle as the barrel is being turned around, the barrel must be a perfectly straight one. To straighten a barrel that is already finished, you should note where the swellings appear on the shade, and strike the barrel in those places with a hammer of lead upon a hollow anvil also padded with lead. If it is still in the rough, the padding may be removed for a more solid foundation. It can also be straightened from the indentation of the shade, in which case the barrel must be struck on the opposite side to the one shown on the indentation in the shade. After becoming skilled in this operation you can make a barrel perfectly straight with a few taps of the lead hammer.

A simple expedient for detecting the straightness of a gun barrel is as follows: Place the barrel at a slight angle in the fixture. Make a small frame, cover it with white tissue paper, and place it about six feet from the muzzle of the barrel, facing the window and good light. Point the barrel toward the top edge of the frame, and a dark shade will at once be seen upon the bottom side of the barrel. Turn the barrel around upon the rolls and if the shade keeps a perfectly true edge, the barrel is straight. Place, at any point between the frame and fixture, a lighted candle about three inches below the barrel. This test will cause the barrel to bend, and an irregularity in the shade will be immediately observed; when the light is removed, the barrel will return to its original form or very nearly so. This experiment can be carried out with a perfectly straight barrel. Use the candle a number of times to see the shaded lines and to observe by removing the candle, and the barrel will return to its original straightness.

The following explanation will probably give the reader a better understanding of barrel straightening. The barrel is revolved between the two knife-edged rollers on each end, and it is then possible to see the different light reflections as you revolve it. By this means you can straighten a barrel to a greater degree of precision than by any other process unless you visualize it for deviations from its long axis. Under these circumstances every part of the surface is a mirror and should register an image, true to the laws of light-ray reflection, which, when normal, pronounces it perfect; for the slightest deviation will cause a manifest distortion of that image in the process of straightening barrels, by the reflecting broken lines. After drilling the barrel we have a very rough surface, and the internal mirror is not secured until a reamer has passed through. Then we proceed to ream the barrel, as described further on. Reaming eliminates a considerable amount of the rough surface and gives the interior a mirror-like appearance; thus the light rays can be detected more easily. Whatever objects are reflected to the eye from any portion that lies beyond a certain distance, will be reflected under very small angles of incidence. Naturally the interior surface of a barrel is not a technically true mirror, and the reflection image can not be correct for the reason that for every 0.001 part of an inch that a barrel may be out, a marked difference is registered. If the bore is straight the image will show a normal distortion, due to the transverse of the mirror. Suppose there are longitudinal flexures or crooks; in this case, there will be abnormal distortion of the image, which will reveal the defect.

When the eye looks through a gun barrel the interior surface appears to be spread out in a circular disc as far from the eye as the other end of the barrel. Through the center of this disc is a circular orifice, and surrounding it, at equal distances from each other, are several well-defined circles dividing the disc; thus the second, third, fourth, etc., are images formed by light reflected two, three, four times. In order to see how these images are formed and to find their respective points of location in the bore, turn the barrel in the fixture and you will see the changes that take place, by the breaking up of these images. It will be observed that these images are located at a certain point in the bore nearest the eye. In two-thirds of the length of the bore, none of these images appear, so it is to this part of the bore that you must direct your attention, for it is here only that you can cause the reflections to appear which disclose the crooks in the tube if any exist. When this part is straightened, reverse the barrel in the fixture and work to the opposite end to see if the images appear pronounced. Figure 78 will give a fairly definite explanation of the above. If the bore is perfectly straight the set will always remain a true and a symmetrical parabolic form growing more and more pointed toward the apex until it reaches the further end of the tube, but if there is even the slightest flexure or crook in it, the parabolic figure of the image will be distorted. If a distortion is discovered, revolve the barrel slowly about its axis after it is retained in the rest on the knife-edged revolving rollers, and you can then easily detect the slightest deviation. Of course it will require experience to tell how far the point of distortion is from the eye, but when that is learned you will be able to place your forefinger at this point, holding it there until you place the barrel on the anvil or overhead press to straighten and to

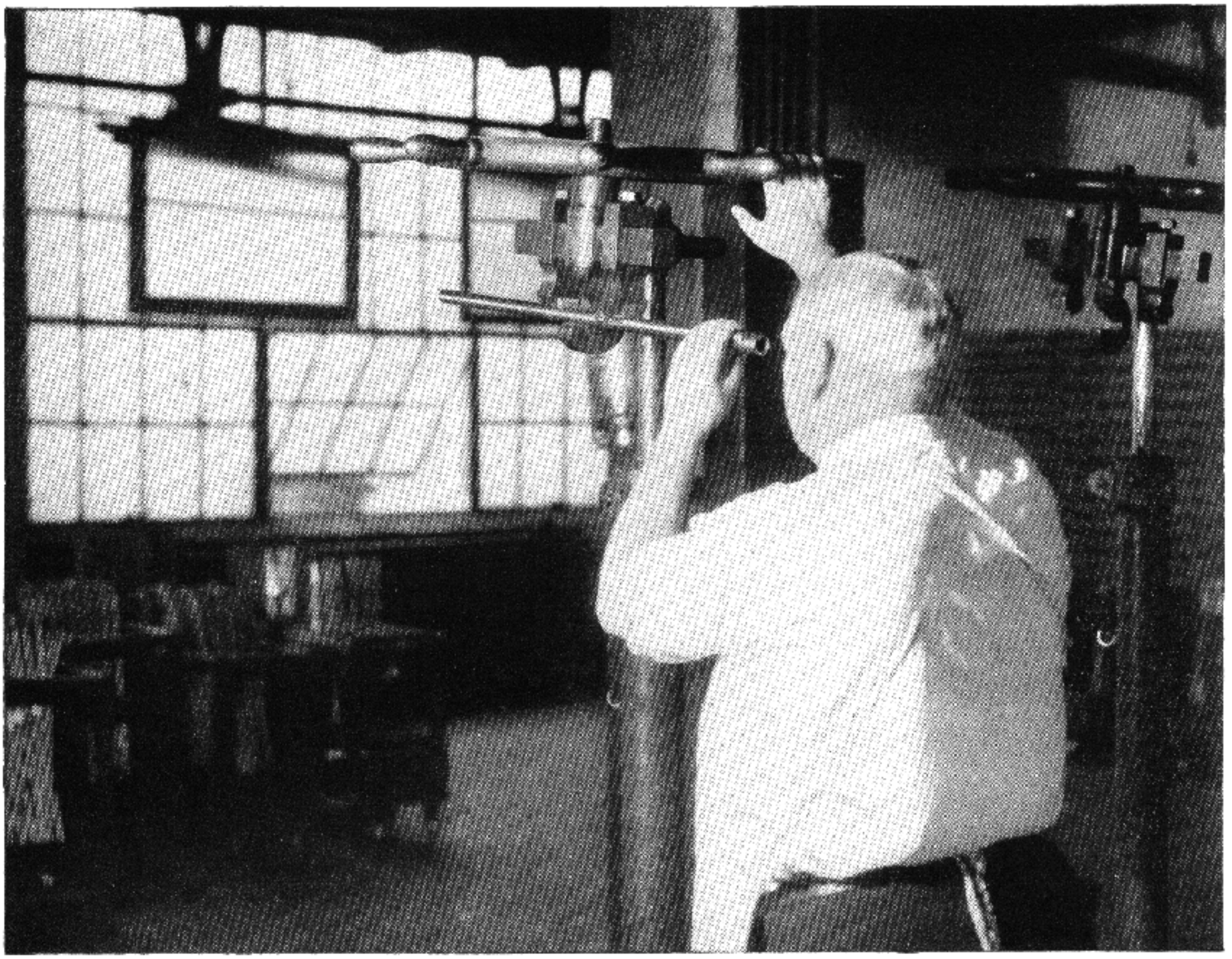

Fig. 79
Standard method of straightening rifle barrels in the Remington Arms plant and other arms-manufacturing plants

know how much elastic limit the steel will require to bend it the correct amount.

Before the overhead screw press came into use, the method used was to place the barrel upon two wooden stands or V's, the barrel facing a window across which a wire was stretched. Where the bend was discovered, the barrel was laid on a hollow anvil in which two pieces of lead were used to protect the finish. The striking was done with a lead hammer at the position of the bend. This method is superior to the modern overhead clamp press when rifle barrels are made from the proper steel and given the proper heat-treatment. A hammer blow does not break the steel structure as does the sudden twist of the overhead screw clamp. The hollow anvil and hammer method is far more difficult to master for the person who is just gaining experience, but once mastered, better results will be obtained. The beginner must learn to regulate the blows of the hammer, making it produce the desired results without any effort. Since weights of barrels vary, the larger the barrel and the nature of the bend, the heavier the blows that must be struck upon the tube; and because this required force varies so, the truing or straightening will require more time. For the person who is just starting to do this work, it will be convenient to use chalk on the point hammered to tell just where the location was and also to tell just how much good was obtained from the last blows struck.

Nearly all the large arms plants use the overhead clamp press for straightening barrels. Figure 79 shows the clamp in use. The lower side of this device has two heavy steel fingers about six inches apart; between them is the center finger which is fastened to the screw; the pressure is regulated by the large hand wheel. The barrel is pointed directly toward a shop window which has a small rod, lath, wire, or a clearly visible line in front of it, throwing a distinct shadow along the bore at the bottom. If the shadow's edge appears perfectly straight, the barrel is straight in its entire length. If the shadow breaks or shows a curve or bend you will know there is a crook or bend at that point.

The skill of the beginner in using one of these presses lies in his ability to judge by eye the exact location of crook or bend and its proper location and direction or position, and to slide the barrel backward or forward on the lower fingers to the exact spot. In order to straighten the bore, turn the wheel to the required amount of pressure. This is accomplished by sudden jerks, giving the barrel a springing effect as tho sudden blows were struck with a hammer, except that these are more severe on the steel. By watching the shadows carefully it only requires a few minutes to straighten any barrel. Care must be used in this operation so that too much pressure is not placed upon any size of barrel. The only pressure required is that of the short, sharp jerks of the wheel, which is enough to bend the barrel slightly in the opposite direction—just sufficiently so that when it springs back it will return to a straight line. Too little pressure will not remove the crook permanently, and too much will place a bend in it the opposite way. If you have a press of this nature it will be well to test both methods and judge the best results between the press and the hammer and open anvil.

Reaming — Let us suppose we are completing a .25 caliber. An allowance of .012 inch is made for the reaming; therefore the drill is made to measure .238, the first roughing reamer .244, and finishing reamer .247. This now allows .003 inch for the burnishing reamers. Figure 54 shows the roughing reamer, which is made on the same principle as all the other reamers, except that it only has four flutes, and finishing and burnishing reamers have six flutes. It is now in order to complete the reamers and sweat them to the oil tube. Make the necessary fixtures for the end of the tube, like those made for the drill tube with a hose connection. Clamp the tube in the V-fixture on the cross slide of the lathe in the same manner as the barrel drill was clamped. As this is drawn through, reverse the feed and start the machine. It is not necessary to change the clamp of the tube in the V-fixture on the cross side, as this can move back to a much greater distance without undue strain upon the tube. Provisions were made in the drilling operation to extend the oil pad back far enough to catch the oil as it passes from the rear end of the barrel. After the roughing reamer is passed through, pass the finishing reamer and check the alinement. The barrel is now turned to the desired size, allowing $\frac{1}{32}$ inch for finishing; to complete this process, pass first, second, and third burnishing reamer, to bring bore to the desired size of .250. These are illustrated in Figure 54.

The oil pressure need not be as strong as it was in the drilling operation; accordingly provisions must be made for a valve to reduce it. It is only necessary to remove the fine chips that follow the reamer. Figure 54 shows the spiral reamer, but its employment is not necessary; a straight reamer answers the same purpose except that the former eliminates much of the chatter which follows when the straight reamer is not made exactly as it should be. This point should be taken into consideration thoroughly, as the burnishing reamers will not be able to cut out some of the deep chatter marks left, and these will have a tendency to pick up metal if not entirely removed. Burnishing reamers are the only kind that will eliminate all tool marks and leave the bore a perfect mirror surface, doing away with minor abrasions that a regular cutting reamer leaves and which can be seen under the magnifying glass. As you look through the barrel, after the finishing reamer has passed, a mirror-like surface presents itself; however, if you should take that same barrel and sectionalize it, you would find deep scratches that the tool left. After passing the burnishing reamer through, observe a small section and you will see the difference in the results of these two forms of reamers. If one wants to eliminate the least possible error in the finished barrel, it is necessary to have three reamers, .001 in steps, which, after passage in order of size, will be followed by the most desirable results.

After the roughing reamer is passed through the barrel it is checked for straightness, and since the rough interior finish has been removed the shadows may be seen more distinctly. When reaming barrels it is advisable not to have any more material to be removed by the reamers than is absolutely necessary. When drilling rather hard barrel steel, frequently 0.010 inch left for a reamer to remove is hardly sufficient, but as the size of the bore increases in rifle barrels, drills must be comparatively reduced in size to allow more for the roughing reamer to remove.

The student will find various reasons for the inefficient working of a roughing, finishing, or burnishing reamer. The most common are: (a) chattering, when the flutes are not evenly stoned, milled back of center, or when they are stoned with too great a clearance; (b) chips clinging to the flutes, caused by a high revolving velocity, or the flutes being stoned out, allowing saw teeth to form on the cutting edge; (c) enlarged holes caused by the reamer cutter being oversize—often from holding the oil tube too rigidly. A floating holder should be provided which is held in the V holder, for with this it is often possible to ream a barrel on a lathe without any change. There are various methods adopted to prevent reamers from chattering; I have

found that when making these tools it is advisable to test them in a sample piece of metal and continue to stone the high point until an even full chip is noted in each flute. This edge is kept by rubbing an Arkansas stone over the flutes lengthwise before a reamer is pulled through the barrel. A free supply of oil must be continually flowing to keep the reamer well lubricated.

The surface speed for reaming should be rather slow; on a regular barrel-reaming machine, the reamer turns; but on a lathe, the barrel turns and the reamer is stationary. Instead of using an open belt with a high speed to drill this, it now requires a slow speed with the back gears in position. The feed can be made faster when used for drilling, as a barrel reamer is pulled through and used for a greater depth and has more cutting edges in contact with the barrel. For the roughing reamer you can use a feed twice as fast as that for finishing. When a good supply of lard oil is used, the burnishing reamer should have a very slow feed as well as a slow speed. Usually three reamers are used for this operation in order to obtain the finest results. A steady flow of oil must be passing through to remove the fine chips, and before the next reamer is used the barrel should be wiped out thoroughly.

After the roughing reamer is used, the barrel is checked for straightness and then turned down within $\frac{1}{32}$ inch of the finished size, and again normalized. The barrel is again checked for straightness. If perfect, the burnishing tools are next in order and the bore is ready for the rifling operation.

After the drills and reamers are made—and kept in order—many barrels can be turned out with them. It is a simple operation, and with this information and the tools to produce a barrel, the student will become enthusiastic over the results, especially when he has the tools working perfectly.

The following is a table of drill and reamer sizes:

Caliber	*Drill Diameter*	*Roughing Reamer*	*Finishing Reamer*	*1st Burnishing Reamer*	*2nd Burnishing Reamer*	*3rd Burnishing Reamer*
.22	.207	.212	.2145	.2155	.2165	.2175
.25	.238	.244	.247	.248	.249	.250
6.5 mm.	.244	.250	.253	.254	.255	.2563
.270	.256	.264	.267	.268	.269	.2703
7 mm.	.262	.270	.273	.274	.275	.2766
.30	.285	.293	.297	.298	.299	.3003
.303	.285	.297	.300	.301	.302	.3033
.32	.295	.304	.308	.309	.310	.3113
.350	.332	.343	.347	.348	.349	.3504
.375 Mag.	.350	.360	.364	.365	.366	.3673
.404 Mag.	.397	.407	.411	.412	.413	.4143
.405	.388	.398	.402	.403	.404	.4053
.45	.430	.443	.447	.448	.449	.4503

CHAPTER XI

Rifling Barrels

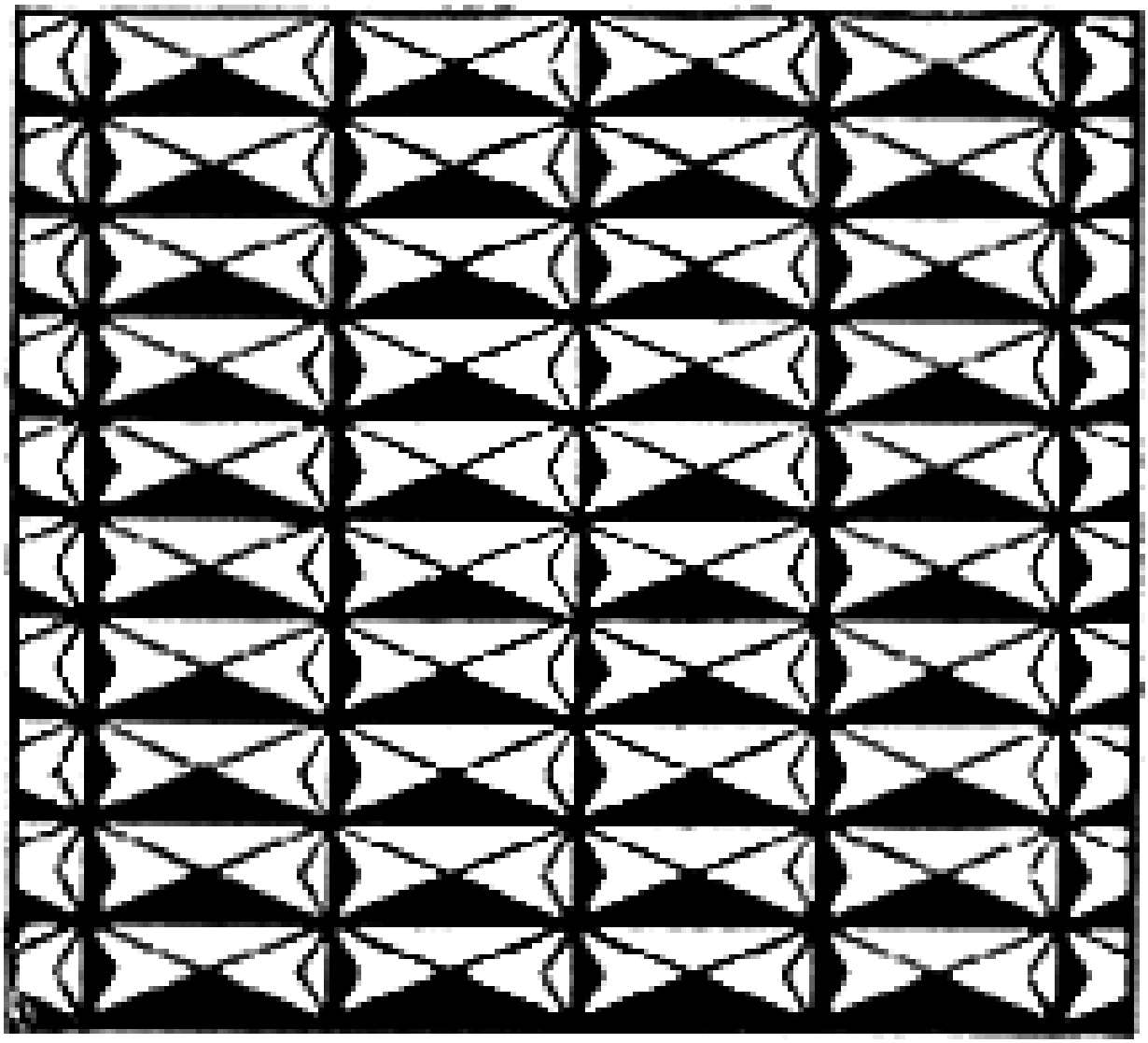

CHAPTER XI

Rifling Barrels

THE method by which rifling is placed in a gun barrel has been a source of mystery to users of rifles as well as the trained mechanic, and our best men often spend hours trying to solve the problems of the operation. Since the adoption of the breech system of loading, involving the use of brass cartridge cases and both lead and jacketed bullets, we have seen many different systems of rifling on the interiors of gun barrels. By loading the rifle from the breech instead of from the muzzle, it is possible to use a bullet of a size to fill the grooves of the bore; thus gas escapement is prevented, and as the bullet takes the rifling, accurate shooting is possible. Instead of deep grooves and a soft spherical bullet that was necessary for the old muzzle loader, we now require jacketed bullets of cupro-nickel, or a copper alloy, and a shallow groove for our modern projectiles in high-velocity arms.

The shape and depth of the grooves in our muzzle-loading rifles were of no marked importance, but in our modern barrels a bullet much larger than the grooves of the rifling causes undue pressure, particularly a jacketed bullet. Still, a lead bullet fired in the same barrel can be made slightly larger and fired independent of the rifling and depth of the groove. In our modern weapons using metal-cased bullets, shallow grooves are imperative and the nearer the rifling is made to the smooth bore the finer the results in accuracy will be.

The rifling with which the name of Medford is associated, consists of wide grooves and narrow lands, or the lands and grooves of equal width and the rifling of a uniform depth of 0.004″. This system has proved best, altho there are slight modifications of the number of turns in the twist or spiral of the rifling. Mr. Medford laid the foundation for the most successful rifling, and altho others have done an enormous amount of fairly successful experimenting in later years, it was impossible to find a more perfect system than his. You can still find advocates of the oval system of rifling with which the name of Lancaster is associated—a system for large-bore rifles. Applied to modern high-power weapons, however, such a system prevents the accuracy desired and is not applicable to all barrels—that of the Newton rifle, for instance. Altho the latter had a good action, the barrel unfortunately was very poor, for this point of rifling in design appeared to have been overlooked by the experts who decided upon the rifling to be adopted.

The Rigby method of rifling looked more like a ratchet as it was viewed through the barrel; the deeper part of the groove was on the driving side as the bullet was forced through the barrel, so that when it rotated during flight it would cause the least possible aerial friction. Therefore, our present success with rifling can be linked up with the Medford and Rigby systems, developed over a number of years. Of recent years all barrel makers of reputation, together with the arsenals of the various nations, realized the advantage of this rifling. Combining the two riflings—such as holding the square side of the Enfield and modifying the Rigby by a slight radius to the driving side of the groove—proved to be nearer the ideal rifling for extreme accuracy. The depth of rifling should not be greater than is necessary to grip the bullet and prevent it from "stripping" within the barrel. The nearer the bullet is to a perfect cylindrical form free from deep grooves produced by the rifling the less will be the resistance it offers to air.

Rifling consists of cutting away the interior of a drilled and reamed blank of steel in such a manner as to form spiral grooves upon its surface, the purpose of which is to guide the bullet down the barrel, forcing it to turn upon its own axis like a top, and at the same time impart to it a revolving motion which it will retain during its entire flight. By such means it equalizes any irregularities and lessens the tendency to depart from a straight and direct course. The rifling is done on a modern machine which pulls the rifling head through the barrel and is so arranged that any angle of pitch, turn, or shape may be given to the grooves. The remaining sections left by the grooves in the interior of the barrel are given the term "lands."

The enlargement of a rifle barrel has often been a means of using it for another caliber after it has become worn. Such an operation is possible, but the enlargement done by a manufacturer usually costs as much as a new barrel. Those, however, who wish to accomplish this with the set-up given

for the standard drilled barrels may do so with a slight alteration from the standard set-up, which will be discussed later in this chapter.

The spiral or twist in different modern calibers varies from one turn in twenty inches to one turn in eight inches. The longer the bullet in respect to its diameter the quicker must be the spiral in order to maintain a higher spinning effect, thus establishing greater stability during the flight of the bullet and keeping its point on instead of letting it turn over. This is one reason why such a fast spiral is given the 6.5 mm. barrel. The spiral in our caliber .30 Model 1903 barrel is one turn in ten inches. Different weight bullets perform with equal results, and still the higher the velocity the slower the spiral; this has been proved by experiments such as one turn in twelve inches and also one turn in fourteen inches, but the latter spiral is not so good on long-range shooting. The main object is to design a barrel with the correct rifling and the desired twist that will not allow a bullet to keyhole. Some rifling is so designed that fair accuracy is possible on short ranges, tho after that has passed there is a tendency for the bullet to keyhole because of reduced velocities. Many .22-caliber rifles come in which keyhole the bullets. After checking into the cause it is found that the barrel is so enlarged in diameter that the bullet does not take the rifling. It is much better to have a little faster spiral in a barrel than a slower one to handle various defects found in bullets. The faster the spiral and the wider the lands the greater the friction; therefore the design of faster twist requires the reduction in lands as well.

Measuring Bores — The arsenal takes the final measurement of the bore of a rifle barrel with an instrument called a "star gauge," but since this is only made to measure the bore of a .30-caliber barrel, various other means must be employed by the student. Chapter XVIII explains the common method used with a lead plug. A star-gauged barrel is simply one which has been measured by this instrument and found to come within the tolerance set, which is 0.0005 inch on a caliber .30 barrel. All National Match barrels are star-gauged, and on the muzzle is found a small stamp in the form of a star which shows that the barrel reads between the minimum of 0.3080 inch and maximum of 0.3085 inch. The correct figures are usually given on a regular star-gauge card, showing the correct figures found in every inch of the bore.

If you are making your own barrels and following the instructions given in these chapters, it will be necessary to make some simple gauges. If the barrel reamers were made to the correct sizes and all instructions carried out precisely in their making, they should cut the exact size of any bore of barrel intended. For the satisfaction of knowing that the size is correct, a plug gauge should be made, or even two; one for the maximum diameter and one for the minimum size. With these gauges you can always check the reamers, know when they start to wear, and when new ones should be made; however, a well made burnishing reamer will last for a number of barrels and a plug gauge is only a check to prove that a perfect-sized bore is maintained.

Gauges should be made from $\frac{1}{32}$ inch Brown & Sharpe ground stock or from Disston Saw steel of the same size. Three gauges are required in 0.0005 inch sizes or constructed in 0.0002 inch for making a target barrel. A set of six gauges should be made to the latter figures as these will enable you continually to test the groove made by the cutter. An allowance of 0.0002 inch could be made for the lapping, or if the interior is to be chrome-plated, 0.0010 inch oversize must be made. When these gauges are used to measure the groove diameter, they should be kept at a knife edge so that it is possible to measure into the exact center of the groove.

To detect any tight or loose places in the grooves, and also to determine how smooth a barrel should be made, use a series of gauges with the clearance of the lands cut out on a milling machine into the cylindrical portion of the plug—on a spiral similar to that of the rifle barrel. These are made in the same size as the thin feeler gauges used to check the grooves in the end. By pushing each plug through until the maximum plug is reached—which will just push through with friction—the grooves will be proved to be of uniform size the entire length and free of tight places. If the student does not care to go to all this trouble, Chapter XVIII, which describes a more simple method, may be referred to.

There are different ways of rifling a barrel: with the standard Pratt & Whitney rifling machine or with the set-up of a lathe or of a milling machine; even a planer may be used, and the old method of using an old barrel as a guide. We shall, however, confine our explanation to the milling machine. Nearly every tool shop is equipped with a Brown & Sharpe Universal milling machine or a good Universal machine that has the different change gears for the spiral milling. It is possible to obtain a great variety of turns of spiral to the foot, or the leed in inches, and by turning to the table of "spiral milling" in the *Machinery Hand-Book* you will have a wide selection. Any combination of twist or spiral may be had for any bullet by

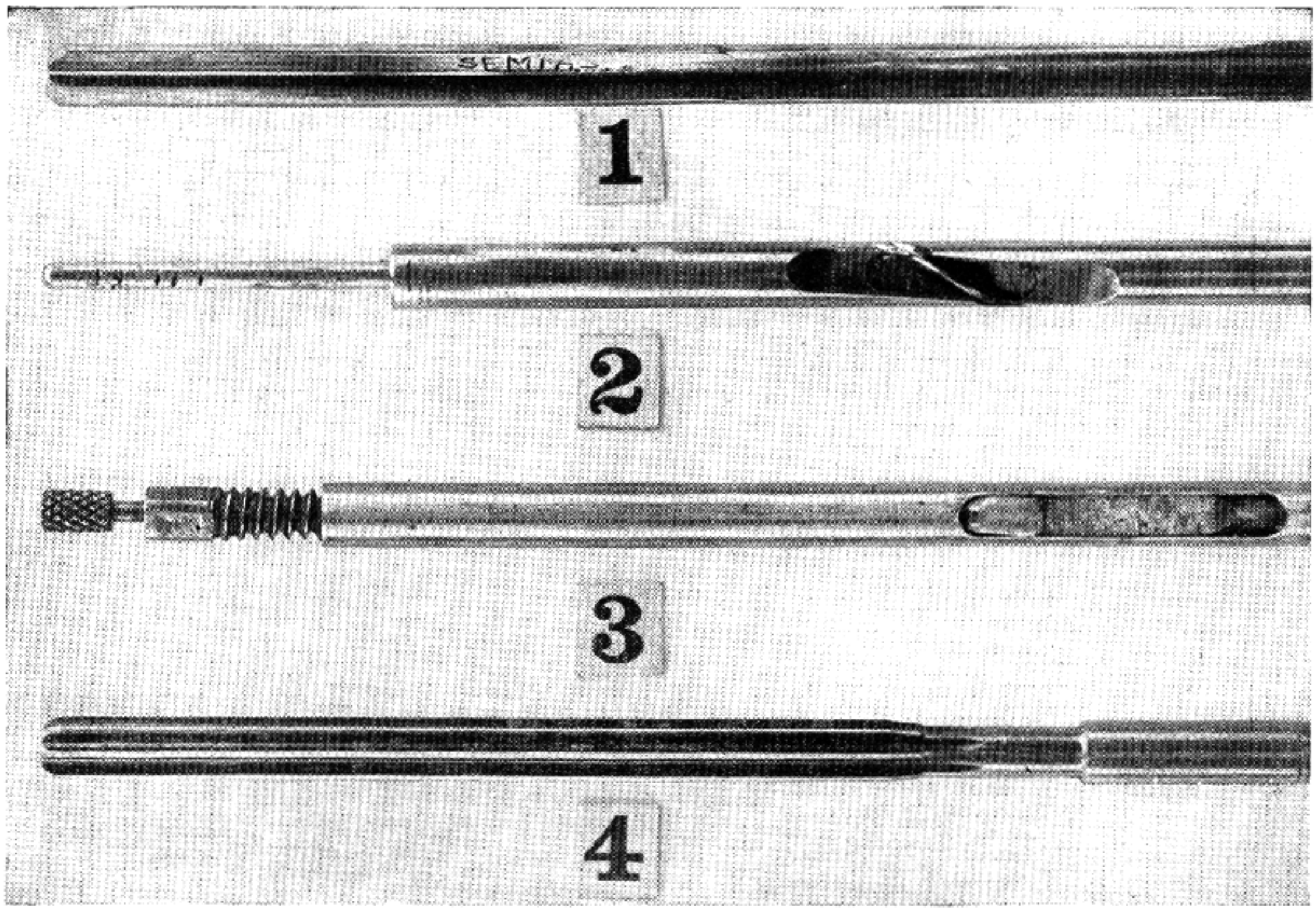

Fig. 80
Gun-barrel tools: (1) Barrel drill welded to oil tube. (2) Scrape-cutter rifling head. (3) Hook-cutter rifling head. (4) Standard barrel reamer sweated to oil tube

making the required set-up. Figure 80 shows the standard barrel tools used for caliber .30 Model 1903 barrel, and Figure 81 the barrel rough-turned and finished.

It is then necessary to make an arm to clamp on the face of the milling machine below the driving spindle to hold the rifling head. As this arm can be moved along in any position, the expense of making one should be considered incidental. Figure 82 illustrates the rifling arm in detail, and from a pattern that you have had made at a pattern shop, the casting for it can be made; furthermore, if you have the planer which will carry this size casting you can do the work yourself and save considerable expense. This is the only fixture required on the milling for the rifling operation, and is very reasonable compared with the expense incurred in setting up a lathe for the same operation, in which case you would only have the one turn—say one in ten inches.

By using the lathe it is also necessary to make two drums; a small one fastened to the ceiling

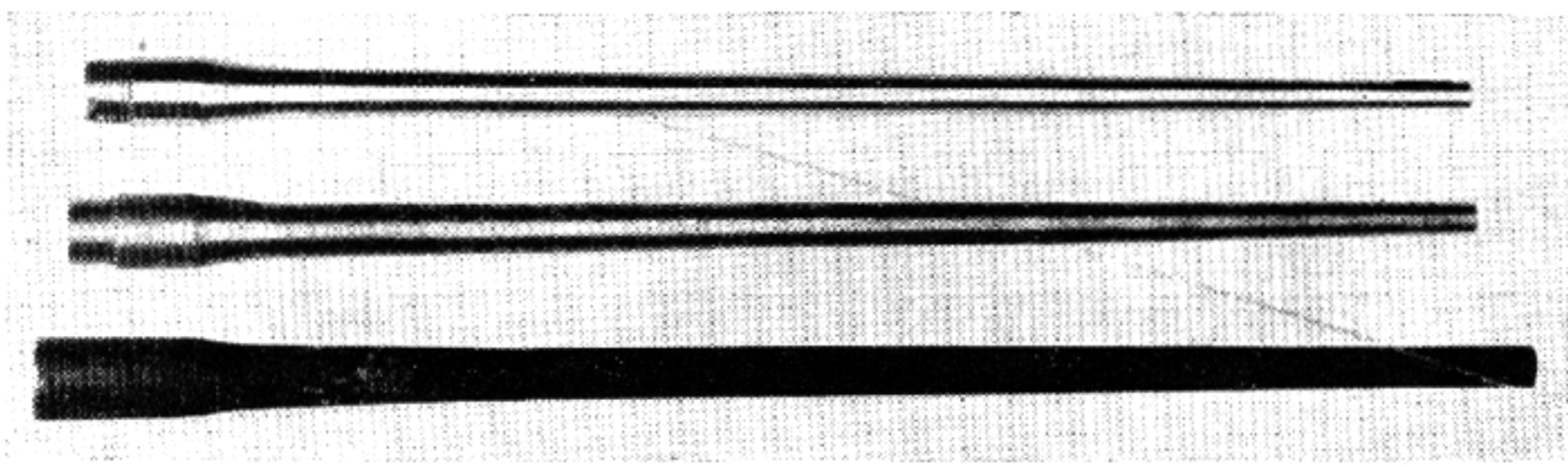

Fig. 81
Stages in the manufacture of a rifle barrel: blank, rough-turned and finished

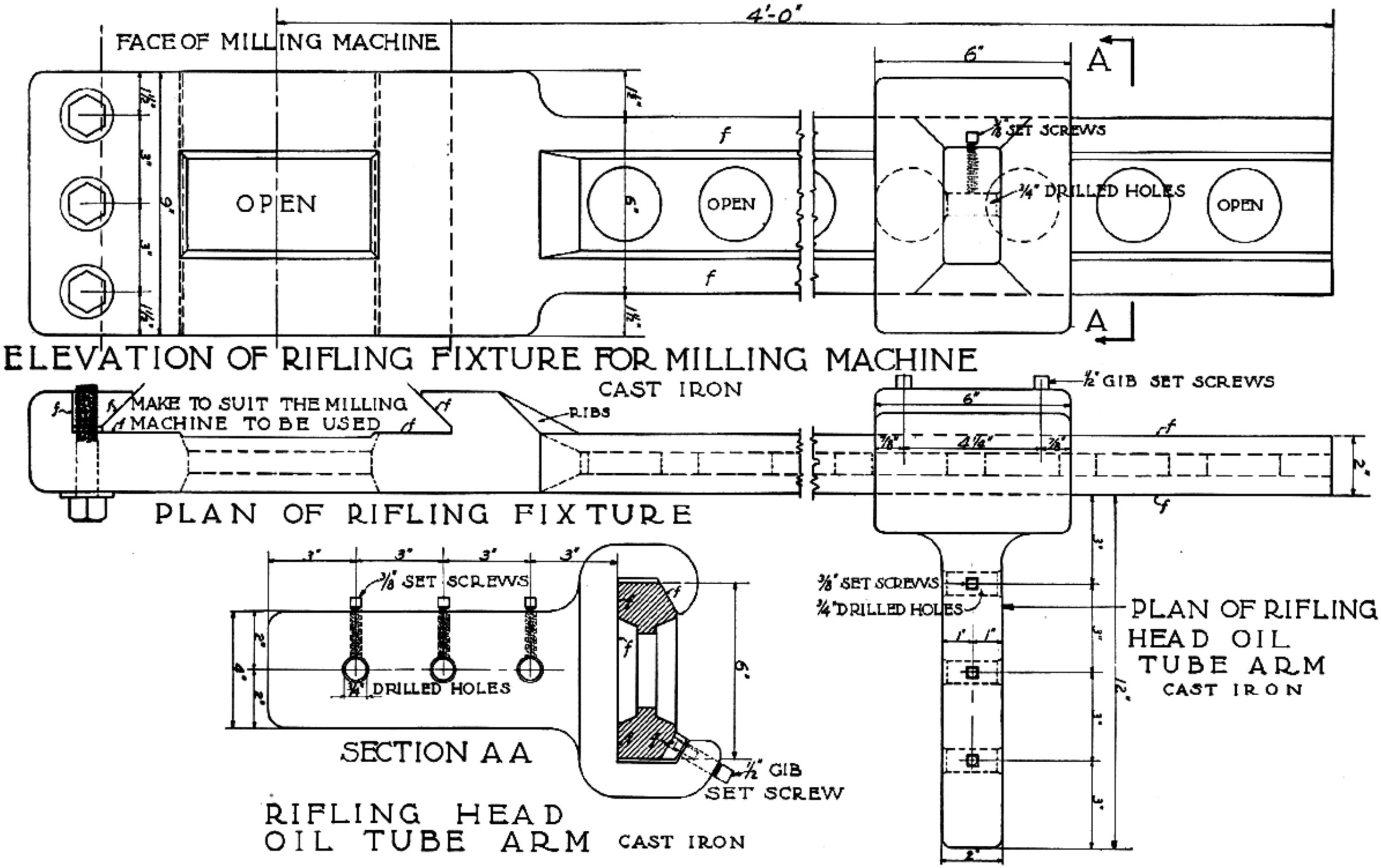

Fig. 82
Rifling-head fixture. When milling machine is to be employed for making barrels, fixture is clamped to face of machine

and another on the floor with a belt drive connected with suitable pulleys to the rear of the machine, and then to the lathe carriage. If a change is to be made to one turn in twelve inches, we must figure on a different drum for the lower drive. An index fixture should be made to clamp in the cross slide so that we can make any number of grooves we may desire. When selecting a milling machine it is wise to choose one with a long table travel and with the rifling arm in place on the face. We have the sliding arm which can be placed in any position and at the same time give the length of travel required to work the rifling head. The travel of the table and head governs the exact location. The arm which clamps the rifling head has three positions and we can use any one of them. It is then necessary to line up the exact center of the dividing head so that the oil tube will not bind in the barrel.

When this work is ended the next requirement is a rifling head, the completion and installation of which calls for patience and skill. Figure 66 shows a detailed drawing of a .30-caliber rifling head, and Figure 65 a detailed drawing of a rifling head for a .22 caliber, one of the most difficult heads to make; difficulty is also true of the scrape-cutter heads and heads with the complete number of cutters on the head itself as illustrated in Figures 69 and 70. Other calibers are made in different proportions, but the principle of the heads is about the same. As you can see, this is rather a difficult tool to construct, particularly the hook-cutter head, as there are so many small parts that make up the head with other little kinks that are difficult to put into a drawing comprehensibly. You should have the equipment to carry out the operations properly. I would advise securing these tools from a reliable source, for much depends on a rifling head that is correctly made and conducive to efficiency. Chapter IX is devoted to the making of these tools.

After the rifling head has been chosen, provide for a suitable oil tube and hose connections and fasten them to the oil tube. It is then connected to our source of oil supply on the milling machine—the oil pump. Clean out all of the old oil that was used in any of the milling operations, and use pure lard oil as in the drilling and reaming operation. Connect a bracket from the index head to the end of the barrel, allowing enough space so that adjusting screws will touch, but no more. Since there is no automatic ratchet or cutter release as on the Pratt & Whitney rifling machine, a small hollow adjusting screw is made; then where adjustment of the screws is required in the rifling, a slight turn is made on each revolution, which will be equivalent to just a "scraping" or removal of about .0001 inch on each pass through the grooves. This adjustment is only made once in one turn of the barrel, and this is done often enough so that the rifling head secures the correct depth of groove. Also a suitable arm should be made with a small section so it will release the rifling cutter where it passes through the barrel. If a hook cutter is used, this may be done with a small tool, but an automatic arrangement is better, the release of the cutter never being forgotten.

For example, suppose we wish to make a barrel with five grooves, a .375 caliber with one turn in fifteen inches. Right- or left-hand spiral on the milling machine is a matter of choice; however, the cutter is made so that the lands and grooves are the same width. Turn to the table of spirals in the *Machinery Hand-Book*, page 911, for a leed of one turn in fifteen inches, as given in the table. Place a 48 gear on the worm, 24 gear on stud, 24 gear on second stud, and a 32 gear on screw. This gives a leed of one turn in fifteen inches. As we wish to make five divisions we use any index plate, setting fingers at the top so that the spindle will likewise come there without chance of mistake. Eight turns of the crank are equal to one-eighth of the division. Chalk the chuck on each turn you make, so that it will come back to the same location; then double-check and be certain that you have turned the index the proper number of turns. A mistake means a broken rifling head. An oil pan to the rear of the barrel must be provided so that the oil will run back into the proper grooves on the milling-machine table, and not over the floor.

One of the simplest rifling cutters to make is the scrape-cutter rifling head illustrated in Figure 67. Such a cutter has a burnishing effect upon the groove as it removes a scraping cut in both directions. The cutter only has a direct wedge adjustment and the raise of the cutter must rely upon the wedge and spring of the cutter itself. This is the most simple to construct and at the same time the most practical for the beginner to use, as it works perfectly if everything else is equal. Keep the cutter well stoned and of the proper hardness so that it will hold its sharp burnishing edge.

With the set-up for a standard caliber, it would be more practical for the beginner to work upon sample pieces. The first ones should be short in length: they can be used for revolver barrels. From then on you will eliminate any faulty procedures through experience. The rifling of any barrel should be started from the chamber end; that is, the hook cutter should start the cut from that end; therefore, the barrel should be placed through the dividing head with the muzzle facing the arm.

Before the barrel is set in place a lathe dog is fastened to the barrel so that if it is ever found necessary to remove the barrel from the dividing head to check it before the completion of the cutting, it can be set back in the exact location. Consequently, a suitable form of stop must be devised on the back of the dividing head to be pushed out in position at the time of clamping the barrel in the chuck, and then removed at will when the barrel is removed.

Power is used to feed the rifling head through the barrel; by gearing it up to the fastest feed, a very satisfactory speed for the cutter can be maintained. After the cutter is released the reverse feed is used. You must be careful, when it requires the revolving of the barrel to the next groove, not to get confused regarding the number of turns that were made with the index crank, for a mistake here means a broken rifling head, and these are not easy tools to make.

The chips which come off a hook cutter are similar to shavings removed by a wood plane. If the chips are broken or in the form of little wires, it is a sign that the cutter is not working just right and hence must be removed and stoned, or the face ground until there is a perfectly sharp cutting edge stoned to a mirror polish with a fine Arkansas stone. A scrape cutter must always be kept to a perfect sharp edge; the chips removed with such a tool are very fine, similar to those removed with a small scraper. A continuous flow of pure lard oil should be maintained at all times, and when the cutter emerges from the end of the barrel all chips must be removed before the return of the head. This is done with a tooth-brush, but it is well to use your fingers at times to feel the nature of the chips the cutter is producing; and at the least sign of broken chips have a fine Arkansas oilstone handy to maintain the edge. The rifling head should be clamped in the arm so that the cutter is at the top and the wedge at the bottom, as Figure 83 illustrates.

The problem was placed before me some time ago, to make $\frac{5}{32}$-inch, $\frac{1}{8}$-inch, $\frac{3}{32}$-inch, $\frac{1}{16}$-inch barrels, 34 inches in length out of $1\frac{1}{2}$-inch diameter alloy steel; only in the above described manner was it possible to make the $\frac{1}{16}$-inch barrel, not to mention incidentals. The average person with toolmaking experience should complete the construction of a rifle barrel from the .22 caliber on up without great difficulty. Any extensive explanation of this subject would require a separate chapter.

The Rebored Barrel — The boring or removing

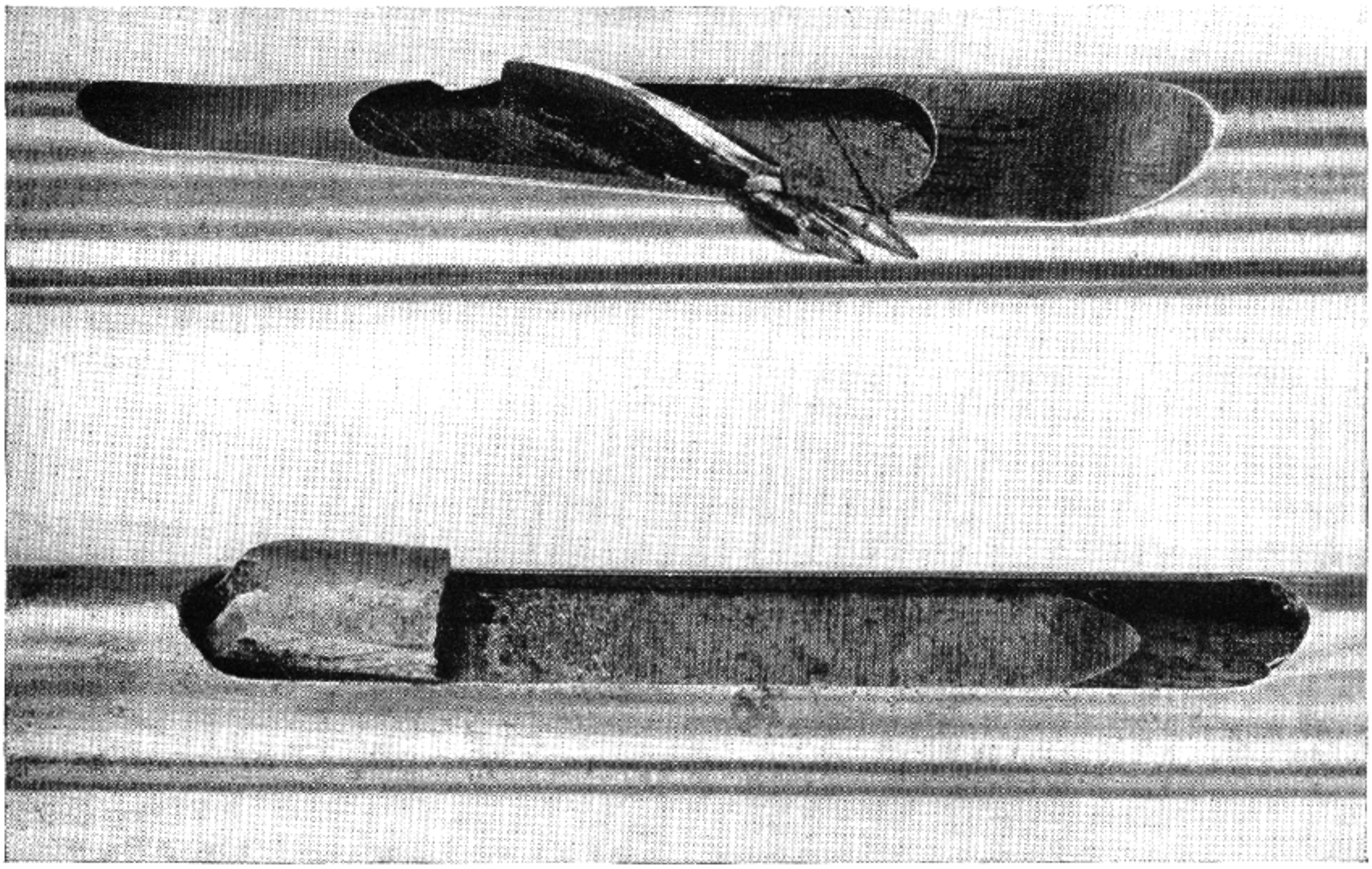

Fig. 83
Side views of scrape and hook cutters in the two standard rifling heads used at the Springfield Armory. Note the angle on the scrape cutter, which produces the best results. Correct hardening of this cutter is very important

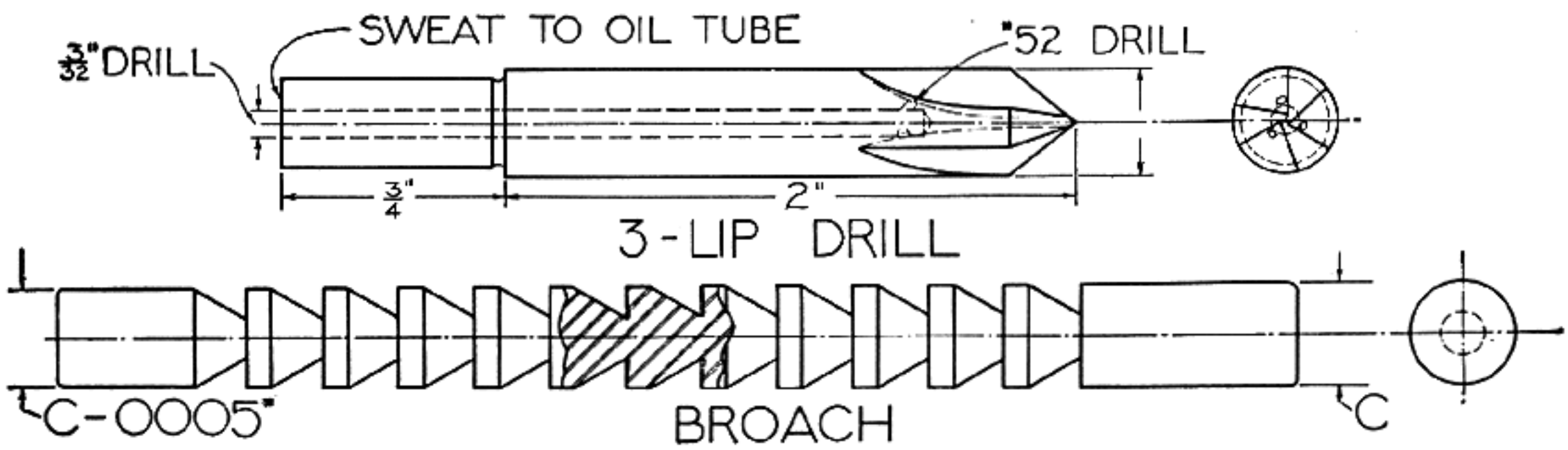

Fig. 84
Spear or three-lip barrel drill: used when rifle barrels are to be relined. Barrel broach: used for cleaning out lands of muzzle-loading rifles

of the old rifling from any barrel intended for a larger caliber can be done very easily by first counterboring the barrel with counterbores shown in Figure 63, or by drilling it out with a specially made three-lipped drill as Figure 84 illustrates. This drill is often referred to as a spear-shaped drill. Before it can be started into a barrel, a barrel counterbore must be used and then followed by the three-lipped drill in order to keep a perfectly straight bore throughout the drilling operation. Before any drilling takes place a bushing one inch in length made of barrel steel is sweated on the muzzle. Prior to this the muzzle is faced off square so that the bushing may find a perfect seat in the sweating operation. This end bushing is employed so that when the rifling head is passed out of the end it will not bell-mouth the muzzle. A hole is placed into the bushing slightly smaller than the bore of the barrel so that the drilling or counterboring operation will remove the inside material and the reaming operation will remove the balance of stock, and when finish-reamed the bushing will be a continuation of the bore.

After the drilling of the bore the barrel is straightened and then the reaming operation, which is the same as explained in Chapter X, takes place. The rifling of any rebored barrel is similar to the rifling of a new barrel as described in the first part of the chapter, and if those instructions are followed a perfect barrel will be produced.

The barrels which can be rebored to a larger caliber are in the following class: .22 caliber barrels on single-shot actions to be rebored to .25 caliber; .25 caliber barrels that have actions sufficiently strong to withstand the greater pressure to 7 mm.; caliber 6.5 mm. bored to 7 mm.; 7 mm. barrels to .30-30 or .30-06 caliber; .30-06 caliber on Springfield or Mauser action rebored to .35 Whelen. Even in such a list a great amount of good judgment must be used. One cannot expect to rebore a .22 caliber barrel which has been made from cold-drawn steel and expect good results in a .25-35 W. C. F. caliber; the only possible caliber that could be used is the .25 caliber Stevens with a lead bullet. The prevailing idea among owners of .22-caliber worn barrels is to convert them into a higher velocity arm and use jacketed bullets, which cannot be done successfully. Before any barrel is changed into another caliber the interested person should study all angles of the possibility of the change.

Many barrels have telescope bases mounted on the barrel with the screw holes drilled to a greater depth than really necessary; also deep slots cut in them for sights and forearm studs to hold the forearm in place. Too much care cannot be used when drilling a barrel of this nature so that the holes do not go into the enlarged bore or even weaken the barrel to such an extent that it would be impossible to secure any accuracy.

Chambers should also be taken into consideration. The accuracy of the rebored barrel depends upon correctness of the work performed, carefulness of the workman, and tools employed for the operation.

Heat-treatment of Barrels — Inasmuch as the automobile industry calls for better and finer steels in the construction of a motor car, other branches of industry must keep pace. The rifle barrel, however, has shown little improvement in this respect, for altho parts of the gun have been heat-treated, the barrel has been altogether neglected. A rifle barrel is no more difficult to heat-treat than a driving axle of an automobile, and a heat-treatment should be given both these to increase the toughness of the steel and prolong life and accuracy. I have not discussed the matter of the heat-treated barrel very thoroughly in Chapter VIII, for much cannot be said on the subject without a series of technicalities. However, by adding together the information given throughout the various chapters, the interested individual will be provided with enough

material to make this operation a success. Of course it is essential that he have the proper equipment at his disposal. Any of the various heat-treatments applied to rifle barrels may be reduced to a combination of the following elements: (a) heating at a definite temperature for a definite length of time, (b) cooling from this temperature at some desired degree, and (c) reheating if desired. The more complex treatments consist in the duplication of one or more of these elements together with changes in various temperatures, degrees of cooling, etc. These treatments will be considered under their proper designations: normalizing, annealing, toughening, or hardening and tempering.

The size and shape of a rifle barrel must be considered, and the bottom of the furnace that is used must be true and level. This is especially important for the large and tapered shape of the barrel. Among other essential points is the fact that the heating should not be forced, as the outside and taper would then be greatly overheated. If a number of barrels are heated at a time, they should be so arranged in the furnace as to insure as even heating as possible. Instead of laying barrels on the bottom of a furnace, fire-brick supports would be much better placed about three inches apart to allow the free passage of gases underneath the barrels.

The proper heat-treatment should be determined, as in the case of normalizing above the critical range by the properties desired, and should be governed by the size of the barrels and their carbon content. For maximum softness, the barrels are allowed to cool in the furnace. In the case of the full diameter of the bar of which the barrel is made, it may be removed from the furnace and cooled in the air. On the other hand, very small barrels of high carbon content with nickel and chromium, cool rapidly enough in the air to become quite tough, altho a tempering bath of oil has the greatest advantage for correct toughness of the metal.

Pack-hardening could be given barrels with low carbon content; and barrels heated just above the critical range, if packed in various materials, could be left about two hours for the correct surface hardness both to the interior and exterior of the barrel, and portions to be left uncarbonized could be given, for protection, a plating of coppering solution. Most of the companies manufacturing special grades of steel have worked out experimentally the heat-treatment necessary to bring out the most desirable physical properties of their particular steels. Upon purchasing, directions are given concerning the heat-treatments.

These instructions are not for the man who has a small shop and only small furnace equipment for attempting to work out the correct heat-treatment of rifle barrels, but for the larger companies who can carry each operation through after the proper steels are selected. However, in such work a metallurgist will be able to determine the correct-working barrel steel, and will give barrels the proper heat-treatment, also coating their interior with a special non-rusting alloy which will make a rifle barrel nearly perfect according to our present-day standards.

Lapping — On the subject of lapping the barrel, let us assume that we have a perfect bore to deal with, that our barrel-burnishing reamers made a mirror surface, that our rifling cutter held up and made a perfect groove, but that it is necessary to finish lapping the barrel to remove the fine wire burrs that have been raised from the rifling-head cutter. These must be eliminated and the only method is by properly lapping the barrel so that it will polish to the highest degree under the abrasives used.

First cast a pure lead lap in the barrel, wrapping the two grooves with cotton string so that it will just push through. Figure 85 shows the completed lapping rod. A cord is wrapped around the rod in the cannalures and the latter carefully pushed into the barrel until the jagged tip is about ¼ inch below the muzzle. The cotton string is to prevent the melted lead from running down the bore. Clamp the barrel in a vise and heat it with a blow torch to a light straw color in order to allow the lead to flow freely; when this method is followed, a full and perfect plug will be formed. The molten lead is poured into the barrel, held vertically in the vise, and should not extend beyond the end of the muzzle.

The lead will cool immediately, and the rod should then be pushed forward just far enough so that the plug may be examined; if it has overflowed at the muzzle, it should be trimmed to muzzle length with a sharp knife. A word of caution may here be given: never remove the lap from the bore until its work is finished. Assuming that the lap is a perfect one, apply a coat of oil and withdraw the plug to the opposite end, far enough to remove the cotton string, and coat it with fine optical emery and oil. To eliminate any possibility of error in a fine barrel, the best emery to use is optical emery of about No. 320-M grit. Also coat the inside of the unoccupied bore with oil through the opposite end. A stop is provided for both muzzle and barrel, insuring against accidental pushing or pulling out of the lapping plug. For

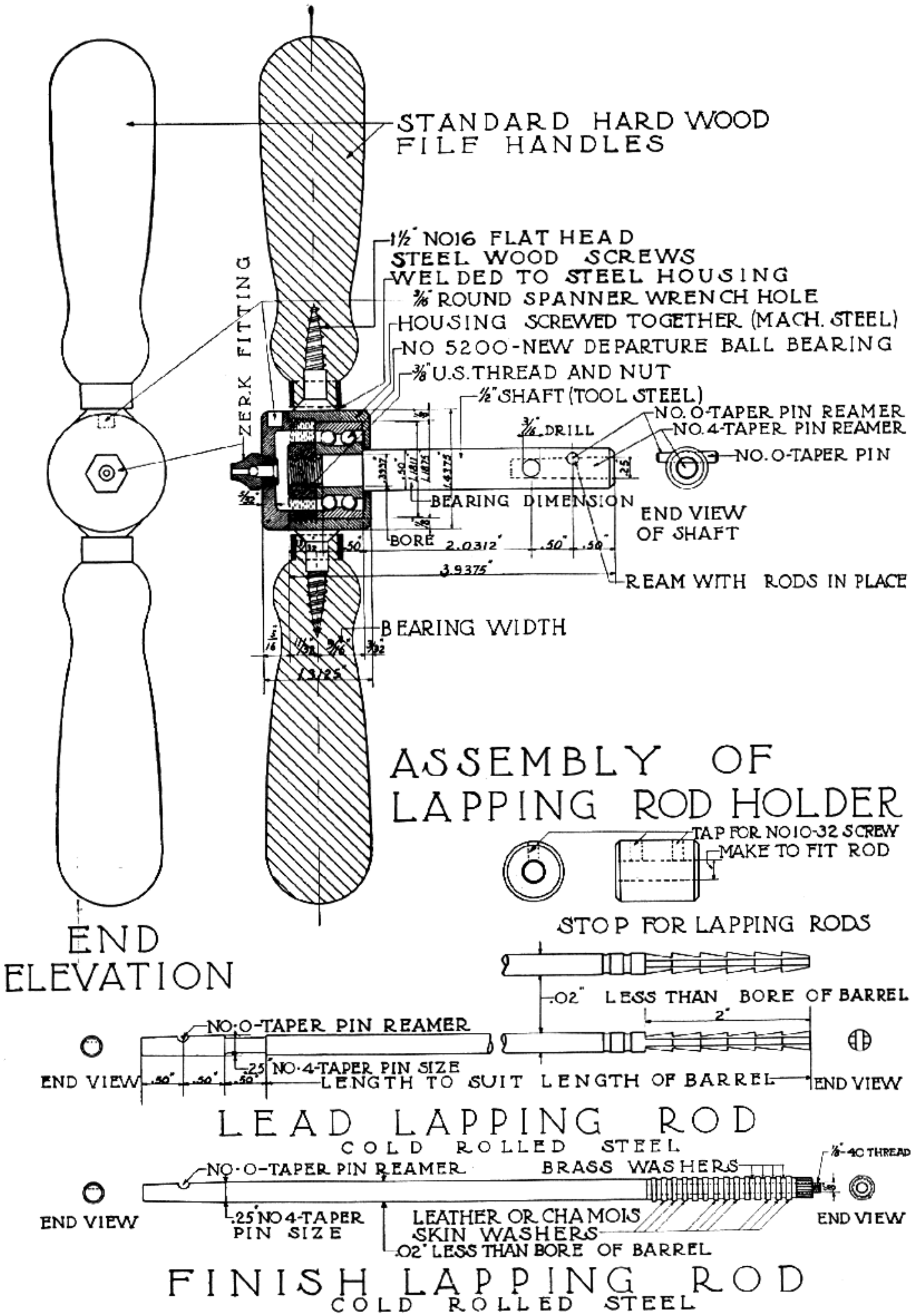

Fig. 85
Barrel lapping rod holder and rods for producing high finishes required in rifled gun barrels

five or ten minutes the plug should make its excursion from end to end of the bore, the abrasive and oil being added frequently. Now the barrel may be cleaned thoroughly with gasoline and patches, and examined.

Next, the polishing rod is inserted as illustrated in Figure 85. Such a rod is made with a series of chamois skin or thin leather discs with small brass space washers between, which may be tightened on the end by means of a nut and a pair of pliers. Turn about .001 inch to .005 inch above the groove diameter. As one portion of the nut is made the same size as the diameter of the bore, gently tap this through, allowing the land to cut its way into the chamois. Then mix olive oil and rouge and proceed further to lap the barrel for between one and two hours.

When this is completed, you have one of the finest polishes possible. Wipe out thoroughly with gasoline and apply a coat of fine gun oil. For further explanation on this subject refer to Chapter XVIII.

A great many more details could be given on the problem of rifling barrels, but it would involve a very technical explanation, and from the general outline given in this chapter the man with mechanical ability can perform the operation, as the subject is thoroughly illustrated. It will require a considerable amount of time, but in the end, if you are determined, you will win and be amply repaid by the satisfaction of having produced a barrel with a spiral in its interior surface. How it will look when viewed from the muzzle, Figure 52 will show.

Fig. 86
Showing how rifle barrels are lapped in the large arms plants

CHAPTER XII

Barrel Turning, Chambering, and Headspacing

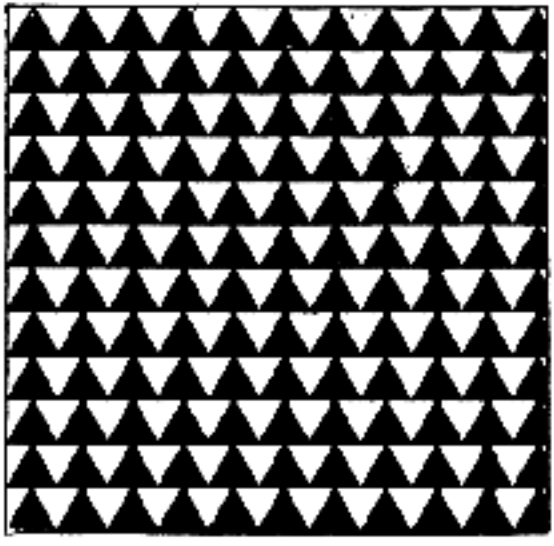

CHAPTER XII

Barrel Turning, Chambering, and Headspacing

AFTER the rifle barrel has passed through the drilling, reaming, and rifling operations, chambering follows. When barrels and actions are fitted, the student or gunsmith should be keenly alert and know just what he is doing. Barrel chambering and the correct headspace of a cartridge are among the most essential factors in a barrel; therefore, one who undertakes the fitting and chambering must be a person with considerable mechanical ability. I am assuming that the person who can make a barrel to this point has that ability.

To begin with, no novice should attempt this work without special instruction, for he is endangering not only his own life but that of others who may be in the immediate vicinity at the time the accident occurs. I can not stress too greatly the importance of a correctly fitted cartridge case in any chamber, together with a recess in the breech of the barrel free from any marks on the surface. Chambering consists of reaming out the breech end of the barrel with a set of fluted reamers known as chambering reamers, which enlarge the barrel at the breach so that a cartridge can be employed with the correct tolerance between the barrel and the cartridge selected.

A slowly revolving lathe is employed, and as the two first reamers are used, the burnishing and throating reamers are employed when the action is screwed into place to secure the correct headspace and bullet seat. These operations are done very gradually, with the roughing and second reamers forced in by the tail-stock center. After the first reamer is used, the second one finishes the chamber, allowing enough for headspace and the burnishing of the chamber. The barrel is then threaded and fitted to the receiver, and the chamber plug is employed to hold the threads concentric with the bore and chamber. The bore and chamber must also be in perfect alinement, and for this purpose floating pilots are used on the first and second reamers which project beyond the neck diameter. Finally, the burnishing reamer is run in to the exact depth, which will show on the head-space gauges, whether used on a bolt action or a breech block upon the individual rifle. The chambering reamers are illustrated in Figure 56 and the headspace gauges in Figure 71.

The threading of a barrel is connected with two other operations, chambering and headspacing. Rifle manufacturers have used different forms of threads on their barrels and actions. The Springfield, both in the 1898 and 1903 models, uses a 10-pitch square thread; this thread is the old form and has been superseded by the acme thread, which is much stronger. The advantages of the acme are its strength and the ease with which it can be cut compared with the square thread. This is due to greater strength of the teeth in both taps and dies, as well as to the facility with which the chips free themselves. The United States standard thread is used to a great extent on all standard arms manufactured, and is the most commonly used screw thread in this country. When merely the form of thread of the United States standard is referred to, but not the number of threads per inch corresponding to a certain diameter, the abbreviation U. S. F. (United States Form) is employed. The sides of the thread form an angle of 60 degrees with each other.

The Whitworth standard thread, also known as the British standard (B. S. W.), is used principally in Great Britain on most of their firearms. The Germans use the same form of thread as the United States standard system, except that they use the metric system of measurement. The same is employed by the French arms companies as well as the Swiss.

The threading of a barrel for the receiver or action must be cut so that when the threads are completed it is possible to pull the barrel tight and in line with the index line already marked or about to be established; it is then completely set in position with a good-sized wrench. The barrel should screw upon the receiver or action with some effort of the hand, to within about ¼ inch of meeting the index line and shoulder, and then require a heavy crescent wrench to screw it solid against the shoulder. The "index lines" are the two short, almost invisible lines, one cut into the receiver on the left or bottom side of a receiver, and the other cut into the barrel, meeting in perfect alinement when the barrel is screwed completely home into the receiver. The assurance of correct headspace and security of barrel and receiver are the most im-

portant reasons for seeing that the barrel is screwed exactly to an index line. If the front and rear sight bases have been previously mounted on the barrel, they should stand truly vertical when the index lines meet.

Milling Sight Bases — If the rear sight base is integral with the barrel and also the front ramp and sling-swivel base, the barrel must be set home with a large wrench. The next stage of the operation consists of laying out for the rib, ramp, and swivel base. Coat the barrel with the coppering solution at the points where the respective laying-out lines will come. All bolt-action receivers have a flat under-surface, and where the magazine bears against this surface it is always at right angles to the line of sight; this surface is clamped against an angle plate and set upon a large surface plate. A true center must be established at the muzzle and also at the rear opening of the receiver. The most satisfactory means of locating such centers is by turning soft plugs to fit into the barrel and receiver. If a height gauge is used for laying out the lines, fine centers are not required, but if a surface gauge is used a fine center must be inserted into one end of each plug as they are turned on the lathe in order to set the scriber point in the exact center. With the receiver, this is clamped upon the angle plate, and parallels are built up under the muzzle until both center lines on the plugs coincide. A center line is scribed from the receiver forward to the length of the intended leaf-sight base. A center line is also scribed at the muzzle for the ramp and one for the swivel base. By using a height gauge all lines can be laid out for width and scribed the entire length, but with the surface gauge they must first be established with a divider from the center. Having thus made all the layout lines and finely center-punched them, the barrel may be unscrewed from the receiver and the necessary machine operations made.

A milling machine is best employed with either a vertical head or the use of a straddle mill to cut down the sides of the rear-sight base and ramp. To make the required set-up on the milling machine, the barrel is clamped in the dividing head chuck and opposite end on the center. Barrel plugs are first inserted and a surface gauge is set to the exact center of the tail stock. After the barrel is held firmly in the chuck and center, the index crank is revolved until the center line of the barrel registers with the setting of the surface gauge, which will be at right angles to the milling cutter regardless of whether a vertical head is used with an end mill or a straddle mill. After one side of the rib is milled to the correct depth the index head is revolved 180 degrees and the opposite side is milled in similarly to the marked lines.

Having thus milled the leaf-sight rib on both sides, a six-inch straddle mill is next used. To mill the three-inch radius the correct distance ahead from the receiver to the desired depth, all the necessary measurements will be found in Figure 48. The surplus stock is milled with either an end mill or a straddle mill to a true cylindrical form by taking light cuts and setting the index crank to a number of holes on each pass of the cutter. This operation applies to the straight cylindrical portion ahead of the receiver. For the taper portion of the barrel ahead of the radius and to the end of the sight rib, the index head is set down a certain degree and the tail stock is also depressed. This angle can easily be figured out between the large and small diameter, and the index head set to the correct angle. The same operations that were employed for the straight cylindrical portions take place to mill this surplus material. With this surplus stock removed, the index head is again placed on center together with the tail stock, and two 60-degree angle cutters are used, one right- and one left-hand cutter placed together upon the arbor; thus the point of the rib is formed. After the rear end of the barrel is milled, it is reversed into the dividing head chuck and a similar operation is in order to mill the ramp. The same instructions may be followed as given for the rear-sight rib, except that there is more material to machine off than from the rear. The swivel base is milled while in place in the chuck, which is located on the under side; the same methods are employed.

After removing the barrel from the milling machine it is "struck." Chapter XV describes this procedure, and by following the instructions there, the barrel is completely finished with a high polish and screwed back again into the receiver in the same position as when it was removed. Set the surface gauge to the receiver line and then mark an index line on the barrel with a fine small chisel so that the barrel can be set up to this line at any time. With the barrel in place, the top surface of the rib is milled off either flush with the top of the receiver or a little below the top surface, according to opinion. The ramp is also milled to the correct height and the incline leading to the sight can be milled with a straight taper, or the large six-inch straddle mill may be used and a large radius milled on the face, a matter of individual taste. The sling-swivel base may be milled in any form which is most becoming to the general outlines of the barrel design.

When seating new barrels, a barrel vise should be constructed, such as shown in Figure 87, particu-

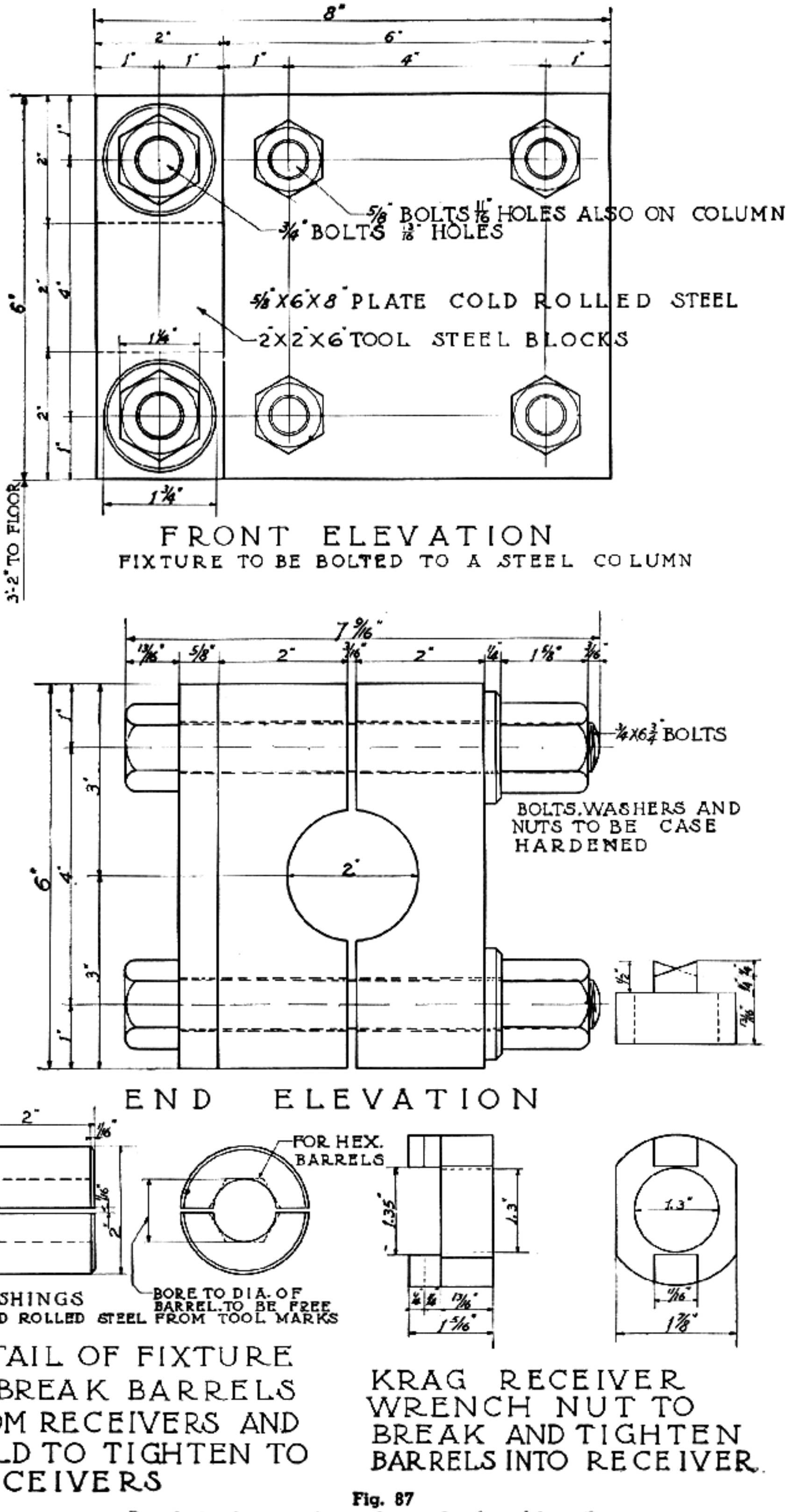

Fig. 87
Barrel vise for removing and screwing barrel in actions

larly for new barrels or barrels that screw on a receiver. Bushings may be made for any type or size of barrel. The blanks are cut off to length and rough-drilled in the center so that when used for a special-sized barrel it is only necessary to bore them out and split them on the milling machine. Such bushings are made from cold-drawn steel.

The two heavy vice blocks are made of tool steel and the center bored to receive the barrel bushings. Holes for two ¾ clamping bolts are drilled, a ½-inch plate is made, and the two vise blocks are set on one end with two ¾ holes in line. Four holes are drilled for draw-bolts and the vise is bolted firmly to some solid upright support where no vibration is possible—a roof-supporting beam, for instance. With a barrel vise of this nature and the barrel bushings highly polished on the inside, a finely blued barrel can be removed from any receiver, no matter how tight it may be, without any danger of turning to mar the finish. There are so many different and unreliable suggestions given to remove rifle barrels from receivers that the beginner must be wary, for they come from impractical men or men who have happened to experiment with a loose barrel. These barrel vises are rather expensive to make, but once made, pay for themselves many times over.

Be extremely careful to avoid marring, crushing, bending, or springing a receiver. If it is of a shape which cannot be gripped with a large wrench, use a piece of heavy sheet tin between the jaws. A piece of ¾-inch copper should be employed having the contour of the receiver shaped out on one side. When removing barrels from receivers always set the bolt in, but not in a locked position. This is done so that the receiver will not be crushed at that point, a frequent occurrence when the bolt is not in place, particularly if it is very difficult to break the barrel loose. Figure 87 illustrates a bushing with two prongs on it to place in the recess underneath the action of a Krag receiver. The prongs are made to the exact shape of this cut-out, and by boring out the center of the bushing to slip over the receiver the one prong engages the recess. By placing the barrel in a one-inch bushing in the vise, with this clamp in place over the receiver and the prong in the recess, the tightest Krag barrel can be broken from the action with ease.

Two wrenches may be employed for breaking barrels; the most suitable is a 14- or 16-inch crescent, and for second choice, a 24-inch monkey-wrench. Both are inexpensive wrenches, and when a barrel is set home with one of these and clamped in the vise illustrated, no one will ever remove it with some of the foolish suggestions we so often read of.

If a barrel is fitted according to instructions, there is no need of spotting in the shoulders with Prussian blue for a perfect bearing, unless barrels with two bearing surfaces, similar to those of a Mauser, are being fitted. A receiver pulled up very tightly upon a single shoulder imbeds itself into this, regardless of whether it is an even or uneven surface, for the great pressure exerted on a shoulder by the end of the irregular face of a receiver will form its own seat in the metal and make a perfect contact.

Chambering — The chambering of a rifle barrel is an operation that many students undertake; if they are going to do this work thoroughly, a complete understanding of these chapters must be had. The correct chambering of a rifle barrel depends principally upon safety. Then follows its accuracy, its length of life, and its efficiency in the free extraction of fired cartridge cases.

If the student should make some mistakes in the construction of the tools, ream out the bullet seat too far ahead, or make some other slip in workmanship, the barrel, even tho other parts are perfect, will never produce the results in accuracy expected. The most important point to remember is that it may maim or kill the person who fires it. Chambering is an operation connected with the threading of the barrel and gauging for headspace; therefore these three operations are considered together.

Let us suppose that we have the barrel completed. The next stage of the operation is to chamber it. To do this, make a complete set of chambering reamers, as described in Chapter IX, Figure 56. The field of calibers to choose from is large, but because of its popularity in this country and for sake of experiment, let us consider the .30-06 United States Government cartridge. We will use the latter set of reamers for an experimental operation on a barrel that we may have made. Our first reamer is the roughing reamer, which we place in the rear end of the barrel, or the end where the rifling head came through, as this end is always the largest. First, we make sure that our stops are set in the proper position and are certain that we have used the barrel plug which is shown in Figure 51 to turn true with the bore.

Threading and Fitting Barrels — It is often necessary to cut off one or two threads from an old barrel and rethread it for another action, which, of course, necessitates rechambering. It has been suggested to shrink a sleeve over a barrel at the chamber end; such work is satisfactory on caliber .22 rifles, but on high-velocity arms—never! Oc-

casionally a barrel can be found in the .22 caliber class on which it is necessary to turn the thread off a barrel and shrink or solder on a sleeve and then cut a new thread to fit the action selected. All such work is very simple, but when fitting a barrel to an action, the threads must be cut so that they fit very tightly, and the receiver turned on by hand with little effort.

After turning the barrel and threading, we know that it must be absolutely true with the axis of the bore. This operation may be done either by chambering or threading the barrel first. It does not matter in either case, for in using the proper set of reamers, the barrel is chucked until it runs absolutely true; and then from the barrel plug, which has been left in, the steady rest is set and reamer No. 1 is used—the roughing reamer—with stops set for the proper depth. Next is the finishing reamer No. 2; and finally reamer No. 3, which is the burnishing reamer. The burnishing reamer must be used when the barrel is screwed to the receiver to get the proper headspace of the cartridge unless it is a rimmed case. As all the rimmed cartridges have only a clearance for the neck, this form of chamber can be finished in the lathe, but all those for rimless cartridges that require headspace must be finished when the receiver and action are screwed together. Figure 71 shows two different styles of headspace gauges; one has a series of buttons which measure from the shoulder to the end of the bolt, 0.001; we always chamber to the minimum size, which is the smallest button in the set. If a tolerance is to be used, 0.004 inch is the proper space to work in. The next operation is the throating of the barrel or reaming of the bullet seat. This is determined best by inserting a cartridge in the chamber that has the proper length of bullet projection from the end of the case, so that the lands of the rifling will show plainly on the bullet. As a matter of fact, this is only used in barrels intended for target work; if the rifle is to be used for hunting purposes, reinsert the reamer and take out a little more so that you can barely see the marks on the bullet.

In the making of chambering reamers and gauges that are required for this operation a considerable amount of tool-making experience is required. A separate chapter is devoted to this subject, but a brief outline is in order here. Lengths and diameters must be held within a very close tolerance and the stoning of the reamers requires much skill to face their cutting edges properly. Always remember, when cutting the flutes on the milling machine, to set the angle cutter .010 ahead of center. This will eliminate a considerable amount of chatter, providing they are properly stoned. In stoning the reamers, they should have just enough clearance so that they will cut freely and not have the clearance you see ground on a reamer that has been purchased, such as the standard hand reamer, machine reamer or taper-pin reamer.

The roughing reamer may be used in the drill chuck set in the tail stock of the lathe, but the second roughing and finishing reamer must be reamed out by hand. This is easily done by putting the center on the reamer, moving the carriage out of the way, and using a tap wrench. As the reamer cuts in, take up on the tail-stock center until the desired depth is reached. Always remember to use plenty of oil and withdraw the reamer to free any chips that have collected.

The first consideration to be taken up in detail is that of the chamber design—its diameter and form with reference to the cartridge to be selected. The dimension and shape of the chamber must be based on the figures and form of a loaded cartridge; therefore, figures must be taken to give the proper tolerance between cartridge and chamber which will conform to good engineering practise. No cartridges are made absolutely uniform, but they are manufactured with a maximum and minimum tolerance. However, the system of inspection at the cartridge factories is very exacting; no cartridge will be produced smaller than the minimum measurements, and for maximum sizes they are checked by a machine. The chamber must be reamed to fit and operate safely with a cartridge made either to maximum or minimum size. To do this, it is necessary that the reamers be made just large enough so that when a chamber is reamed it will work successfully and safely with a maximum case, but no larger, for in that case it will be unsafe with a minimum cartridge. This establishes the correct size and form of a chamber within very close limits.

When you start to chamber a barrel which has been drilled, reamed, and rifled, use a series of four reamers graduated in diameters, so that each succeeding one after the roughing reamer takes but a scraping cut, slowly and gradually enlarging the chamber to the desired size and shape. These are used by hand, but in large arms factories the chambering of a rifle barrel is done on a turret lathe. It is a principle of reaming that a reamer turned by hand, if not forced unduly, will ream out a hole exactly in line with the axis of the bore. To assist this and have it come in perfect alinement the first two reamers are provided with a pilot together with the throating reamer. A pilot, made of either steel —hardened and lapped—or brass, rides on top of the lands and acts as a guide in front of a reamer. The reamers are also provided with stops which are illustrated in Figure 56 together with the pilots.

The finishing or burnishing reamer is not constructed with a pilot, for this reamer removes no more than .002 inch. The bullet seat is that portion of the chamber ahead of the mouth of the case into which the bullet rest projects from the case. It should be cut with the throating reamer just so the bullet will rest upon the lands. The best accuracy is obtained when the bullet is assembled into the case and there is a portion of the cylindrical maximum diameter of the bullet projecting beyond the mouth of the case and fitting with almost a push fit into the cylindrical portion of the bullet seat. Then the bullet seat straightens the bullet so that its axis is in line with the axis of the bore, and when the movement of the bullet takes place it glides straight forward into the bore, and the rifling is cut into its cylindrical surface without any "jump" which may tend to deform it.

That portion of the chamber corresponding to the neck of the case should be slightly longer than measurements taken. An allowance of 0.030 inch is sufficient at the top of the 45-degree angle; this allowance in the chamber ahead of the mouth of the case is for expansion and the 45-degree angle is made so that small brass rings will not be cut off the mouth of the case. Cases lengthen considerably when fired, particularly those which have been reloaded a number of times, and allowance in the chamber must be made at that point, or it will actually crimp in the case, just as a reloading die does, and result in inaccurate shooting.

Headspace — After placing so much stress upon the foregoing operations a complete explanation must be given of the very important subject—"headspace." It is obvious to all users of firearms that the chamber must hold the cartridge back against the face of the bolt, thus supporting the cartridge and primer firmly against the bolt's face when the explosion takes place. Figure 71 illustrates two standard headspace gauges together with a chamber showing a headspace gauge in place. When a rimmed cartridge is used, the headspace is the distance the rim of the case extends from the face of the barrel to the face of the bolt and also the distance from the shoulder to the face of the bolt; the latter distance, however, must be a clearance, which can be in most cases between 0.010 and 0.015 inch. Headspace is usually taken care of by the recess in the end of the bolt, except in the case of rimmed cartridges used in single-shot rifles, and the use of center-fire cartridges. The counterbored recess must be deep enough so that a rimmed case can be inserted in the chamber and the breech block closed. No tolerance should be allowed; this distance of headspace is cut carefully and gradually with the counterbore after the barrel and breech block have been assembled to the action with constant trying of a headspace gauge or a cartridge known to have a maximum thickness of the head. The headspace between the face of the barrel and the counterbored face of the bolt in high velocity arms has been provided for by the makers of the actions. The headspacing of such chambers is only a matter of finding the proper clearance between the shoulder and face of the bolt; this is usually done with loaded ammunition until it will just go in the chamber without any indications of a bearing upon their shoulder. The finishing reamer is run in until the bolt will barely close without undue effort on the bolt handle. The reamer is placed in the chamber again and enough metal removed to allow sufficient clearance to take care of all maximum cartridges. The exact sizes of the finishing reamer assures that the shoulder and neck of the chamber will be at the correct distance ahead of the removed seat and that all portions of the chamber will have the correct diameters. (Refer to Figure 88.)

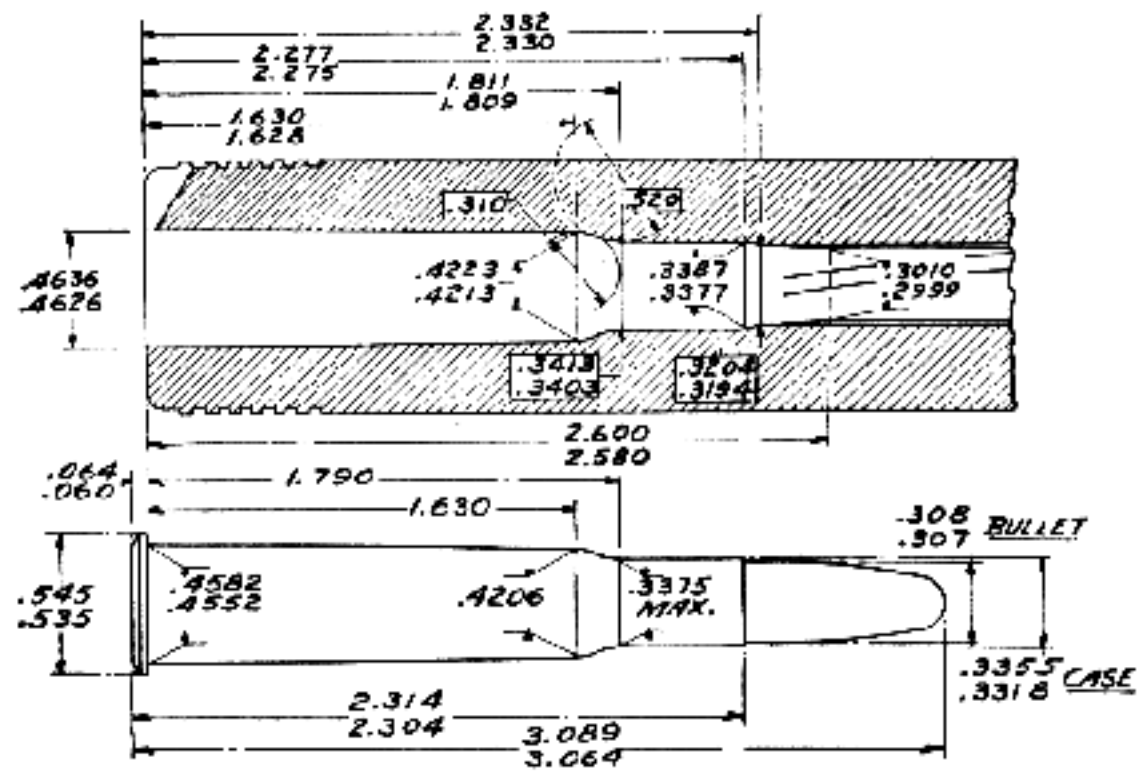

Fig. 88
Caliber .30 Model 1898 rifle chamber and caliber .30 Model 1898 cartridge

When headspacing a chamber for a rimless cartridge, greater care and forethought must be used; this operation is more important because as a rule a rimless rifle cartridge is employed with a much higher breech pressure than that of a rimmed cartridge. On a rimless case the distance between the shoulder on the chamber, just in the rear of the neck, holds the head of the cartridge back tight against the head of the locked bolt and supports the case when the explosion occurs, at the same time holding the primer in its pocket. A simple definition of headspace is: the distance between the angle on the shoulder of the case against the angle on the shoulder in the chamber to the face of the bolt. In the construction of either style headspace gauge, shown in Figure 71, for a rimless case, a selection is

made of the finest type of gauge which can be used for this operation. If it is not possible to construct these gauges, minimum length cartridges must be selected. If a number of barrels are to be made, a headspace gauge of the micrometer type which will give the correct figures for a minimum headspace to all chambers should be secured or made for this purpose. The button type of gauge is the standard inspection gauge used at the Frankford Arsenal. This gauge is more difficult to make than the micrometer type, but the advantage of the solid buttons is that they are positive, whereas the fine-pitch screw in the micrometer gauge can become worn and even sprung when too great a pressure is exerted upon the bolt in the act of closing. For this reason great care must be given to a micrometer gauge, and only the hardest pressure placed upon it when it is at its minimum setting, which is together. A master should be provided with each gauge for checking purposes; this is also illustrated in Figure 71. Without such a gauge it is difficult to check the gauges and cartridges when a doubtful situation arises.

The minimum headspace for the caliber .30 Model 1903 rifle is known as the 0.045-inch button or the 0.044 button, to be used for a very tight headspace. The 0.049-inch button is the maximum; however, on the micrometer at the minimum point it would be 1.944, or when the zero lines coincide each graduation on the thimble and barrel represents 0.001 inch, which is the same as a standard micrometer. In the use of either gauge, the length is from a point figured from the top of the angle to the face of the bolt. The bolts of all rifles using rimless cases, military or sporting, should just close on a minimum gauge. To determine a minimum length of cartridge for and of the chambers illustrated in Figures 57 and 58, a master gauge must first be made with a finished chamber reamer, allowing enough length for the end to be faced off after a minimum cartridge has been found. Select a number of cartridges of the one intended, place them in the gauge, and measure down to the head with a depth micrometer. Select the minimum cartridge which measures the deepest down from the face, then face the gauge off the top to 0.004 inch above the minimum size found. This gauge will be a maximum length of cartridge and should be marked accordingly. If there is to be a standard and a number of check-ups to be made from such a master, it is always best to harden it and grind the face to the proper length.

After the master is completed, a headspace gauge of either type shown in Figure 71 is made. With such precautions a headspace is assuredly correct for any cartridge selected. If the student only has one barrel to fit he may be able to accomplish the desired results with the use of loaded cartridges as gauges. Secure a number of cartridges of the different manufacturers of the caliber desired. Select from these lots, by given trials in a new rifle of the standard make, two cartridges which appear to be the shortest and longest. It will be impossible to determine or measure their length from shoulder to head, but you should be able to tell by the way they feel and act when they go in the standard rifle and the bolt closes on them. Use one of these for the "Go" gauge and the other for the "No Go" gauge.

Student gunsmiths, and in fact all riflemen, should treat the ready threaded and chambered barrel with suspicion, especially if it comes from unknown sources. Those coming from standard arms plants are usually interchangeable, except when fitted to an action which has had some set-back. This condition is revealed by an examination of the bolt-lug seat in the receiver after the barrel is removed. If it shows a very large indentation, a new receiver should be purchased, for it will become worse as time goes on until headspace is so great that ruptured cases will be the result.

It is also extremely important that only a bolt intended for a rifle be used in that arm. Considerable trouble and some very serious accidents have occurred because of changing bolts. For example, the bolts for most high-velocity bolt-action rifles and also many .22-caliber bolt-action rifles will seem to the inexperienced person to exchange very nicely. The bolt of any rifle will fit into any other rifle of that particular make; thus the beginner is under the impression that everything is all right. But the use of that bolt in just the wrong rifle will give poor accuracy (particularly in .22-caliber rifles) or it may cause the cartridge case to separate in two, about ½ inch in front of the head, leaving the forward portion of the case wedged in the chamber. Or, if the case should be a little overloaded and have a soft head from too much annealing in the furnace at the cartridge plant, the head of the shell may give way, permitting gas to escape to the rear, completely demolishing the receiver and perhaps seriously injuring the user. The possibility of such an accident is sufficient reason why one should use every precaution for the sake of safety alone. Modern military or bolt-action receivers made by private companies have their actions made from properly heat-treated alloy steel, are designed to stand a breech pressure of 52,000 pounds per square inch, and will withstand an accidental pressure up to 100,000 pounds per square inch, provided the cartridge case will hold and the headspace is at its minimum length. It is very seldom that a cartridge case is found with a soft head in the

product of our standard cartridge manufacturers.

While the danger of excessive headspace has been emphasized, I do not wish the reader to suppose that a great number of rifles are unsafe. Headspace is very important from the standpoint of safety, but the test is very simple, taking not more than a minute to perform if one has the proper gauges. Our large arms plants and also many of the smaller reliable firms turn out barrels which are properly headspaced; such arms are absolutely safe if used with any standard cartridge of the proper caliber made by any of our large cartridge companies or by the government arsenals; or with hand-loaded ammunition recommended by the powder companies or handbooks upon that subject.

We must speak of short headspace because that also is likely to occur, altho it is not accompanied by such grave consequences as excessive headspace. If we have too short a headspace, then the breech block or bolt will fail to close down on the cartridge. It may close down on cartridges of one make but not on those of another. The chamber is just too short; consequently a finished chamber reamer must be run in a little deeper, or a shorter bolt be selected. At times the user of a rifle, if he is using hand-loaded ammunition, may experience trouble due to the stretching of fired cases. The fired cartridge cases one loads may have stretched too long for that chamber—often the case in lever-action arms. These actions do not have the bolts locked at the front, and since they are made of heat-treated alloy steel, have considerable spring or give to them; cartridge cases fired in them lengthen so greatly that they cannot be resized to fit again easily into the chamber in which they have been fired.

I have probably not explained some of these subjects in a manner which can be understood by a person who is just beginning such work, but the trained mechanic will be quick to comprehend the meaning and will proceed to carry out the work in a highly technical manner, thus opening up new fields of experimental work never before dreamed of by him. If you are to construct a rifle of your own, carrying out ideas in good engineering practise, I feel confident that there will be very little trouble experienced in the construction of the barrels and the necessary tool layouts. The drawings are as complete as it was possible to make them and will enable you to figure out designs of tools which would require months of hard work on the drafting board. Do not try to change some of these until you understand the subject thoroughly. You may have excellent views, of course; if so, continue to experiment, or get some one with the necessary experience to create experimental designs. From these, greater results may be developed, and the knowledge gained will not be thrown to the four winds; it will help you understand the proper designs of barrels and cartridges, a branch of knowledge that leads into the study of ballistics and is not acquired through book learning alone.

CHAPTER XIII

The .22 Caliber Hornet: Design and Conversion

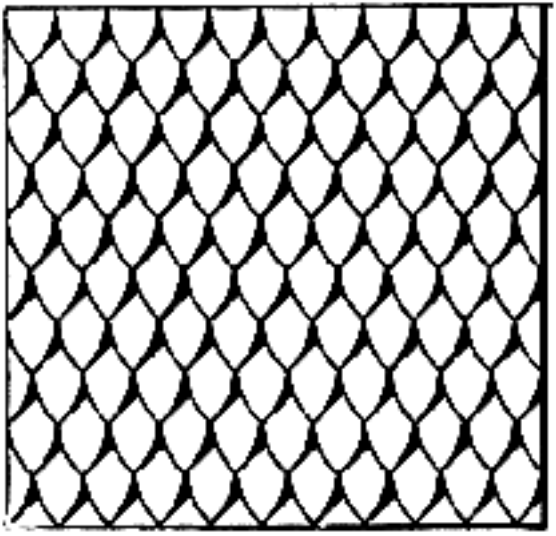

CHAPTER XIII

The .22-Caliber Hornet: Design and Conversion

THE design and construction of any rifle calls for certain basic principles, particularly in the American small arms; but ever since the old Winchester .22 W. C. F., or Winchester single-shot cartridge was given a 45-grain jacketed bullet and rechristened the "Hornet" every kind of old action has been resurrected to be converted into a .22-caliber Hornet rifle. All principles of design have been laid aside and the student of gunology has at last brought out his own basic principles reaching far beyond any gun designer's sense of responsibility. The amateur gunsmith has dug out of the past some very interesting old actions to be converted to take the popular cartridge for small game such as woodchuck, crow, squirrel, etc., and even for target shooting.

There are a number of old single-shot actions capable of handling this cartridge, and then again there are certain safety factors that must be taken into consideration in conversion. Some of the old single-shot rifle action frames, made only of cast iron, are not safe to use with the high pressure developed by a Hornet cartridge, for the reason that cast iron only has a tensile strength of a little better than 16,000 pounds per square inch; therefore, actions made from cold-drawn steel must be case-hardened and given the required strength of better than 60,000 pounds per square inch. In the selection of old actions we have the single-shot Winchester, Stevens 44½ action, Farquahrson, Remington, Winchester, Martini, Ballard, Hepburn, and certain Swiss and German actions. Of the single-shot actions, in my opinion, we have two of the best in the Winchester single-shot and the Farquahrson actions made by Westley Richards. The old Winchester was the type of action originally made for this cartridge, with ammunition popular at that time, such as the .32-40, .38-55, .40-90, etc.

The conversion and building up of one of these Hornet rifles becomes as interesting as the remodeling of a military rifle, except that barrels must be provided which are more expensive than might be anticipated. When a .22-caliber Springfield barrel, however, can be purchased and fitted to the action by the student and then chambered also by himself, the expense is brought down to a minimum. If a new barrel is necessary it is much more reasonable to send the action to the Niedner Rifle Corporation of Dowagiac, Michigan, and have them fit and chamber it, than to try to do it yourself. You may do the other necessary work, such as making the new stock and forearm and sights.

In order to explain methods of converting various actions into a Hornet rifle I must vary my points of interest to parts of the actions, barrels, sights, etc.

Barrel — Only one standard barrel steel is suitable for this rifle, and that is ordnance steel as used in the Springfield .22-caliber barrels and also in the products of the Winchester Repeating Arms Company and the Niedner Rifle Corporation. Extensive tests have proved that it is one of the best steels for high-power rifle barrels or even the .22-caliber long rifle cartridge. It is almost exclusively used by the British rifle makers for all their rifle barrels and for many other purposes. This type of steel is a little more difficult to machine than the common cold-drawn or higher carbon steels, and a slight change in tools is often required, with stoning or grinding to complete the operation. It has a very high tensile strength, excellent wearing qualities, and more resistance to corrosion than the ordinary low-carbon steel used in most of the cheaper arms. From an entirely practical point of view it has been demonstrated by government tests that nickel and ordnance steels are the best to use in the manufacture of any type of rifle barrel, tho most riflemen are not aware of their remarkable qualities. The more experienced riflemen having rifles made from these steels have noticed this established fact long ago; it has manifested itself by less wear and a brighter appearance of the interior after long and hard use. Barrels made from carbon steel have not shown such satisfactory results, even tho they were given less use.

So many enthusiastic owners of .22-caliber long or long rifles who are planning or desiring the change to the Hornet cartridge often overlook the steel the barrel is composed of, and the twist of rifling. This is a vital point, and all owners should understand that not every .22-caliber rifle or barrel can be made to use this cartridge. The interior measurements of a .22-caliber long rifle cartridge are given in Chapter IX.

The old .22-caliber W. C. F. barrels were mostly hexagonal in form and between 26 and 30 inches in length. They were mostly made of cold-drawn steel, but since the original bullet was only made of lead they were perfectly satisfactory, for they were a straight taper from breech to muzzle in the hexagon form. Today, however, we must consider the outside dimensions and weight of a round barrel to form graceful outlines from the action to the muzzle; a Hornet barrel should have a certain weight to bring the rifle in better balance, especially when using one of the single-shot actions. One point which need not be taken into consideration is the minimum thickness of barrel to insure against rupture, bulging, or bursting, for in using a Hornet cartridge, just as long as the breech is of sufficient thickness and of the proper steel, there is no danger.

Since all things are equal, no doubt the heavier the barrel, the greater will be the accuracy. Length of barrel must be considered for proper handling and sight radius. There are many factors which should be well weighed in the final decision.

In the design of a Hornet barrel, particularly one that is made specially, we must consider the ultimate weight of the rifle and its correct balance. In a hunting rifle we desire a barrel in this class either light or heavy; in the latter we must select one which is not extreme, as on a modern free rifle in the target class, but one that is consistent with good holding and well in balance when a telescope is used. Figure 89 illustrates a barrel fitted to a Farquahrson action by Westley Richards. The barrel measures 1.15 inches at the breech, 0.680 inch at the muzzle, and the length is 26 inches. The taper is continuous from the muzzle within 1½ inches of the breech; this small straight portion was left for the mounting of a telescope block. The taper is so gradual that the front block was only 3/32 inch higher than the rear when placed 7.2 inches between centers. On this particular rifle a Fecker telescope was used, which was the only sight provided for, as it was to be used solely for groundhog shooting. The barrel weight and proportions of the stock made a fine combination heavy rifle of the extreme limit in the heavyweight class. Still, we may desire as light a weight as is consistent with accuracy. Figure 97, Volume I, illustrates a Hornet rifle made on the Farquahrson by Westley Richards; it is a fine example of the gunmaker's art and has perfect balance of barrel and stock. The barrel length and diameter of this rifle are: diameter at breech 1.1 inches, at muzzle .56 inch, and length 25 inches, with a gradual taper from muzzle to breech. The stock and forearm are made from French walnut with graceful outlines and perfect fitting of the metal parts.

Generally speaking, the only alternative the amateur has in constructing his ideal Hornet rifle is to secure a .22-caliber Springfield barrel and fit

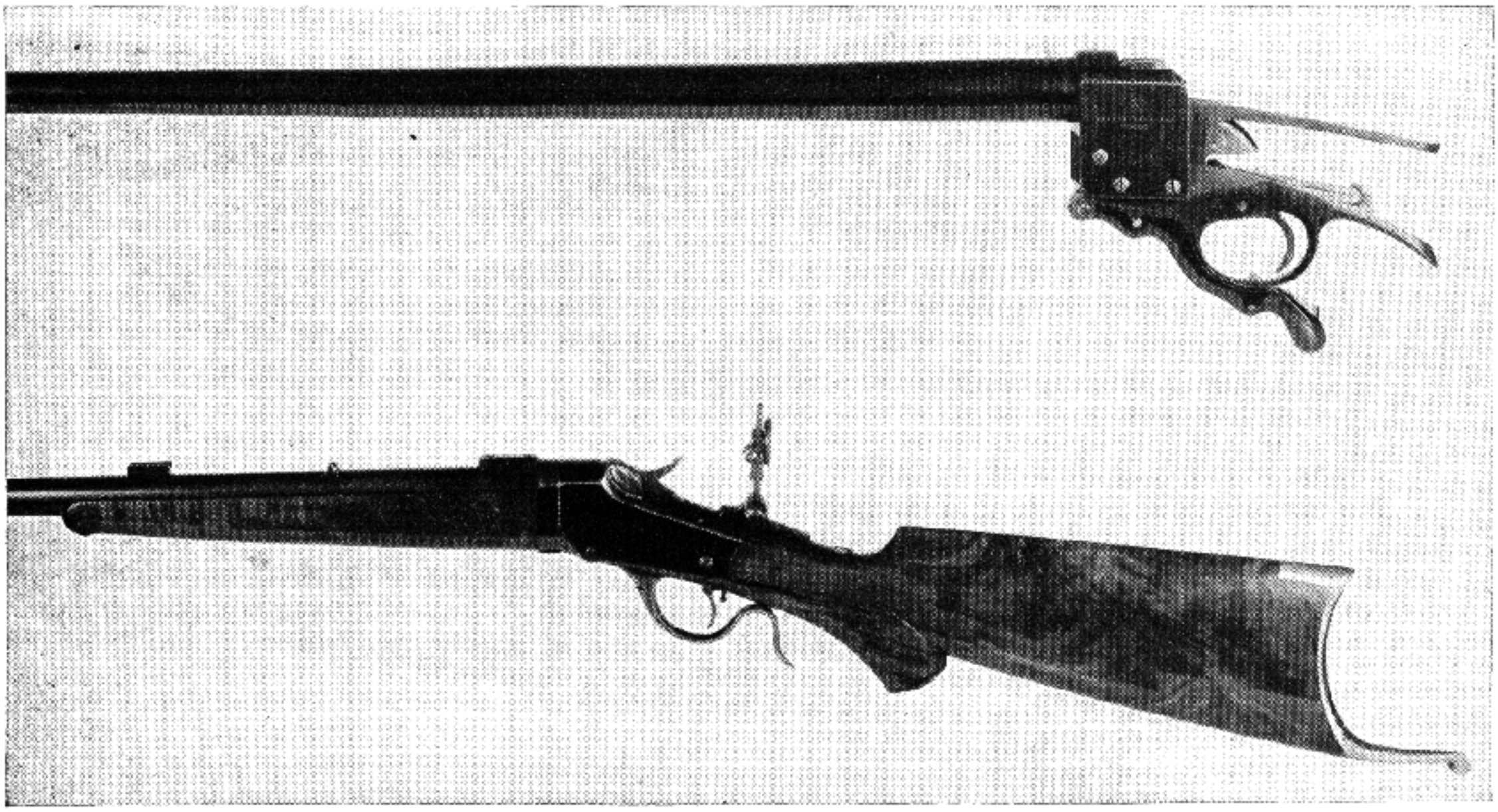

Fig. 89
Top: Caliber .22 "Hornet" barrel on Farquahrson action made by Westley Richards. Bottom: Special barrel made on single-shot Winchester action for "Hornet" cartridge

it to any of the actions named in the first part of the chapter. The Stevens actions are the smallest; therefore it is advisable to turn down the breech slightly smaller than the action in order to fit the new forearm. If Springfield barrels are fitted to these smaller actions they usually make the ideal light hunting rifle. Considering that a Springfield .22-caliber barrel is used, it will prove more than expected, owing to its remarkable accuracy. It is not advisable to reduce the weight unless a lighter rifle is desired, and then only to turn off some of the surplus metal at the breech to bring out better lines. The muzzle may be reduced only to the extent where it is possible to fit a neat and satisfactory ramp. A barrel for a cartridge like the .22 Hornet can, of course, be made much lighter; but then a single-shot action in the Stevens, Winchester, Martini, Ballard, etc., will carry all the weight necessary to make up the difference in weight of action; on the other hand, on a Springfield M-1 rifle with a standard sporting stock, the barrel can be reduced considerably to bring the weight of rifle between 7 and 7½ pounds.

Alteration on Tangs — When remodeling any of the single-shot actions or the straight-grip receiver with the under tang separate, it is possible to bend these into a very neat curve so that a full pistol stock may be fitted. This cannot be done on the Stevens action as most of the parts are of malleable iron. The bending of the tang on some actions requires the making of a new spring; still, some can be bent without a new spring as on some of the single-shot Winchester actions. When first studying the tang to bend these for forming a pistol grip it seems rather a difficult operation, but it is only one of the ordinary problems the gunsmith faces during the course of a day's work. To begin with, the action should be completely stripped of all screws, pins, springs, etc.; in fact, every movable part should be removed. Having completed this, assemble the under tang again and lay the action on a piece of sheet tin or brass and with a sharp scriber draw a complete outline of the top and bottom tang on the metal. Then on the same sheet tin or brass, lay out the exact curve you wish the new pistol grip to have, so as to show the new position of the curve on the lower tang. Since the lower tang is removable on the Stevens and Winchester actions, this is now removed and the bending operation takes place. Refer to Chapter XXIV, Volume I.

The student often makes the mistake of bending the upper tang. The upper tang should never be bent but left straight, only the lower one being curved to form the pistol grip. If the upper tang of the action is bent, it only tends to reduce the size of the grip, and the comb must stand up out of all proportion above the handhold or grip. As a matter of fact, the high comb usually wished on the new stock is going to protrude too much to look graceful in the harmonious blending of outlines.

Before any bending operations take place, steel screws must be fitted into all tapped holes. The object of fitting these blind screws into the tapped holes is that when the bending takes place they may not be bent out of shape. The usual trouble experienced is that the holes close in because the metal is weakest at these points. Having thus prepared the lower tang for the bending operation, male and female forms should be made from a piece of cold-drawn steel small enough so they can be used in the bench vise. A hack-saw and a file are the only tools necessary to make these forms. After they are completed, heat the tang to a cherry-red and pull the two forms between the two blocks. A little beeswax placed on the face of the vise jaws, with the forms pulled up against this, will usually hold them in place until the operation is finished.

If the student is skilful at the forge or anvil, the lower tang may be heated to a cherry-red and bent by carefully hammering over an anvil horn. All tangs can easily be bent cold after once being annealed in the form first described, but it is better to heat them to relieve any strain and obviate the danger of forming surface cracks.

If the student does not care to go to the trouble of making the male and female forms, three round copper rods may be used in the vise. Cut three pieces ½ inch in diameter and 3 inches long and make a right-angle bend on each rod about in the center so they will hang over the vise jaws—two are placed on the back jaw and one on the front. Insert the tang between the three rods so that the single rod is on the side where the curve is to be formed. Gradually tighten the vise, making a slight bend. Loosen the vise and move the tang in a different position on the single rod to increase the bend, and again tighten the vise. Continue with different positions until the desired curve is formed. The tang will be marred very little by this operation, and the little dents that do occur in the metal may be removed by filing and polishing. Care should be taken not to form too sharp a bend near any of the screw holes, even tho they are plugged with steel screws. A perfect curve is the object. Continue to test the curve on the lay-out on the metal until one that is most effective is found.

If the lower tang is integral with the action a different method of bending must be used. Clamp the flat side of the action very solidly in the vise between two copper vise jaws. Two wrenches

should be made from ⅜ x ¾ inch cold-drawn steel. Slots are cut out on the end just the width of the tang; these should be about 14 inches in length so that the proper leverage may be applied in order to bend the tang to the desired form. One wrench is used to hold the tang and placed in such a position that it will not start the bend close to the action but near the end. Heat the tang with a gasoline blow torch to a cherry-red and hold with one wrench while you bend with the other.

The alterations of most under tangs on single-shot actions require the making of new screws, particularly those which go through from the upper tang and screw into the lower; but when the bend is turned down to such an extent that a full-length screw cannot be used it may be advisable to use wood screws in both the upper and lower tangs. On some of the Winchester single-shot actions the tang is long enough so that the bend only comes up to the long rear screw hole. The bending of most tangs with the exception of the single-shot Winchester action requires the making of new main springs as well as screws. Chapter XXI gives the information for making springs, and this must be studied before any of the alterations take place.

The bending of a tang also requires alteration of the under lever on most single-shot actions. The lever is made of a heavy piece of metal and may be heated in the forge and bent to any shape by carefully hammering on the anvil or over a form, unless it is made of malleable iron. After a lever has been straightened out a good many assemblings may have to be performed before it comes into the proper position against the bent under tang. Be very careful to hold the bend of the trigger guard and the bend of the under tang so it can be formed from there back to any shape which will be most suitable for the owner. It is often advisable to weld a suitable extension to the end of lever for the purpose of operating it freely. On most of the levers a round knob is formed which is not only a means of showing artistic taste in the forging operation but will give the fingers a better grip in the act of closing or opening the action. The bending of any under lever requires the same general outlines scribed upon a piece of sheet metal as explained in the bending of the under tang. These bends must be laid out prior to the alteration, and even then a considerable amount of fitting is necessary. What little changes are required, however, can usually be done cold in the vise, as the metal is well annealed after a number of heatings in the forge.

Bushing Breech Blocks — Altering a single-shot rifle from a rim-fire to a center-fire means changing the breech block and inserting a new firing pin. The only practical and safe way to do this is to anneal the block, counterbore into the old hole, and fit a standard shotgun or double rifle firing-pin bushing. The usual size to make these bushings is ½ inch diameter at the head with a ⅜-inch tapped hole, using a fine thread such as 32, 36, or 40 threads per inch. After the plug is made and fitted into place the center is located in the following manner: A length of drill rod is selected which fits the bore perfectly, and on one end a center is turned; this is hardened and tempered and inserted into the muzzle. Before any indentation is placed upon the firing-pin bushing, care must be taken that the breech block is fitted into its proper position. If this has been done a slight tap of the hammer on the opposite end will place the true center in the bushing. Since nearly all single-shot firing pins are on an angle in the blocks, the setting up and drilling of the new firing-pin hole must be done on the same angle in the drill-press vise. First, a 1/16 center drill is used and then followed with a No. 44 drill, piercing through the plug into the firing-pin opening. After the firing-pin hole has been drilled, two small holes are drilled into the plug on a center line with the firing-pin hole close to the outside edges. A special wrench is made to fit into these holes to remove the plug. The rear is reamed out with a firing-pin reamer within 3/32 inch of the face. The firing-pin hole is now eccentric with the rear hole. Consequently there are only two things to do: either make an eccentric firing pin or bore the hole to the true center established in the firing-pin plug. The boring of the true center through the block means an elaborate set-up on the lathe; therefore, it will be much more economical to make the eccentric firing pin.

Firing Pins — Figure 129, Volume I, illustrates the correct point or end to be made on any center firing pin. Always remember that the correct projection of firing pins is 0.065 inch maximum and 0.055 inch minimum; this is the distance a firing pin should show from the face of the block or bolt. The importance of the correct form of firing pin as well as the proper steel to use cannot be overestimated; also correct heat-treatment of the steel. The best steel to use for firing pins is a high-grade chisel steel, which should be hardened in oil and the temper drawn in an oil bath heated to 625 degrees Fahrenheit and left in this bath for one hour. Naturally, this is a lot of trouble for one firing pin, but when rifles are to be used against dangerous game the effort is not too great; even if it took one hundred hours it would be well worth the time spent if a human life were at stake. The same

painstaking care should be used if it is only a firing pin for a single short Hornet rifle to be used in the field on woodchuck.

Flats or notches required on the side of a pin should be filed by hand. The most convenient way to do this is to hold the finished pin in a drill chuck held in the vise. This avoids marring the pin in the vise jaws if the copper jaws will not hold it in the correct position for filing.

A great many accidents may be attributed to faulty firing pins. Too much care cannot be exercised in the proper development of any firing pin and its correct profile, particularly at the point the illustration shows. The large diameter of the pin should fit the hole in the block easily, yet without too much clearance. The fitting of the striking end into the hole should also be a free but perfect fit, and lastly the pin should be made of good tool steel, highly polished, then hardened and the temper drawn to a point that will obviate the possibility of breakage. Be positive that the check screw or pin is in the best condition. The student may be entrusted with the making of any firing pin if he will follow the above instructions; after he has acquired reasonable proficiency with tools he will find that a firing pin is an easy part to make. It should be remembered, however, that firing pins when not made correctly have been the cause of robbing many of eyesight, and when that is destroyed it can never be replaced.

Extractors — When breeching up new barrels against the breech block on any of the single-shot actions there should be a perfect fit between the barrel and block, so that when the under lever is worked there will be no appreciable effort to drop the block. These instructions apply to any cartridge; therefore when the extractor slot is cut out and the old or new extractor fitted into the proper position it should be flush with the face of the barrel.

The old extractor may be used when fitting a Hornet barrel if the previous barrel or caliber has been a .22 rim-fire, but if it was a larger caliber it is necessary to make and fit a new extractor. It is a much better plan to secure a new factory-made extractor whenever possible, particularly if the action should be a Stevens or Winchester; but if it is an obsolete arm it is necessary to make one. The best steel of which to make a new extractor is cold-drawn or machinery steel case-hardened to a considerable depth. Tool steel will not stand the pressure of extractors, even tho the proper heat-treatments have been given; whereas the mild steels with the case-hardened surface and the soft core will stand the greatest strain.

Make the length of the extraction end slightly longer, so that when the reamers are placed into the chamber a perfect radius will be formed. The extractor should be in place when the rough and finish reaming operation takes place, and also the counterbored sections for the head, so that the cartridge head enters to the proper depth for correct head space. After fitting the new extractor it is case-hardened as described in Chapter XVI, except that it is left a little longer in the cyanid bath than the usual run of work.

Many of the old single-shot actions were made to be unscrewed from the receiver or the take-down principle applied. The barrel screwed into the frame and was held in alinement by means of a set-screw under the forward end of the receiver. When fitting a Hornet barrel this principle must be dispensed with and the barrel tightened into the receiver with a large wrench so that a perfect joint may be formed between the barrel and action. The set-screw is then placed back into the action only for appearance or removed altogether and a blind screw fitted.

After the student has all the work completed on the barrel and action, the next question is the finish of the weapon. The barrel will naturally require a blue finish, but the action, particularly the single-shot variety of Stevens, Ballard, Winchester, etc., look much better when case-hardened by the pack-hardening method described in Chapter XIX, Volume I, or Chapter VII in the volume you are now reading. The smaller actions, such as the Stevens, may be given the cyanid treatment. Parts which require considerable hardness to resist wear, such as the blocks, hammers, pins, etc., and which are well protected and subject to little danger of breakage from strain or percussion, may be left a little longer in the cyanid bath to obtain a deeper surface to the exterior, particularly on low-carbon steel. The heat-treatment for colors on bolt-action arms when converted to the Hornet rifle should never be attempted by the beginner. Such work requires experience in the working of metal, and the best results will be obtained by bluing the parts. Failure, due to lack of the required knowledge of the contents of steel, would lead to disaster. There have been too many mistakes made already to warrant any person taking chances in the heat-treatment of alloy steel used in nearly all bolt-action receivers.

The demand for a suitable small cartridge with a high velocity has been the source of a great many trials and experiments until this .22 W.C.F. cartridge was brought to light again. Many have found the .22-long rifle cartridge lacking in many respects; and the same is true of other cartridges in this class, such as the .22 W.R.F., known as the .22

Special. The .22 Hornet, with the same weight of bullet except with a jacket of gilding metal, brought the velocity up over double that secured in the rimfire ammunition. High velocity was the thing wanted, and it was made possible by such men as Colonel Whelen, Captain G. L. Wotkyns, Captain G. A. Woody, and Mr. A. Woodward of the Springfield Armory. I may have neglected to write upon some of the most interesting results in the performance of the Hornet cartridge and rifle, but these men have gone into the subject extensively.

I know that a number of men will never be satisfied with the velocity the cartridge is now giving, and that experiments will be made to secure a much higher velocity; but then a new case must be designed, and when that is done it will require a banded cartridge similar to the Magnum cases used in such ammunition as the .375 Magnum class. It is well for the man who has such ideas to carry these out to satisfy a certain fancy, but as it often happens, men with these ideas are not in any financial position to bring them to light, and those who are will have the work performed by others, or are quite satisfied to purchase an arm in a standard caliber such as in the Hornet class. I shall now present Captain Woody's explanation of the chambering of the .22-caliber Hornet with drawings of his own design for the necessary reamers to perform the operation. With such a good explanation of this operation, any other caliber can also be done, provided the necessary reamers are constructed for the particular cartridge selected.

Chambering the .22-Caliber Hornet

By Captain G. A. Woody

There are several rifles suitable for modification to take the recently resurrected .22 W.C.F., or, as it is commonly known, the .22 "Hornet." Because of the fairly high pressure obtained in this load, care should be exercised in selecting a rifle suitable for it, and should there be any doubt in one's mind regarding the strength of the breech and chamber walls, he should consult one who knows the strength of various guns, particularly the ones from which the selection is being made. As noted above, the chamber walls are mentioned. Barrels of mild non-heat-treated steel are often put on more or less cheap rifles. Some of these rifles have breech strength sufficient to hold the Hornet, yet a chamber made in the mild steel barrel will very probably enlarge, due to cold-working the metal. In enlarging, there is very little danger of a rupture, as the metal is in reality being set up in such a condition to withstand tremendous pressure. Yet the enlarging of the chamber is detrimental to accuracy obtainable with this cartridge. Further consideration should be given the barrel since the fairly high velocity and jacketed bullets will eventually, and no doubt very soon, wear out where a heat-treated barrel might last for thousands of rounds.

Another consideration is the action. This cartridge is very accurate, its accuracy at 200 meters equaling that obtained with the finest heavy barrels firing the most accurate caliber .30 ammunition. Obviously, in order to take advantage of this extreme accuracy it is necessary that the action selected have a mechanism which can be tuned up to a nice sensitive trigger pull, and so maintained. It is useless to select a rifle, however good the barrel and breech action is, if the trigger pull is not first-class.

Having mentioned above the selection of a breech action, there remains the selection of a breech bolt or block with a sufficiently small firing-pin hole to prevent extension of the primer through the firing-pin hole. A great many rifles suitable to take the .22 W.C.F. or Hornet have relatively large firing-pin holes. It has been found that for the Hornet the holes should not be larger than .070 inch, and .060 is preferable. Pins as small as .050 inch have given excellent results. No doubt larger holes would give good results, yet there is always that danger of blown primers; this reaches extreme danger in hammer-actuated mechanisms where the end of the firing pin is dangerously near the shooter's eye. A great many rifles suitable for modification to the Hornet are rim-fire and it is necessary either to purchase a center-fire block, or bolt or plug the off-center hole and drill a center-fire pin hole. There are various means of filling in these holes. Some resort to welding and some plug them. In all cases the hole should be well closed with metal capable of being subjected to the pressure exerted by the rim of the primer cap. This pressure is usually very high and has been known to set back bushing plugs incorrectly seated.

In selecting a breech block or bolt, a determination should be made of the steel used. That is, one should know whether it is a case-hardened job or high-carbon heat-treated, or nickel steel. All case-hardened breech blocks and bolts require annealing before machining, whereas many of the high-carbon or nickel-steel bolts and blocks can be machined without being annealed. This is particularly true of nickel steel. However, should it be necessary to anneal the high-carbon or nickel-steel bolts or block, material of practically the same nature as the part to be plugged should be selected, out of which the plugs or bushings are to be made; because when these parts are again hardened and drawn together with the bushings or plugs they

will all have practically the same hardness. On the other hand, should such parts be machinable without annealing, the material used to plug or bush should be hard, such as high-carbon drill rod, since it, in its unhardened state, is sufficiently hard to withstand severe punishment. If possible, it is often wise, after machining plugs of this material to size, to give them a slight hardness before they are inserted in place. This is particularly so of firing-pin bushings, since the sharp edges of the hole will always break down under primer-cap pressure if left in an unhardened state.

In the case of pack-hardened or case-hardened block and bolts, it is always necessary that the part be annealed before machining. This annealing is best accomplished by bringing the part up to a cherry-red heat and allowing it to cool in a box of powdered asbestos. Cooling in the air will often produce hard spots. The selection of material used for plugs or bushings for this work should be confined entirely to low-carbon steel—a steel that will not harden in water. This is necessary since the part which has previously been annealed will have to be subsequently hardened by quenching in water. High-carbon steel would be too brittle under this quench. It will be found that these soft steel pieces will require some case-hardening; this is best done when the bolt or block is being rehardened by spreading on the bushing, when hot, a small piece of sodium-cyanid. It is not wise to resort to pack-hardening unless the bushing or plug is relatively heavy, as this treatment gives a deep case which will often render the part too hard throughout, giving it the same effect as if high-carbon steel had been used as material for the bushing. Annealing and rehardening of block and bolts should not be done by other than competent mechanics who understand the resulting stresses and strength required.

In the selection of any rifle for modification, care must be exercised to see that the extractor is capable of handling the cartridge to be used. Some rifles have extractors which handle the .22 rim-fire, yet cannot by any ingenuity be modified to handle a cartridge the size of the Hornet. The barrel should have a bore diameter of approximately .2180 to .2185 inch and groove diameter of .2230 to .2235 inch. However, it is claimed by some that .2175-inch bore and .222-inch groove is satisfactory. To get real accuracy, it is doubtful that the groove diameter should be much smaller than the bullet. With bullets running from .223 to .2235 inch, and some .224 inch, it is recommended that a barrel be selected that will have a groove diameter not less than .223 inch, especially when the lands have a large percentage of surface in relation to the grooves.

One of the most popular rifles capable of being modified to take the Hornet—and beyond doubt the most satisfactory—is the caliber .22 Springfield, M/1. The barrel, while designed entirely to handle the caliber .22-long rifle cartridge, handles the Hornet bullet of sizes from .223 to .224 inch.

Obviously, one of the first considerations in chambering a rifle is to provide a reamer. The reamer should be of a size that will accommodate any cartridge you intend to use in the rifle. This should not be taken to imply that it should be capable of accommodating any make of ammunition. There are some commercial firms who are so thoughtless as to make ammunition of any and all sizes. There are, on the other hand, some companies who have tried to standardize their ammunition and a rifle handling one make will handle the other make just as well. In selecting the types of ammunition from which to obtain the reamer dimensions it is well to select a few cartridges from makers who are more or less standard. Measure the salient features, such as the neck diameter, the diameter at the shoulder, the diameter at the base, the angles of the shoulder and the various lengths. These dimensions should be listed. From these dimensions select the dimensions you want to apply to your reamer. Be sure that in no dimension selected will there be interference with any cartridge you have selected. And bear in mind that you are probably in possession of some minimum cartridges. It is desirable that you obtain from the manufacturer the dimensions of the cartridge, but this is not always possible, so you have to take what you can get.

A chamber reamer should ream your barrel to take the cartridge you are to use plus a slight clearance. For a cartridge of small caliber this clearance should not be more than .001 at the base and about .002 to .003 inch at the shoulder and neck. Never have the neck too tight. It does no good and often a lot of harm. A good cartridge has its bullet and body loaded in line and it should be fired this way. The recess for the neck should extend about 0.010 inch to .020 inch beyond the mouth of the case. With these clearances given your selected dimensions, you can determine your reamer dimensions. The usual way to make a reamer is to select a piece of good tool steel of a diameter large enough to make a reamer with a pilot about one inch long and with a means provided to hold it. This is best accomplished by selecting a suitable thread to which you can attach a driving rod. Center both ends with a small center drill. Rough down to the dimensions plus about 0.015 to 0.020 inch, or more if the reamer is long, for grinding. Flute in the usual manner and do not be misled into using an odd number of flutes to

prevent chattering. This can only be had by using unevenly spaced flutes. Evenly spaced flutes allow quick and accurate measurement and a reamer so fluted will not chatter if the proper speed is used. In fluting, use good judgment to assure that your reamer, after grinding, will have good substantial flutes, yet sufficient chip room.

A reamer should be hardened, drawn, and ground in the usual manner. Leave it plenty hard and be careful with it. Grind to the dimensions you have selected. Back off slightly but not too much. Just assure yourself that your edges will cut and not drag. The pilot should fit the bore diameter snugly but should not be tight enough to bind.

In chambering a rifle with a reamer which you are not sure of, it is wise to get an old barrel first and chamber it. Adjust your breech in order to fire a shell in the chamber. You can learn a lot from the fired case and correct your reamer accordingly.

The above preliminaries to chambering a Hornet rifle, while condensed, are considered essential to doing a good job. As stated above, the Springfield M/1 caliber .22 is considered one of the most popular and easily converted rifles. The bolt is removed and disassembled. Take the bolt head and remove the extractor and ejector. The ejector is removed by knocking out the small pin from the top. If the bolt head is nickel steel, it will have "N.C." stamped on the under side of the ejector stops and can be machined without annealing. If of carbon it will be very hard and require annealing. This is done in the usual way to allow free machining. The first operation is to plug the firing-pin hole. This hole has a 60-degree bevel in the rear end. A rod should be selected of a diameter which will just about fill the largest diameter of this beveled hole. If the bolt head is carbon, this rod should be of a low-grade carbon steel. If the bolt is nickel, it should be of high carbon. Do not make a mistake here, since the carbon bolt head will subsequently be hardened without annealing whereas the nickel-steel head will not be hardened and the high-carbon rod is necessary to give the plug the maximum strength. One of the easiest methods of plugging is to tap out the firing-pin hole into which is screwed tightly a threaded end of the rod which has previously been shouldered back on a 60-degree included angle bevel. With a scratch awl, mark through the ejector slot, a line on the rod just about .010 inch above flush with the bottom of the large hole in the head. Remove the rod and with a small cutting-off tool ground slightly to an advance toward the bevel of the rod, turn the rod just at the line on the rod to a diameter just under the diameter of the turned and threaded end. This will allow you to screw the rod again in the head, the last pressure twisting it off smoothly at the cut you have previously made. Before screwing in the rod for the final operation, the hole at the front end of the bolt should be counterbored with a diameter of about .120 to .125 inch to a depth of about .080 inch. Into this counterbore you can upset the end of the plug by hanging the bolt head over a hardened rod which just enters the small hole in the interior. To do this operation properly, the threads should be removed from the end of the plug, which will be in the .080-inch-deep counterbore. Be sure that you have left sufficient metal on the end of the plug to upset into the counterbore.

Having completed the plug, the next operation is to recess the end of the bolt for the cartridge head. Chuck up the bolt head to run central and with a well ground tool slightly counterbore the head to a depth of not over .100 inch below the original face and to a diameter of the cartridge head plus about .015 inch. This recess is necessary in order that the lip of the extractor will not be cut too thin for the thick head of the Hornet case, yet you should not go so deep as to weaken the extractor-retaining recess in the head of the bolt. Leaving the bolt still chucked up, the next operation is to bore a hole in the center. This hole should be about .050 in diameter and through the ends to the head interior. Now remove the head, and with a flat reamer shaped with a bevel, ream the hole to about .060.

The bolt head is now complete except for hardening. If of carbon, it should be heated to a good red and smeared over at the forward end with sodium cyanid, or if possible, pack-hardened. Usually if you have not cut through the case when recessing for the cartridge head the cyanid will be satisfactory. This, however, gives only a superficial case.

The striker should be removed and annealed. Leave the pin in but cut it off flush with the end. Select a drill about .10 inch and drill into the end of the striker while it is chucked up to run absolutely central. Into this hole, which should be about ½ inch deep, drive a piece of drill rod. Cut the rod off, about ½ inch extending, and turn it down to fit the hole in the bolt head, leaving a good substantial point at the place it joins the striker. The extreme point should be reduced to just fit the .060 hole in the head, and when the striker is dropped into the bolt head it should bottom. Assemble the bolt, and with the cocking piece down in the cocking angle, the pin should be reduced to give a pin protrusion of about .050 inch or even less. Remove the striker and round off the point to a perfect hemisphere. You can now harden the striker and pin together and draw to a blue. Never have it too hard.

The extractor lip should be cut down and beveled just so as to grasp a shell; and the ejector, which, like the extractor, can be filed without annealing, needs to be cut back until it comes flush with the cartridge head. The bolt head, extractor, ejector, and striker are now completed.

The driving rod you have selected to drive the reamer should be turned to fit in the handle of your bolt. This supports the reamer. A flexible joint, somewhere near the point it is attached to the reamer, is very desirable. However, if it screws to the reamer and makes a straight assembly, it will be satisfactory without the joint. To recess the end of the barrel it has been found very convenient to have a counterbore with a pilot which fits the .22-long rifle chamber, and which cuts a recess the diameter of the Hornet head, plus about .010 to .015 inch. The counterbore should fit the driving rod, and a disc the thickness and diameter of a maximum cartridge head should be used to determine with the bolt the headspace you want. The bolt should close snugly against the disc or headspace gauge.

Having determined the proper headspace, proceed with the reaming. Always ream slowly, use plenty of lard oil, and keep the reamer clean. Do not allow the reamer pilot to disturb the surface of the lands adjacent to the bullet seat. This seat, which, of course, is made by a cutting edge just in front of the neck, should be carefully made. It is essential that the bullet shall rest concentrically with the bore and in perfect position to start forward without lateral movement. Herein lies one of the greatest secrets of Hornet accuracy. Carry the chamber forward gently, trying several cartridges until you can close the bolt. Do not make the mistake of carrying it too far forward as a result of hanging up on the head. You will often hear that a rimmed case does not require a close fit at the shoulder, yet best results have been obtained where this fit was snug and the case was not allowed to expand more than absolutely necessary. The mouth of the chamber should have the corner broken down slightly to prevent the case scraping.

You can now try your rifle after having thoroughly removed all chips. Examine the fired case. If there is a tendency to stick, the place will show up on the case and you can lap the chamber out with a stick which just fits snugly at the point you want enlarged or smoothed. It is an excellent idea to lap the entire chamber, but do not disturb the bullet seat. The bullet should just begin to engrave when the bolt is closed. If it is a little too tight you can run your reamer in slightly or you can adjust the reamer to lengthen the seat and not change the chamber. Always be sure to remove all the lapping material before firing the gun.

If you intend to chamber several jobs, make up a roughing reamer; an excellent idea here is to have the size of the roughing reamer just the size

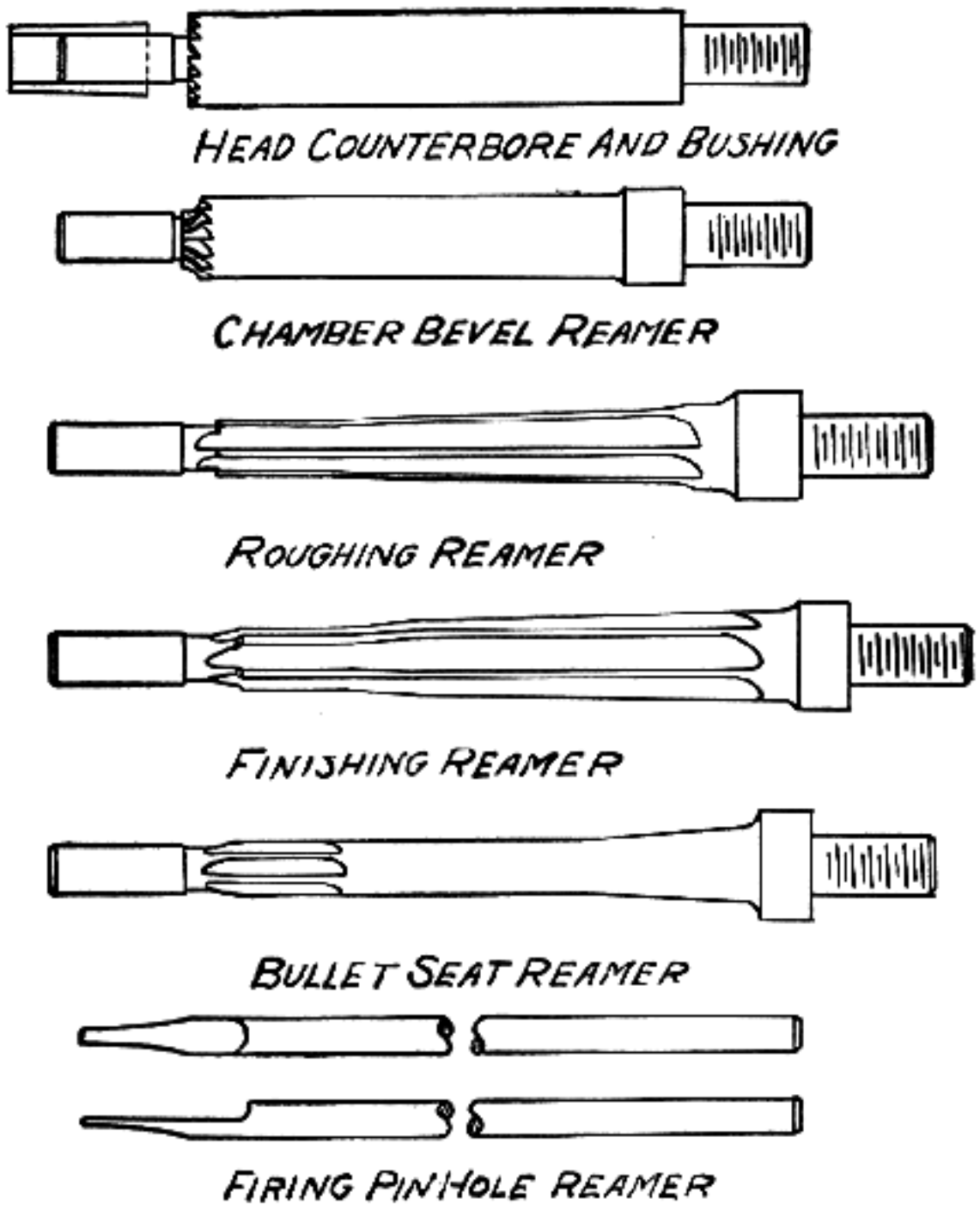

Fig. 90
Caliber .22 "Hornet" chambering reamers, etc.

required to make a resizing die. Your regular reamer will have to cut very slightly and will remain to size a long time.

Figure 90 shows the essential tools required to make a good Hornet job. Figure 91 shows the

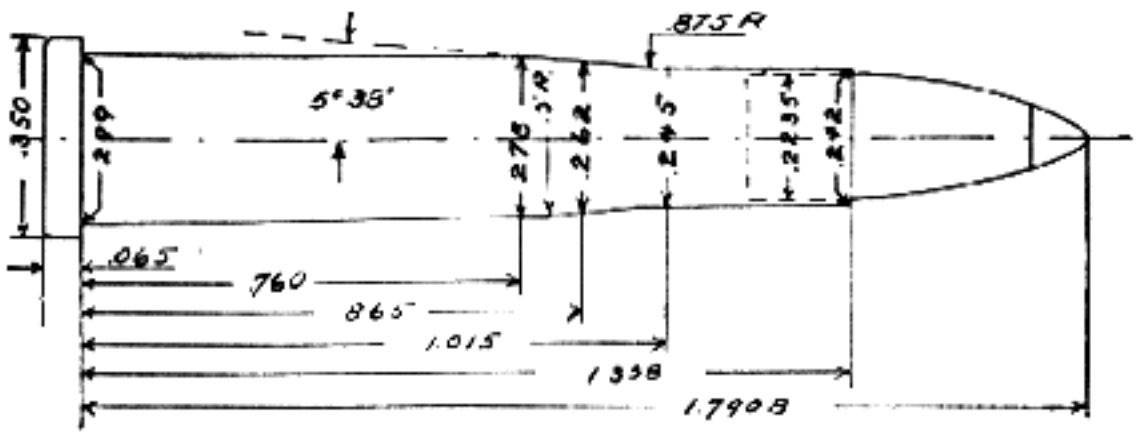

Fig. 91
Caliber .22 "Hornet" maximum case measurements

cartridge dimensions which will give excellent results.

After you have given your chambering and other alterations your best attention and have obtained by your efforts an excellent job, it will amount to nothing unless you stock properly. The stock of a Springfield rifle is so designed as to bring out the

best shooting results obtainable, but some miserable failures can result if the bedding is not right.

When a barrel and receiver assembly is dropped into a stock it should come to rest on three points. These points are the inside tip of the forearm, the recoil lug, and the rear tang. The bed of the receiver should not come in contact with its seat until the front guard screw is drawn down. With this screw drawn down, there will be considerable pressure between the barrel and the tip of the forearm. When the rear guard screw is drawn down this pressure will be relieved due to the rear tang sinking into the stock before contact is made with the metal bushing surrounding the screw. This pressure, however, should not be decreased to a point lower than about three to five pounds. The barrel should not touch its bed except at the tip of the forearm. Before the front guard screw is drawn down there should be about .015 clearance between the bed of the receiver and its bed in the stock. This clearance varies with stocks of various wood densities. When the front screw is drawn down there should be considerable squeezing of the wood before the front guard tang comes in contact with the receiver. This and the squeezing the stock is given, are absolutely essential to good stocking. Obviously, it is necessary that the barrel fit straight in its bed and not hug either the right or left.

Wood seldom remains in the shape it was cut. It changes shape as it takes on or lets off moisture. Even well oiled stocks will change shape; as a matter of fact, the addition of oil relieves strains, and if these strains are present when the stock is made it will go out of shape when the oil is added—not much, but to an amount dependent on the strain present. Hence it is almost impossible to machine a stock and have it just fit a barrel and receiver. It is often necessary, therefore, to bolster up certain portions of the stock that are low and to cut down high spots. Often the part under the receiver rear tang needs a pad to give it the proper squeeze, and this holds true for the portion under the guard front tang. Sometimes the barrel needs a thin bolster. For this nothing is better than a good piece of cardboard or paper shellacked in place. Never be content with the bedding of a stock because a reputable stock maker made it. When you have it, it may not be as it was when he finished it.

CHAPTER XIV

Relining of Rifle Barrels

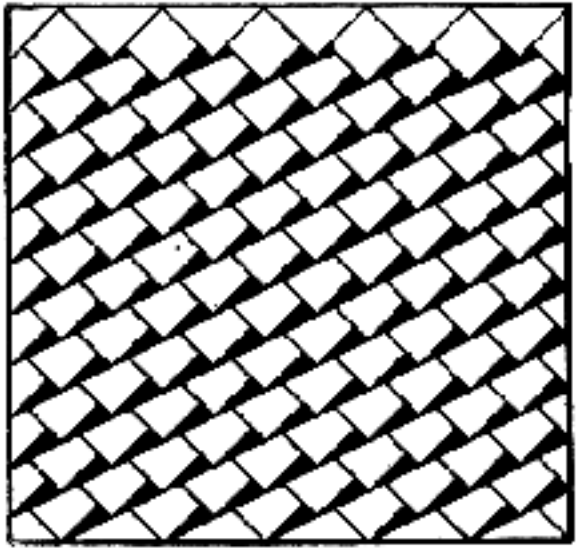

CHAPTER XIV

Relining of Rifle Barrels

THERE are a large number of fine old .22-caliber rifle barrels on single-shot actions that have been shot out and rusted because of neglect. On many of these arms the exterior and the other parts are in perfect condition. The construction of a new barrel made to the outside exact duplicate of the old barrel, particularly on the outside diameter, would cost at least four times what the barrel could be relined for.

Naturally we must draw a dividing line at the relining of some of the cheap factory-made arms such as the Winchester Model 06 and 90. New barrels can be purchased for these arms for much less than a barrel liner would cost.

When even the small shop intends to set up for such an operation it would be well to use a lathe for the drilling and reaming operation, as described in Chapter X; that chapter contains the complete details for drilling and reaming a rifle barrel, and those instructions may also be applied to the enlargement of the interior for the rifle tube to be explained in detail later. The operation of relining an old barrel is very simple when the proper materials are procured. There are as many worn pistol barrels as there are rifle barrels, and the same instructions may be applied to both.

The British gunmakers are the pioneers in this particular line of work, and it has not reached its full popularity over here as it has in England.

The prevailing impression is that only .22-caliber barrels can be relined, but since this operation has become so successful in that caliber, other calibers have been taken into consideration such as the .22 Hornet, .22 W.R.F., .25 Stevens rim-fire, .25-20 W.C.F., .32-20, .38-40, etc. It will be noticed when studying any of the ballistic tables that all the larger cartridges have comparatively low breech pressures as well as a low velocity. The only reason why a tube cannot be applied for the higher-velocity cartridge is that the liners would have to assume the proportions of a new barrel in order to withstand the higher breech pressure established. Nevertheless liners could be made for some of these high-pressure cartridges (or as they say in southern Ohio, "high-voltage cartridges"), but it would be necessary to shrink a collar on the barrel at the chamber.

All tubes are obtained from the tube mill in two outside diameters which are ⅜ and ½ inch and have a small hole which is concentric with the outside. The hole is a true diameter from end to end. The making of such tubes involves considerable expense, but the assistance of metallurgical chemists with their elaborate laboratory equipment has been a great aid in producing a consistently high quality of even mixture of the alloys throughout the entire length of each tube. The first process which a rifling tube is subjected to is the straightening operation, and then comes a complete inspection. It is placed upon a standard barrel-drilling machine and a high-speed spear drill is slowly traversed through the interior while a constant supply of lard oil is used to cut and wash the chips away from the point of the drill. Figure 84 illustrates this drill.

This operation is called the rough-boring or drilling operation and is followed by reaming. After drilling, the tubes are again inspected—and straightened if necessary. At this stage they are slipped into tubular containers which clamp the tube in several places along its entire length with a hold firm enough to prevent it from revolving, yet without marking or denting it.

A 12-inch hardened and tempered bit is electrically welded to a long piece of tool steel similar to the ones illustrated in Figure 55 for the boring of shotgun barrels. The bit is packed with a strip of soft wood which is now used in the tube, and one of the cutting edges on the bit is forced into contact with the inside of the tube. Very fine shavings or chips are removed, so fine that when mixed with lard oil they feel like graphite grease. As the pressure from the wood strips decreases, thin strips of paper are skilfully inserted between the wood and the tool until the desired size of bore is obtained and the entire length is parallel. The tubes then go to the straightening press or anvil, where great precision is required. They are bored to within 0.0005 inch of the size the tube is to have when finished.

Before being placed on the rifling machine each tube is inspected for marks left by the reamers, or any other defects; also for straightness and concentricity. The reamed tubes that fail to pass be-

cause of interior blemishes are reworked and given whatever attention is needed to save them. Those which pass the final inspection and are considered to be in the highest state of perfection are rifled on a semi-automatic machine. The rifling head is of a novel design and cuts all grooves at once. The tool is similar to that shown in Figure 69. Absolute uniformity of rifling is obtained by revolving the dividing head and holding the tube in position in a chuck. After so many strokes of the rifling cutter, each tooth on the eight, six, or four-groove cutter takes a predetermined number of strokes along every groove in the interior, and the construction of these heads makes it impossible to cut one groove deeper or wider than another.

The liners have now reached the lapping stage of the operation, and again they are inserted in a holder like that described for the boring and reaming operations. They are lapped with a short lead lap which is automatically upset into the grooves at each end of the machine's stroke and has the effect of beautifully polishing the bottom of the grooves without removing the corners of the lands. The emery paste is fed into one end; consequently this end is a trifle deeper in the grooves and is therefore stamped for the chamber end of the barrel.

As soon as sufficient time has elapsed to remove all tool marks left by the rifling cutter in the interior of the liner, the tube is removed and placed into another special holder on another type of machine having a 6-inch length of lead lap that is cast into each tube on a long straight wire. This wire is stretched between holders on the lapping machine. A carrier on which the tube holder is fixed takes the tube backward and forward along this wire with the cast lap in place. This solid lapping operation, peculiarly enough, does not abrade the grooves as much as the bore, and therefore as it leaves the machine the liner is practically parallel, altho the grooves are about 0.0002 inch deeper at the stamped end than at the other, which is used for the chamber as heretofore stated.

After final inspection these liners are ready to be inserted into barrels. A large stock of liners is always available, and naturally a selection can be made according to whether the rifle is for a common sporting arm or a high-grade target arm.

The actual operation of inserting the liner into a barrel is undertaken as follows. All movable parts are stripped from the barrel while it is held vertically by a special attachment on a vertical drilling machine. A pilot counterbore is first inserted at the chamber end in order to have the drill make a perfect start—also to avoid trouble with the other operations, including that of drilling with the spear-pointed drill as illustrated in Figure 84.

The reaming operation is now carried out on a standard barrel reaming machine which resembles a long-lathe bed with a head stock and universal carrier to take any shape or size of barrel. The head stock is adapted to hold the high-speed reamer with a continuous flow of oil as the reamer is pulled through the bore.

The drill follows the original bore of the barrel and is made to cut a hole about 0.005 inch under the diameter desired. The barrel is then reamed out in a manner similar to that adopted for the tubes to give a clean internal surface to the barrel and at the same time a perfectly straight bore; if not quite straight, it is then straightened, tho this is rarely found necessary.

Taper reamers with pilots to fit the bore interior of the barrel for the purpose of driving the brass bushings when completed will be explained later. After selecting the liner, a barrel is placed on the soldering stand. Gas jets play along the entire length of the barrel, which is clamped down with spring clamps into two grooves cut in the stand. The inside of the barrel is tinned the entire length with a turning tool, or with a stiff wire brush suitably saturated with solder known as tinner's solder and containing 50% lead and 50% tin. The liner is then tinned externally after the end has been plugged with suitable wooden plugs of hard wood turned to the correct diameter and inserted in the heated tube.

Applying No-ko-rode soldering salts as a flux will make the solder run freely. Work the tube in and out of the barrel or until it is seen that the liner has a clean and bright tinned surface. When it is properly soldered into place, allow 1½ inches to extend from each end of the barrel. At this stage of the operation a split taper brass bushing, which is tinned inside and out, is slipped over at both ends and gently tapped into the tapered counterbored hole at the ends. When the ends of the tubes are cut off flush with the barrel, they give a complete finish to the ends, and also possess the advantage of centering the liner in the event the barrel-bore diameter has been drilled oversize in the operation.

During the time the soldered barrel is cooling off, it is placed in an upright position on one end; when completely cool it is suspended by a wire and struck with a small hammer. If it does not have any "ring" it is reheated, and upon the removal of the liner it will show that it is badly soldered in places. If well soldered it is placed in a boiling soda bath to remove all traces of the No-ko-rode soldering salts, which have bad corrosive effects upon both ends of the barrel or where it may have touched on the outside of the bluing. After this last-named operation the protruding ends are cut

off the liner. The breech end is filed or machined to conform to the original contour and the barrel is refitted into its action.

Before the liner was placed in the barrel, the action may have been very close between the block and the barrel and the face of the block worn very badly. Relining will restore the tightness between the new tube and breech block because the liner can be left standing out a slight amount, which is necessary to prevent bulged rims with the rim-fire cartridges or blown-out primers with center-fire cases. The liner is now ready for the finishing operation.

Final Finishing of Lined Barrels — These instructions should be followed very carefully if the finest results are to be obtained with any high-class rifled and lapped tube. Superior craftsmanship on the interior of a liner will show to advantage. The most correct process of finishing is necessary to obtain the finest accuracy. By fine accuracy is meant the consistent grouping into the 1¼-inch circle at 100 yards.

We shall assume that the liner has been firmly soft-soldered into the barrel and that it has a ring like a bell when struck with the hammer. The tube should then be made flush at the breech and a perfect fit made between the barrel and breech block. The extractor is then let in perfectly and should be held between the breech block without any lost motion. The chamber is now reamed out; this operation is extremely important, as I have pointed out in Chapter XII. After years of many trials we have adopted the chamber size that not only suits nearly every long rifle cartridge successfully but prevents gases from getting back along the case while giving perfect extraction. Figure 58 illustrates these chambers, and when the reamers are made to form them, no rings or blemishes should be seen. Gauges should be at hand to work to if many barrels are to be chambered in the course of time.

In spite of cutting the throat or head with the most accurate throating reamer, it can easily be seen that the rifling has slight flashes or turnovers, commonly called burrs, caused by the reamer cutting the lead into the rifling. These cannot be removed or corrected by a lapping operation because the lap only touches this place by accident; and to remove these burrs thoroughly with a lap would enlarge the throat beyond the limits of good chambering practise. We therefore first attack such burrs with a stiff bronze-bristle brush. After a few pulls back and forth, the most obstinate (which at the worst are only 0.0015 inch thick) disappear.

The greatest attention should be directed to the throating of a .22-caliber chamber; this should never be too deep, but in all processes of this operation the length of the chamber and lead should be perfectly regulated, so that when the breech block or bolt is closed, the bullet is slightly pressing into the lands.

A bullet should now be pushed through the barrel from the breech, and after forcing it into the rifling it should run perfectly smooth the entire length of barrel as far as the muzzle. This part calls for the closest attention, and if there is the least doubt about the chamber, first cut the tube off within one inch of the muzzle of the barrel so that in case of accident it can be pushed back to form another chamber.

Take a 50-degree angle countersink fitted with a 0.2173 pilot, and after being assured that the pilot fits correctly in the bore and will turn free, slightly countersink the end, again using the bronze-bristle brush to clear any burrs thrown up by the angle cutter. The barrel at the end should appear dead sharp as you look into the bore at the muzzle.

Assuming that the bullet is still in the tube, push it right through the end and make sure that no check can be felt as it emerges. In any condition it cannot be expected to slide through as well as it should; therefore a lap about 3 inches long at least should be cast and No. 320-M optical emery mixed with olive oil used; the high spots must be lapped inside at the point discovered and lapped out. Provided this is done carefully without enlarging the bore above 0.2180 inch or without deepening the grooves above 0.2235 inch, the rifle should group perfectly.

It should be noted that when the bore is bell-mouthed at the muzzle to the extent of 0.001 inch over the size that prevails through the entire length of the barrel, the rifle will never group consistently but will throw one or two wild shots in every group of ten. You will often find that a liner placed in a barrel will equal the finest matched barrels produced anywhere in the world. The information given here will be valuable to the small-bore rifleman; these suggestions, if applied, will solve many difficulties. It is still hardly realized that after a .22-caliber rifle has been made to group accurately, it is almost a crime to clean or in any way touch the muzzle end with a cleaning rod or pull-through. All cleaning should be done from the breech end whenever possible.

The possibilities of relining rifle barrels include not only the single-shot action but bolt-action rifles as well. There are many obsolete arms in the hands of riflemen throughout the United States, such as the Krag, Enfield, Russian Nagent, etc. Take the Krag for instance; there are many of these actions in the hands of riflemen, and their barrels

can be relined to take such popular cartridges as the .22 W.C.F. or Hornet, .25-20 W.C.F., .22 Savage high-power, .22 Baby Niedner, .25-caliber Roberts, .25-35 Winchester, 6.5 mm. rimmed head, etc. Various changes can be made in this action, such as removing the magazine and setting a plate over the opening where the cover has been removed, cutting out the center of the bolt channel and setting in one of the Savage or Winchester magazines, which would make the rifle a five-shot magazine rifle.

Many owners of Krag rifles object to the projecting magazine on the right side as it often interferes with carrying the rifle in the field, but by using the popular cartridges recommended, together with the changes, a very fine arm can be built up. Other rifles, such as the Winchester Model 95, Russian, Steyr, Lebel, etc., have the disadvantage of a projecting magazine, but often these disadvantages are compensated for by certain other good features as on the Krag. This last is the only magazine that cartridges can be dropped into, and if any one has gone through the experience of trying, with frozen hands, to place ammunition down into a magazine like that of a Model-95 Winchester, his prejudice against the box magazine of the Krag will soon vanish. If you find the magazine an objection, however, by all means remove it, as Figure 92 illustrates. I do not approve of this idea when using standard ammunition for the rifle, but for any other cartridge, when it is possible to install a new magazine and use any of the cartridges named, the removal of the magazine should take place and a neatly blued plate be fitted over the opening. When relining a barrel for the cartridges named, it becomes necessary to alter the extractor in some instances, particularly on such a small cartridge as the Hornet. The old extractor can easily be used, and the only work necessary is to build up on the end with a welding operation to increase the length, and alter it for the new cartridge used; then reharden and temper it to the color which will give the end the required strength for extraction.

The relining of a Krag barrel for the Hornet cartridge is very reasonable. The selection of any other method suggested, even tho only used for a single-shot arm, will not be advantageous until the time comes when a magazine feed can be provided. The Springfield M/1903 and the Enfield M/1907 could also be altered for any of the cartridges named; but to reduce expenses, the Krag offers the greatest possibilities even tho it will be found necessary to use it as a single-shot arm.

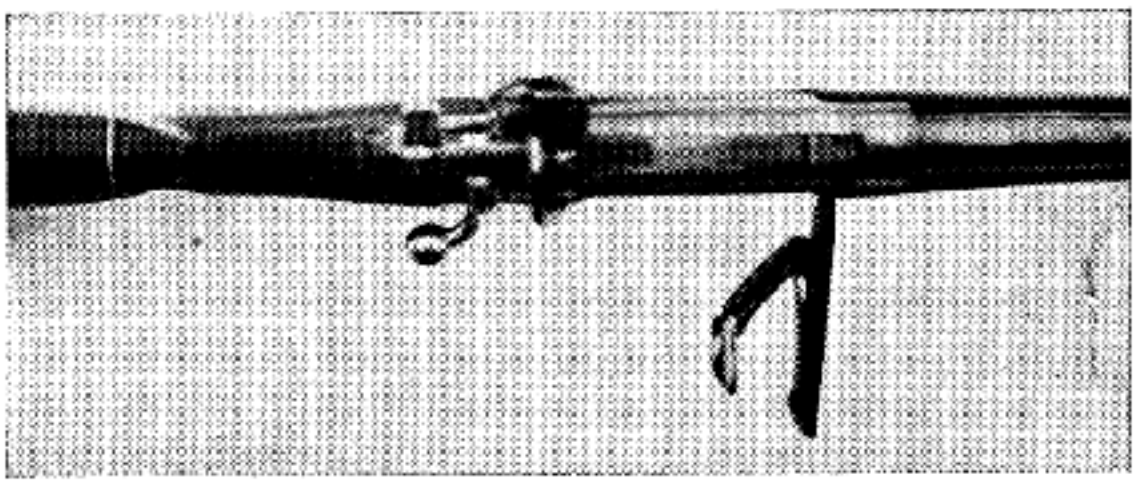

Fig. 92A
Magazine removed from a Krag rifle. Hinged cover in the opened position

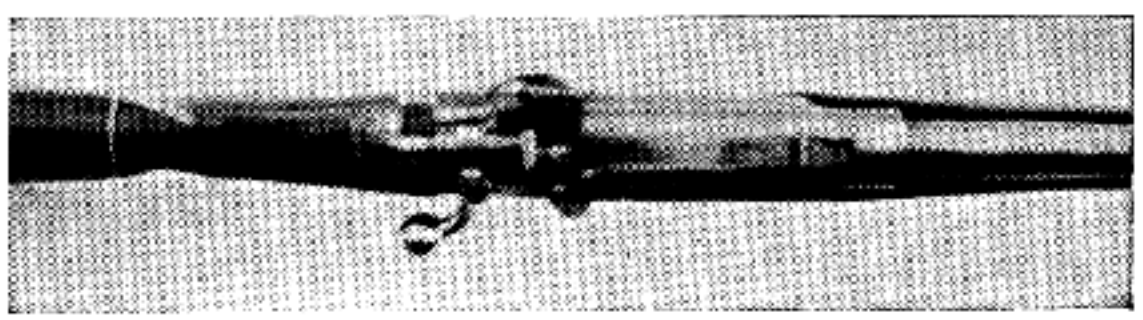

Fig. 92B
Closed position, showing the flush outlines along the action

CHAPTER XV

Striking Barrels and Polishing Gun Parts

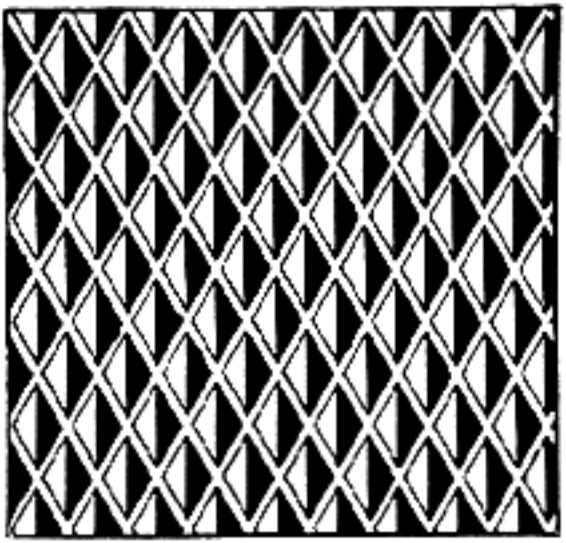

CHAPTER XV

Striking Barrels and Polishing Gun Parts

AS HAND polishing performed by direct labor on gun parts is a long and tedious operation, we must devise means to accomplish these same results by power, using suitable polishing and buffing wheels in such a manner that very little finishing will be required by hand.

The terms "polishing" and "buffing" are often used interchangeably, altho the special process of obtaining a very fine surface having a "grainless finish" is commonly known as buffing. Soft wheels are used to obtain this buffed or grainless surface. They are sometimes made of felt to which a very fine polishing material is applied, but usually they are formed of layers of cotton cloth and are known as muslin wheels. These cloth layers, the edges of which form the periphery of the wheel, are bound together and held on the machine or grinder spindle by a collar and nut. Some cloth or muslin wheels are sewn in a spiral, from the center to the outer edge; they are used to secure the required polish and buffed surface of the part. The sewn wheels are known as the "hard wheels," whereas the unsewn are the ones producing the high buffed finish. These cloth wheels have soft, yielding surfaces into which the work can be pressed so that every curve and corner of an irregularly shaped part may be polished. There are also wheels made of sheepskin, chamois, canton flannel, and paper.

The above methods are used when power is available to eliminate most of the hard labor connected with hand work. Having in mind the amateur's problems, I shall apply the hand operations as well, so that a clear understanding can be had of both methods. In the course of your work, power will eventually be used, even tho you attach a polishing or buffing wheel to a cheap motor; then this information will be of value to you.

The gunmaker usually makes most of his polishing wheels; something has been said of this process in Chapters I and II, Volume I. There are so many varieties and shapes that it would be difficult to name them all, but the principal kinds are of canvas, walrus, felt, rubber, leather, wood, and linen. The wheels mostly used by the trade are made from walrus and turned out to different forms and sizes to suit all conditions. They have emery or other abrasives glued to the surface and are employed extensively for finishing and polishing flat and rounded surfaces. The flat wheels are used when good edges must be maintained. There are wheels made of discs of sheepskin, either loose or held together. The loose wheels are used to polish uneven surfaces, and are usually mounted on small polishing spindles. The canvas wheels are made from canvas belting, and the emery paste or other abrasive is applied from the stick. Rubber wheels can be made from 1, 2, 4, 6, or 8 inch diameter round rubber, such as is used for pressure pads on punch presses. These have about the proper elastic properties, when covered with fine abrasives, to produce a very even and true finish. When the final buffing takes place, the part has a high luster. When the wooden wheels are used, they are usually turned very small, felt-glued, and used more to polish small springs having radii which would be difficult to get to in any other manner. These are coated with glue and a very fine abrasive is used.

When remodeling a rifle, as well as making a new one, the exterior metal parts must be finished to a high, bright polish prior to being blued or treated with any other form of finish desired. The final appearance of the arm depends mainly upon the high polish secured. This degree of polish is accomplished by a number of operations, such as striking, emery cloth preparation, rough polishing, medium and final buffing.

Striking — This term is often used in connection with shotgun barrel work and the finishing of rifle barrels. The term is the result of hand-filing a barrel (whether rifle or shotgun) lengthwise, holding the file while performing the operation in a horizontal position or at right angles. In the larger shops, barrel striking is in a separate division of the plant, and particular men perform this one operation. To prepare a rough-turned barrel, a series of striking files, made specially by the file makers for this class of work, are used. You can make your own striking files from new "vixen" files by forging the ends so that suitable handles may be used. These files are made up in various lengths, widths and forms to work out the rough metal and solder when ribs are sweated between the barrels

on shotguns. A considerable amount of practise is required before such files can be used successfully. They are drawn lengthwise of the barrel when the finishing takes place.

A mill file between 10 and 12 inches long is held at right angles to smooth out the high spots left by the striking files. When using the striking files, make a barrel holder from a piece of brass, one for each of the different types of barrels you may have to do, such as the Springfield, Mauser, Enfield, or Winchester M/54. Figure 93 shows one together with a holder for shotgun barrels. The amateur

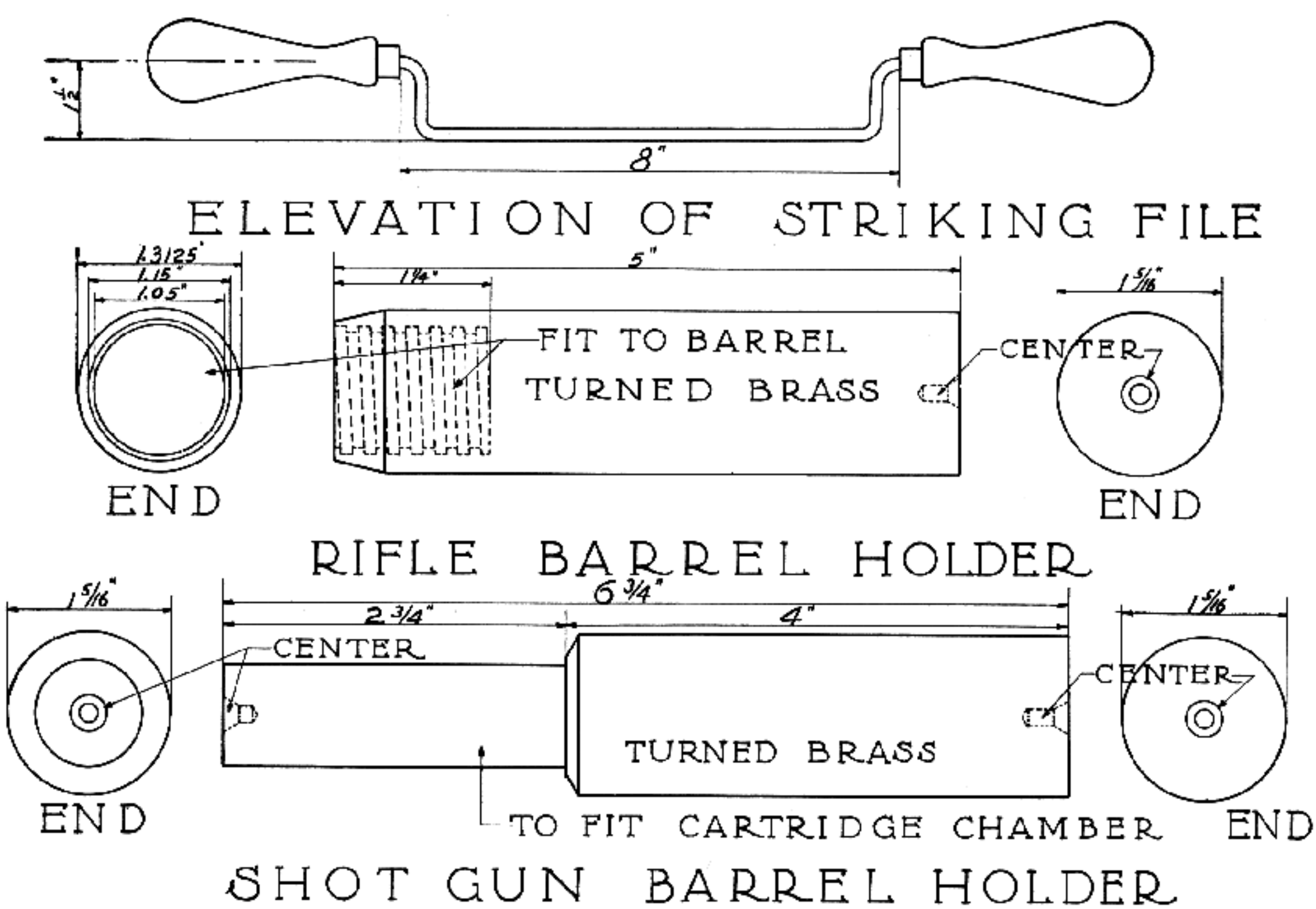

Fig. 93
Rifle and shotgun barrel holder. This is clamped in bench vise while striking or polishing takes place

may only have one or two barrels to polish; therefore, such holders as these will not be necessary, nor will the striking files be an essential addition to your tools, for they are of material benefit only when you are turning out a number of barrels in the course of a year. It would then pay you either to purchase a set of these files or make them yourself, if you have a milling machine to cut the teeth in the files similar to the vixen type previously described.

In this chapter I shall mainly keep in mind the student who is just starting to remodel a rifle, say a Springfield, Krag, or Enfield, without any equipment such as a lathe or polishing wheels to give the final high finishes required before the bluing of the parts can be done. If this is the case, you must do all this work by hand with a draw-file and emery cloth of different grades, adding the final high polish with French paper and crocus cloth. Such hand work requires time and patience to produce the same results that can be obtained by mechanical means. On the other hand, the beginner with a lathe can turn down the barrel on these same arms to any required weight and contour; the tool marks left by the lathe tool should be rough-filed or stricken out with a tool, as Figure 93 shows, and the barrels finished with emery cloth placed in a wooden holder, as Figure 94 illustrates. Of course, it is also necessary for the man without power equipment to make one of these, provided he will have other barrels to polish in the future; still this can be dispensed with and the emery and crocus cloth can be held on the file and used in the same manner, as tho you were draw-filing the parts in a lengthwise direction.

Assuming that you have turned down a barrel and wish to carry out the striking operations upon this part, you will have gained the experience that will enable you to judge the requirements of the necessary tools involved before using the 12-inch

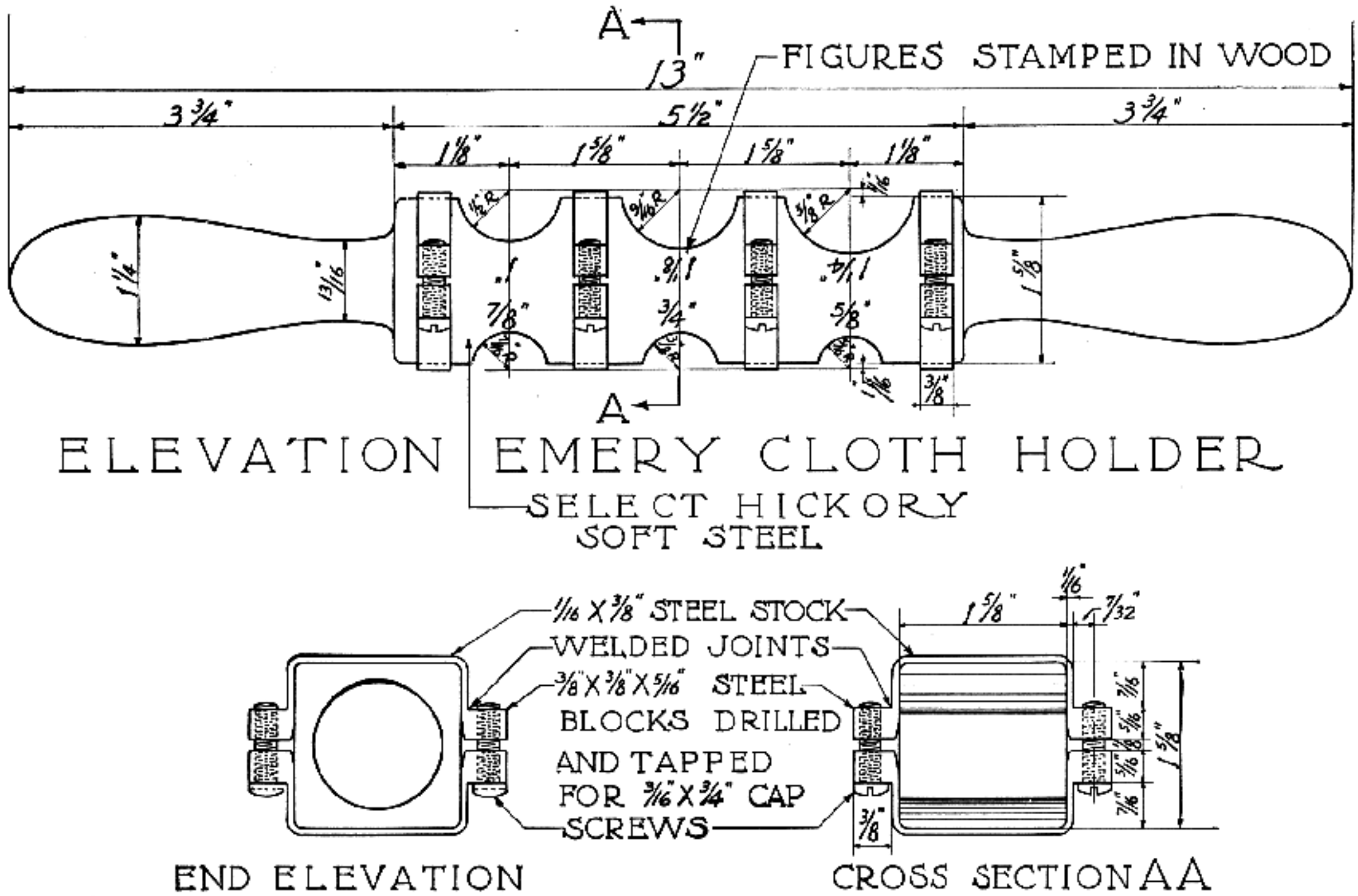

Fig. 94
Wooden holder for emery cloth when draw-polishing gun barrels

file to perform the final draw-filing. Purchase the vixen files (this type of file is used on aluminum and soft metals) in the narrow widths. Offset the tang and forge the end, and also offset this so that you can get a file handle on both ends. On the end you have forged, file and sharpen the teeth again before hardening the file. When all this is done, harden and draw both tangs to a blue up to the teeth on both ends, and insert file handles. You have a perfectly flat surface on the file thus made, but by ordering these from the file manufacturer you would specify a slight concave surface. With a file with a flat, you are obliged to use care not to produce flats on the work.

With the barrel fastened in the vise between lead jaws in the brass holder and the muzzle resting on a gun brace, you are ready to perform the so-called striking operation on a gun barrel. Stand at right angles to the barrel with the file resting lengthwise to the muzzle, and with even straight strokes begin to remove the rough tool marks made by the lathe tool. Do not continue in the same spot on the strokes, but always shift the striking file toward you or away, until it is necessary to turn the barrel a slight amount in the vise so that the rough surface is again in a convenient place to work. When a striking file is cutting perfectly, the chips which come off the metal should be in a curled form and as fine as steel wool, or straight and in the form of short wires, tho fine. With such results you know the file is at its height of efficiency. If the chips are only coming off in the form of dust, however, the teeth must be stoned or the barrel will have a wavy appearance when polished. Not only can you see these waves as you look along the barrel, but their feel will remind you of a wash-board.

When you come to the radius of the barrel near the chamber end, you will find that the straight striking file is useless: therefore, it will be necessary to make a file with a marked convex surface to enable you to finish the radius at that point. This is made in the same manner as the straight file with the offset tangs, except that it must be bent in the form of a bow to pass over this radius and at the same time remove the metal as you did on the straight cylindrical part of the barrel. These two striking files will last for years if the proper care is given them. When you have found the performance of such files greater than your expectations, you will continue to make them in a variety of shapes and forms, until you have a striking file for every kind of barrel you may wish to make or refinish.

It is better to make short striking files rather

than the longer ones, for better work can be accomplished with them. When the brass barrel holders are made for the vise, you then have the entire barrel length available to work on. As you become accustomed to the use of such files, you will be able to use a long one and even stroke the full length of barrel, maintaining a constant and even pressure to remove the chips in fine curled wires. It is not necessary to use as much bearing pressure as you would on a regular file. A little practise will determine the required effort and effect. Excessive pressure only makes flat spots, sometimes $\frac{1}{16}$ inch or more wide, and these are difficult to remove in the draw-filing operation. When you have had the required practise in this work, you will apply the proper pressure; the cuts will have scarcely any width and the barrel will have its true cylindrical surface.

When all the high spots have been removed, you have completely "struck" a turned barrel. If you do not have a lathe to turn a satisfactory taper and the necessary radius on the Springfield barrel, where the rear sight base has been removed, you must "strike" this barrel until the contour and taper is pleasing in appearance its entire length. With the striking files, remove a considerable amount of metal at the rear end of the barrel where the base was removed, using as much pressure on the striking files as required; this may be easily accomplished after the necessary practise is obtained. The old name for these vixen files was Dutch planers, and you will find that they were well named after you become accustomed to their use and see the amount of metal they remove on work of this nature. The same methods apply to any barrel, regardless of whether it is a rifle or shotgun barrel, for removing dents and deep scratches which require complete refinishing before bluing. This is especially necessary on military arms when the barrels have been covered with wood, for it was not originally necessary to finish such barrels underneath the hand guards; therefore, it is essential to strike or draw-file them now to make a fine-appearing sporting arm.

On all Springfield military barrels it is necessary to fill in the spline cut on the upper right-hand side, which is half a radius left when the sight base is removed. This is a pin which is placed half-way in the barrel and sight base for an anchor, so that the base cannot turn on the barrel. The cross-pin slot can be left in; this does not show, as it is directly on the bottom of the barrel. Drill the top spline cut with a series of four holes, using a No. 29 drill. Only drill deep enough so that it will be possible to catch three or four threads, tap these out with an 8 x 36 tap; then apply a screw of the same tap size, cut it off about $\frac{1}{16}$ inch above the barrel, and so on until the four screws are in place. Then peen these over flush with the barrel, and after it is filed and polished it will not be apparent that it was filled in.

Draw-filing — The file needed for this operation is either a wide 10- or 12-inch mill file. These are made by such firms as Disston or Nickelson in this country, and by the British or Swiss abroad. A wide file is the most essential kind, as it follows a straight, well-directed movement of the arms upon the cylindrical surface of the barrel; therefore it removes the light spots left by the striking files. It is well to keep the file chalked on both sides, and as often as you knock the file free of chips, again go over the surface with chalk. Applying chalk to the surface of a file prevents the steel from clogging in the teeth; when bunched-up metal is deposited in the cuts, it causes deep scratches on the surface which are difficult to remove and are not discovered until the final finishing takes place with the emery cloth.

A file card should always be handy for removing metal deposits in the teeth. A file card is made by inserting short stiff wire into leather, and tacking it to thin pieces of hard wood with a handle formed on one end for convenience. A similar card is used in textile mills to pick wool apart, except that those used in machine shops have short stiff wires projecting through the leather, whereas the mill cards have longer wires.

The barrel is either clamped between felt jaws in the vise or held in the brass barrel holder with the vise swung at the most convenient angle—about 45 degrees—so that the barrel will be in front of you. The striking files were used in the manner of a wood plane, but now the file is held in both hands in a horizontal position or at right angles. Each stroke is taken the full length of the barrel, maintaining a very slight pressure on the file. It is not necessary to bear down much, for a new file which has only been used for draw-filing will remove enough metal almost by its own weight to complete the most satisfactory job. A little practise will teach you the right pressure. Excessive pressure, just as in the striking operation, will result in flat spaces, which must be avoided. Each stroke of a file will remove a certain amount of metal, and when applied in the proper manner will reduce a surface in a surprizingly short time without any exertion. You will notice many men who habitually use a file with a disgusted countenance, making the operation anything but a pleasure. When you learn the art of draw-filing, particularly on a rifle barrel, you can scarcely notice any flat surfaces,

and what there are may be easily removed with the emery cloth or in the polishing or buffing operation.

Draw-finishing With Emery Cloth — This work is very similar to draw-filing, except that you will use emery or carborundum cloth in the medium and fine grades, which will be in grit sizes: No. 1/2, 1/0, 2/0, and 3/0 beginning with No. 1/0, and finishing with No. 3/0. Figure 94 illustrates an emery-cloth holder which can be made up and will make the operation a pleasure. This is made with four semicircular notches and a clamp to hold the emery cloth in position on any of the four sides. With the wing nuts for easy removal of the clamps, the emery cloth may be changed to any circle; or by making two sets of clamps, emery cloth can be inserted in all four circles.

If you so desire you may at first take a piece of No. 1/0 emery cloth, 1 inch wide by 12 inches long, and cross-polish the barrel. Such a performance with the emery cloth will show the small "flats" left by the file. As you grasp the two ends, work it rapidly up and down from one end of the barrel to the other. Turn the barrel one-quarter turn in the vise and repeat the operation until it is cross-polished completely. Then use the hand polisher lengthwise of the barrel as you did the draw-file. Different grades of fine emery cloth are used in this hand polishing up to crocus cloth. Draw-polish with emery and crocus to a degree which will completely eliminate all scratches. Now, insert a piece of thin felt, similar to that used with the rottenstone rubber in Chapter XII, Volume I. The felt is clamped in the largest semicircle in the holder, and then optical emery and powdered rouge are mixed in equal proportions—or any other polishing compound of a similar nature—with sweet oil added until a heavy paste is formed. The paste is then applied to the felt, and a complete draw-polishing is again done until a high and bright luster is produced.

In use of the draw-polisher on tapered barrels, the largest circles must be used to clamp either the emery cloth or felt. After having once begun to polish, do not lift the polisher from the work, but continue with even strokes the full length of the barrel—particularly when using the felt pad with polishing paste.

To use the draw-polisher which Figure 94 illustrates, grasp the handles in both hands and use it as you did the draw-file, but always continue the strokes the full length. Never lift it off the work, for if you do there will be small scratches left; this does not matter with the roughing operation, but on the complete finishing, every care must be used. Try to finish the part with a high luster.

After a piece of steel is polished with a polishing paste to which oil has been added, a greater amount of cleansing is necessary because the oil penetrates into the pores of the steel. This has been thoroughly explained in Chapter XVI, and the student is now again urged to use special precaution on this point.

Emery cloth which has been worn should always be saved, particularly the finer grades, for these pieces contain enough abrasive to give steel parts a very good polish. Such emery cloth can be used with the draw-polisher when oil is applied to the cloth. Do not apply the oil until it runs off the steel, but use just enough so that the parts will have a very good film all over. Continue to draw-polish with worn emery cloth until you have a high luster; this can easily be detected by wiping a small spot on the steel surface and observing the appearance of the metal. When the steel is polished to your satisfaction, use the worn pieces of crocus cloth in the same manner and you will have a finish equal to that of any buffing operation. Of course, such operations require time and patience, but the beginner can accomplish all of these operations without power equipment, not only on barrels, but on actions, receivers, guards, floor plates, trigger guards, revolvers, pistols, and all small parts on either rifles or shotguns; on these, similar methods, as outlined in regard to barrels, should be applied. Revolvers, automatic pistols, and rifle receivers require various methods to get into the odd cuts, radii and corners, and also into the interior of actions or any places where it is impossible to use ordinary means.

Power Polishing — There are many varieties of polishing wheels. The type used depends upon the class of work. A wheel which I commonly use for flat work is the rubber wheel previously described. Different grades of emery are glued to the surfaces —Nos. 90, 100, 120—the grade depending upon the finish desired. These wheels are excellent for producing results on all classes of flat work, and because of their flexible nature I have found them superior to the walrus wheels. If one of the large rubber companies would develop polishing wheels of this type—not only the flat cylindrical wheels in different diameters, but smaller wheels with various semicircles or radii—they would have a large sale when their advantage over the walrus and leather wheels became known. By moulding these in a die, a fine corrugated surface would be possible in the rubber to hold the emery and glue in place. These wheels are used mostly for roughing special shapes, and when the finer abrasives are used very good finishes are produced. The solid canvas

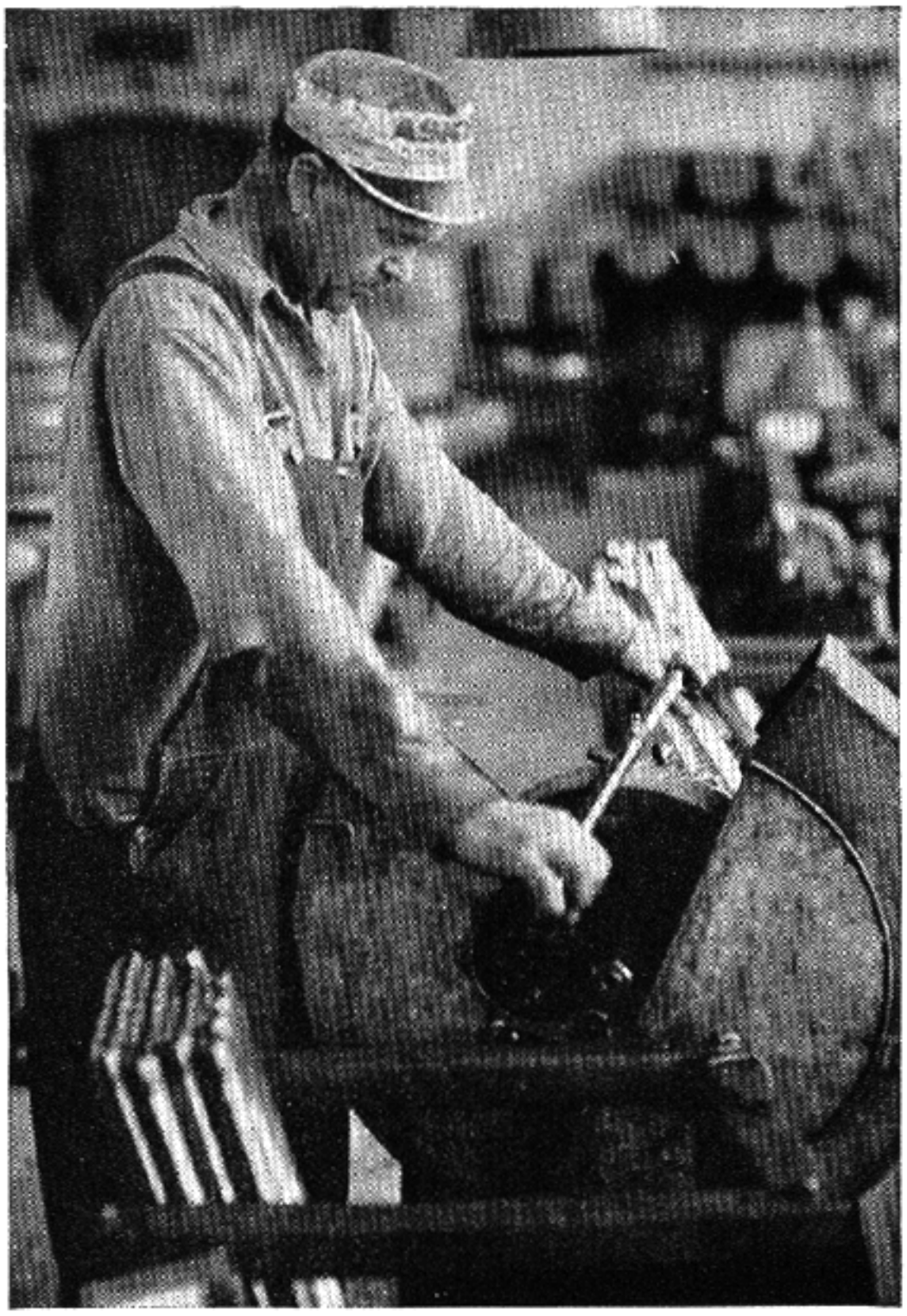

Fig. 95
Polishing surface of barrel to remove tool marks, as done in the large arms plants. The polishing wheels revolve at a moderate speed. This operation is known as "spinning"

wheels such as those made from canvas belts also give good results when fine emery is glued to the surface.

Polishing operations are usually known as "roughing," "dry-finishing," "finishing," or "oiling." The abrasive numbers used for most gun parts and for roughing ordinarily range from 80 to 100; for dry-finishing, from 90 to 120; and for finishing from 120 to 150 and also 150 to XF. For roughing and dry-finishing the polishing wheels are used dry. For finishing, oil, beeswax, and tallow are used on the wheel to produce the finish. Dry emery is seldom used by the gunmaker, as all abrasives are glued to the surface of the wheels; but in finishing, when a paste is used made from beeswax or tallow, it is first applied and then the wheel is put into operation.

Walrus wheels are used when a high polish is desired; however, they are expensive and it is much better to buy a piece of hide and make your own wheels. These are the only wheels that can be used on gun work requiring special forms. Felt wheels are made from Spanish and Mexican felt and are also used extensively for finishing.

Grain Numbers of Emery — The numbers commonly used in designating the different grains of emery, carborundum and other abrasives are: 10, 12, 14, 16, 18, 20, 24, 30, 36, 40, 46, 54, 60, 70, 80, 90, 100, 120, 150, 180, and 200, ranging from coarse to fine. The numbers represent the number of meshes per linear inch in the grading sieve. An abrasive finer than 200 is known as "flour" and the degree of fineness is designated by the letters EF, F, FF, FFF, FFFF, and PCF, or SF, ranging from coarse to fine. From the foregoing classifications the student will be able to form a general idea of what he will require for any of the polishing operations mentioned in this chapter.

Buffing and Polishing Compositions — These compositions are in the form of a stick or cake of compressed tallow or other heavy grease containing some polishing material, such as tripoli, crocus, rouge, flour emery, Turkish emery, Vienna lime, etc. When Turkish emery is used, and rapid, sharp and even cutting is required, the grit numbers used are 120, 140, 150, 180, and 200.

When gluing emery to the polishing wheels, heat the glue, thin it to the consistency of a light oil, and apply it to the surface of the wheel. After clamping a round piece of steel in the vise, the wheel can be placed upon this, and the emery sprinkled upon it; a large-sized pan should be underneath to catch the surplus emery. When the surface is completely covered, remove the wheel and roll it on a clean smooth board so that the emery will be well rolled into the glue upon the surface. A very effective method is to take three sewn-muslin wheels and remove the two outer circles of stitches. Then coat the outer surface and the spaces between the layers of cloth with coarser emery and apply the glue, sprinkling the emery in the same manner as described but working it well into the layers of cloth where the glue has run. Such wheels are used on actions and receivers where odd forms are hard to get into with other wheels in the roughing operation.

When making walrus wheels, it is better to make a number of different sizes and shapes. These should be made in different diameters and sizes for use on a small electric motor. One of these motors may be purchased for about $8 with the tapered spindles for attaching the wheels. The taper is threaded up to the shoulder, and when the polishing wheels are attached to the spindles they always run true. A dental polishing motor can be converted into a buffing and polishing motor for small

parts. One side of the electric grinder can take different-sized wheels, and it is surprizing to see the number of different wheels you will use on such a motor to solve all the polishing and buffing problems, from using the wooden disc with sandpaper on the face for sanding, to the sheepskin wheels for fine buffing.

The muslin wheels are used more than any other. Those of an 8-inch diameter are best for all gun parts, from roughing operations with emery and glue applied to the surface, to the fine buffing with rouge worked in from the stick, or when powdered rouge and oil are mixed as a paste. The cloth wheels are the only ones that can be purchased at a reasonable price. They are used so extensively because of their soft yielding surface, into which the work can be pressed so that the curves and corners of actions or any other irregular-shaped parts can be buffed or polished. In the use of these wheels as buffs, with rouge or tripoli, a very highly polished surface is the result. There are many varieties of wheels on the market, but it will be best for the beginner to use the wheels and methods I have outlined rather than to experiment upon wheels which may never prove satisfactory for his needs.

If you should purchase one of the small utility polishing motors, turn up a number of tapered hard wooden plugs, as for polishing small radii and curves where it is impossible to polish in any other way. One end is bored out on a taper to fit the tapered spindle and the other end is turned to a pointed taper to take the abrasive material. The tapered end is covered with fine felt which is glued on; rouge or fine optical emery paste is used to buff and polish in small corners, such as on springs, sears, triggers, etc. Larger wooden spindles are made and covered with felt to polish and buff the inside of trigger guards. You will find in time that you have a great variety of these on hand for all small parts.

When emery alone is glued to the taper, score the surface of the wood with the scoring tool, lengthwise, so that the glue and emery will have a corrugated surface to adhere to.

Problems of Polishing — When you first begin to use buffing wheels you will find that you have done a number of wrong things such as trying to polish out deep scratches by buffing, when you should have used a polishing operation with fine emery glued to the proper form of wheel and then completed the final buffing with rouge or tripoli worked into the correct wheels. You will find that each particular job presents its own problem but after you become accustomed to each one you can always apply the same rules as to other parts similar in nature.

When refinishing a rifle, first remove everything from the arm—even the barrel from the receiver if you have the proper means. Begin with the barrel, as this is the largest metal part, and if it is a military arm, leave the front-sight base attached and polish this together with the barrel. Of course, if you have a barrel band it will be necessary to remove this and polish it separately. When setting it back in place, make special pins with rounded heads instead of the flush pins; for after these are removed it is difficult to place them back in position, especially on the Springfield M/1903. When leaf-sight bases or ramps are soldered to a barrel the surplus solder may be removed with a circular wire wheel on the motor. It will only be necessary to buy a small one for this operation. If you do not have electrical connections or a motor, coarse emery cloth will answer the purpose.

A fine circular wire wheel is also a valuable addition to the polishing and buffing department. You not only use such a wheel for the removal of rust for the bluing operations, but it can be used for a number of operations; the polishing of nickel-plated revolvers, the complete removal of rust from metal parts, and a number of operations such as on receivers before polishing takes place to remove the old bluing, etc.

Barrels and parts should be completely polished before any additions are soldered on, such as ramps, sling-swivel bases, sight bases, etc. After soldering, remove the solder left on the barrel or parts, as previously described, and then complete the buffing operation. Be sure to see that no solder remains on the parts. This will be easily detected by the colors of the two different metals: One will be dull and the other bright. This may go unnoticed at times, but if you are a very keen observer you will correct such faults before the bluing is attempted. To remove solder along the edges of ramps, sight bases, etc., make a three-cornered scraper from an old three-square file, by grinding down the point; or you can also make a flat scraper from an old hack-saw blade or a flat file ground in the form of a scraper.

Receivers of rifles are naturally the most difficult parts to polish because of the various curves. Muslin wheels with fine emery glued to the layers of cloth generally solve those problems and the same kind of wheels can be used for the buffing operations as described. When hand work is necessary on such parts, emery cloth is the only solution and is used in different ways, such as folding the cloth around different shapes of files to get into the corners. Pieces of hard wood in various forms,

with the emery cloth glued on, and sticks with thin felt cemented on and rouge paste, will also serve.

Guards must be polished inside the curve with fine emery cloth placed on a half-round or round file of wood shaped to fit the curves, with the felt and paste. Flat surfaces are the most convenient to polish, for flat files and emery cloth can be used altogether in a lengthwise direction. Automatic pistols and revolvers are among the most difficult to polish by hand, for you run into the same difficulties as on receivers; but when care and patience are exercised on the easy parts or flat sections, you will find that in the course of time satisfactory results are produced. The greatest difficulty is to hold revolver parts securely, especially the small parts of thin plates, etc. Therefore, you must not only provide suitable clamping fixtures for the vise, but make special ones from wood as well.

The most essential thing to remember when polishing any of these arms is always to polish in the direction of the profile cuts. When refinishing an arm, polish the inside working parts as well. Bring them to a high luster, but be very careful not to round the edges of any of the mechanism. The inside working parts are rarely finished as we see them on Smith & Wesson revolvers; a favorable impression is received when a revolver or any arm is opened and all the working parts have a bright and polished surface. I believe that in time the public will demand all this much-needed improvement. When polishing any parts such as these, work in one direction, for cross-polishing only tends to dull the surface. This rule naturally applies to all polishing operations.

Polishing Bolts — When polishing these with power and the circular buffing or polishing wheels, the problem is very simple; but by hand it is rather a difficult one, especially on the Springfield or Enfield, which have been Parkerized, causing a rough finish. Remove the extractor and extractor collar and polish them separately. Clamp the bolt in the most convenient way in the vise, using either felt or lead jaws. Coarse emery cloth may be used, such as No. 0 or ½, until the old finish is completely removed. At first you must do some cross-polishing around the bolt handle and knob with abrasive cloth cut in strips of ½ inch or wider, then completely cross-polish with fine emery cloth and oil. When finishing these parts it is much better to use the worn cloth and oil, as it gives a far better finish than the new emery cloth and oil. To polish in the corners fold the cloth around a file or a wooden stick. When the roughing operation is completed, the bolt proper must be draw-polished lengthwise with oiled emery cloth, which will bring out a highly polished surface. When all this is completed, finish to a high luster with strips of felt soaked in rouge paste or optical emery and rouge mixed into a paste. A much higher luster may be obtained by using a dry piece of felt and rouge powder; this is the so-called dry-finish. When finishing a bolt with the polishing and buffing wheels, it is only a matter of obtaining a very fine surface with the muslin wheels, using emery paste, and for the roughing-down operation rouge or tripoli.

Be very careful not to polish down or remove any metal, particularly around the lugs where the extractor works in, or you will be unable to eject the shells. Another place requiring care is at the rear of the bolt lugs. It is much better to avoid using any abrasive here whatever, for you might remove too much metal, causing an excess amount of head space or rounding the lugs so that only the center has a bearing. This will cause the bolt to set back into the metal and cause excess head space and difficulty in opening the bolt upon extraction.

Polishing Shotgun Barrels and Parts — The student will run into greater difficulties in the refinishing of shotgun barrels, for on some of the old barrels Damascus and laminated steel has been used. When such barrels are draw-filed, polished, and buffed to a high luster, they must be "eaten up" again—a process described in Chapter XVI. The plain steel barrels such as the Whitworth, Krupp, or standard fluid steel, are finished the same as the regular rifle barrels, except that here is a greater amount of work to perform, due to the upper and lower ribs of double barrels and ventilated ribs on single trap guns.

When working on double guns make special wooden sticks to polish in the sharp corners of the ribs. Be careful not to reduce any of the matted surface on the top rib. Shotgun barrels may be given much better treatment by hand than with power buffing or polishing, when a matted rib is on such a gun; but if it is just a plain rib, the power can be used to advantage, provided you are able to keep sharp edges on the ribs and lugs. The amateur will show better judgment if he will finish the barrels by hand rather than to trust to power finishing.

Shotgun actions are usually engraved and case-hardened, except the cheaper ones; these do not have any engraving, but are generally hardened by the case-hardening method for colors. It will be much better to leave these alone except when you anneal them to rework the action and fore-end arm completely; this will be taken up further on. Nearly all the finishing is done by hand, for a power

polisher or buffing operation would remove the sharp corners.

There is a considerable amount of refinishing to do on any shotgun if it is not of the best grade. When any action is taken apart, examine all the working parts regardless of make or kind. You will find that the sears, tumblers, springs, triggers, etc., can be greatly improved upon and all these parts given a high luster such as we find on the best British guns. Examine the Westley Richards detachable locks; you will find that the finish is very like that on the inside of a watch. The same effect may be produced by the method known as damaskeening—described in Chapter XXII, Volume I.

Of course, the amateur will not be able at first to measure up to the British standard, but he can obtain finishes which will be a credit to his ability. The sears are usually a neglected part on American shotguns. The engaging points which fit into the notches should not be touched unless you wish to reduce or add to the trigger pull; if this is the case, they must be worked over with a fine oilstone. The sears must be polished with the small tapered spindle polisher if you have a small motor. If it is to be done, use fine emery cloth and small files to hold the cloth, or other means that will produce a high finish. Triggers may be polished on the tapered wooden polishers, and for the flat sides glue fine French or Turkish paper to the small wooden disc set on the small polishing motor. The tumblers may also be polished in this manner, as the fast-revolving disc with the fine emery paper attached removes but a slight amount of metal and gives a flat surface a very high luster. Flat parts may be polished with the wooden disc; it is surprizing to see how complete a finish this method produces. The pressure that will give the most satisfactory and accurate results, when flat surfaces are held against a disc, depends upon how you hold the part and the nature of the work.

Small parts, such as screws, pins, special small parts, etc., should have special holders to fasten them so that a satisfactory job may be done. It is difficult to hold a flat piece against a disc polisher, and the only method which can be used to polish a screw is to make a holder as illustrated in Figure 14. Set the head into the counterbored part slightly above the surface and clamp the wing nuts; then hold the fixture against the disc very lightly, and produce a flat, polished surface on the head. By trying to hold the screw in a holder with the head projecting over the holder, you have a surface which is off on an angle. On most screws the heads are more or less marred, and this is usually because of the efforts of some one trying to remove them with poor screw-drivers not fitting the slots; badly marred heads must be reworked and repolished by the method outlined. Rounded screw heads must be polished either in a lathe or a drill press, first filing them to remove the burrs left by the screw-drivers, then holding the fine emery cloth or paper on your finger-tip until the head has a finely finished surface.

Vise Clamping — When parts are clamped in the vise for polishing, great care and judgment must be used, because of the nature of some parts. One essential point is to protect all parts from the vise jaws; this is just as important as using forethought when clamping parts that are thin and liable to spring and be ruined, between padded vise jaws. Lead jaws are one of the most useful accessories for a vise and an essential part of a gunmaker's equipment. Next come the felt jaws, altho these are made more for softer material such as wood and blued parts, which are easily marred if clamped in any other manner. Sheet brass and copper follow for some of the larger metal parts. Leather can be glued to wooden barrel staves or thin gumwood and used as vise jaws. The main thing is always to keep in mind the proper clamping methods when polishing any metal parts in a vise, and to provide material and means most suitable for the work you are doing. Always look ahead to see that you are using the correct locations on the parts so that you will not spring or damage them. There is usually a way out when mistakes are made on wood work, but when you spring or crack a receiver you can only purchase a new one.

The polishing and buffing of steel parts requires considerable experience before you reach the point where you are capable of producing a fine and even-grained finish on them.

I have not touched upon the subject of a buff finish on nickel-plated parts, or the finish given to chrome-plated work, or even the brass you find on antique arms; as so little of this work is done, I did not deem it necessary. Your problem is to secure a luster upon steel parts of the more modern arms, and if all instructions are followed out you will undoubtedly be pleased with the results of your hours of labor. Then, if you have completed the interior of the firearm equally well, you will be proud to say it was through your own efforts that it appears as it does.

Here are a few rules which should be remembered when polishing by power or by hand:

1. Polishing wheels should be kept in perfect balance and running true at all times. A wheel out of balance wastes time and will not do good work.

2. When using a file as a holder for emery cloth,

care should be taken to wrap the cloth around the file two to four times, so that the file teeth will not break through and cause deep scratches. That is the reason wooden holders are best.

3. When choosing wheels for either polishing or buffing, select them for the particular work you are about to accomplish. As in grinding, only the wheels best adapted for that purpose should be used.

4. Scratches will magnify greatly through the bluing—those who place a "Pittsburgh finish" on a firearm will be surprized to see how the bluing will show this finish up. A luster free of scratch produces the best bluing on any metal.

CHAPTER XVI

The Art of Bluing and Browning

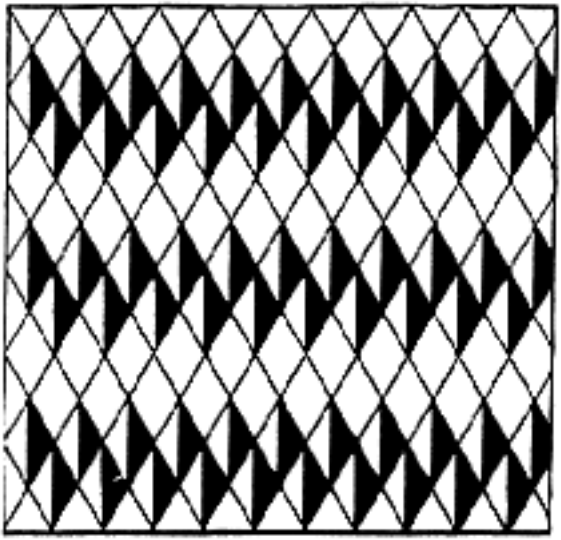

CHAPTER XVI

The Art of Bluing and Browning

THE primary object of bluing and browning is to dull the bright color of the barrel and other metal parts exposed to the sight of game. It does not entirely prevent the metal from rusting, but rust will not attack the steel thus treated so readily as if left in a bright condition. A well blued or browned rifle or shotgun is as pleasing to the eye as a well-groomed person. When a weapon so treated is displayed to a group of men and commented upon, a question arises in the minds of the more curious as to just how the lustrous blue-black finish is obtained.

The first consideration in browning or bluing is an analysis of the metal and of the heat treatment to which it was subjected. You would not expect the same result on a hardened piece of steel as on a soft piece, even tho these were fastened together and one solution used for both. It is necessary to mix the solution for more strength when bluing or browning a hardened piece of metal. One will find the low-carbon steels easiest to blue or brown with any of the solutions used for this purpose; the high-carbon steels, together with the alloy steels, come next. The case-hardened or heat-treated alloy steels are the most difficult, but become fairly simple when the right solutions are learned.

There are various methods of bluing and browning, such as the several acid processes, bluing with the potassium nitrate bath, bluing by charcoal and charcoal gases, pack-hardening with charred bone and other animal substances in cast-iron boxes, and the cyanid bath. The latter subjects will be treated in separate chapters. The beginner, making a thorough and individual study of this subject, will find that a fundamental knowledge of chemistry is very useful in working out many of these problems.

The word "browning" is the original British term for the process of producing color on steel or iron with acid. "Bluing" is more universally used and is technically correct. One very seldom sees nowadays a really brown finish on a firearm unless it is an antique. However, the British still use the term browning even tho the metal is blued. In this chapter I have described both processes so that the student may use either, according to his fancy.

Another process is Parkerizing. This is the method in which the service Springfields are finished; it is efficient and highly rust-resisting. Parkerizing, briefly described, consists of sand-blasting and boiling all parts to be finished in a solution of "Parko Powder" composed of specially prepared powdered iron and phosphoric acid. In the process minute particles of this powder are deposited on the metal and dissolved. The result is a dull non-reflecting finish, which, while less attractive than bluing, is far more practical from a military standpoint. It is possible, however, by buffing the parts with various oils, to produce a soft gloss that is more attractive. This method is far too cumbersome and expensive for the beginner, who only has a small amount of bluing to do from time to time.

The large arms plants have a separate department set aside for this work. When using the rusting process for bluing they have cabinets so arranged that the air is kept at an even temperature and is saturated with humidity. Special processes allied to the Parker method are also used.

If the methods outlined are followed carefully, you will be able to secure results similar to those of factories with modern equipment. They should be economical, enabling you also to use them with equal efficiency in both summer and winter.

In purchasing a supply of chemicals, I would suggest that you choose for each method those which answer your purpose most satisfactorily. Have a wholesale drug house or your local druggist supply your needs. If, however, you wish to experiment with more than a few of the formulæ, you will find the following list of chemicals very helpful. They form the principal bases of all.

Aqua regia	Binoxalate of potassium
Verdigris	Potassium nitrate
Sulfate of zinc	Bismuth oxychlorid
Vinegar	Tincture of ferric chlorid
Salt	Hydrochloric acid
Sal ammoniac	Nitric acid
Gallic acid	Alcohol—pure grain spirits
Corrosive sublimate	Cupric chlorid
Ferric chlorid	Sweet spirits of niter
Copper sulfate	Ferric chlorid
Distilled water	Caustic soda "cleaning"
Sodium nitrate	Lime "cleaning"
Nickel carbonate	Benzine "cleaning"
Sulfur	Black oxid of manganese
Ferrous chlorid	Ferrous sulfate

With the above it is necessary to have a scaled measuring glass, glass funnel, glass mixing receptacle, glass mixing rod, and blue or brown bottles. A complete equipment should include three galvanized tanks, one three-burner gas stove, or a specially-built gas arrangement to take as many as three tanks. A small motor that will carry a fine steel wire circular wheel at least 7 inches in diameter should be nearby. The galvanized tanks should be made 5 inches wide and 5 inches high, the length being governed by the longest barrel or part which is to be blued—42 to 44 inches is very convenient. Mark the tanks Nos. 1, 2, 3; tank No. 1 to be used for the caustic soda solution, tank No. 2 for the lime, and tank No. 3 for hot water and bluing the work with the quick-method process, for boiling the barrels, and as a means for securing the required humidity to rust parts. On each end of all three tanks have good-sized handles for moving off the gas stove and in cleaning. On tank No. 3 have a lid, cone-shaped, with a rod fastened in the center on the under side the full length, so that the hooks can be fastened to it and to the work. On the lid have also four pieces of flat stock fastened one on each corner, projecting from 10 to 15 inches from the bottom of the lid so that when this is placed over the tank there will be an opening of 12 inches between the lid and top of tank. The object of this hood is to get the required humidity from the steam that comes off the water, rising to the cone-shaped lid where the work is fastened. The water only needs to be heated to generate enough steam to saturate the air with moisture. By all means avoid having too much of the latter, or it will condense on the work. After a few parts are blued in this manner, one can easily regulate the required humidity to secure proper results.

Before any barrel, either old or new, can be blued, it must be highly polished and absolutely free from oil or grease. It is advisable to wear clean cotton gloves throughout the operation to prevent the hands from touching any part of the work, for as we know, the skin contains oils and acids which react chemically.

If the work upon which you are engaged is a rifle or shotgun barrel, grease or oil the inside well and make suitable wooden plugs of hard maple. The plugs should be at least 1 inch in diameter and long enough to act as a handle. Turn these to a shoulder, six-thousandths of an inch larger than the groove or bore diameter. Remember to allow for these plugs when constructing the tanks.

If a plug is for the muzzle of a barrel, turn it to the required groove diameter, 2 inches long. Grease well and drive in, allowing over ½ inch between the muzzle and shoulder of the plug so that the muzzle can be blued as well as the rest of the barrel. The one for the chamber should be turned the same form as the chamber, allowing oversize to drive in place. Both should project enough to form handles. When such precautions are used, there is no possibility of the acid reaching the inside, to ruin rifling or chamber.

When the barrel is thus prepared, saturate a clean cotton rag with benzine and wash the work to remove all oil or grease before placing in the tank of caustic soda. In tank No. 1, place 3 inches or more of water. Let this come to a boil, and add a sufficient amount of lye or caustic soda in the water to form a very strong solution. Place the work in the solution and allow to boil for ten minutes, removing all grease and oil. Remove and rinse with hot water. In order to handle work conveniently, make two hooks from ⅛-inch cold-drawn steel. When thus prepared the metal is free to take the solution evenly. These solutions may be used again at some future time, so it would be well to make flat lids for the tanks to protect the solutions from dust and evaporation.

Before using tank No. 3, wash it well, first with caustic soda and then with some of the lime solution from tank No. 2 to remove all traces of grease and oil. After rinsing well and filling with clean water, it is in readiness for the bluing operation.

Before beginning there are a few cardinal things to be remembered. As mentioned earlier in this chapter, all steels are not alike; we refer to them by different nomenclature. There is low-carbon steel, which includes cold-drawn and machinery steel; there is high-carbon steel, also called tool steel. The alloy steels contain nickel, vanadium, chromium, manganese, and tungsten. When varied steels are treated, the formulæ must be changed by adding to or diluting the solution for oxidizing.

Low-carbon steels are simplest to blue when heat-treated by pack-hardening or the cyanid bath.

If the acids are unsatisfactory on the cold metal when applying any of the solutions in the so-called ten-day processes, which are described later, heat the parts in water or in tank No. 3 to about 160 degrees. If they are still unsatisfactory, increase the copper sulfate, or add such acids as hydrochloric and nitric. This problem is very simple for a chemist to solve when the bases of the formulæ are worked out, but with the average man, patience is required to accomplish such results. I have endeavored to compound these formulæ precisely, so that no trouble will be experienced when using them if all directions are followed carefully. In my own experience it took a number of years of painstaking work to perfect them. Many a problem encountered by the beginner can be solved merely

by adding to the solution a grain of common sense.

BLUING SOLUTIONS

Formula No. 1 — Quick Method or Hot-solution Process —

1st	750 gr.	(avoir.)	corrosive sublimate
	1000 "		potassium chlorate
	1200 "		potassium nitrate
	300 "		ferric chlorid
	150 "		cupric chlorid
	300 "		sodium nitrate
2nd	1700 cc.		distilled water
3rd	175 cc.		sweet spirits niter

Weigh out the first six chemicals, placing them in a glass receptacle or glass jug. Heat the 1700 cc. of distilled water to 130 degrees Fahrenheit. Pour into the glass receptacle and keep agitating until all chemicals are completely dissolved. Let cool. After ten hours, add 175 cc. sweet spirits niter. Place in blue or brown bottles. Shake well before pouring into bottles and let stand twenty-four hours before using. Label bottles POISON.

Directions for Use—This is one of the finest formulae for quick-method bluing. It only requires one hour to complete a rifle and will produce a fine blue finish if directions are carefully followed. It can be used for almost any steel. Naturally, variations will take place when it is used on heat-treated parts.

After the work is prepared, place 3 inches of water in tank No. 3, rain or distilled water preferred. Rain water should be secured if at all possible. The chemically treated water encountered in all cities has various deleterious effects on the bluing operation and at times the finish will be streaked with gray.

Secure a heavy eight-ounce bottle with a large opening at the mouth and attach a wire around the top. Fasten it in one corner of tank No. 3. Locate it at the most convenient end to work from and let the bottle rest on the bottom of the tank. Pour four ounces of the above solution in the bottle, allowing the work and solution to boil together. Be sure that no water enters the solution while the operation is in process. Make a swab of 1-inch gauze bandage on a clean maple dowel or stick, slitting the end with a hack-saw to anchor the swab.

Have two wooden blocks made with notches cut out in the center so that the wooden barrel plugs may rest in these cut-outs while applying the solution or carding off the rust. If you do not happen to have, for the next step, a motor with a circular wire wheel attached, use No. 2/0 or 3/0 steel wool or a fine carding brush for light burnishing. If steel wool is used, bunch and hold it so that only one part is used throughout the operation.

Place the metal parts to be blued in boiling hot water. Let remain between three and five minutes. Remove and apply a coat of the solution. Use even strokes lengthwise of the work. Let the heat of the barrel or parts completely dry the solution and place back in the boiling water. Let boil between two and five minutes. Remove and card off the rust and apply another coat of the solution. (To "card off" is to remove rust by means of wire browning brushes, steel wool or a circular wire wheel.) Repeat the operation between six and eight times. Each operation deposits a coat of stain or blue, and after the sixth or eighth application a very heavy coat is built up. After carding the last time give the work a coat of light gun oil—raw linseed oil—while still warm, to terminate further action of the solution.

Throughout this operation work very rapidly, both in applying the solution and carding off the rust, for the solution will take effect much better on heated steel. If too much time is lost when using the circular wire wheel on the motor, place back in the boiling water a few minutes before applying another coat. When using either steel wool or the carding brush, apply it gently and with light pressure. The same caution should be observed when working with the circular wire wheel. Remove the parts from the water with the two hooks made from ⅛ cold-drawn steel; each small part should have a wire attached so that it may be lifted from the water conveniently.

The secret of bluing small parts is to coat the surface as soon as the water dries off and place at once back in the solution. After removing the rust, place the part back in the boiling water, remove, and apply a coat of the solution, meanwhile keeping the swab in the solution until the very instant of applying.

When the several applications have built up a blue-black color, as dark as it will apparently become, rub it well with No. 3/0 steel wool and then with a clean cotton cloth. Use the fine steel wool and card on the matted surface. If the work is engraved, brush over very lightly, as this operation burnishes the surface and a velvet finish is secured. Oil as directed previously. Wipe off in a few minutes and rub beeswax and turpentine into the parts; rub until all traces of the oil are removed. This will produce a beautiful finish. (See formula No. 5, Chapter XII, Volume I.) Remove barrel plugs, wipe out the bore, and apply gun oil. The parts are now ready to assemble.

When this solution is used on parts where gold

inlay has been used, you will find that the gold has turned white, a change due to the action of mercury in the corrosive sublimate. To restore the bright gold appearance, dip a toothpick in raw nitric acid and rub over the gold. Care must be taken that none of the acid touches the parts already blued.

Variations for Formulas — When dealing with heat-treated or case-hardened parts such as Krag, Springfield and 45-70 Model 1873 receivers and lock plates, or shotgun actions which have been case-hardened, polish brightly and remove all traces of oil or grease by thoroughly cleaning with alcohol. Make a small swab from gauze bandage on a hardwood stick. Then rub over the hardened parts with nitric acid. When the surface of the metal shows a black appearance, wash in hot water before placing in tank No. 3 for the coats of quick-method bluing solution. In this instance the action of the acid on the surface of the steel is necessary to make it chemically receptive for the solution.

For some Stainless Steel it is necessary to mix a coppering solution as follows:

240 cc. distilled water
Add all copper sulfate it will dissolve
Then add 2 cc. sulfuric acid

Test by applying to a piece of steel, and if necessary, add a few more drops of acid. The surface should show a light copper coating. Wash parts in alcohol to remove all traces of grease or oil, and apply solution with a swab. Then apply a coat of nitric acid as given for hardened parts. Rinse well in hot water after the desired results are obtained, and proceed with the quick method of bluing. You will find that to blue these steels is rather a difficult operation; it will be necessary to lay on more applications than for the alloy or cold-drawn steels.

There are other slight variations of formula, but you have the base of one of the best. It is suited for all purposes where a quick process is required. Of course, the evaporation of the sweet spirits of niter takes place very rapidly when the operation requires too much time. When half finished, if the time required is more than anticipated, add a small amount of sweet spirits of niter to the solution left in the bottle. If you wish a deep black color, add more sodium nitrate to the ready-mixed solution.

Formula No. 2 — Simple Quick Method or Hot-solution Process —

800 gr. (avoir.)	corrosive sublimate
1200 "	potassium chlorate
1400 "	potassium nitrate
960 cc.	distilled water
120 cc.	sweet spirits niter

Weigh out the first three chemicals, placing them in a glass jug or other receptacle. Heat the 960 cc. of distilled water to 130 degrees Fahrenheit. Pour this into the glass receptacle and keep agitating until all chemicals are completely dissolved. Let cool. After ten hours, add the 120 cc. sweet spirits niter. Place in blue or brown bottles. Shake well before pouring into bottles. Let stand twenty-four hours before using. Label bottles POISON.

The same methods as those given in Formula No. 1 are used throughout the operation. These chemicals can be secured in any part of the world where you can find a drug store. The last-mentioned formula contains the base of all the quick-method bluing solutions placed on the market in recent years; they sell for $1.50 to $2.50 per 4-oz. bottle. Many gunsmiths and amateurs have used it and in most cases very successfully. If any difficulties have been encountered, they have been due to not recognizing the varieties of steel, negligence in freeing the parts from grease or oil, and a number of causes which seem trivial to the beginner, but which are nevertheless of great importance. If you meet with disappointment, try again, keeping in mind all the elementary instruction that I have attempted to bring to notice.

Formula No. 3 — Simple Quick Method or Hot-solution Process —

600 gr. (avoir.)	corrosive sublimate
1000 "	potassium chlorate
800 "	sodium nitrate
800 "	potassium nitrate
960 cc.	distilled water
120 cc.	sweet spirits niter

Mix the same as in Formulas 1 and 2. The sodium nitrate has been increased to produce a deeper black, and is similar to Formula No. 2. Both formulas are good for the student to practise with.

Formula No. 4 — Ten-day Rusting Process of Bluing —

1900 cc.	distilled water
180 cc.	tincture ferric chlorid
180 cc.	sweet spirits niter
30 cc.	nitric acid
800 gr. (avoir.)	corrosive sublimate
400 "	copper sulfate

Mix in order given and place in blue or brown bottles. Let stand for three days before using so that the chemicals will amalgamate.

Directions for Use—This formula is a ten-day rusting process. Prepare work by polishing, removing oil and grease as directed in the first part of the chapter. After boiling, remove and let cool slightly, and apply a coat of the solution with a

clean swab. Place the cover or lid on tank No. 3 in position. Fasten work to the rod in center of the top. Have the water warm enough so that the proper humidity will saturate the air under the cover and the work. Do not allow moisture to collect on the work, forming drops of water. If it is not possible to collect the required moisture, place a cloth around the tank and lid so that no humidity can escape. Let stand between eight and ten hours. Card off the rust with a circular wire wheel or No. 2/0 steel wool. Boil for about five minutes. Remove and let cool. I find it desirable but not necessary to do this, for each boiling neutralizes all chemical action of the previous application of the acid and gives the new coating of the solution a better foundation to build upon. Repeat this operation between ten and twelve days, twice each day.

Fine results are secured by applying Formula No. 2 first. Then give the work a three-day treatment, except to remove the rust more often as you have a body built up, making the rusting process take better effect. This method not only shortens the process, but you secure a wearing surface as tho the ten-day process were used.

Formula No. 5 — Rusting Process of Bluing —

960 cc. distilled water
90 cc. tincture of ferric chlorid
15 cc. nitric acid
220 gr. corrosive sublimate (avoir.)
110 " copper sulfate

Mix in order given and place in blue or brown bottles. Let stand for three days before using so the chemicals will amalgamate. Same instructions to be followed as in Formula No. 4.

Formula No. 6 — Rusting Process of Bluing —

300 cc. nitric acid
240 cc. hydrochloric acid

Mix the acids in a glazed stone jar out of doors. Add 600 grains of machinery steel chips which are free from oil or grease, or 600 grains of iron nails which have not been galvanized. Let stand until acid has completely dissolved the chips or nails. Then add to this mixture three quarts of distilled water. Place in brown or blue bottles and let stand three days before using.

Directions for Use—Clean the barrel or parts as previously described for quick-method process. After the final boiling, wash in clean water, dry and cool. Apply solution with clean swab. Place barrel in position on hooks in tank No. 3 as explained in Formula No. 4, or in a damp place for twelve hours. When a heavy coat of rust has formed, card this off on circular wire wheel or with steel wool. Boil in hot water for about five minutes. Let dry and cool and re-coat with the solution. Repeat this operation every twelve hours for ten days. After final carding, boil. Let dry and oil. When cool, apply beeswax and turpentine as explained in Formula No. 1. This solution works out best on cold-drawn steel, and the result will be a beautiful blue which will wear for years. This is one of the old formulas and when a barrel is completed with this finish it always commands admiration.

The following combined formulæ on the quick-method and rusting process of bluing are given for broader choice and for experimentation. The first six are the most reliable; however, the student should have others at his command to acquire the experience and perfection necessary to satisfactory development. As mentioned earlier in the chapter, if you have had a course in chemistry you will find this knowledge, even tho fragmentary, to be very useful. Combinations are possible, as for instance to compound the quick-method with the rusting process, as the chemicals I have listed are of such a nature as to impart color to metal when properly used. Those who wish to make a more exhaustive study of the subject may proceed from where I have left off.

Formula No. 7 — Rusting Process of Bluing —

90 cc.	alcohol
90 cc.	tincture of ferric chlorid
1300 gr. (avoir.)	corrosive sublimate
90 cc.	sweet spirits niter
45 cc.	nitric acid
800 gr. (avoir.)	copper sulfate
2000 cc. (2 liters)	warm distilled water

Mix in order given. Place in blue or brown bottles. Let stand three days before using.

Directions for Use—Apply solution with swab. After allowing to dry for twenty-four hours, remove loose rust with card or fine steel wool. The second coat is given in the same manner, after which the work is boiled in water and dried quickly. Boiled linseed oil, beeswax, and turpentine are applied to achieve a glossy surface and act as a rust preventive—1 part linseed oil, 1 part beeswax, 1 part turpentine. (See Formula No. 5, Chapter XII, Volume I.)

Formula No. 8 — A permanent and beautiful blue-black color may be obtained by using just enough water to dissolve two ounces of copper sulfate and then adding enough ammonia to neutralize and make it slightly alkaline. Test with litmus paper. The work must be heated before immersion. This was tried when I was at the Arsenal, but the

work was never carried far enough to see what results could be obtained on small parts.

Formula No. 9 — Rusting Process of Bluing —

135 cc.	alcohol
45 cc.	tincture ferric chlorid
660 gr. (avoir.)	corrosive sublimate
45 cc.	sweet spirits niter
450 gr.	copper sulfate
20 cc.	nitric acid
1000 cc.	distilled water

Mix in order given, and warm distilled water to 130 degrees Fahrenheit. Add copper sulfate and corrosive sublimate. Dissolve these solids and add liquids in order given.

Three treatments will produce very satisfactory results with this formula, carrying through the same routine given for other formulæ.

Formula No. 10 — Quick Method or Hot-solution Process —

50 gr. (avoir.)	corrosive sublimate
1800 "	ferric chlorid
470 "	ferrous chlorid
3 cc.	hydrochloric acid
1000 cc. (1 liter)	distilled water

Heat water to 130 degrees Fahrenheit, and dissolve all chemicals. Let stand for twenty-four hours before using.

Clean work as before and use the same treatment as given in Formula No. 1, but boil the parts for twenty minutes after each removal of rust. The treatment only requires three repetitions. This formula produces a very fine deep black.

Formula No. 11 — Quick Method or Hot-solution Process —

55 gr. (avoir.)	bismuth oxychlorid
112 "	corrosive sublimate
55 "	cupric chlorid
4 cc.	hydrochloric acid
15 cc.	alcohol
150 cc.	distilled water

Mix in order given. Treatment as described in Formula No. 10. Produces a very deep durable black on soft, hard, case-hardened and tempered steels alike.

Formula No. 12 — Quick Method or Hot-solution Process —

45 gr. (avoir.)	bismuth oxychlorid
10 cc.	hydrochloric acid
15 cc.	alcohol
100 cc.	distilled water

Mix in order given. Treatment same as No. 10.

Formula No. 13 — Quick Method or Hot-solution Process —

35 gr. (avoir.)	copper sulfate
110 "	ferrous sulfate crystals
25 cc.	ferric chlorid sol. 28%
1 cc.	hydrochloric acid
100 cc.	distilled water

Mix in order given. Treatment same as No. 10.

BROWNING SOLUTIONS

Next in order are the browning solutions, which give a butternut brown stain to steel parts, particularly to softer steels such as the cold-drawn and machinery varieties. We cannot help but admire the old method of browning such as is seen on well preserved shotguns with Damascus barrels.

When browning a rifle or shotgun, humidity of surrounding air will have an important influence on the action of the browning mixture, as is the case with the bluing solution. It is also important—and not hard—to determine the moment when the proper drying stage has arrived for the removal of rust. When applying the card or steel wool, if thoroughly dry, the rust will be eliminated quickly; if not dry, the rust will adhere firmly, and the surface of the barrel will look streaky. Some mixtures will dry in twelve hours or even less, but twenty-four hours will insure perfect dryness. Whenever you find a well-built-up coat of rust on the barrels, remove them from under the hood in tank No. 3 and allow them to dry away from their humid bath. A trial or two and you will sense the correct time during drying (which also means cooling) when the rust should be removed.

Browning or rust may be obtained very rapidly and well, by enclosing the barrels in a cabinet and subjecting them to the vapor of hydrochloric acid. The same results may be obtained by moistening the surface with diluted hydrochloric or nitric acid. There is another material sometimes used—chlorid of antimony. In using this substance, a uniformly smooth mixture is rubbed in with olive oil. This is spread upon the barrel, which is slightly heated, and then exposed to the air until the required degree of browning takes place. The operation of the antimony is quickened by superimposing upon it a thin coating of nitric acid.

The browning of barrels will take the student back to the days when Damascus barrels were considered the last word in metal staining. Today we still admire those fine old barrels with the beautiful twisted effect of the steels; the beginner will probably wish to secure the same effect. The characteristic bright wavy appearance of Belgian Damascus barrels is procured by direct chemical

action—a process termed "pickling." It results through dissolution of the softer metals as against the harder used in constructing the barrel. The preparation recommended is one pound copper sulfate dissolved in one gallon of distilled water at the boiling point. Continue to boil until the quantity is reduced about one-fourth. Then let it cool. Pour out into a lead vessel. Plug the barrels securely at both ends so that the liquid cannot penetrate into the interior. When the barrels are immersed in the solution it will act upon the metal in fifteen or twenty minutes. Remove and wash with water. If not satisfactory, immerse again until the operation is complete. Pour boiling water over them and scratch well with a steel brush or card, which will bring out the beautiful, bright, wavy luster. When laminated steel barrels are subjected to this operation, the results will be similar.

The browning of Birmingham shotgun barrels is done as follows: Dissolve as much corrosive sublimate as possible in a 6-oz. drinking glass full of alcohol. Mix this solution in one pint or more of distilled water. Combine a small quantity of this mixture with a little whitening and lay on the barrel rather lightly with a sponge. As soon as dry, brush off and apply a fresh coat. Proceed until the barrel is dark enough, which generally takes two or three days. This affects the steel so that the softer parts of the metal are a beautiful brown, and the harder portions remain light. The rusting process is neutralized by washing in hot water, after which the barrels are quickly immersed in cold water. The latter has the effect of heightening the brightness of both colors.

Formula No. 14 — Browning —

25 cc.	sweet spirits niter
140 gr. (avoir.)	corrosive sublimate
140 "	sulfur
15 cc.	sulfuric acid
25 cc.	tincture ferric chlorid
4 cc.	nitric acid
110 gr. (avoir.)	copperas
645 cc.	distilled water

Mix in order given. Allow to stand for eight hours before pouring into brown or blue bottles.

Treatment—Apply solution with swab after preparing as described in first part of chapter. Set away for twenty-four hours in cabinet or under the cover of Tank No. 3. At the end of that time a heavy rust will have formed over the barrel. Card off with circular wire wheel or fine steel wool. Then rub off with clean cotton cloth free from oil. If you find the brown not dark enough, cover again with the solution and set away for twenty hours longer. Remove the rust exactly as in the first instance, then if the color pleases, wash in cold water or with a wet cloth. Rub to thorough dryness and finish by rubbing with linseed oil to prevent further rusting. This application browns barrels beautifully and in the case of twist leaves the markings prominent.

Formula No. 15 — Browning —

30 cc.	tincture of ferric chlorid
30 cc.	sweet spirits niter
110 gr. (avoir.)	corrosive sublimate
6 cc.	nitric acid
60 gr. (avoir.)	copper sulfate
1000 cc.	distilled water (1 liter)

Mix the first three chemicals together, adding the distilled water, followed by all the other chemicals. Place in brown or blue bottles. Let stand one week so that all chemicals are thoroughly amalgamated.

Treatment—Prepare the work as already described. Apply the solution with a swab. Let stand two hours. Brush off with card. Repeat with four applications and let stand over night. Repeat following day every four hours, until the desired color is obtained. Wash with cold water and apply a coat of linseed oil.

Tincture of steel is difficult to obtain, so it may be necessary to make your own. First secure a stone crock. Place 1½ pounds of carbonate of iron therein and add 1½ quarts of hydrochloric acid. Stir until the acid has dissolved all the iron it can take up. Then pour off carefully into a glass bottle, being careful to keep out the sediment, and add three parts of pure grain alcohol. If one does not care to go to this trouble, the medicinal tincture of iron may be made to answer reasonably well.

Formula No. 16 — Browning Solution —

225 cc.	distilled water
225 cc.	alcohol, pure grain spirits
220 gr. (avoir.)	corrosive sublimate

Mix in order given. Place in brown or blue bottles.

Treatment—Apply with swab and stand in warm dark place until rust is formed over the whole surface; this will require, in warm weather, from ten to twelve hours, and in cold weather, from fifteen to twenty hours. Card off the rust and clean with a cloth free from oil. Repeat the process until the brown color pleases, for each coat produces a darker shade. This is one of the best formulas made in a simple manner for the common cold-drawn steels. It also works very well on the Winchester, Remington, Savage and other arms of a similar nature.

Formula No. 17 — Browning Solution —

480 cc.	distilled water
430 gr. (avoir.)	copper sulfate
30 cc.	sweet spirits niter

Mix in order given. Place in brown or blue bottles. Let stand three days before using.

This is a very simple formula, and produces very good results. Proceed as in Formula No. 13.

Formula No. 18 — Browning Solution —

50 cc.	alcohol, pure grain spirits
50 cc.	tincture of ferric chlorid
600 gr. (avoir.)	corrosive sublimate
50 cc.	sweet spirits niter
430 gr. (avoir.)	copper sulfate
10 cc.	nitric acid
500 cc.	distilled water

Heat the water to 130 degrees Fahrenheit, and pour over the six chemicals as mixed in the order given. Place in brown or blue bottles. Proceed as in Formula No. 13.

Formula No. 19 — Browning Solution —

180 cc.	sweet spirits niter
30 cc.	alcohol, pure grain spirits
50 cc.	tincture ferric chlorid
50 cc.	tincture gum benzoin
600 gr. (avoir.)	copper sulfate
1500 cc.	distilled water

Heat the distilled water to 130 degrees Fahrenheit. Add the copper sulfate and completely dissolve. Add this to other chemicals. Mix in the order given and let stand for five days before using. Place in blue or brown bottles. Proceed as in Formula No. 13.

Formula No. 20 — Brown Tint for Iron or Steel — Dissolve in four parts distilled water, two parts crystallized chlorid of iron, two parts chlorid of antimony, and one part gallic acid. Apply the solution with a sponge to the parts or barrels, letting dry in a warm place. Repeat the process according to the depth of color desired. Wash with warm water and dry. Then rub over with boiled linseed oil. The metal receives a brown tint and resists moisture. The chlorid of antimony should contain as little acid as possible.

Most browning and bluing formulæ are preserved as trade secrets by gunsmiths for reasons of protection and because of the fact that an air of mystery enhances the selling qualities of the project. It appears absurd to me when I think of one man preventing another from accomplishing an object by withholding from him the foregoing simple formulæ, which at any time could be uncovered with little effort.

The foundations of the formulæ are laid with the idea of a number of diverse approaches and the formation of solutions all of which will oxidize the surface of steel and iron. They are compounded in such a manner that one may carry out a great variety of work, not only for firearms, but for any other metal articles which require coloring.

After the reader has experimented with the various formulæ, he will be able to compound some of his own which may be suited to some particular work he wishes to do. At times the patience of Job is required, but this quality, combined with persistence, will in the end obtain the results he is after.

MISCELLANEOUS FORMULAS

Heat Methods of Coloring Metal — There are a number of methods used to secure, by heat, the blue color which has a lasting durable finish. Others are just a quick method to color small parts.

Formula No. 21 — Niter Process of Bluing Steel —

8 lbs.	potassium nitrate
1 "	black oxid of manganese

This mixture is heated to a temperature of 700 degrees Fahrenheit. The parts to be blued are polished and cleaned to remove all traces of grease. Immerse them in the molten nitrate and manganese. Let remain until a uniform color of the desired shade is otained. The articles are then removed and plunged immediately into warm water at a temperature of 110 degrees Fahrenheit. Dry in fine sawdust and apply a coat of heavy cylinder oil. Bake in an oven at a temperature of between 300 and 350 degrees Fahrenheit from five to eight minutes until the black finish is developed. If you wish only a light blue finish, dip the parts in a light paraffin oil before baking.

When placing work of this nature in the oven for baking, handle the parts on wires, keeping them free from any contiguous objects. You will find the oxid of manganese is deposited on the work, which must therefore be frequently replenished in the nitrate mixture. The preparation of oils to obtain a black or light black rust-protecting finish may be applied to harden and temper parts alike.

Formula No. 22 — Bluing Steel by Heat Treatment — Polished steel parts may be given a blue color by treating in hot sand, wood ashes, or pulverized charcoal. Place the parts in an iron receptacle and stir constantly while heating, in

order to heat uniformly. Heat just enough to char a pine stick. The parts to be blued must be free from grease. They are placed in the heated substance until the desired color is obtained. Further coloring is then checked by immersing in oil. The illustration in Chapter IV, Volume I, will show the arrangement used with a Bunsen burner. I have used discarded Stearn Knight pistons as retorts. The blue finish can also be obtained by laying a steel plate over the top of a stove, upon which the article to be blued is placed. The quality of the color depends largely upon the fineness of the finish.

Formula No. 23 — Cyanid Bath for Blue Mottled Color — The cyanid bath gives to the surface of the metal an exterior hardness with a mottled blue appearance; however, it does not have the admirable effect that the pack-hardening gives to best-quality shotgun actions. This method will answer in a number of instances for a "hurry-up" job, being difficult to differentiate from work done by the regular pack-hardening process.

The bath is composed of potassium cyanid placed in a crucible. "The amount to use is governed by the work you wish to do." The crucible is heated in a furnace so arranged that the top will not be exposed to the flames. A hood should be placed over it so that the fumes will escape to the outside atmosphere. Heat the cyanid to 1400 degrees Fahrenheit. Make a wire basket for small parts. For larger parts, wire the work so that it can be transferred conveniently from the cyanid to the solution. (Formula No. 24.) The quantity of the mottled color depends mostly upon the preparatory polishing finish.

Before a part is placed in the cyanid, make sure it is free from oil or any other foreign substance, especially water or potassium nitrate. This causes the cyanid to splatter, which might cause severe skin burns; for this reason the eyes should be protected with goggles and the hands with clean cotton gloves. Allow to remain in the heated cyanid between five and ten minutes, according to the quality of the metal and the mechanical uses for which it is intended.

Formula No. 24 — Prepared Solution — The solution is composed of potassium nitrate and water. To one gallon of water add one ounce of potassium nitrate (saltpeter) and 10 cc. sperm oil. Test pieces should be tried out as a preliminary experiment. The correct amount of nitrate will give the blue and mottled effect desired. If too light a color develops, add more nitrate, and if too blue, more water. To get the best results, air should be forced in the solution by blowing through a pipette which keeps the mixture in motion and also improves the appearance of the mottling. After removing the work from the solution, dry in hot sawdust. Wipe and apply a coat of gunlock varnish (Formula No. 48). When a fine-grained mottled effect is desired, introduce one ounce of sodium nitrate into the ready-mixed solution.

Formula No. 25 — Gun-metal Finish — Several additional chemical solutions have been used successfully for giving steel a gun-metal finish or black color. Among those are the three following formulæ, which work very well.

No. 1.	1 part	bismuth chlorid
	1 "	copper chlorid
	2 "	mercury chlorid
	6 "	hydrochloric acid
	50 "	distilled water
No. 2.	1 part	ferric chlorid
	8 "	alcohol
	8 "	distilled water
No. 3.	2 part	copper sulfate
	3 "	hydrochloric acid
	7 "	nitric acid
	88 "	perchlorid of iron

Other solutions have been prepared from nitric ether, nitric acid, copper sulfate, iron chlorid, and water. The method of applying these and finishing the work is practically the same as with other formulæ.

The surface of the metal is given a very thin coating of either of the last recipes, applied with a soft brush or sponge that has been well squeezed and allowed to dry. The work is then put in a cabinet to which steam is admitted, and maintained at a temperature of about 100 degrees, until it is covered with slight rust. It is then boiled in clean water for fifteen minutes and allowed to dry. A coating of black oxid covers the surface, and this is carded, after which it will show grayish black. By repeating the sponging, steaming, and carding operations several times, a shiny black lasting luster will be obtained. For the best finishes, these operations are repeated as many as eight times.

Another process employs a solution of mercury chlorid and ammonium chlorid, which is applied three times and dried after each application. A solution of copper sulfate, ferric chlorid, nitric acid, alcohol and water is then applied three times and dried as before. A third solution, of ferrous chlorid, nitric acid, and water is applied three times, boiling in clean water and drying after each. Finally a solution of potassium chlorid is applied and the work is boiled and dried three more times. It is then carded and given a thin coating of oil. Ordnance for the French government is treated in this way. The above methods are applicable to

hardened and tempered steels, as 212 degrees Fahrenheit is not enough to affect or reduce their quality. For steels that can endure a 600-degree temperature without losing hardness, more efficient methods are devised.

The American Gas Furnace Company has developed a process employing a furnace with a revolving retort. The object to be colored is placed in this together with well burnt bone. A chemical solution that gasified when injected into the furnace has been named "Carbona." The color does not form a coating on the outside as with the other processes, but a thin layer of the metal itself is turned to the proper shade. By varying the temperature of the furnace, the time the work is in it, and the chemical, different tints can be produced from light straw to brown, blue, purple, black, or gun-metal finish. Rough or sand-blasted surfaces will have a frosted appearance, while smooth polished surfaces will have a shiny brilliant appearance.

Formula No. 26 — To Produce a Brown Color on Steel — A bronze-like color is produced by exposing iron or steel parts to the vapors of heated aqua regia (equal parts nitric and hydrochloric acid), dipping them in melted vaseline, and heating them until the vaseline begins to disintegrate. Then it is wiped off with a clean cloth.

Another method of producing a bronze-brown is to heat the work slightly, cover the surface evenly with a paste of antimony chlorid (known as bronzing salt), and let the object stand until the desired color is obtained. The paste can be made more active by adding a little nitric acid.

Formula No. 27 — To Produce a Gray Color on Steel — A gray color on steel is obtained by immersing the work into a heated solution of:

10 gr. (avoir.)	antimony chlorid
10 "	gallic acid
400 "	ferric chlorid
150 cc.	distilled water

The first color to appear is pale blue, and this passes through the darker blues to purple, and finally to gray. If immersed long enough, the metal will assume the gray color, but any of the intermediate colors may be produced when used cold. This is also one of the bronzing solutions.

Formula No. 28 — Coppering Solutions — A coppering solution for coating finished surfaces so that lay-out lines may be more easily seen is composed of the following ingredients:

120 cc. distilled water
Add all the copper sulfate it will dissolve
1 cc. sulfuric acid

Test by applying to a piece of steel, and if necessary add a few more drops of acid. The surface to be coppered should be polished and free from grease. Apply the solutions with a clean piece of waste or cloth, and if a bright copper coating is not obtained immediately, apply the second coat, and so on. When the desired color is obtained, oil the surface and wipe off. The object of the oil is to terminate any further action of the acid. If the piece is to be hardened after coppering, remove the plating, for the reason that steel will not harden well where this has not been done.

Formula No. 29 — Etching Fluids for Different Metals — A common method for etching names or simple designs on gun parts or steel is to apply a thin even coating of beeswax or similar substance which is not soluble in acid. Mark the required lines in the wax with a sharp-pointed scriber, exposing the steel to the action of the acid which is finally applied. To apply a thin coating of beeswax, place the latter in a silk cloth, warm the piece to be etched, and rub the pad over it. Regular coach varnish is also used instead of wax as a "resistant."

Formula No. 30 — Etching Solution for Carbon Steels —

1 part nitric acid
4 " distilled water

It may be necessary to vary the amount of water, as the exact proportion depends upon the carbon in the steel and whether it is hard or soft.

Formula No. 31 — Hardened Steel —

2 parts nitric acid
1 " acetic acid

Formula No. 32 — High-speed Steel, Nickel, or Brass —

For high-speed steel it is sometimes better to add a little more nitric acid.

Formula No. 33 — Solution for Etching Bronze —

100 parts nitric acid
5 " hydrochloric acid

For Etching Brass —

First combine 16 parts nitric acid with 160 parts distilled water. Second, dissolve 6 parts potassium chlorate in 100 parts of distilled water. Then mix the two solutions together and apply.

Formula No. 34 —

The gun maker may wish to obtain a frosted appearance on work to offset a particular effect. The following mixture may be used, either for producing a frosted effect or for deep etching (depends upon the time it is allowed to act). It is composed of:

1	oz.	sulfate of copper
¼	"	alum
½	tsp.	salt
240	cc.	vinegar
20	drops	nitric acid

The action of etching fluids on steels varies according to the composition of high-carbon and alloy steels, as they are acted upon more slowly than low-carbon steels or wrought iron. Etching fluids that act efficiently on low-carbon steel may not do so well on high-carbon steel or cast-iron. The usual trouble is that the carbon liberated by the etching fluid settles to the bottom of the scribing and prevents further action. That difficulty can best be overcome by frequently washing out the carbon deposit and renewing the acid so that it will come in direct contact with the metal. A great help also is to sprinkle a little table salt in the acid when it shows a tendency to act slowly; this tends to give it new life.

The student may find need to color brass, copper, or various other metals, to give them an antique appearance. The following *modus operandi* is explanatory of the coloring of such metal surfaces.

Copper is more susceptible to coloring processes than any other metal, hence the alloys containing varied percentages of copper are possessed of differing shades of yellow, brown, red, blue, purple, and black. Alloys with smaller percentages of copper, or none at all, may be given kinds and degrees of color, but not as easily as if copper were the principal ingredient. The higher the copper content, the more readily can the alloy be colored. The shades and even the colors may be altered by varying the density of the solution, its temperature, and the length of time the object is immersed. This can also be altered by finishing the work in different ways. If a cotton buff is used, one shade will be produced; a scratch brush will produce another, etc. Thus in color work, to obtain the same shade as that of a former lot, all the data in connection with these operations must be preserved so they will be repeated with exactitude.

In making the solutions it should be remembered that a strong solution will produce the color quickly, and a weak solution more slowly. When a uniform coating is to be produced, a strong solution is the best, owing to the time factor, but the most effective and lasting results are obtained with weaker solutions, hence they are used in high-grade work. While these solutions are often employed cold, there are many instances where better results can be obtained when they are heated.

After the enumeration of the foregoing instructions relative to the bluing and browning of metal parts, I cannot stress too urgently the importance of preliminary cleaning. The same applies to antiques, special decorative parts for muzzle-loading rifles, brass furniture, and special museum pieces. Metal surfaces to be colored chemically must first be thoroughly cleaned, and must present a smooth and polished surface. To remove grease from small parts, dip in benzine, gasoline, ether, or some other solvent for grease. Boil large pieces in a solution of one part caustic soda and ten parts water. For zinc, tin, or britannia metal, do not use caustic soda, but a bath composed of one part carbonate of soda or potash and ten parts water. Do not touch the clean surface with the fingers, but handle the objects with tongs, forceps or wires. Also wear clean cotton gloves.

The grease removal should be followed by chemical cleansing; this principally serves the purpose of removing the greenish or brownish films which form on copper, brass, bronze, etc.

Formula No. 35 —

The composition of the bath or mixture of pickling, used for removal of foreign substances from metal surfaces in the preparation for production of color, varies for different metals. For copper and its alloys, use a mixture of 100 parts concentrated sulfuric acid and 75 parts nitric acid. If the metal is to be given a luster instead of a mat or dull finish, add about one part common salt to the pickling solution by weight. A better dip for a mat surface consists of:

Formula No. 36 —

64	parts	water
64	"	commercial sulfuric acid
32	"	nitric acid
1	"	hydrochloric acid

After immersion the work should be thoroughly rinsed several times in distilled water. If such treatment is so far satisfactory, proceed as follows: Heat to a dull red and plunge object into diluted sulfuric acid; allow to remain in old aqua fortis and finally rinse thoroughly in clean hot water. The metal should be soaked in aqua fortis until it has a uniform metallic appearance, and the bath should be large enough in volume to prevent an excessive increase in temperature. The results are obtained with straw-colored aqua fortis, as white is too weak and red too strong.

Formula No. 37 — Coloring Brass —

Polished brass pieces from old guns may be given various shades, from golden yellow to orange, by immersing them for a time in a solution composed of:

5	parts	caustic soda (by weight)
50	"	water
10	"	copper carbonate

When the desired shade is reached, the work must be well washed with water and dried in sawdust. Golden yellow may be produced as follows: Dissolve 100 grains lead acetate in one pint of water and add a solution of sodium hydrate until precipitate which first forms is redissolved; then add 300 grains red potassium ferrocyanid. With the solution at ordinary temperatures, the work will assume a golden yellow, but heating the solution darkens the color until at 125 degrees Fahrenheit it has changed to a brown.

Formula No. 38 — To Produce a Rich Gold Color —

Brass may be given a rich gold color by boiling it in a solution composed of:

2	parts	(by weight) potassium nitrate
1	"	common salt
1	"	alum
24	"	water
1	"	hydrochloric acid

Formula No. 39 —

Another method is to apply a mixture of:

3	parts	alum
6	"	potassium nitrate
3	"	sulfate of zinc
3	"	common salt

After applying this mixture the work is heated over a hot plate until it becomes black. After it is washed with water and rubbed with vinegar, it is again washed and dried.

Formula No. 40 — White Colors or Coatings —

The white color or coating that is given to such brass articles as pins, screws, and various other antique fittings may be produced by dipping the articles in a solution made as follows: Dissolve two ounces of fine grain silver in nitric acid. Then add one gallon of distilled water, and put this in a strong solution of sodium chlorid (table salt). The silver will precipitate in the form of chlorid and must be washed until all traces of the acid are removed. Testing the last rinse water with litmus paper will show when the acid has disappeared. Then mix this chlorid of silver with an equal amount of potassium bitartrate (cream of tartar) and add enough water to give it the consistency of cream. The work is then immersed in this solution and moved about until properly coated, after which it is rinsed in hot water and dried in sawdust.

Formula No. 41 — Silvering —

A solution of silvering that is applicable to such work as clock gauge dials, and accessories such as parts of brass furniture on old flint-lock pistols, is made by grinding together in a mortar one ounce of very dry chlorid of silver, two ounces cream of tartar, and three ounces common salt. Add enough water to obtain the consistency of a paste, and apply it to the work with a soft cloth. This will give to brass or bronze surfaces a dead-white, thin silver coating, but it will tarnish and wear if not given a coat of lacquer. Before adding the water, the mixture as it leaves the mortar can be kept a long time if put in dark-colored bottles; if left in the light, it will decompose.

Formula No. 42 — Gray Color —

A solution of one ounce arsenic chlorid and one pint of water will produce a gray color on brass, but if the work is left in this solution too long it will become black. Brass fittings or other objects should be left in the bath until they have acquired the correct shade, and then washed in clean warm water, dried in sawdust and finally in warm air.

Formula No. 43 — Blue to Violet Shades —

To give brass a blue color, dissolve:

1	oz.	antimony chlorid in
20	"	water and add
3	"	hydrochloric acid

Warm the work and immerse it in the solution until the desired blue is obtained. After that, wash in clean water and dry in sawdust. A permanent and beautiful blue-black may be obtained by using just enough water to dissolve two ounces copper sulfate and then adding enough ammonia to neutralize and make it slightly alkaline. The work must be heated before immersing.

Formula No. 44 — Violet Shades —

A beautiful violet color may be produced on polished brass with a mixture of two solutions.

First: 4 oz. sodium hyposulfite is dissolved in 960 cc. of water. Second: 1 oz. sugar of lead is dissolved in another 960 cc. of water. The two are

stirred together well. By heating this to 175 degrees Fahrenheit and immersing the correct length of time, determined experimentally, a violet color is obtained. The work first turns a golden yellow and then gradually violet. If left immersed longer, the violet will turn to blue and then to green. This same preparation can therefore be used for all of these colors by correctly limiting the time that the work remains in the solution.

Formula No. 45 — To Give Brass a Green Tint —

This solution will produce a "verde antique" or rust green:

3 oz. crystallized chlorid of iron
1 lb. ammonia chlorid
8 oz. verdigris
10 " common salt
4 " potassium bitartrate
1 gal. distilled water

If the objects to be colored are large, the solution may be applied with a brush. Several applications may be required to give the desired depth of color. Small work should be immersed and the length of time it remains in the solution will govern the intensity of the color. After immersion, stippling the surface with a soft round brush dampened with a solution will give it the varigated appearance of aged brass or bronze. This formula produces a very pleasing effect when used on some of the old muzzle-loading rifles.

Formula No. 46 — Blackening Brass —

There are many different processes and solutions for blackening brass. During the World War the aircraft ammunition was given such treatment to identify the tracer and incendiary cartridges. The projectiles of the incendiary ammunition were blackened as well as the cases of the tracer cartridges. It was therefore necessary to employ two distinct solutions to perfect the required blackening process. Trioxid of arsenic, white arsenic, or arsenious acid are different names of the chemical most commonly used. It is the cheapest substance we know of for producing black on brass, copper, nickel, German silver, etc., but has a tendency to fade; however, a coat of lacquer will preserve it for a long time. A good black is produced by immersing the work in a solution composed of:

2 oz. arsenic
5 " cyanid of potassium
1 gal. distilled or rain water

This should be boiled in an enamel or agate vessel and used hot.

Formula No. 47 — Blackening Brass —

Another cheap solution is composed of:

8 oz. sugar of lead
8 " hyposulfite of soda
1 gal. distilled or rain water

This must also be used hot and the work afterward lacquered to prevent fading. When immersed, the brass first turns yellow, then blue, and finally black, the latter being a deposit of sulfid of lead.

Formula No. 47 — Gun-lock Varnish: To Preserve Colors —

After a part has been given the desired color, it is washed in water and then dried in clean sawdust. The colored surfaces of alloys are in many cases protected and preserved by coating with a colorless lacquer, of which Japan lacquer is an example. Small parts are coated by dipping and large ones by coating with brush or swab. They can then be washed without injury.

When it is desirable to preserve the brown finish on parts, such as the barrels, etc., the lacquer or varnish is prepared as follows:

Dissolve 10 parts clear grains of mastic
15 " sandarac
5 " camphor
5 " elemi

Use pure grain alcohol to secure the desired consistency. The articles treated with this varnish will not only be preserved from rust, but their metallic luster will not be in the least dimmed by exposure to dampness.

Another varnish may be made as follows:

Formula No. 49 —

1 oz. gum shellac
1 " gum sandarac
30 cc. Venice turpentine
1200 cc. alcohol (pure grain spirits)

These two formulæ are also known as gun-lock varnish and may be used for case-hardened parts as well. Articles thus treated will have the case-hardening colors accentuated; the treatment acts also, in a measure, as a preservative.

Receivers, floor plates, trigger guards, butt plates, sling swivels, etc., are rather difficult parts to blue because they are thin, and it is no simple task to attach suitable holders for handling. All such parts can be blued in much the same manner and by the same solutions.

Receivers: First, all screw holes must be plugged by tightly screwing wooden plugs into them. Let the plug which is screwed into the threaded end

CHAPTER XVII

Care of Firearms: Cleaning Bores and Removing Obstructions

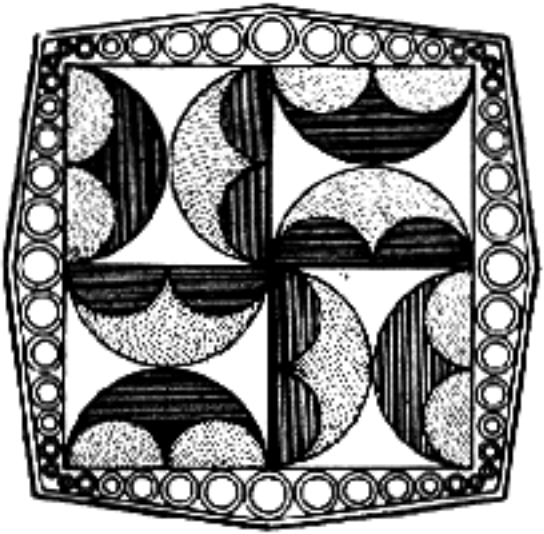

CHAPTER XVII

Care of Firearms, Cleaning Bores and Removing Obstructions

AN ASSOCIATION of several years with the average American rifleman has convinced me that there are two leading schools of thought regarding this matter of cleaning firearms; the first comprises the serious-minded individuals who take to it as a sort of religion, while the second looks upon it as a curse. The members of the former are forever cleaning and scrubbing away at their arms; those of the latter, negligently, if ever. The introduction and universal use, during recent years, of the non-corrosive type of primer, with the widespread advertising that it is no longer necessary to do any cleaning of firearms, has resulted in a great many converts to the non-cleaning sect—and in a great many ruined rifle bores.

I am still of the opinion that it is necessary to clean the bore of a rifle after firing, and I still clean just as quickly as I can after shooting the gun. I do not consider that this new non-corrosive type of primer is as yet the perfect product the manufacturers would have us believe. Certainly they have yet to produce a stable priming mixture which will stand up in a hot and humid climate for any appreciable length of time. A number of my readers may question the necessity of the instructions which follow, but I am basing my opinions on the great number of ruined rifle barrels which have been brought to me of late—barrels in which nothing but the new types of ammunition have ever been used, and yet which are pitted hopelessly beyond removal. I admit that in the majority of cases the primer acts as claimed, but I also know of a sufficient number of instances where it does not; hence I shall give instructions for the proper cleaning of firearms irrespective of what type of primer may have been used. It should also be kept in mind that there are other parts to a firearm besides the bore—parts which will rust as readily from the mere handling of the arm or from its exposure to the atmosphere and elements.

As a first consideration it is well to take up the exterior treatment—the means by which the barrel and mechanism are kept clean and free from rusting. Many owners who are careful to the extreme in attending to the care of the bore of their rifles are at times neglectful of their external condition and appearance. Human perspiration comes first as a rust-producing agency on the outside of firearms, and it is especially destructive to appearance, because rust resulting from the contact of bare hands forms tell-tale patterns of the thumb-print order all over the barrel and grip. It is an odd fact that some persons are not so provocative of this fault as others. There are people who can pick up and handle a rifle without rusting it in the slightest, while others will badly rust whatever part their hands touch. Goutily inclined persons are especially bad in this latter respect; and any gun owner who is conscious of this condition—as shown, for instance, by the inability to keep a bunch of keys in a bright condition—should be especially careful of the manner in which he picks up firearms and should be generous in the use of an oily cloth whenever he handles his own guns or guns belonging to others.

There is one very simple method by which any one may keep his firearms in perfect outside condition; and yet, strange to say, it is an idea seldom encountered. It consists of keeping always at hand —on the workbench or in the gun cabinet or cupboard—a special small jar containing one or two pieces of well-oiled chamois. Get a small stoneware or metal jar having a loose-fitting top to keep out dust, and in it always have an oiled fine chamois cloth ready for use to wipe over the outside of any firearm after handling. It takes but a moment to run this cloth over the entire surface of the arm, and the habit of always doing this before laying the arm away will keep the exterior clean and free of rust. This very simple expedient should be known to all shooters, yet it is seldom one finds such a logical preventive at hand. The most common method of wiping off the outside of an arm seems to be the use of the last patch with which the bore was oiled. The oily chamois and jar at hand will enable the rifle to be wiped off every time it is picked up. Use a chamois about fifteen inches square, and oil it well with the gun oil mentioned in Chapter XXV, Volume I.

Another simple expedient which every shooter should become acquainted with is the use of a small camel-hair brush in oiling the inside or the mechanism of firearms. Whenever it becomes necessary to lay away a gun for any length of

time, the outside should first be covered with a thorough coating of heavy oil or thick-bodied gun grease. The simplest manner in which this can be applied is to paint it on well with a small flat varnish brush, say about one-half inch in width. Such a brush works readily into all cracks and angles, or into any part of the mechanism. When laying the arm away, the best grease to use is the gun grease described in Volume I; this can be heated slightly until it flows readily from a brush, and it will then cover perfectly.

A smaller artist's brush, say about a No. 10 size, is best for working oil in the mechanism of the action; also for the proper cleaning out from the mechanism of any dirt or unburned powder grains. Another thing worth knowing is to use a squirt oil can filled with gasoline to wash out parts of the mechanism hard to get at with the cloth or brush; in fact the entire action of the rifle can be cleaned by this method in a few seconds.

The rifleman who is in any way careful of his rifles is generally well equipped with cleaning rods, brushes, patches, and oilers; but it is seldom you encounter such elementary preparations as the oily chamois, oil brushes, or squirt can. Yet these are about the most effective means possible to employ in the care of the rifle.

Naturally, there will be many occasions when the firearm will become subject to rust through exposure to snow or rain, or to the moist air around salt water. When a gun has become coated with water or snow, the very best thing to do upon getting inside again is to lean it, muzzle down, close to a hot stove or open fire and allow it to dry out thoroughly. Then immediately go over its entire surface, mechanism, and bore with suitable cleaning cloths and oils; get a protective coating of oil on it just as soon as possible. Salt-water exposure induces exceedingly persistent and dangerous rust, which only constant vigilance and care can counteract. The very air about salt water will rust a gun, and it is not a wise procedure to use the best-grade weapons around the seacoast. To the sportsman who is taking a brief trip over salt water I would suggest the painting of his barrels and exterior metal parts with one of the gun-lock varnish formulas given in Chapter XVI, plus a coating of heavy grease. If the exposure is constantly repeated a permanent remedy may be provided, admittedly at the expense of appearance, by painting the entire exposed steel parts of the arm with a good spar varnish.

Despite almost constant care and attention there will be times when small patches or spots of rust will form in places on a barrel and action; these can best be removed by means of fine steel wool. After burnishing off any rust with steel wool, always go over the spot with the oily chamois and rub the oil in well. A particularly bad patch of rust may necessitate the rebluing of the entire part by one of the formulas given in Chapter XVI.

Once the exterior of the firearm is properly cleaned and oiled, the arm should be put away so that atmospheric changes or humidity will not rust it unknown to the owner. Nothing can be more fatal at times than the mere standing of a rifle in a corner of the room and leaving it there for weeks without touching it. This is especially risky if the room is steam-heated, as condensation of moisture from a leaky radiator can quickly cover the entire rifle with red rust. A cold attic or unused room without heat is also bad, as sudden climatic changes may settle moisture on everything, and then rust promptly follows. Also, women and servants have a provoking habit of unthinkingly picking up a rifle by the barrel with wet hands. The best possible storage is in a properly-made gun cabinet with the door kept closed and locked. Not having this, the next-best place is a small cupboard, first slipping the rifle into one of those full-length flannel covers. The conventional full-length canvas cases are also very good, and if the rifle is to be left in a corner of the room or behind the door it should be in one of these by all means. Any kind of case is better than none, provided there is nothing in the material of the covering to cause rust.

The owner is advised to make periodic inspection of his firearms, not necessarily on particular dates, but often enough to prevent long periods elapsing during which an unsuspected lodgement of rust may be working havoc. Such a precaution is also desirable in view of the ever-present possibility that the use of a new primer, powder or gun oil may produce unexpected results.

Cleaning the Bore — The procedure invariably followed by the individual rifleman in cleaning his rifle is to lay out on a convenient table-top all the rods, brushes, patches, cloths, oils, etc. Holding the rifle in one hand he proceeds to pump patches up and down the bore with the other, the muzzle being on the floor. This is an awkward and inconvenient manner in which to work.

Perfect cleaning of a rifle bore can best be effected by the aid of a suitable vise; the shooter will experience a wonderful increase of convenience after installing this fixture on any available work bench. The gunsmith who reads this book will naturally have a proper vise at hand, but to the active sportsman I recommend the purchase of a small parallel vise. One such as the Stanley #776 can be purchased for about $4, and it is entirely

satisfactory for all cleaning purposes. As a steel-jawed vise is apt to do more harm than good unless fitted with suitable padded jaws, it will also be necessary to make or obtain these. Volume I, Chapter II, describes the proper type. For cleaning, the felt-lined jaws are essential. As the vise will be clamped to a substantial work bench and used mainly for cleaning and similar purposes, you might as well go ahead and fit it up with a few other cleaning conveniences. Fit a gunmaker's brace or bench horse, as shown in Chapter II, Volume I. Notches can be placed on the back arm of this brace for the purpose of keeping the cleaning rods out of the tools and litter which will soon clutter up the bench top.

With the rifle clamped tightly between the felt jaws of the vise, you can use a much tighter cleaning patch than in the extemporized operation on a kitchen table. A word of caution is advisable here: never clamp the vise too tightly on the barrels of a shotgun—you may collapse or dent the tubes. The lumps are the correct place to hold these barrels while cleaning.

A proper understanding of the principles of rifle cleaning is necessary to obtain the smallest expenditure of labor and material. The mechanical treatment consists in reaching into every part of the bore with a patch until the sharp corners between the lands and grooves are scrubbed clean and free of fouling. The chemical treatment consists in the use of boiling water or a suitable powder solvent of special penetrating powers capable, when applied, of neutralizing acids or other harmful residues of fouling. Both treatments are interwoven, and the two can hardly be separated except in theory; in practise they operate in unison, and the rifleman should understand this cooperation; he will then realize that elbow grease alone is but a partial remedy for the rusting proclivities of rifle bores.

Judgment should be exercised in the selection of cleaning rods and cleaning tips capable of pressing a patch almost as tightly as the bullet itself into the grooves of the rifling. In Chapter II is a complete description of how to construct these rods. Good rods are scarce, and once a good one is obtained it will pay to keep it in proper shape. A rack for cleaning rods, built on the order of a billiard-cue rack but with the rods hanging free from a notch, will keep them clean and straight—and ready at hand.

In addition to a series of proper-sized rods for cleaning, the gunsmith's shop will need to keep on hand a few heavier rods for drilling and driving out obstructions, and it will pay to lay in a few standard sizes of drill rod in 36-inch lengths for this purpose. The following tabulation indicates most suitable sizes for the various calibers:

Caliber	*Land Diameter*	*Full-size Driving Rod*	*Drilling Rod*	*Drill*
.22	.217	No. 3	No. 3	Size 5
.25	.250	15/64	15/64	C
7 mm.	.276	17/64	17/64	17/64
6.5 mm.	.256	1/4	1/4	1/4
.30	.300	19/64	19/64	9/32
.32	.311 app.	19/64	19/64	
.38	.350	11/32	11/32	11/32

With the right-sized rods at hand, the shop will be prepared to undertake properly the removal of any obstruction; repair jobs of this kind are always wanted in a hurry, and there may not be time to get a drill that is not in stock. The use of too small a drill in an emergency may ruin the barrel.

As every one knows, the simplest and safest method of cleaning the rifle bore is to pour through it a few quarts of hot water—the hotter the better. Once the bore has been dried—through the combined action of the heat of the barrel and a prompt wiping with dry patches—it can be oiled with a good gun oil and laid aside with the feeling that things are right. However, it is an odd fact that, simple as this hot-water treatment is, there are few occasions when it is adaptable to the immediate needs of the average rifleman; and it is invariably more convenient to clean the rifle bore by means of one of the many commercial solvents or gun oils now on the market.

To start the cleaning process, push a dry patch through the bore to remove the loose residue and dirt, which is plainly visible and will only clog the scouring brushes which are to follow. If desired, this dry scrubbing may be followed with another patch dipped in powder solvent. Should the rifle have been neglected too long, so that the fouling has dried up, it will be best to use an oiled patch the first time to obviate any risk of its sticking in the bore.

There are three different types of rifle-cleaning brushes of a good substantial make. First, there is the steel brush, then the bronze-bristle brush, and the bristle brush. Begin by dipping the bristle brush into a suitable powder solvent. Don't make the mistake of dipping a dirty bristle brush into a bottle of clean solvent; this only contaminates the latter with residue—and annuls its usefulness. Keep the bristle brush clean by squirting a few jets of gasoline over it when through using, and it will be in proper shape for the next occasion. Give the bore a good scrubbing with the solvent-soaked brush; use full-length strokes which will completely loosen up all residue, and then follow with a patch or two to clear out the bore of all loosened fouling.

It may be well to follow with another scrubbing, using one of the bronze-bristle brushes this time; or possibly a "one way only" brush, which is made of fine steel wire and is very thorough in its action. Some shooters consider the last-named brush a bit too drastic for use in a rifle bore, but if properly used it will do no harm. Suit yourself as to the brush used, but a good scrubbing with any of these brushes is much better insurance of a clean bore than a long-continued rubbing with cloth patches and elbow grease.

Having scrubbed and scoured the bore clean of all corrosion, wipe it out dry of all solvent, and coat the entire surface with a good-bodied, pure gun oil or grease. A great many shooters are of the belief that it is possible to combine a satisfactory gun oil with a powder solvent, making the one solution do the work of two. This erroneous idea generally results in a ruined barrel. A powder solvent should be light-bodied, thin, and penetrating, so that it will readily spread over the bristle brush and penetrate into all the corners of the rifling; also, it should wipe out easily and cleanly by means of a suitable patch. Such a thin-bodied oil will not remain evenly on the metal surface of the bore for any length of time, but will soon evaporate or run, leaving patches of steel bare and subject to the rusting influences of the atmosphere. What is necessary for this second or protective oiling is a pure, heavy-bodied oil or grease which will "hold" on the metal surface through extremes in temperature or the passage of time.

Powder Solvents — There are a number of satisfactory commercial powder solvents now on the market, most of them standardized as to amount in the bottle, price, and directions; you "must shake well" and "use freely." In general they are a mixture of thin-bodied oils tinted to an attractive color and containing one very potent smell. Any of these will do the work if used in accordance with the directions I have just given. But the formula given in Chapter XXV, Volume I, is as good as the best of them when it comes to dissolving powder residue and fouling; and it can be compounded by the shooter himself.

The above-mentioned solvent is designed for use in thoroughly cleaning out the powder residue and fouling left from firing; it should be applied according to the instructions in the preceding pages, and then completely cleaned out of the barrel, as any traces of the solvent remaining in the bore will dissolve oil and expose the metal to the action of rust through moisture. Do not labor under the impression that it is possible to combine a solvent with an oil.

Gun Oil — After the solvent has done its work and been promptly removed from the rifle bore, it is necessary to use a protective coating of some suitable gun oil. The fact that there are few oils fit for this work or for lubricating the mechanism of firearms does not seem to be commonly known; arms are continually coming in so badly gummed-up that special treatment is necessary to get them apart and to clean them. This is especially the case when linseed or castor oil has been used as a lubricant—not as rare an occurrence as you might think. The finest lubricant or bore protection we can use is the best quality of sperm oil.

Further information relative to oils and lubricants will be found in Chapter XXV, Volume I.

Any firearm may be kept in perfect condition by the methods I have just outlined; and it is not much of a job if taken in time. The best incentive, and a labor-saving device as well, is to have available the necessary materials for proper cleaning—and have them conveniently arranged for prompt use when needed.

There is another type of fouling which occurs in the bore of the high-velocity rifle at times, and this calls for the use of the metal-fouling solution.

Metal-fouling Solution — The gunsmith is often called upon to remove metal fouling from the bores of high-velocity rifles. This requires a special process—a very simple one when understood. Such fouling consists of patches of metal left in a rifle barrel from the jackets of bullets, particularly when using bullets having jackets of "cupro-nickel." This metal is fast disappearing in the manufacture of jacketed bullets in the United States, but in England and Germany they still use cupro-nickel bullets. The present manufacture of bullets in this country is from gilding metal or an alloy of copper. Some are made with the pure copper, which is rather a soft material to use. But the gilding metal, as used by the Frankford Arsenal for the manufacture of the National Match ammunition, is a much harder alloy which gives better results in accuracy and reduces the problem of metal fouling to a minimum.

To determine the presence of metal fouling in the rifle bore, first clean it with the powder solvent and then thoroughly clean and dry the bore by using clean patches. Examine from both the muzzle and chamber ends by holding it in a good light; the presence of metal can be detected in different forms such as long streaks, small flaky spots, or even lumps and smears adhering to the lands and grooves. When any such condition exists it should be removed at once, for it will interfere with accuracy, and if left long enough, rust will form

under these patches and in a short time you will have a ruined barrel. The formula for metal-fouling solution is given in Chapter XXV, Volume I.

The "doping out" of rifles was an essential operation for military rifle shooters during the years 1908-1920, but it is not a common procedure now. It is advisable to apply the treatment to any high-velocity rifle that is being laid aside for a long period, or to a barrel used in important matches, where the highest possible accuracy is necessary. The presence of metal fouling can best be determined by the use of a gauge plug such as manufactured by the A. G. Parker Company of Birmingham, England, and a few of these plugs are an essential part of a shooting kit.

Cleaning the Neglected Rifle Bore — The experienced rifleman looks upon the average shooter who permits the bore of his rifle to become rusted, as a pretty careless individual. True, the largest percentage of such cases is due to carelessness; but, on the other hand, rust is often attracted to even the experienced shooter's arms. No one ever hears of this, however, for it is removed as soon as discovered. But as a general rule, when a rifle barrel comes into the gunsmith's shop for cleaning it will have corroded beyond repair. The most common models will be the .22-caliber rifles ranging in price from $4.95 to $17.98; the owners of these arms seem to figure that a .22-caliber gun need never be cleaned. Most .22-caliber barrels are made of low-carbon steel, and because of their softness are readily damaged by rust; greater care must be given these arms than is necessary in the case of the harder and tougher barrels of modern high-velocity rifles.

In a number of instances the rifle barrel has been neglected for only a few days, but as the weather has been mild and the humidity low, only a light coating of rust has formed. This can readily be removed and the barrel be returned to proper shape by using a bronze-bristle brush dipped in powder solvent and the bore given a thorough scrubbing. Keep the brush well saturated with the solvent and scrub the barrel well. Wipe clean with patches, and inspect. If you should find a dull appearance in the bore, try one of the "one-way" steel-bristle brushes, working this back and forth but taking care not to let it run out at the muzzle until you consider this scrubbing operation finished. This should brighten up the bore sufficiently, but it may be necessary to use one of the lapping operations described in Chapter XVIII. In fact, a lapping operation is the last step necessary to restore the bore to its original condition if any degree of rust has formed.

There will be various stages of these rusted and semi-rusted barrels, and the exact treatment depends upon the degree to which the bore is affected. After you have tried scrubbing with the powder solvent on the metal-bristled brushes, should the bore still appear dull, I suggest filling the barrel with fresh cow's milk—as fresh and warm from the cow as you can get it. This may seem like a strange remedy for the rust which has begun to attack the bore, but I have found it an excellent one. Come to think of it, this is not such an odd preparation, after all; it is only recently that the scientists of this enlightened day and age have succeeded in mixing oil and water together, and the results of their efforts are being highly recommended for use in rifle barrels. Now, cow's milk is also a most satisfactory, if older, mixture of water and oily fat which, when fresh, remains in a perfect state of mixture and suspension.

Another treatment often recommended is the use of the cleaning funnel and hot water. Altho this is conducive to the removal of powder and primer residue, or for dissolving any harmful chemicals which may have been left in the bore, it is not of much value for removing rust. Hot soapy water or soap-suds have also been recommended, but I consider the fresh cow's milk far better than either.

The semi-rusted barrel may often be restored to its original condition of brightness by use of the following lapping compound. Mix pulverized Vienna lime with straw-colored paraffin oil to the consistency of a paste. Vienna lime has a polishing effect on metal only, and will do no harm whatever to a rifle bore as an abrasive may. This polishing preparation is used on a felt or leather lapping rod such as described in Chapter XVIII; or it may be used by taking a worn bronze-bristle brush, wrapping it with a canton-flannel patch, and screwing this on the end of a cleaning rod. Keep this brush well supplied with the compound, work it from breech to muzzle for about half an hour, and the bright finish will be restored to the bore.

Pitted Rifle Bores — The badly pitted rifle bore is a serious problem, and it is not often that it can be restored properly without reboring the barrel, which means giving it a different caliber. About the only thing you can do is to scour out or lap these bores to a semblance of their former condition; often this leaves the rifle in as good shooting condition as before, provided appearance is not being considered.

The lapping operation is always the final step in scouring out the badly rusted or pitted barrel, but there are various means of leading up to this. First, wrap a flannel patch around a worn bronze-bristle

brush and coat or soak it in a paste made of fine flour emery and olive oil. This is pulled back and forth over the surface of the bore until you have a bright surface above the pits. If you have a very bad case of rust, apply the rust-removing formula given in Chapter XXIV. This will prove effective in most cases, but if desired results are not obtained, try the pickling solution given in the same chapter. When using either of these solutions, the chamber must be plugged very tightly and the muzzle protected with the rubber hose as prescribed for the treatment given for metal fouling. With either of these treatments, and especially the latter, the solution must not remain in the barrel any great length of time, as its action is rather severe. After either treatment strong ammonia must be poured into the barrel to neutralize the effect of the acid on the steel. Then wash out and clean the bore as when using the metal-fouling solution.

The last step in treating any bore rusted so badly as to require the application of a rusting or pickling solution will consist of a thorough lapping out, following the general procedure as outlined in Chapter XVIII. Before doing any of this it will be well to measure the bore by forcing a lead slug through it from breech to muzzle; this will give you an exact index to its size and will detect any tight or loose places throughout its length; should any be found, they can be corrected by proper lapping methods.

All the advice given above will never remove deep rust pits which have eaten their way into the steel; the best you can do is to scour out the barrel and smooth it up to some extent; its accuracy is gone, but in most cases the rifle can be made to perform very well as a knock-about gun. In many cases a new barrel is much cheaper in the end, unless in trying out all this you only wish to carry out experiments and methods for your own satisfaction and experience; then the results are well worth the labor. But for the complete restoration of a ruined barrel, nothing has yet been discovered.

Cleaning Shotgun Barrels — You may have noticed that the greater part of the information and methods covered in the preceding pages have been devoted to rifles and the rifle users. It is a fact that these are about the only shooters who take their art seriously when it comes to cleaning their arms. And it is also a fact that the well-to-do shotgun owner who would not give a second thought to paying $500 for a high-grade scatter gun will not give even a first thought to the cleaning of that fine arm after he has shot it. Rather than go to the trouble of cleaning a shotgun, some men postpone the task until they can take it to a gunsmith before the opening of the next hunting season. And then they casually remark just before they leave, "I'll leave this gun here for a day or so for you to look over; and, oh, by the way, I don't remember whether I cleaned it or not the last time I used it." Before you have an opportunity to inspect the gun, they disappear. And after the accumulation of rags, residue, rust and what-not has been removed from the bores, those barrels generally need lapping out or possibly reboring to remove the bad pits.

It is just as important to keep a shotgun barrel clean and spotless as it is a rifle or pistol barrel; that is, if one expects the proper results, with a pattern that shows every possible pellet within its killing circle. The badly deformed pellets which leave the pattern (called flyers on this account) are mostly caused by coming in contact with the deep pits scattered along the bore. The smooth and even bore of the shotgun allows us to clean and keep it in perfect shape much more easily than in the case of the uneven lands and grooves of the rifle or revolver. The methods and formulas I have given for use in rifles will work equally well in the shotgun.

If in a semi- or lightly-rusted condition, the same treatments may be applied to shotgun bores as I have given for rifle barrels. All that is generally necessary for the slightly-rusted bore is to wind canton-flannel patches around a suitable barrel scourer and then use the Vienna lime lapping compound to bring back the high polish. And since there is such a large inside diameter to work to, by making suitable lapping rods it is an easy matter to draw-polish the bores. Figure 96 illustrates these rods, made with small wooden adjusting screws which are necessary to keep the laps always up to the full diameter of the bore, and so they will always properly perform the polishing operation. The degree of rust may be such that a compound of flour emery or rouge may be necessary to apply to the laps; this is a matter soon learned by experience.

Make up a number of these laps ahead of time and have them ready for use. Coat them with a very thin glue and then cover the surface with the lapping compound and let stand for at least twelve hours before using. Some may have fine emery or crocus cloth glued to the surface, while one or two will necessarily be prepared to use a light lapping compound for only a bright polish.

When a shotgun barrel is full of deep pits, it will be better to rebore it, provided the thickness of the barrels will permit such an operation. But if the defects in the bore are less severe, they may often be polished out with a number of hand operations,

and these will have no serious effect upon the patterns. Naturally the bore will be somewhat enlarged, but as you will be using the abrasive material from the breech end, such a slight enlargement usually improves the patterns, provided they are even and turn toward the muzzle. When working close to the muzzle, try not to bell-mouth the extreme point of delivery—the end of the bore.

If deep rust pits have appeared in a Damascus barrel, it is ruined, because the rust has eaten out the iron strands between the steel and it is almost an impossibility to rebore the barrel without enlarging it to such an extent that standard wads will not hold back the powder gases. It would be extremely dangerous to use such a rebored barrel with modern high-velocity shotgun ammunition.

There is one serious menace to shotgun barrels which I might as well mention here, and that is the cotton ropes, or barrel wicks, which are sold for the purpose of preventing barrels from rusting. Contrary to expectations, they generally rust the bore completely in time. The fault lies in the fact that the oil or grease with which the rope is impregnated has dried out and left the cotton dry. Moisture then collects and is retained by the cotton, causing heavy rust in the bore. And I have removed many of these ropes from shotgun and rifle barrels which were covered with heavy rust from using the wrong oil or grease, the owner having regreased them with what he considered a correct protective oil, but which rapidly dried out. These ropes are particularly destructive in a Damascus barrel, as when rust sets in, it rapidly eats out the iron from between the steel, as mentioned above; often such rust will eat completely through the barrel. They are equally bad in rifled arms and in smooth bores. If you must use them, see that they are kept well lubricated with one of the oils or greases I have mentioned previously, as many of the light oils or solvents on the market are unsafe for such use. However, my advice is to use only the proper oils or grease and exclude the ropes altogether.

After being cleaned of rust of any nature the shotgun barrel should always be given a mirror-like finish or high luster. If a barrel picks up lead excessively it is an indication of minute circular grooves or scratches, which at times are not perceptible to the naked eye. If much of this is in evidence, very poor patterns are the result and the gun should be bore-polished.

Removing Obstructions from the Barrel—Whenever a rifle or shotgun is brought to me for the removal of some obstruction in the bore, I cannot help laughing as I imagine the surprized owner's bewilderment and dismay when it happened. To listen to his explanation and scrutinize his countenance is enough, for his sheepish expression divulges all. If I could enumerate all the various materials I have removed from rifle and shotgun barrels, the list would cover this page and would consist of such extremes as taking a coat-sleeve lining from a 12-bore shotgun down to working on a .22-rifle barrel filled with cement.

No one puts a piece of some foreign material into a barrel with any intention of its sticking; but, strange as it may seem, it usually does. The .22-caliber rifles and shotgun barrels seem to have the greatest trouble of this kind. In the .22 the two articles which are the worst offenders are broken brass cleaning-rod tips and lodged bullets. Shotguns come in wadded tight with a mass of cotton rags, often rusted in and making one of the most troublesome things to remove. Most of these obstructions have become lodged through carelessness; and in the excitement which ensued, and the frenzied efforts to render first aid with anything that came to hand, the obstruction has only become wedged in all the more tightly. Often, in these first hasty efforts to drive the obstruction out, the barrel has been ruined.

When a solid substance such as a bullet becomes lodged in the barrel, it is invariably most satisfactory to drill it out. Select a drill about 0.010-inch under the bore diameter (top of lands). Turn the shank end down to a suitable size for about a half-inch in length, and then drill the end of a rod (drill rod is the most suitable), selecting the size which will just clear the bore diameter. Sweat the drill and rod together, care being taken to have the drill perfectly true and in line with the rod. Such an extension drill may be used in the hand drill or brace, and it is an easy matter to drill out, in a few minutes, any solid obstruction which may have become lodged in the rifle bore. Should the obstruction be in the form of cotton or cloth, do not attempt to drill it out, but use a special wormer. This will be described later.

When drilling out any irregular obstruction of metal such as part of a brass cleaning rod or tip, great care must be exercised in making the extension drill so that it will run perfectly true on the end of the drill rod. Use a drill about $\frac{1}{64}$ inch smaller than the bore of the rifle, and a rod as near the diameter of the bore as possible. Aline the drill to the rod very carefully. The point of the drill must be ground close to a 60-degree angle, which is about 30 degrees to a side, in order to hold to the center and not run out while drilling, as this would cause it to gouge out one side of the rifling.

One of the most difficult things to remove from a

rifle barrel is cotton after it has become rusted. This generally clings to the bore so tenaciously that it is necessary to make up a special "wormer" and pick it out piece by piece. When an obstruction has become lodged in the barrel in the form of a piece of cloth, the first and best policy is to pour a liberal amount of light paraffin oil into the bore and allow it to stand for an hour or so, or even over night. Reverse the barrel and pour the same amount in from the opposite end, allowing it to remain for a similar length of time. Then "feel" the obstruction by trying to tap it out with a close-fitting, square-ended rod; and if a few moderate blows will not start it out you will have to pick it to pieces. Solder a suitable-sized wood screw on the end of a steel rod and remove the material by screwing this into the cloth a bit at a time, gradually getting out what is possible until the complete mass is removed. A similar type of "worm" may be made by filing a specially pointed thread on the end of a drill rod and using it with a tap handle clamped on the opposite end.

Once the drill has penetrated an obstruction it is generally an easy matter to drive it out with a rod made flat on the end; in fact, there are many occasions when a solid obstruction may be driven out of a rifle barrel by means of a suitable driving rod. The diameter of such a rod should be near to that of the bore and the end should be flat and full size. First oil the bore thoroughly from both ends and then set the driving rod up firmly against the obstruction; now take a heavy hand hammer of about four or five pounds weight, and give one or two solid blows to the rod; if this does not start to move the obstruction—stop! You have a job of drilling on your hands.

In general, this attempting to drive out an obstruction is wrong, merely because too light a hammer and too small a driving rod are used. The average shooter almost always attempts to use a regular cleaning rod and a bench hammer for the operation. When a small end rod is used, the result is invariably a wedging into the obstruction while the comparatively light blows resulting from use of the average hammer only expand the mass and cause it to grip all the tighter. What is needed for a driving operation is a full-sized, one-piece, flat-ended section of drill rod and a heavy hand hammer. Hold the driving rod steadily against the obstruction and strike a solid blow, with the barrel clamped *firmly* in a heavy vise and everything good and solid so nothing will move but the obstruction. This operation, remember, is only performed on rifle barrels; never attempt to drive any obstruction out of a shotgun barrel, as the walls are too thin.

When the .22-caliber rifles, especially the cheap factory arms owned by the average boy, have a bullet lodged in the barrel, the owner's first idea is to shoot it out. The first trial is probably not a success, so he continues to fire additional shots until the bore is full of lead bullets and the barrel entirely ruined. However, this will not seriously affect the rifle in the owner's opinion as long as it can be made to shoot again. These bullets must be drilled out, and the barrel must then have a mercury treatment to remove the lead from the grooves. Here is the procedure:

Mercury Treatment for Lead Fouling — Mercury or quicksilver is the small-bore shooter's special friend when it comes to removing lead from the bore of his rifle. Lead fouling in a .22 rifle is somewhat similar in effect to metal fouling in a high-velocity arm, and can usually be removed with a bronze-bristle brush. When a vigorous scrubbing with the brush fails to bring about the desired results, we apply the mercury treatment. Quicksilver has a strong affinity for lead, and an application of it will completely free the lands and grooves of the metal. First thoroughly clean the rifle bore, eliminating all oil and grease; then place a tight-fitting cork or soft wooden plug in the chamber end. With the butt of the rifle resting on the floor and the barrel clamped perfectly vertical in the vise, pour enough mercury into the barrel so that it will come flush with the muzzle. Let it stand this way for between thirty and forty minutes and then pour the mercury back into its bottle, as it can be used over and over again. After pouring back the mercury, remove the plug from the chamber, wipe the bore clean, and examine it in a strong light. Should any fouling remain, run a *clean* bronze-bristle brush through the bore several times and then repeat the process. A single treatment is usually sufficient for any .22 barrel, however.

It only requires a very small patch of lead fouling in a .22 barrel to cause it to shoot inaccurately; frequent examination of the bore for this trouble is always necessary, especially on target rifles. Many shooters carry a complete set of barrel plugs, running from .216 to .219 inch by half-thousandths; these are especially useful in determining the presence of lead in the bore. If you have a small-bore barrel which is continually picking up lead you should examine it carefully for the presence of tool marks or a rough spot on either the lands or grooves. The only treatment which will repair this defect is to lap the barrel.

One encounters some amusing displays ot ingenuity at times in connection with lodged bullets. Once on a hunting trip in Northern Quebec, I

failed to take along a .22 rifle for grouse; so I used a Model '90 Winchester belonging to a trapper with whom I was staying. There were five rings on the outside of the barrel, caused by trying to shoot out lodged bullets; and the inside of the bore was a sorry sight. A cleaning rod had never been used; instead, when a bullet had lodged it was finally melted out. I at once passed up this rifle as hopeless, but the trapper insisted that it was as fine and accurate a gun as he had ever owned. I was somewhat amused and incredulous, so to prove his statements the owner placed the cover of a small magazine on a tree a good thirty yards off, and out of the five shots he fired at it, every one was well centered on the paper. I could scarcely believe my eyes; and when I took the rifle and did as well I was completely baffled. One of the rings in the center of the barrel bulged out until it was very noticeable. But in spite of all this I never missed a grouse with it and the shooting of that rifle will remain one of the unsolved mysteries of my life.

This melting out of a lodged bullet is quite frequently done, but it is a bad mistake as heat should never be applied to a rifle barrel to remove any obstruction. It must be remembered that there is always some mechanical means at hand, if only you can use your ingenuity and figure matters out calmly and logically.

Obstructions in Shotgun Barrels — The commonest obstruction we find in shotgun barrels is invariably a tightly packed wad of cloth, caused either by ignorance of proper cleaning methods, or by a desire to protect the bore more fully from rust. In the former case the owner tries to ram a red flannel undershirt through the barrel, only to have it stop midway and refuse to function any further in either direction; in the latter the more careful and conscientious owner does what he believes to be the right thing and stuffs some oiled rags in both muzzle and breech ends of the tubes before he lays the gun away for the closed season. The oil soon evaporates, or the rag in the breech is forgotten and unthinkingly shoved forward into the barrel—and it sticks there. This idea of protecting the bore from rust by sealing both ends is entirely wrong, and such a thing should never be done; keep all corks, rags, tissue paper, and ropes out of shotgun tubes. Clean the bore properly with extra care, grease it heavily with some pure and heavy gun grease, slip it into a case, chest or gun cupboard where it is protected from sudden atmospheric changes, and the barrel will never rust.

But we are concerned here with some cloth obstruction that has been wedged into the barrel. The best and safest method of removal is to pick the material out piece by piece with a shotgun wormer, which can be obtained from any dealer in gunsmith supplies. It is somewhat different from a rifle wormer, being made just like a corkscrew, but with two "threads," and will fit any standard cleaning rod. It may be necessary to soak the obstruction with oil for several hours, and then to work from both ends of the barrel; but one seldom encounters a job where the cloth is wadded so tightly that the wormer will not bring it out.

A particularly bad obstruction to take from a shotgun tube is a tightly wadded cleaning patch which is fastened in the rod tip or brass eye; this cannot always be picked out. Sometimes a patent brass cleaning brush will break off in a barrel, and this also is hard to operate on with safety. It may be advisable to try drilling out such obstructions, in which case a drill on the order and size of the regular rifle-barrel drill described in previous paragraphs is used. This had better be of at least .30 caliber and it must be used only through a bushing made a close fit to the barrel. Thread the drill rod through the bushing and keep the latter as close to the obstruction as possible while the drilling is done. In this way the drill is kept to center of the obstruction and will not run off center and drill through the side of the barrel. On a particularly obstinate case, work from both ends of the barrel. Once the drill has penetrated, try the wormer.

Shotgun tubes are surprizingly thin between the choke and cone areas, and it is very easy to bulge them out or break through by harsh or improper methods in work of this nature. For this reason it is invariably a mistake to attempt to drive or hammer out the obstruction. This should only be attempted as a last resort. I am not here recommending that it be done, but in case you have no other means of accomplishing the end and must take the risk of ruining the barrel, make up a driving rod of hard wood to a full-bore size and have the end perfectly flat; this *should not* work off center or wedge the obstruction any further. Oil thoroughly with a thin oil and do all the driving from the muzzle end of the barrel. Never make the slightest attempt to hammer things out with a small-diameter rod—it is certain to work to one side and bulge the barrel.

Despite all our care and efforts, obstructions will continue to be lodged in barrels, and the ensuing excitement generally wedges things more firmly in place. When something does become stuck in the barrel of a firearm, do not become excited and attempt to drive it out with the first thing you can pick up; sit down and quietly and calmly figure out the logical thing to do. In fact, the best rule that can possibly be followed is immediately to pour

plenty of a light penetrating oil in from both ends of the barrel; then lay it aside until the next day, and think matters over in the meantime. Go easy at first, as you may have a serious job on your hands; use your own ingenuity and follow out the suggestions given here. Always apply sensible treatment, for drastic measures usually result in a partially or completely ruined barrel.

Chamber Obstructions — One of the meanest breaks in the shooting game is to have the cartridge case part, and the body of the case remain lodged in the chamber. This invariably happens when forty miles from a shell extractor—and nothing to do but use the guide's rifle for the rest of the trip. When this occurs it is usually an indication of too great a headspace between the chamber shoulder and the bolt face; seldom does a cartridge part in a bolt-action rifle when the headspace is of correct length. The most common cause, just now, concerns those individuals who load their own ammunition and use cases which have previously been fired with a mercuric primer; they do not realize that mercury has a rapid deteriorating effect on cartridge brass, which usually results in its parting at some point—usually right back of the shoulder. If there is the least bit of excess head space the condition is aggravated and the case usually parts about ½ or ¾ inch from the head.

The Marble Manufacturing Company of Gladstone, Michigan, make a broken-shell extractor to remove just such ruptured cases. At times these are very effective in the complete removal of the part still in the chamber; and at other times they fail. Still, they are a good thing to have along in the wilderness. If, in the act of removing the ruptured case with one of these extractors, it does not come out readily with gentle treatment, insert a cleaning rod from the muzzle and with it gently tap the forward end of the extractor as you raise the bolt handle. By so doing, you imbed the threaded end more deeply into the case neck, and the tapping also usually breaks the brass loose from the walls of the chamber.

If a shell extractor fails to remove the broken case there is much work ahead; especially if the case has become lodged in a badly rusted or corroded chamber. The most effective method to use then is to chase a fine thread on the end of a piece of drill rod which is 0.010 inch larger than the inside neck diameter of the case. Notch the end at three points with a small rat-tail file, and file a slight leed on the end so it will be possible for the threads to cut their way into the brass. This form of extractor should be long enough so that it can be inserted into the chamber through the receiver of the rifle and be worked with a dog or tap wrench from the rear end; therefore make it sufficiently long. Harden and temper the threaded end to a blue. To use, screw the threads up into the neck of the case, not quite to the end; then insert a rod from the muzzle and gently tap the stuck case out. A little oil applied previously and allowed to penetrate will do no harm.

If this method fails, it will be necessary to break the barrel apart from the receiver and chip the case out with small specially made chisels. Do not attempt to do any chiseling through the receiver; you cannot work from the proper angle and will only scratch and ruin the chamber. Strip the rifle and dismount the barrel. Then make up a small chisel or two on the nature of a thin wood-carver's sweep, the curve to be the same as cartridge, point not too sharp, and with a double radius to the edge so it will wedge in between the broken case and chamber walls without scratching the latter. Work and tap the rear edges loose, and when you have gone around the circumference of the case try the cleaning rod from the muzzle end and back the case out if possible. Be careful not to chisel up into the shoulder of the chamber. This is an operation requiring skill and *care; great care* must be used that you do not scratch or gouge the walls of the chamber in the slightest or that particular barrel will have extraction troubles until the end of its days.

Having successfully chiseled out a lodged case, it may be advisable to lap out that chamber and polish it again. This is covered in Chapter XVIII. Once you have encountered this disagreeable experience of a broken case in the rifle chamber, look for the cause and remedy it at once. You may be far away from any correction methods the next time it occurs; however, this rarely happens with everything in perfect shape.

Cleaning and Repair Kits — Every rifleman who takes any proper care of his rifles will in time assemble some sort of a cleaning and repair kit; some of these kits are quite simple and elementary, while others, such as are taken by a large party on safari into Africa, are complete and pretentious field armories. At one time I made what I believe to be one of the most complete cleaning and repair kits ever made for an individual sportsman. It was a de-luxe outfit belonging to Colonel Whelen and was made for the .30 '06 Springfield. The cleaning rod was jointed and had a knurled fiber handle running in ball bearings. Such small races could not be purchased so it was necessary to make them, using $\frac{1}{16}$-inch steel balls in two races, front and rear; this construction made the perfect ball-bearing handle. By unscrewing the joint near the handle,

a separate round knob could be screwed on the rod; this was a handy means of turning the rod for the purpose of drilling or tapping out an obstruction. Among the fixtures of this chest were: two oil cans, a grease box, three specially-made gunsmith's screw-drivers, a Jacobs drill chuck, two small brass funnels for cartridge loading or similar purposes, a complete set of 6-inch needle files in their special container, three-cornered scraper, small chisel and drift punch, broken-shell extractor, light hammer, fiber hammer, set of oilstones, and a selection of spare repair parts. Included with the cleaning-rod tips were the three special ones used for removing obstructions. The case was made of American walnut, beautifully finished and lined with plush, and the lid contained a brass plate etched with the Colonel's name and the Camp Fire Club insignia.

Not every shooter will need as pretentious a cleaning and repair kit as the one just described, but it is well to have at hand a full set of properly-made cleaning rods and fixtures. In Chapter II I have given a complete description of how to construct good cleaning rods.

CHAPTER XVIII

Lapping Barrels and Polishing Shotgun Bores

CHAPTER XVIII

Lapping Barrels and Polishing Shotgun Bores

LAPPING is a refined abrading process usually employed for correcting errors and polishing the interior of rifle and shotgun bores. The purpose of this class of work is to give a barrel a smooth surface or a mirror-like luster. Lapping bears about the same relation to the interior of a firearm as the finishing and polishing described in Chapter XV does to the exterior surfaces. There are many essential factors in the process of lapping steel surfaces, both flat and cylindrical, and a separate book could be devoted to this subject alone. A student will do considerable lapping before he becomes in any way proficient; there are certain motions, touches, feels, sounds, and refinements which one can acquire only by practise, and it would be almost impossible to describe them in a way that would be intelligible.

In lapping rifle barrels, the laps are made of lead, but for shotgun bores we shall often refer to various other materials and methods. The lead lap used for the rifle barrel is charged with an abrasive which is imbedded in its surface. The grade or coarseness of the abrasive depends upon the finish required and the amount that must be removed by lapping. In a rifle barrel the highest finish is usually required, hence a very fine abrasive must be used.

In lapping any form of barrel which has spiral grooves, a lap must be cast on the end of a steel rod. The lead is then the exact form of the interior. By coating the surface of the lap it is charged and becomes a means of cutting the steel surface to a certain extent. Oil and emery paste must be used freely upon the surface of the lap or the opposite condition will exist—the barrel will cut the lap. The tendency of lead laps to lose their form is an objectionable feature. They are, however, easily moulded on the end of the lapping rod. It is always well to change these often, so that it is possible to keep the form well in the grooves and lands.

The correct abrasive to use when lapping a barrel is *flour of emery,* or a very fine grade of carborundum. The latter being the fastest cutter, is of course more desirable, especially on a rusted barrel. It is mixed with sperm or olive oil to the consistency of molasses, and is applied sparingly to the surface of the bore, from where it is taken up by the lap which becomes charged as it passes over. Insert this well into the barrel.

When the operation is almost completed, however, this is discontinued, and a drop or two of oil charged with the finest particles of flour emery is substituted. This is obtained by sifting a teaspoon of flour emery into a tumbler full of sperm oil. After standing one hour, the oil should be poured off; the residue will be found to be charged with the finest emery, the coarse particles having settled to the bottom. This abrasive is applied a drop at a time, from the end of a pointed stick well inside the barrel. This will make a remarkably smooth and bright finish, if one wishes to leave it this way; but to secure the highest luster, a new lap must be cast.

Mix powdered rouge together with sweet oil—or powdered Vienna lime with paraffin oil—to the consistency of a paste. The latter produces a remarkably fine luster upon the work, whereas the former gives the high dark luster. Keep the lap well supplied with these finishing abrasives and do not allow it to become dry in any part of the barrel. Apply it from both ends of the barrel, as the lap is drawn back and forth.

Measuring Bores — The first stage of lapping a rifle barrel is to measure the bore, having first carried out all the operations given in Chapter XVII. It is essential to know the diameter of a barrel before starting the lapping operation; also to know if it has tight or loose spots.

The bore diameter is the size over the lands or the distance from the top of one land to the top of the opposite one, measured across the bore. The groove diameter is the depth of the rifling measured in a like manner, or the distance from the bottom of one groove to the bottom of the opposite one. These diameters should be measured with a micrometer and the student should always know, before the lapping operations take place, the exact bore and groove diameter of any rifle barrel and keep these in mind.

The Frankford Arsenal had an instrument which was called a "star gauge." Two of these were made: one was kept at the Frankford Arsenal, and

one sent to the Springfield Armory. The gauging head was fastened to a tube; on the inside was a rod which was fastened to the projection, and on the opposite end a vernier scale reading in 0.0001 inch. Master ring gauges were made in 0.3060, 0.3070, 0.3080, and 0.3090 inches. They were used to check the measuring points, and as the scale has ten graduations on it, it could always be kept in perfect adjustment. On the steel tube this had rings one inch apart, and measurements could be taken one inch apart the full length of the barrel. A *star-gauged rifle barrel* is simply a barrel measured with this gauge. Other gauges are also made to determine the diameter, but when it is star-gauged it means that the full length of the barrel was measured at intervals of one inch and came within certain limits set as maximum and minimum dimensions. We found a measurement which gave the finest results in an accuracy test:

Groove	0.3082	maximum
	0.3080	minimum
Land	0.3002	maximum
	0.2999	minimum

A star gauge is a very expensive instrument, and the two which were made at the Frankford Arsenal cost about $500 each; thus these are somewhat out of the reach of the private manufacturer, let alone the average rifleman.

There are always two ways to do a thing: the simple method and the advanced or technical one. To work out ideas in a technical manner takes years of study. To measure the bore and groove of any rifle barrel, simply drive a lead slug or bullet through the bore and measure the diameter. Select a piece of pure lead, and if you have a lathe, turn this about 0.002 inch over the groove diameter of the barrel; if not, hammer and shape a piece about three-fourths inch in length which can just be driven into the bore, not necessarily tight, but so it can be pushed in. Insert a steel rod which is close to the bore diameter, and with the bolt locked in place, insert the rod from the muzzle, hitting against the bolt. The length of the rod makes no material difference as long as it comes about half-way into the barrel. Apply a light coat of thin oil to the interior and then insert the rod and the lead slug. Insert another rod, which is near to the bore diameter, from the muzzle against the slug, and with a hammer give good sharp blows which will upset the lead and fill all parts of the grooves. When withdrawn and measured, this gives a true reading.

Before withdrawing this lead master-slug from the bore, shove it up near the chamber and then work it out slowly to the muzzle. Note every tight and loose spot that you encounter throughout the barrel length and apply more time on these spots when the lapping operation takes place.

When you wish to measure the breech and muzzle, cut rods to the proper length to rest against the bolt or breech block. First upset the lead at the chamber end, then take another rod which will reach up to the muzzle or to a distance from which a true measurement can be taken. Then upset a master slug at that point with these two before you, measure them, and compare sizes. It is a very simple matter to check the groove diameter from these master slugs, but the land diameter is rather difficult to determine unless you have special ball points on the micrometer, as Figure 18 shows. These fit over the anvil and spindle of the micrometer and it is an easy matter also to check this size in the grooves of the master. In measuring these lead slugs, measure all sides, as you will often find one side greater in diameter than the other. Do not clamp the micrometers too tightly over the outside surface or you will never get a true reading, but adjust gently by the spindle ratchet. After being measured, these can be placed in an envelop and marked with the exact sizes, rifle number, and date. If placed in a box so they will not be damaged in any manner, this will be your future record of that particular barrel.

When you are testing for tight or loose places in the bore, notice the smoothness of the bore and locate the rough spots and pockets. To do this in the correct manner, clamp the barrel in the vise between felt jaws. To free the bullet through the barrel, make a wooden knob for the end of the rod, and have it just fit the palm of your hand. If you are forcing the bullet through the bore from the muzzle, grasp the rod by the wooden handle in the palm of your hand, and with the weight of your body, force the bullet through the barrel with a steady motion. Do not allow the master to stop in the entire passage; the slug should go through with an even and gradual speed so that one can easily detect the slightest difference in pressure indicating the tight and loose spots. A little practise is essential; if you repeat this test two or three times you are sure of your findings, which can be chalked on the outside. The best barrels are those which have no tight or loose places, but are of an even and true diameter from chamber to muzzle.

All rifle barrels are at times greatly improved by a careful lapping operation. Most barrels which come from the factory are made in various sizes, particularly the cheap arms, as they require a greater manufacturing tolerance than such government-made arms as the Springfield M/1, and Model 1903. Accuracy depends upon correct bore and groove diameter and a high finish free from

any tool marks. The only way these can be achieved is by a lapping process, after the correct sizes and conditions of the interior are known. Perhaps you have trouble with your barrel picking up lead and metal fouling because of tool marks which are impossible for the eye to detect. The tool marks which pick up this metal fouling can often be eliminated by a careful lapping operation.

I must impress upon the student that every barrel does not need lapping. If a barrel is performing in a satisfactory manner with fine accuracy, lapping the interior is unnecessary. Figure 85 is a full-detail drawing of one of the finest types of lapping rod that can be made. Of course, special tool equipment and a considerable knowledge of mechanics are required to make one. If you should have a number of barrels to do in the course of a year it would pay you to have one made, as an ordinary cleaning rod cannot be used for the purpose.

The improved lapping-rod head, when once made, can be used for any rod. The short shaft is reamed on the end with a standard tapered pin reamer and different rods can be inserted and changed very readily. Two rods are shown; one for the lead to be cast to the end and the other for the leather washers, using fine powdered rouge or lapping compound. All rods are made from drill rod; this gives the required strength, as a lapping rod receives rather hard treatment, and the handles must be large enough to allow of a good grip. In addition you will need a melting pot, a small ladle, and a supply of lead.

The amateur who is not prepared to make so elaborate a rod at first can use a front bicycle hub. Two large wood screws are welded in the center and large file handles screwed in place. Then a rod is welded on the end of the axle, or it can be annealed and drilled out to take the rods and a set screw used to hold these in place.

A wooden handle is also made, about 12 inches long by 1½ inches square in the center. Ends are formed in the shape of handles similar to the old-time hand augers. Different small ball races can be picked up from a junk yard and set in the center of the handle with plates holding them in place, and a small shaft used, extending out long enough to take the rods. Various methods may be used to construct a satisfactory lapping-rod holder of the material at hand, but the best will require some time to make.

The length of time required to lap out a barrel depends upon conditions and what you found when you measured it with the lead masters. The usual time is between two and eight hours, but you had better count on the longer time, for to do the best job you must go slowly and feel your way.

If you have not prepared the barrel for lapping as described in Chapter XVII, the bore must be thoroughly cleaned before work is started. Scour it out and use the metal fouling solution if the barrel is a high-velocity arm, or use mercury to remove the lead if the opposite. Dry and clean the bore after using any of these, and examine it to see if it is free from any foreign substances, such as small pieces of metal alloy which may come off and be imbedded in the lead lap. This might cause a deep scratch in the steel as it is worked back and forth. The lapping rod is first run through the barrel from the breech, and the end is allowed to project far enough to expose the canelures below the jagged tip. Cotton string is then wound carefully into these grooves and the rod withdrawn until the jagged tip is about ¾ inch below the muzzle. The cotton string is used as a seal to prevent the melted lead from running down the bore of the barrel.

With the barrel clamped in a vertical position between the felt jaws in the vise, take a gasoline torch and heat the muzzle of the barrel slightly down as far as the grooves where the cotton string is wound. The required heat is about 350 degrees Fahrenheit; this is done to prevent the lead from shrinking and at the same time to give a full and perfect lap, the same as a perfectly cast bullet when a mould has been heated to the right temperature. Pour the melted lead carefully into the bore until it is flush with it, and allow to cool before examining. If your hand is not steady in the act of pouring it will be advisable to have some kind of support to rest the ladle on so that a steady stream of lead may be accurately poured into the center of the bore.

After allowing a few minutes for the barrel to contract, the lead lap is pushed forward for an examination. Here is a word of caution: at no time should a lead lap be completely withdrawn from the bore. If this happens a new lap should be cast. Before withdrawing the lap to a degree where it is possible to examine it, push it out from the muzzle only about ¼ inch, and with a fine hack-saw cut off the "sprew," being very careful that the saw does not touch the muzzle. Then trim the end straight, and with a jack-knife turn a small angle around the end so that the lapping material can enter around the lead, which charges the lap as it is drawn back and forth. A well moulded lap should not show any deformation but be a perfect cast of the lands and a sharp and well proportioned groove. Should the lap when examined show a poor construction full of blow holes and deep grooves caused by the barrel or the lead not being hot enough,

withdraw it and cast a new one, heating both muzzle and lead much hotter for the next attempt.

Having at last produced a satisfactory lap, clamp the rifle barrel between the felt jaws in the vise and rest the muzzle on the gun brace or pan as Figure 86 shows. The bench should be substantially made and must not vibrate. The end of the lap is pushed out from the muzzle about 1½ inches and the collar placed on the rod, so that it will not come out any further. Also make a suitable stop on the bench, so placed as to hit the rod when it is drawn out from the chamber end and still not be a hindrance. Before any abrasive is used, a small amount of sperm oil should be applied to the lap. This is worked back and forth in the barrel to have the lap set and function properly and turn easily in the grooves. The bearing in the handle should work freely, so that the lap will not ride on either side of the lands and round them too greatly. If you do not have a stop collar on the rear end of the rod a wooden stop can be set at the correct distance from the muzzle in order to eliminate any danger of the lap passing through the barrel. It will be well to cut a mark in the end of the lap and also a mark on the end of the barrel so that it will be possible to enter it again in the same grooves should it accidentally slip out.

The proper abrasive material to use on the lap depends upon the condition of the barrel and the exact results desired. For a badly rusted or pitted barrel where bore size is at the minimum, flour of carborundum should be used mixed with sperm oil to the consistency of a paste heavier than molasses. This may be used very freely. At times it is necessary to use as coarse a grade as 90. In a semi-rusted barrel the flour of emery or carborundum is the most satisfactory. For the slightly rusted barrel 320-M optical emery mixed in olive oil will prove very good. Mixed emery and oil may be applied to the exterior of the lap from a small thin stick, as the end of the lap is exposed from the muzzle. A small amount may also be applied to the interior of the barrel. Flour of carborundum cuts very rapidly and should not be used for too long a time.

The bore is lapped by grasping the auger-shaped handle with both hands and keeping up a steady motion back and forth, coming up to the back and front stops. This steady back-and-forth motion may continue for some time if the barrel is true and straight; but if a bore has tight and loose places the lap must work over these places with short even strokes. These have been marked out with chalk marks on the outside, but the feel of the lap will indicate them also. When the lap begins to wear down and it is difficult to detect these places, take a rod of the same diameter as the bore and upset the end of lap slightly by tapping the end of the rod with a light hammer. Then pull the lap back through the bore; by this slight enlargement on the end it is an easy matter to continue in the tight and loose sections once more as they disappear in the bore. Then the full-length strokes may be applied again. From time to time the paste must be placed on the end of the lap. It is not advisable to use the emery paste continually, but to alternate with special oil mixed as described with emery or carborundum.

The length of time given to use a lap will vary according to the condition, but between five and twenty minutes is about correct. Withdraw the lap, wipe the barrel clean, and inspect. To clean a barrel thoroughly after a lapping operation, use gasoline and then powder solvent. Wipe dry with as many patches as necessary. Examine to see if all the rust marks or pits have disappeared. Measure the bore again as previously described to see how much it has been enlarged, and compare with measurements taken with the masters.

After the required conditions are attained, a new lap is cast and powdered rouge or lapping compound is used for the final high luster. No particular length of time for this operation is required, for these materials do only a slight amount of cutting but give a higher polish. You may continue for one hour and produce no material effect upon the size.

When using flour of emery or carborundum the enlargement of the bore should not exceed 0.0003 inch, particularly in a barrel using jacketed bullets; nor should it be any more for a .22 caliber target rifle, altho .0004 can be lapped out of a barrel which uses lead bullets.

Upon examination one can determine about how much of the paste to use together with the length of time to lap a barrel. If the desired effect is not produced with the first trial, another lap is cast and proceeded with as before. The exact amount of time is not considered when one seeks a fine and highly polished bore. You can never expect to own one by buying a factory-made barrel, for the necessary time cannot be expended on such barrels.

At times it is well to use the lapping compound on a new barrel, as you can often spend between two and three hours with greater results. The lap should be kept in perfect shape and be removed occasionally. It is scarcely possible to lap too much with this compound as it has a greater polishing than cutting effect upon any bore, and there is without a doubt a great improvement resulting in the accuracy of the barrel. At the end of such a treatment the interior of the barrel should be finished with the highest degree of luster, such as

we see on the working parts of a watch. It will be well for the student first to practise on a barrel which has lost its accuracy or one that he does not care much about Carry out exact instructions, for such experience is of great benefit and the practise will enable you to do the same on some barrels in your collection, improving the accuracy appreciably. With this practise you will be able to detect the "feel" and other essential points which I cannot explain or describe. By way of illustration, ask a carpenter how he knows that he is sawing a board straight and he will be unable to tell you. Nevertheless, he has acquired a peculiar sense of touch or such general acuteness of the senses that he knows when the saw starts to "run out." His mind and arm automatically return the saw to a straight line without missing a stroke. It is the same when you are filing out a die. You can file a die, looking only at the surface line, and can detect the instant the file "rocks" from a straight line. I can tell you that I "feel it" but I am unable to tell you what the sensation is. Likewise I cannot explain some of the finer points of barrel lapping; as I have pointed out, they are fundamental, and proficiency and skill must be acquired by practise and experience.

Lapping Shotgun Barrels — The lapping of shotgun barrels requires the use of power in the form of a polishing head, reaming machine, lapping head, or speed lathe. In Chapter XVII, instructions were given to lap a shotgun bore with laps made from hard wood. Such forms can be used by hand very effectively, but when you have power of some description a lap made as Figure 96 shows will produce the desired results. A wooden lapping rod, when used with any means of power, causes too much vibration in the rod and similar conditions on the surface of the bore. This is why cold-rolled steel rods are used with power.

It is necessary to cast the lead over the end of the rod, using a piece of gas pipe as the mould. The pipe should be cleaned out on the inside and made slightly tapered, so that it can be easily removed when the lead is cast. The rod is first drilled on the end and then reamed out with a taper-pin reamer, using a tapered pin in proportion to the size of the rod used. A very good size for either a ½ or ⅝-inch rod is either a No. 4 or 5 taper pin. After the rod is reamed it is sawed through the center with a hack-saw to a length of about 4 inches. Before the rod is split, suitable gashes are made similar to the ones made on the rifle lapping rod to hold the lead. When this is done, remove the burrs from the inside of the reamed hole and insert the tapered pin.

To mould the lead over the end of the rod, clamp the rod in the vise, allowing between 4 and 5 inches of the end to extend over the face of the jaws. Place a washer over the end large enough in diameter so that the piece of pipe can rest on it, and with a piece of putty, moist clay, or asbestos, form a joint and rest a piece of pipe on it so the lead will not run out at the bottom when poured. To center the pipe you can use your eye to get the proper distance between the rod and pipe. If this cannot be done, use inside calipers to center the two.

It is necessary to heat the mould and pipe as you did on the rifle barrel, by using the gasoline torch. The rod and mould must be well heated; have the lead prepared at a heat ready to be poured. Pour in the same manner as you did for the rifle-barrel lap. Maintain a steady stream until it reaches the end. If you stop pouring for an instant, the lap is usually in two or more pieces. Just as soon as the lap sets, drive off the piece of pipe in the direction of the taper.

It is now necessary to turn the laps to the proper bore diameter on a lathe; in the following table are the diameters of the cylindrical portions up to the choke of shotgun bores:

4	gauge	= 0.935	inch
8	"	= 0.835	"
10	"	= 0.775	"
12	"	= 0.729	"
16	"	= 0.662	"
20	"	= 0.615	"
28	"	= 0.550	"
410	"	= 0.410 to 0.425	inch

Many makers vary from these sizes, in some cases as much as 0.005 inch, so it is always well to measure the bore before the lap is turned to the correct size or continue to try it as you turn down the lap, always from the chamber end. After the lap is turned to fit the bore just so it can be pushed through with freedom, turn shallow rings about ½ inch apart for the oil and emery to lodge in, and to help keep the lap lubricated with the cutting compound.

For good lapping, the speed should not be too fast, but about the first cone on an open belt on the lathe. If the speed is too fast on such a large surface as a shotgun bore, the emery or carborundum does not have time to do its most efficient work. Always keep the lap well supplied with the cutting abrasive and also with the oil mixed as it was prepared for the lapping of rifle barrels. As the lap begins to wear down, lightly tap the tapered end to expand it well against the walls of the barrel; not too tightly, but just so that it will do its best work at all times. When it is too tight it tends to heat the barrel too much, and when you only have

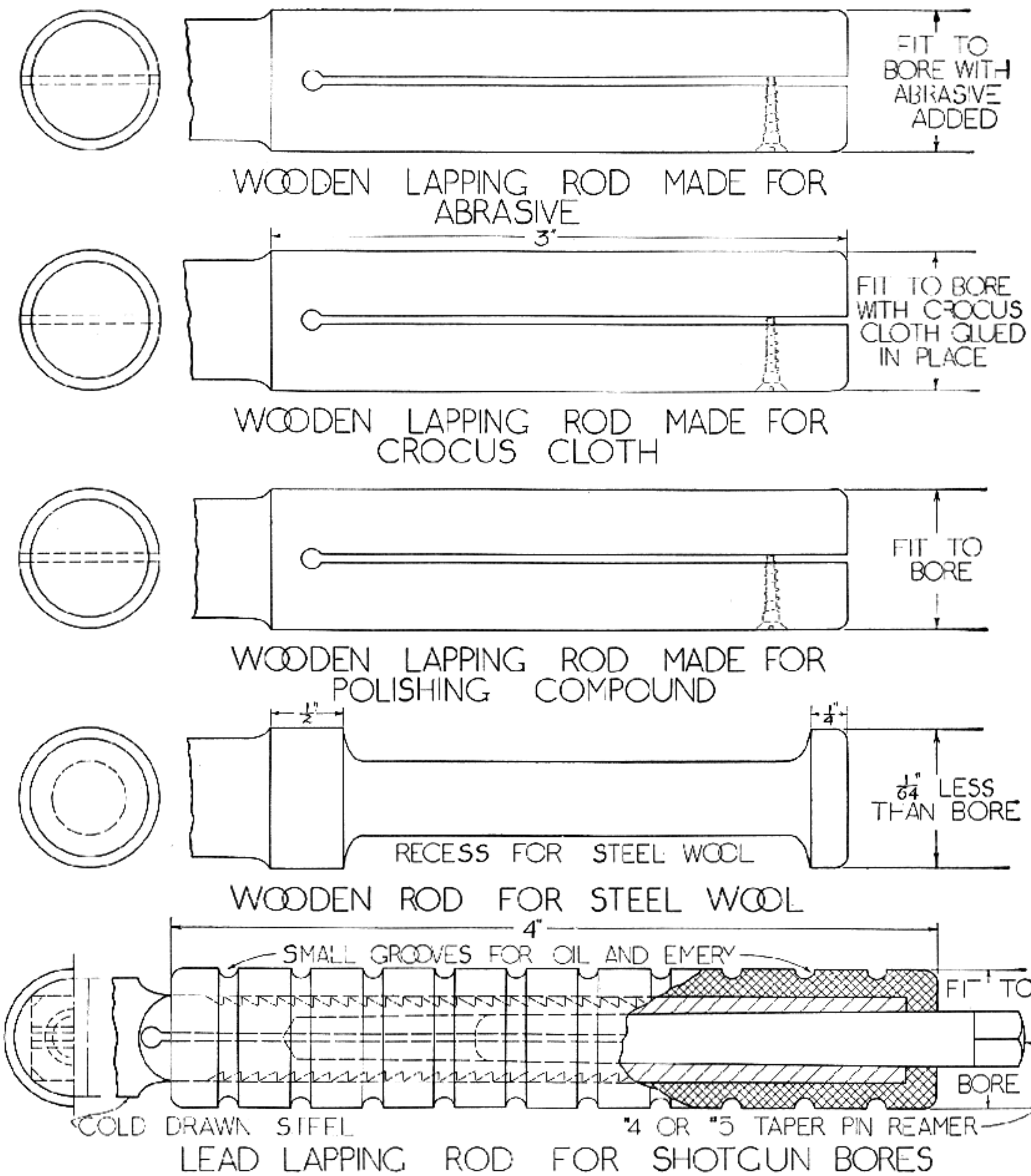

Fig. 96

Lapping-rod tips used for polishing shotgun-barrel interiors

ribs which are soldered to the barrel, extra care must be used to see that the heat is not generated to a degree which will separate the barrels from the rib. If it is a single-barrel trap gun, care must also be used so that the heat does not affect the ventilated rib, which is also soldered on.

A lead lap made in this form will cut very rapidly; therefore examination of the bore should be made to see that too great an amount of metal is not removed. The abrasive to be used depends upon the condition of the bore. If it is pitted very badly, it will be best to use No. 120 at first, and then gradually use the finer grades when finishing up. If you find it necessary to reduce the choke, turn down the lap to fit it, and then continue to lap it out for the desired pattern.

Lapping Out Choke for Pattern — Shotguns are given different chokes, such as full choke, three-quarters choke, modified choke, quarter choke, or improved cylinder, straight cylinder. These may also be expressed as a certain percentage of pattern; a full choke barrel usually gives about a 75 per cent pattern; a three-quarters choke will give about a 55 per cent, and a modified choke 40 per cent or better. Then we have the true cylindrical bore, which is the straight barrel.

You may have a full-choke gun which you wish to reduce to about a 60 per cent pattern. Since the choke on a full-choke gun is about 0.030 smaller than the bore, you must lap out between 0.008 and 0.010 inch to produce these results, or you may spoil the pattern altogether. A full-choke gun is usually adapted for trap shooting; such a choke as this is really out of the question for the all-around gun, and a 60 per cent pattern is far better to use.

Two lapping rods should be made, one for the bore and one for the choke of the barrel. The barrel lap, when completed, can be washed out with gasoline, and then the finishing operation with the powdered rouge and oil or the lapping compound is employed. It will be well to make these two lapping rods if you have a number of barrels to lap, and then the expansion will not be too great in either rod. When you change from the bore to the choke or vice versa, the length of time you spend to polish a shotgun bore with the rouge or lapping compound is of no material difference as these do not cut very much but give a highly polished surface to the metal.

When lapping a shotgun barrel, be careful not to get it too greatly oversize; judge by the figures given in the table for shotgun bores. We have the same conditions to consider in shotgun barrels as in rifles—the badly pitted bore, the semi-rusted and slightly pitted condition, and the slightly rusted bore—so we must treat each in a different manner but all with the same degree of forethought.

There is a much simpler method of polishing out shotgun bores and chokes—with the split lapping rod, emery cloth, and No. 7/0 sandpaper. Use a piece of cold-drawn steel rod; ⅝ diameter for 16, 12, and 10 bores; ½ for the 20 and 28 gauges; ⅜ for the .410. With a hack-saw, split the end about 4 inches through the center, and wrap emery cloth around the rod, one end fastened in the hack-saw slot, to hold it in place during the lapping process. The grades of emery cloth used depend upon the condition of the barrel; coarse for the roughing operation, medium for the intermediate condition, and the fine, together with the crocus to finish, or the No. 7/0 sandpaper to be used before the crocus, when it is found necessary. It is surprizing what a wonderful finish the fine sandpaper will produce; it is just a matter of choice between it and the crocus. When using the emery cloth, paraffin oil or lard oil must be supplied to the inside of the barrel as well as to the surface of the cloth to produce the best results. Fine sandpaper or crocus cloth must be dry to produce the high finish desired, but before using either one of these the barrel must be washed out thoroughly with gasoline and wiped clean with canton-flannel patches. The speed should be the same as for lapping with the lead lap, and the emery cloth must always be tight against the inside; not too tight, but so that it will do its best work. You will be surprized to see what good work can be accomplished with such a simple method of lapping.

Lapping Chambers — This is an operation which requires much care, and only in rare cases will a chamber require such treatment. It becomes necessary when the chamber has become rusted and small pits have formed, making extraction more or less difficult, and then only on the taper where these places exist. The usual method employed is to cast a lead lap into the chamber on a cold-rolled steel mandrel. The length of the lead cast must be gashed in a manner similar to that of the ends of the lapping rods. The mandrel is made or turned down on the end to allow enough lead to be cast to form the neck portion of the chamber, with enough body to allow it to work effectively at that point.

To cast the lead lap in the chamber, the barrel must be removed from the receiver, a cork or piece of soft wood driven into the rifling, and the mandrel inserted, well centered. The chamber end is heated to a much higher degree than at the muzzle to expand the steel at that point, so that when it cools off the lap will fit the chamber very tightly. Pour the lead in the same manner as you did for the barrel lap, and when it cools to a certain degree, remove by inserting a cleaning rod from the muzzle and back it out. Examine the lap to see if it is a true reproduction of the chamber; if not, a new lap must be cast. Assuming that a perfect lap has been made, the barrel is clamped in the chuck and trued up so that the chamber does not run out over 0.002 inch. A lathe dog or a similar holder is fastened to the lap mandrel in order to have a means of holding it while lapping.

Very fine flour of emery is used mixed with olive oil to a very thin consistency. The lap is then coated with this and placed in the chamber. As the rear part of the chamber is on a taper, the lap will have a tendency to work ahead rapidly, and at times to a degree where it will stick and be torn out of the hand. The proper motion given to such an

operation when lapping a taper is gradually to let the lap work forward until it becomes tight, withdraw it at once, and start over again. This motion is only a means to prevent the forming of rings on the taper. When the lap becomes loose and hits the shoulder it must be filed back, only allowing the lap to work upon the taper. If the shoulder only is to be lapped to increase headspace, at least six laps must be cast, for one alone would place very bad rings on this part. Laps for the shoulder alone must be made to be effective at that point only; the other part of the lap is relieved and does no work.

This method of lapping a chamber is liable to prove very unsatisfactory. In the first place, it is difficult to secure a smooth surface because the tapered lap cannot be moved across the surface; moreover, the lap tends to cut round grooves into the work, as it often remains in one position, and imperfections in the chamber will to some extent be transferred to the lap. Care must be exercised to see that the end of the chamber is not enlarged too much, because the abrasive is gradually carried outward toward the mouth of the hole by the centrifugal force, which, of course, increases as the diameter of the hole increases. Two laps should be used, one roughing and one finishing (if a smooth hole is necessary), before the fine emery cloth is used. Shotgun chambers are the easiest to lap as the taper is very slight, and revolver cylinders require a straight or slightly tapered lap. These may be turned out of cast-iron or copper. The lap is chucked in either the lathe or drill press. In Chapter IV, Volume I, an illustration shows a set of lapping arbors together with the style of laps used for straight holes. This is employed to lap the cylinders of revolvers, where each one is the correct size, for once a lap of this style is set, it is possible to alternate from one chamber to the other and they must all be the same size.

Sometimes when the chambers in .22-caliber arms become very badly pitted, the soft copper of the case will imbed itself in the rust pits, and the extractor will not remove the exploded case. If these pits are not too deep, the chamber is lapped out in a different manner. Take a small piece of drill rod, saw a slot in the end, wrap with fine emery cloth, and tighten in the chamber. With the opposite end caught in the chuck of the hand drill and the barrel clamped between the felt or lead jaws in the vise, continue to lap the chamber until the pits are removed. This is not advisable if the defects are too deep, for this would enlarge the chamber to such an extent that the fired cases would split. Be very careful when lapping a chamber in this manner not to make it larger in the front end than in the rear. This may be avoided by working the lap back and forth a short distance. Frequently the extraction is perfect after such an operation on these chambers.

On .22-caliber automatic rifles such as the Winchester and Remington, which are difficult to clean from the breech, the chambers become rusted and pitted, causing the rifle to jam; but with the above treatment these arms can often be made to function perfectly after the chamber has been highly polished and the rust spots removed.

After the student becomes proficient in lapping operations pertaining to firearms, he will find that a number of them may be profitably employed in other classes of work where close limits are to be made, such as gauge and instrument work, fine tool making, etc. You will judge for yourself what can be done in other lines of mechanical work.

CHAPTER XIX

Special Gun Parts and Their Construction

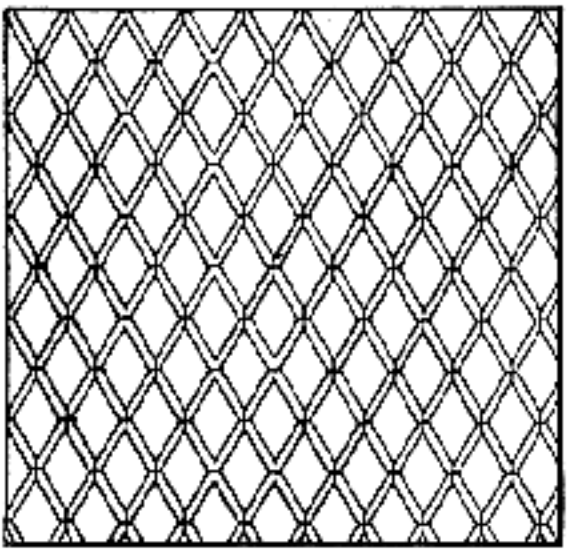

CHAPTER XIX

Special Gun Parts and Their Construction

MODERN methods of gun construction often call for parts with greater refinement than those which can be purchased from the usual source of supply. Arms companies specialize only in their standard products, so the individual cannot secure special parts but must construct them himself. Many parts can be made in the shop by hand—presuming that the proper machine tools are available. Very little space can be given to the description of all types of machine tools; the principal purpose will be to explain the parts and the practical problems connected with their construction and with the art of adding beauty to the general outlines of a piece having a definite purpose in a firearm. No attempt will be made to describe all parts, but I shall try to give all the most essential ones in an ideal rifle or shotgun. Modern rifle making, particularly that side of the work calling for custom-made arms, requires the specification for special parts in accordance with an individual's ideas, while others have been made in the gun shop and made part of the gun itself. We shall think of these in terms of improvements; they are not the ideas of one person, but have been developed gradually by many people.

The remodeling of the military rifle has evolved some excellent ideas and brought the target revolver and pistol into popularity. These have brought into accepted use many small parts not known on the standard factory arm. They are, perhaps in many instances, not essential to the functioning of a firearm, but they do offer convenience of handling and greatly improve its appearance. Many parts cannot be adequately covered in this chapter, and in response to a demand for more comprehensive and detailed treatments of the more important ones, they are treated in other chapters. This, however, will cover some of the principal parts which call for various machine operations, even tho these may be treated elsewhere; here they will be treated in a different manner, and there will be conveyed to the reader ideas which he can elaborate upon for his own particular needs.

Front-sight Ramps — There are two styles of front-sight ramps; one is integral with a band which encircles the barrel, and the other rests on top of the barrel without the encircling band. In my opinion, the latter with its neat, graceful outlines, is the better; the encircling ring on the forward portion of the barrel breaks the outlines of the gracefully tapered barrel ramp. I can remember when Colonel Whelen and I made the first ramp and placed it on a Springfield rifle. The first ramps we designed were short and ungraceful in appearance. I still have one of these in my possession and like to look at it, for it brings back fond memories of our close association. Years have gone by since then, but those experiments were the means of bringing some valuable information to the reader of this book.

The ramp is a great aid in preventing barrel mirage in holding the front sight on an object and consequently disturbing one's aim. It also permits the use of interchangeable front sights. On a ramp where the blades are dovetailed into a tapered slot it is always possible to place them in the exact center and eliminate the standard blade sight altogether. The sight is placed very low in the top of the ramp and protects it from being bent, which happens so often.

Figure 97 illustrates twelve standard styles of plain barrel ramps which are machined from $\frac{5}{16}$ x $\frac{5}{8}$ inch cold-drawn steel. Others may be formed of $\frac{1}{2}$ x $\frac{5}{8}$ inch steel and machined to a width at the top of $\frac{5}{16}$ inch, holding the bottom width of $\frac{1}{2}$ inch. This ramp should be made on the milling machine, but if special straight blades are also shaped to fit into a 0.170-inch slot they can be made on a shaper. The blanks for the long ramp are cut to 4 inches in length and then milled with a $\frac{5}{16}$ radius cutter on one side of the $\frac{5}{16}$-inch width, or to the exact radii of the barrel. The $\frac{5}{16}$-inch radius is for standard Springfield barrels, but other radii must be made according to the diameter of the intended barrel. The $\frac{9}{16}$-inch height is used for the Springfield with a standard rear aperture sight which gives a height of $\frac{1}{8}$ inch over the top of the ramp. Ramps for different rifles are made in the following heights: $\frac{5}{8}$, $\frac{9}{16}$, $\frac{1}{2}$, $\frac{7}{16}$, and $\frac{3}{8}$ inch. After the height is determined, the incline is milled, allowing for the straight portion, which is governed in many cases by the height of sight used.

To determine these heights, a sight-setting gauge

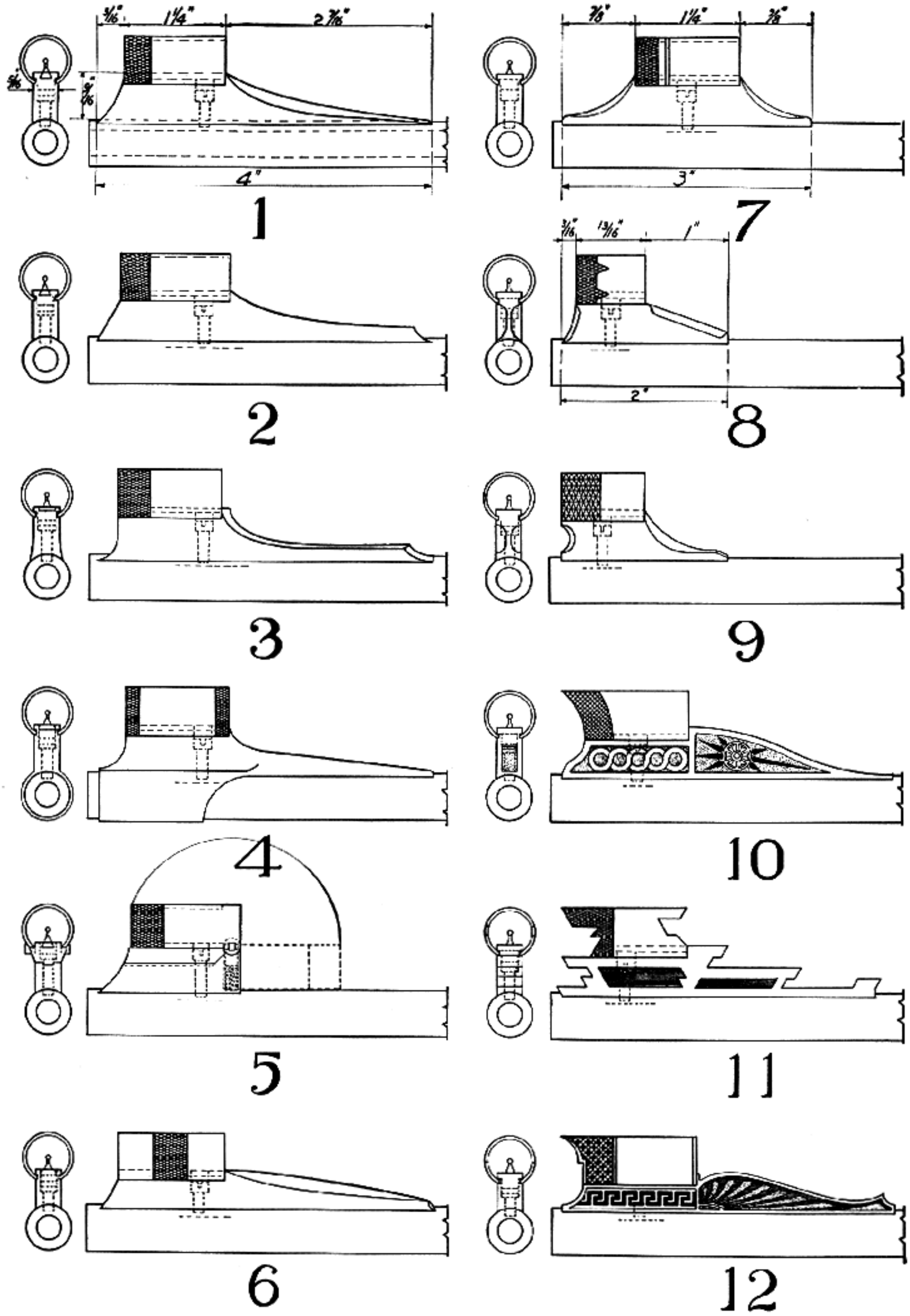

Fig. 97
Designs for front-sight ramps and covers

is used as illustrated in Figure 98 for the Springfield Model 1903 and Mauser .30-caliber rifles. A gauge of this design can also be made for other calibers and makes of bolt-action rifles, but since these two actions and the caliber are among the most popular in the United States, a gauge of this nature is almost necessary if many ramps are to be placed on bolt-action rifles of the military type.

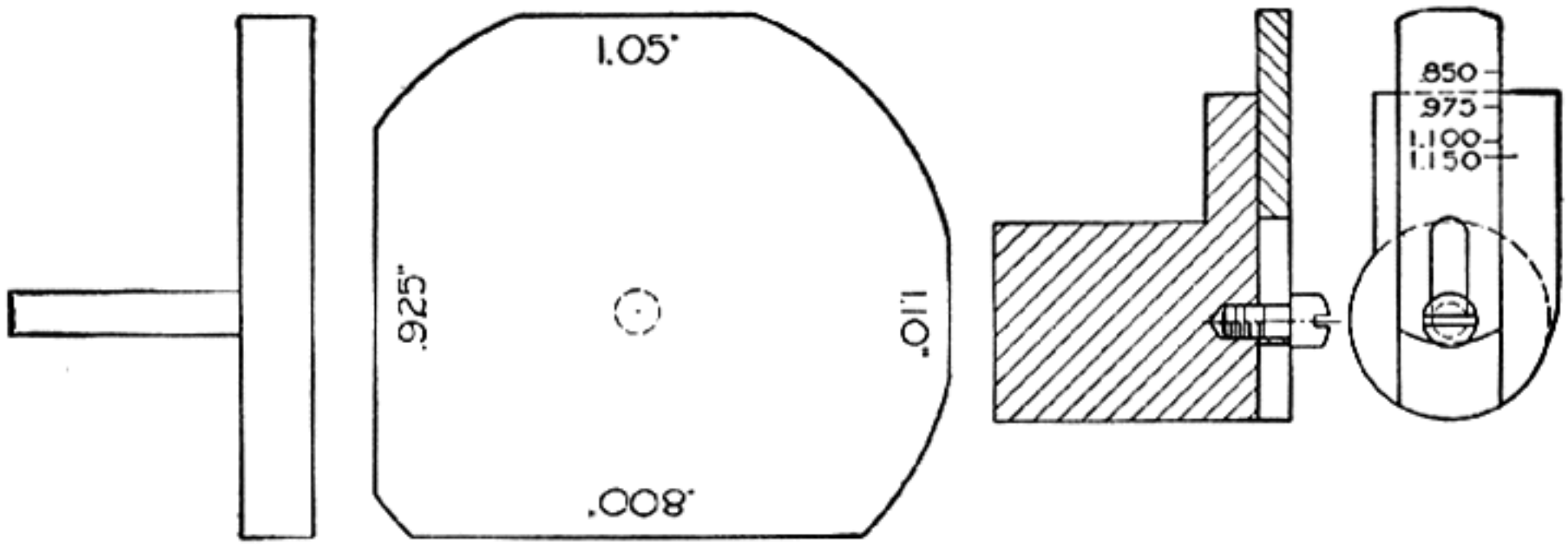

Fig. 98
Sight alining gauges, front and rear

The muzzle gauge is turned from a piece of 2½-inch diameter cold-drawn steel; the end projection is made to the exact diameter of the bore, and the flats milled or shaped to the following heights from the center: 1.100 inch for target rifles using an aperture rear sight and shooting for long ranges; the 1.050-inch height for the standard Springfield height in connection with a rear aperture sight; the 0.925 height for leaf sights and a cocking piece sight of the aperture type which is set 0.150 inch lower than the standard; the 0.800 height for the low settings of leaf sights, the lowest sighting arrangements on a Springfield rifle allowing the line of sight to clear the bridge of the receiver.

The rear gauge is turned from a piece of cold-drawn steel and the projection just pushes into the receiver at the rear. The end is slotted and provided with a slotted adjustable piece acting as a height gauge. The graduation is plus 0.050 inch, which is a height corresponding to the height of the muzzle gauge. The difference in figures allows for trajectory at 100 yards, or any other discrepancies which might be necessary for sight settings using an aperture sight. When leaf sights are constructed and placed on a rifle barrel, the height of the front-sight blade must be determined by actual firing at an object at a given distance.

Before the slot is milled, a hole is drilled in the center of the ramp at the beginning of the incline and is counterbored to a depth so that the head of a 6 x 48 screw will clear the bottom of the sight. By sinking the head to this depth it is impossible to see the screw after the sight is driven into place. The head should be turned to the sight width; a No. 14 drill size is usually employed, which acts as a counterbore. The milling of the slot lengthwise is of standard width, fits the factory sights made for it, and is constructed in various heights and diameters of ivory or gold beads. The milling of the slot should be just wide enough so that the sight can be pushed in without any play; it is possible to remove it easily whenever it is to be changed to some other style of sight. Next in order is the milling of the side slots to hold the sight cover or protector. The usual width of these slots is $\frac{1}{16}$ inch and the depth 0.020 inch. The length should be about $\frac{3}{16}$ inch ahead of the sight. These sight-cover slots must be milled opposite each other or the cover will be off to one side, which is annoying to a well trained eye. So that no mistake will be made in the exact location of both slots, a $\frac{1}{16}$-inch hole should be drilled in the extreme end of the intended slot. In the operation of reversing the ramp to mill the opposite side, the cutter can be set exactly to the width of the drilled hole and the cut taken lengthwise.

Number 4 in Figure 97 illustrates the encircling-band ramp-front sight base. This has become a standard, since it is now manufactured by two or three private companies; however, it is far from having any beauty or graceful outline, and the most satisfactory one will be one made by yourself. The most practical way to make it is from a blank of either machinery or cold-drawn steel measuring $\frac{7}{8}$ x $1\frac{3}{8}$ x 4 inches. The hole is drilled and reamed to the diameter of the barrel, and with a mandrel pressed in the hole, the blank is set in the milling machine vise and two straddle mills are spaced $\frac{5}{16}$ inch apart on the arbor. The end is laid out in exact center to the $\frac{5}{16}$-inch width and milled the entire length of the blank down to within $\frac{1}{32}$ inch of the mandrel.

Having removed the desired width of the ramp, the blank is reversed and held by the milled section in the vise and a concave cutter is used to the exact diameter of the band, allowing the thickness when completed to be $\frac{1}{32}$ inch of wall. After the radius is milled off the bottom, there still remains surplus material on each side of the band to be removed with a side-radius cutter with the ramp section still clamped in the vise; first one side and then the other is removed until a complete band is formed. Remove the mandrel and with a ¾-inch diameter end mill, remove the rear portion of the

band to the desired length. Be very careful that the end mill does not remove too much stock alongside the ramp; since there is only a small amount left, it can be filed until the sides come flush with the under radius of the ramp.

The next operation is the milling of the ramp incline, which can also be done in the vise by holding the back section of the ramp between two parallels clamped between the jaws of the vise. All surplus metal being thus removed, the ramp is now filed and polished; the dovetailed slot and sight cover slots are milled, and the ramp is ready to be sweated to the barrel. The method of securing the top barrel ramps without encircling bands is to secure them to the barrel with a 6 x 48 screw. First, line the ramp in the exact center of the barrel, spot through the drilled hole into the barrel, and then drill for the tap size. Be very careful not to drill through the barrel. The depth should be within $\frac{1}{32}$ inch of the bore; this gives between three and five threads or even more on a heavy barrel. While the ramp is still in place with the parallel clamp, tap the hole. After the clamp is removed, the screw may be fitted until it clamps the ramp very tightly; thus the ramp is prepared to be sweated in place. Tin both the ramp and barrel and then screw the ramp down on the barrel; use as much pressure as is necessary to pull the screw into place. After heating both the barrel and ramp until the solder will run, bring the screw down in position and cool in water. A ramp of this kind sweated and screwed into position will never come loose, and after it is finished as the illustration shows, it has graceful outlines. A matted or checkered surface on the incline is very attractive. Artistic forms of ramps can be made, as the illustration will show; with these before you, others may be figured out which may be far better in appearance.

Sight Covers — All ramps should be provided with a sight cover or protection to be attached to the ramp. There are two styles of covers illustrated in Figure 97, and both are made of $\frac{5}{8}$ x $\frac{1}{2}$ inch Shelby tubing. The plain type which slides in the grooves milled on the side of the ramp is first knurled on the end and cut off to the desired length. A $\frac{17}{32}$-inch drill is run through, making the wall thickness of the cover $\frac{3}{64}$ inch; then a $\frac{1}{4}$-inch hole is drilled close to the knurled section and with a hack-saw this section is cut out to the end to the same width as that which the drill made. The bottom of this slot is then filed flat, allowing only a thin holding edge. The slot is filed until the cover can be pushed on with a little effort, yet not so tight that it is sprung apart. The most satisfactory method to hold a cover in place is to drill a $\frac{1}{16}$-inch hole in the ramp slot $\frac{1}{4}$ inch from the rear of where the cover comes in place. A $\frac{1}{16}$-inch pin of drill rod is driven in; both ends should be rounded and the projection of the pin on both sides should be just under the surface of the sides of the ramp. With a round needle file, remove two cut-outs so that when the cover is pushed over the pin it will snap into this position, which locks it in place. When a catch of this kind is made properly a cover will never be lost even tho the rifle is shot a number of times while it is in its locked position.

The finest and most practical sight cover is the snapover cover illustrated in Number 5, Figure 97. This cover is pinned through the rear; the pin has two flat sides, and in the center, a spring and plunger are used to hold it in either the covered or uncovered position. Sufficient friction is allowed on the front so that it requires a little effort to pull it up. In the uncovered position the cover lies along the barrel in the rear of the sight base, exposing the sight to the full view of light; then when the shooting is over, all that is necessary is to snap the cover back into position, covering the sight from any accidental knocks when returning to camp. The plunger and spring are essential parts of this sight; they hold it in either position; altho a pin could be placed in the end and riveted until the cover becomes friction tight, this soon wears and much lost motion is exhibited.

The forming of the cover must be done on a form, but the making of the cover is done in the same manner as that used on the plain cover described in the first part—except that instead of the hole being drilled next to the knurled section it is drilled $\frac{1}{4}$ inch from the rear section and the front is cut out. After the first section is removed, a hack-saw is used to part the center of the web and then these two ends are turned out, forming two ears to the exact width of the ramp. To form them, a piece of steel must be drilled out and reamed so the cover can be inserted. A section is either milled or sawed out, allowing the thickness of metal to form the width over the ramp. An arbor must also be placed on the inside, and the metal forced well out against the walls of form. With a small chisel, turn the ears up and with a wedge-shaped form, drive it in between, forcing the metal out until perfect ears are formed. Remove the cover from the fixture, file it neatly, and drill two holes through the center of the ear; file a small square in one. When everything is assembled in position, the large hole is drilled through the base in the desired location; a hole is also drilled for the spring and plunger. After all parts are blued, they are assembled and the pin riveted into place, using sets

which will form neat heads on the end of the pin.

Front-sight Fastenings — There are various methods of fastening a front sight, but only two will be given here; one is by a screw and the other by a plunger. The most common method of holding caterpillar sights with dovetailed bases is with a 2 x 56 fillister-head screw; the head is counterbored into the blade and screwed in the ramp. The screws used to hold these sights in place should be case-hardened; if not, when they are set in place for a great length of time they become rusted in and are very difficult to remove. Figure 99 illustrates two plungers that are very practical to use

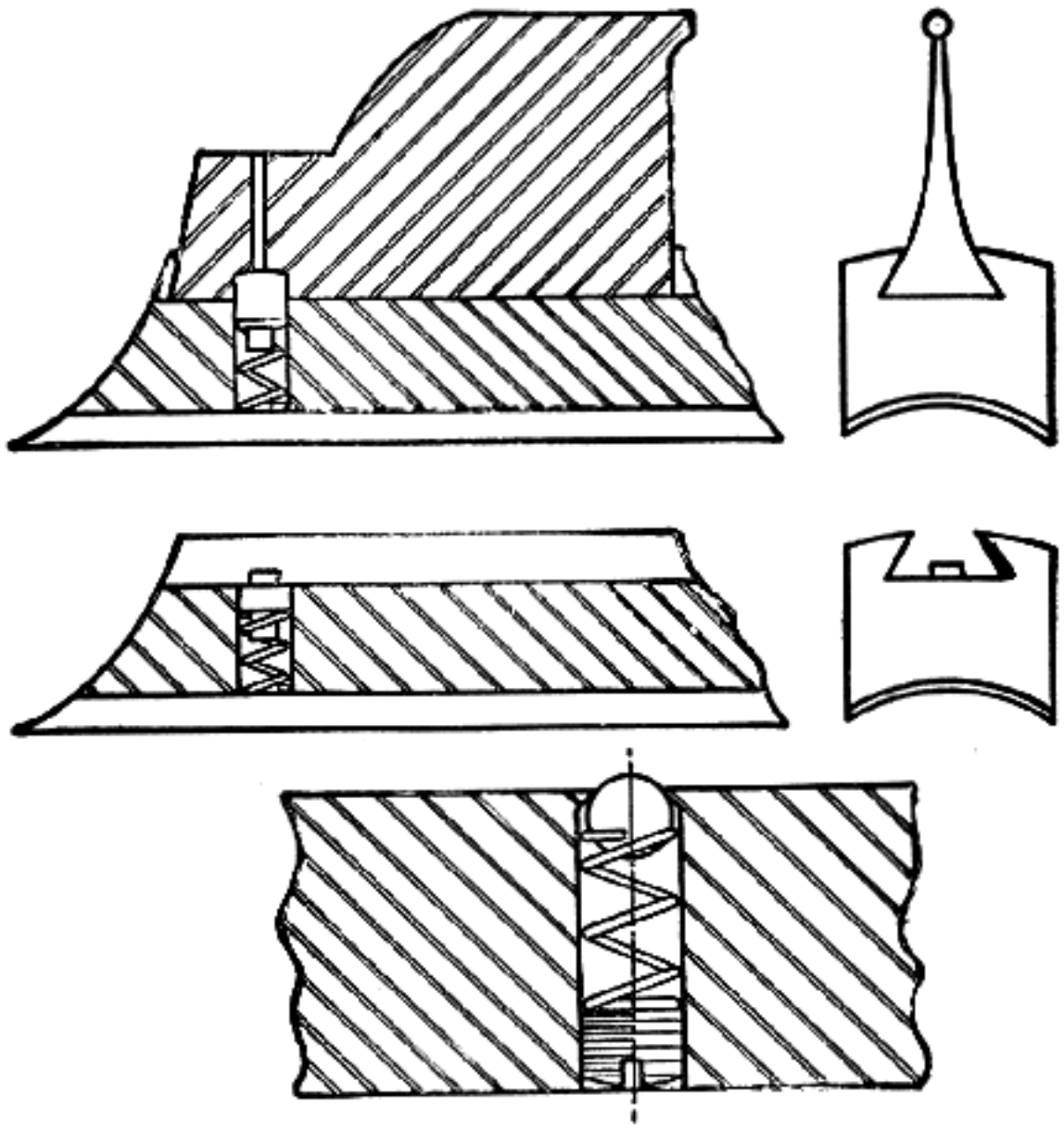

Fig. 99
Plunger positions for holding sights and other movable parts in position

in connection with the caterpillar style of front sight when fitted into the ramp. They may also be utilized for a number of other things in the construction of firearms. One style has a radius formed on the end and the other has a tenon turned on the upper end of the plunger. The plunger is located on the front end of the ramp, and to have these in the exact position, a No. 60 drill is first used to drill in the center of the sight well down into the ramp when the sight is placed in its correct position. With this center hole drilled, the sight is removed and counterbored on the under side to a depth which will allow the radius or tenon to center. The spring and plunger hole is drilled in the ramp to a depth allowing the free movement of the spring and plunger. When the sight is fully in place with the spring and plunger assembled, the plunger snaps up into the counterbored hole in the under part of the side, thus holding it in place.

If a number of interchangeable sights are required, they should all be fitted first. The plunger and spring are drilled completely through the ramp so that the exact position of the tenon holes can be located in the under side of the caterpillar sight. When sights are to be changed in the field, insert a pin into the small hole, push the plunger down to clear the base of the sight, and gradually push the sight forward out of the dovetailed slot. Always remember to hold the thumb over the plunger as the sight is removed so that plunger and spring will not jump out of the hole. An elongated slot can be placed in the plunger and a pin inserted through the side of the ramp to hold the plunger in place for those who are rather absent-minded.

Plungers are turned from drill rod and should fit into the hole freely. Drill rod of the correct size, which only requires the turning of the tenon or the filing of the radius on the end, should be selected. The center tenon is turned to fit the inside diameter of the spring; this only requires a very short end

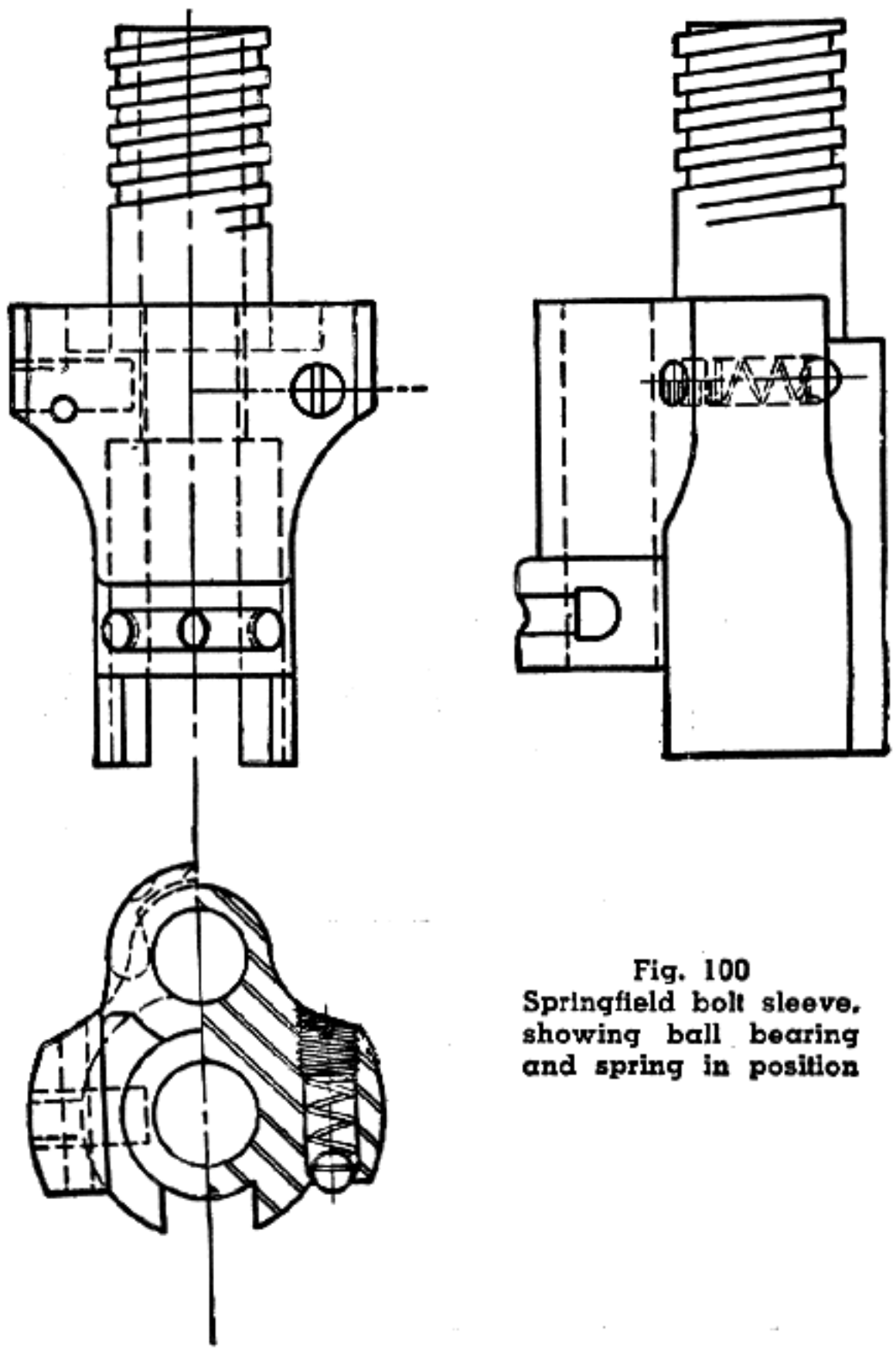

Fig. 100
Springfield bolt sleeve, showing ball bearing and spring in position

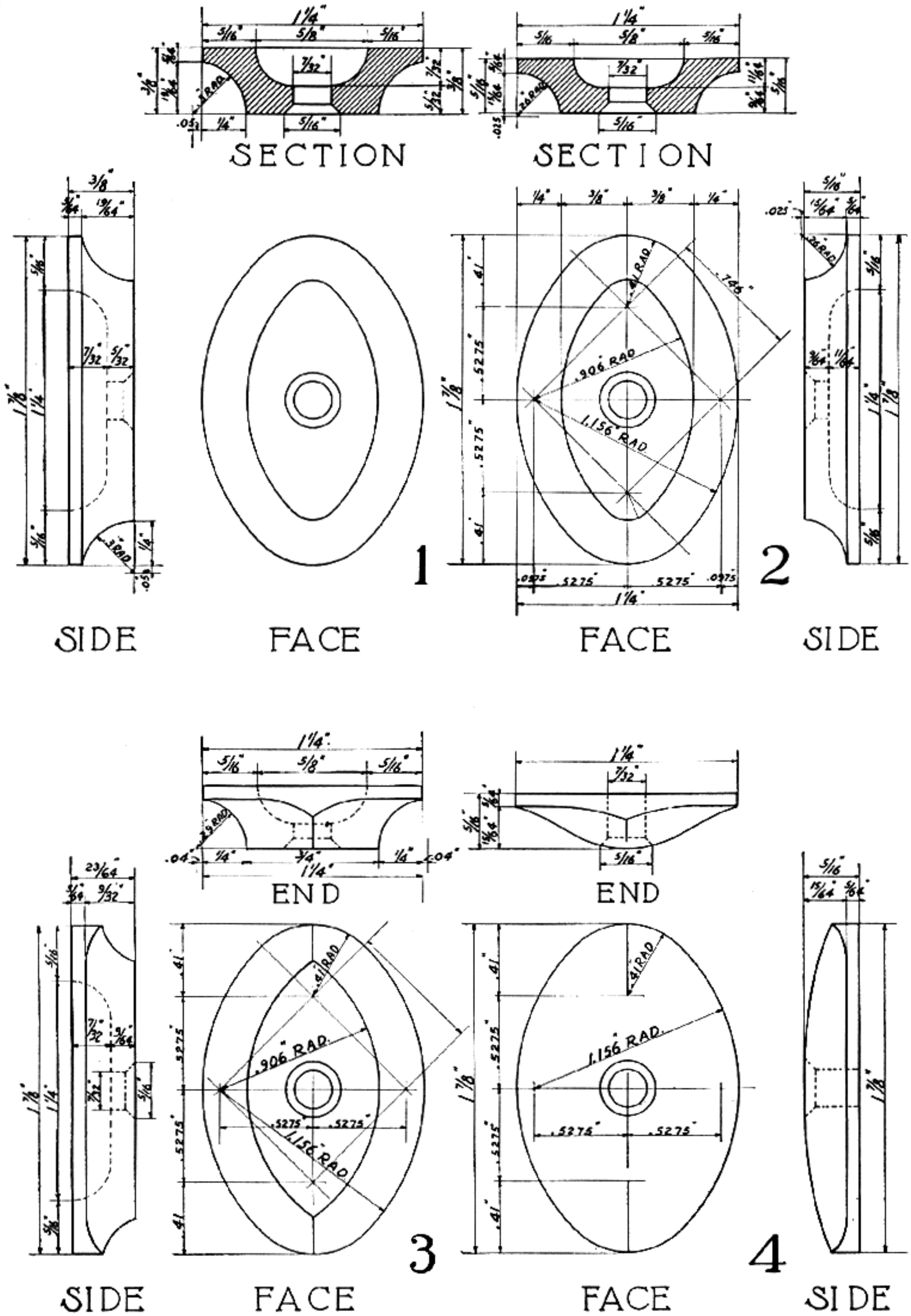

PISTOL GRIP CAPS MADE FROM BUFFALO HORN, ALUMINUM, BRONZE, BRASS OR ANY MATERIAL

Fig. 101
Layout for specially designed pistol-grip caps

in order to keep the spring centered in the hole. If a pin is inserted through the ramp to hold the plunger in place, the small elongated slot may be filed out on the side with a small square needle file. A plunger which is to be subjected to much wear should be hardened, but those which only hold parts in place, such as sights, etc., do not require any hardening.

The plungers shown in Figure 99 have many uses. Ball bearings can be used in place of plungers with springs back of them; one may be inserted on the right-hand side of the bolt sleeve. Figure 100 illustrates how they are held in place. The main reason for placing a ball bearing at this heavy portion of the metal in the sleeve is to hold the cocking piece in position when a sight is placed on the end. A ball bearing with a heavy spring behind it forces the sleeve over to the opposite side and at the same time gives assurance that the cocking-piece sight will be correctly alined each time the bolt is closed.

Springfield Armory should drill and tap these holes on all sporting arms, forming the bottom to take a $\frac{5}{32}$-inch ball bearing and tapping the upper end for a 10 x 32 screw, even tho this hole is not used for any other purpose than to remove weight. Then when any one wishes to use a cocking-piece sight, the hole is there. This would eliminate annealing of the sleeve, which is required when a sight is used on the cocking piece. It is very simple in the sequence of operations before the sleeve is hardened, but when the gunmaker must anneal and reharden it again, it requires the proper furnaces.

Similar plungers or ball bearings may be placed in bolts in some bolt-action rifles to act as a catch. At times the handles of such arms jump up in the act of firing; this may be eliminated by setting a ball bearing in the edge of the receiver wall with a spring behind it or even a ball-end plunger, and then drilling a small depression in the front edge of the bolt handle where it touches the plunger. The spring forces the rounded end of the plunger into this depression, holding the bolt handle down firmly until it is raised, which requires but little effort by the shooter. A similar plunger or ball bearing can be set through the bolt and the depressions placed into the wall of the receiver. Plungers and balls can often be used in places of advantage, and after their usefulness is known they can be applied to all makes of arms.

Pistol-grip Caps — A pistol-grip cap is one of the essential parts of a remodeled or even a new firearm. Figure 101 illustrates standard designs of caps, allowing the maximum sizes to predominate. Naturally, smaller sizes are required, necessitating

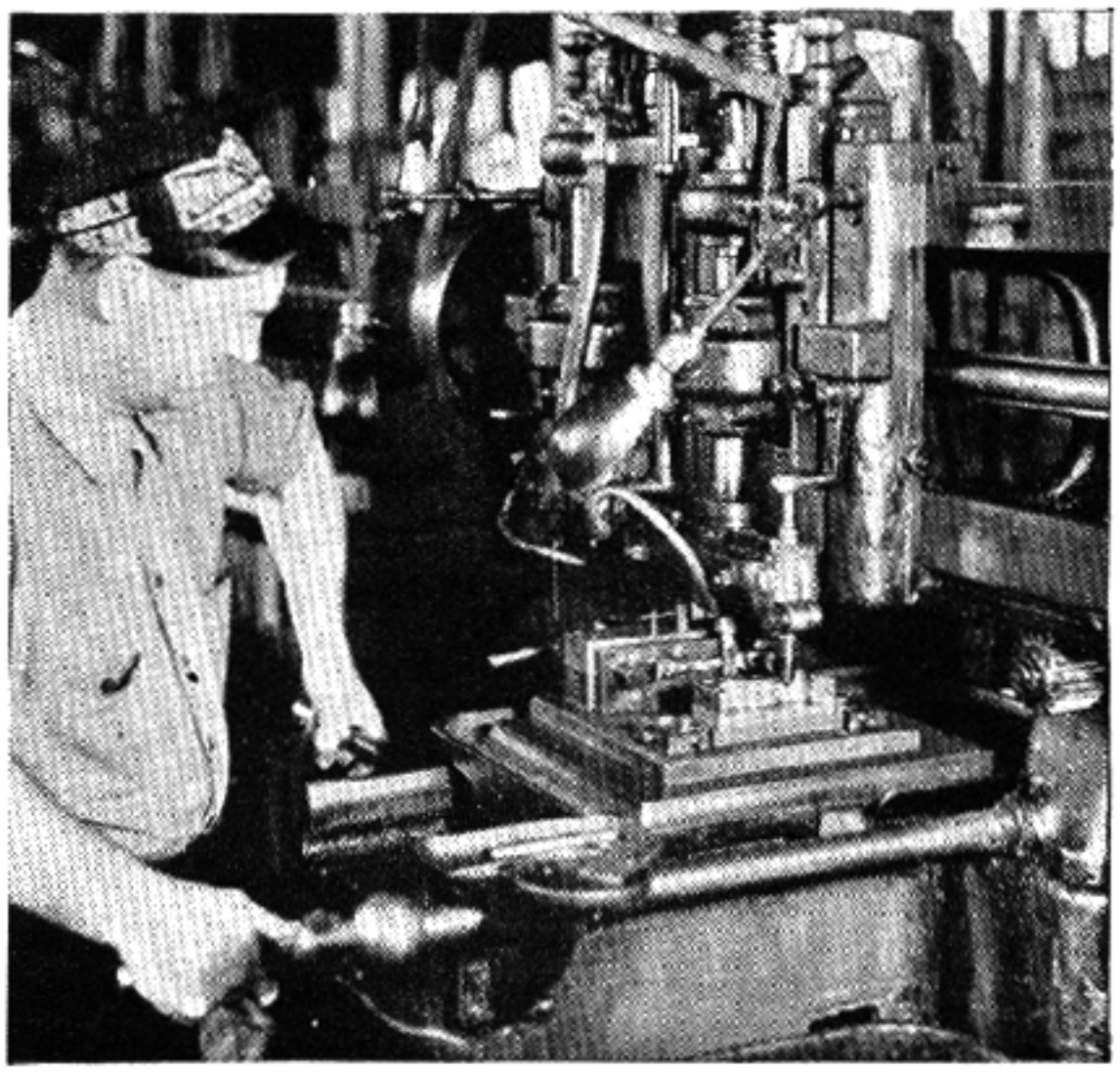

Fig. 102
Profiling of parts as performed in the Remington Arms plant

reduction in proportion to these figures. This rule also applies to larger caps. Grip caps of any material may be constructed from the figures given. Buffalo horn is the most desirable, and next in order is steel.

The construction of pistol-grip caps shown in the illustration requires a set-up on a milling machine or a profiler, using a vertical form cutter in either case. (Figure 102 shows a profiler in operation.) If a milling machine is employed, a rotary attachment is clamped to the milling-machine table and a vertical attachment is set up on the machine. A vertical miller may be used if one is included among the shop equipment. A special disc must be made with a projection to fit into the center hole. Tee-slots are also milled in this place to clamp the cap in position while being milled to the outer edge to get the proper radius. After one side is milled it is reversed and the opposite radius is milled. The end radius may be partly milled and then finished by filing. A profiling machine is a production machine capable of duplicating parts with odd forms, and a profiling operation mills the entire outside from the cap. First, a steel templet or master must be made and mounted on the side the finger rides, and in the revolving head is mounted a form cutter the exact duplicate of the cap wanted; as the finger or indicator rides around the form or templet, the cutter duplicates this and mills the cap out to form. If special designs are desired, new cutters are made for them. It is rather expensive to turn out steel caps on this machine except on a production basis; if only a few are required, the

milling machine is the best set-up for an accurate machine cap.

These caps can also be made by hand from bakelite, radio panels, ebony, aluminum, copper, brass, buffalo horn, and ivory. A templet is first laid out on a piece of 3/64 sheet brass or steel and from this the caps are laid out and the center screw hole drilled. If a piece of buffalo horn is selected, simply cut out the form with a coping saw, and by the use of a sandpaper disc mounted on the grinder spindle the form can be ground down to the scribed lines and with a little filing the edges made perfectly smooth. Countersink the screw hole. By mounting the cap on the end of a piece of about 2 x 2 inch hardwood it can be tightened in the vise and the form filed on the outside of the cap to any desired shape, as shown in the illustration. After filing it to shape, use fine sandpaper to remove all file marks, and as it is still mounted on the wooden holder, polish on a muslin buffing wheel with rouge. By mounting the templet on the pistol grip of the stock, the wood can be formed up to this until it is perfectly even all around; then mount the cap. A piece of 1/32-inch sheet silver may be cut out to the templet and mounted under the horn. The silver forms a neat contrast when worked down even with the wood and cap.

Any of the pistol-grip caps shown in the illustration may be cast from aluminum, brass, bronze, or cast-iron, by making a wooden pattern and sending it to the nearest foundry specializing in small work of this nature. After the castings have been returned they are drilled and countersunk for the screw, then filed and polished very smooth to the accurate form and finally buffed to a bright finish. Cast pistol-grip caps can be finished in any shade or color, as described in Chapter XVI. The man with artistic ability can model various caps in figure design out of plaster of paris or clay, have them cast, and then give them any finish desired. This type has become a little out of date, and artistic lines are striven for rather than ornate decoration.

Trap grip caps are made in a number of ways, but the best come from England, used on most of the magnum bolt-action rifles to carry extra sights. The only purpose a trap is used for in a pistol-grip cap is to hold an extra front sight, otherwise it is merely an added novelty. If a rifle is provided with a trap butt plate a trap cap is not a necessity; however, if a stock has only a rubber recoil pad on a plain butt plate, a trap located some place on a rifle to hold the extra sights becomes a necessary utility. The proper location for such a recess is under the pistol-grip cap.

Figure 103 illustrates one of the best trap pistol caps made from a Springfield or Krag butt plate,

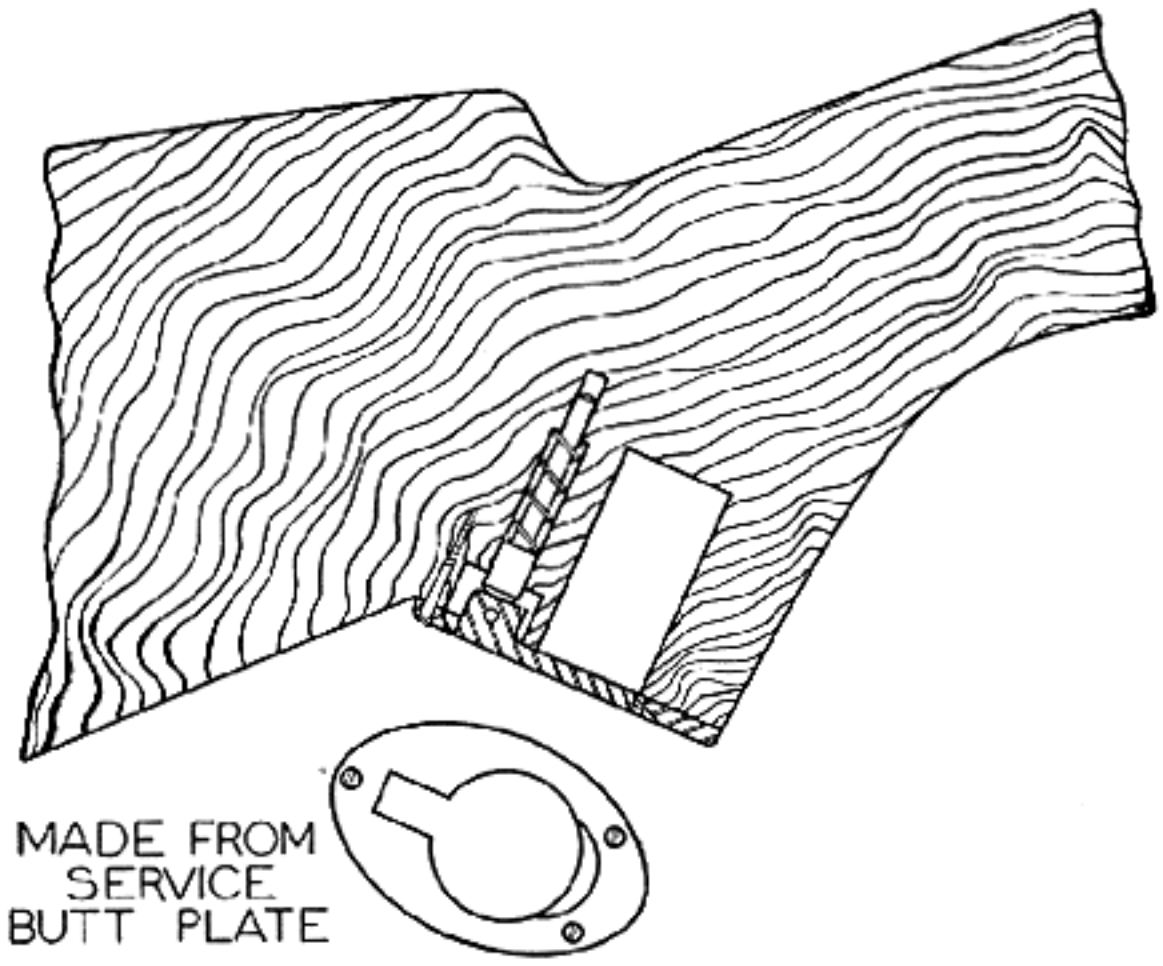

Fig. 103
Trap pistol-grip cap

using the plain plate free of checkering. The checkered plate may also be used, but the plain plates can be engraved or etched after they are mounted. (Refer to Chapter XXII, Volume I.) A templet laid out from the illustration is set over the trap on the plain side of the plate, dividing the distance both for length and width so that the trap will come in the exact center when cut out. Three small screw holes are drilled, one in the front and two in the rear. The two rear screw holes are one on each side of the spring projection. The wood screws used are very small and the heads are allowed to come flush with the top of the plate, the slots pointing north and south. After the plate is in place, a Forstner bit can be run down any depth desired, but the distance should be no greater than the length of the sights that go into this trap.

A good form of trap pistol-grip cap can be made from 1/4-inch cold-drawn steel to the templet using the standard figures given in Figure 101. The center is drilled and tapped to take a 1/2 x 20 special round-head screw with a coin slot. The diameter of the screw head should be 9/16 inch. A counterbore is used to slightly recess down from the surface, and the same counterbore is used to do the same operation for a specially made container. The bottom is drilled and countersunk to take a small wood screw to hold the cap in position and tight on the face end of the pistol grip. The specially made sight well or container is either brazed or soldered to the under side of the cap. The 9/16 hole is bored at right angles to the end of the grip to the desired depth. After the hole is started with the standard auger bit it is finished with a Forstner bit to the depth. The cap screw used to close the end must be made on the lathe; three or four

threads are sufficient to hold it in place. After this is fitted, the section of the bar from which it has been made is still held in the lathe chuck. Two small prick-punch marks are made facing north and south on the side. After removing the cap the screw is cut off to length and the head rounded. The coin slot is sunk in the center with a standard slitting saw on the milling machine.

Pistol-grip caps can be made in such a variety of forms and sizes to suit all kinds and varieties of pistol grips that I have merely scratched the surface of their possibilities; but since I have often referred to this subject before, I feel that I have said about enough. However, I cannot leave it without making some comments on the caps which we see on factory arms and which are moulded from hard rubber. They are cheap, of course, but serve the purpose, the American public being satisfied. The caps which most of the manufacturers place on their arms are of small size; when a larger pistol grip is made it is free of a grip cap and only the natural wood shows. The sizes illustrated are only meant for new stocks and are designed to these sizes so that a full grip can be made with graceful outlines. Suitable caps are made in Germany and can be purchased from there, but with this information before you I know that perfect satisfaction can be had by following these instructions.

Butt Plates — The British rifle and shotgun makers call these heel plates, but the American manufacturers apply the name of butt plate to a plate which is fastened to the end of a butt stock to protect the wood from splitting. Many shotguns made in England, even some of the finest, are void of butt plates. It seems that they are of the opinion that a heel plate spoils the beauty of the stock; sometimes they are right. Here in America, however, many use a shotgun as they would a military arm, letting it slide between their hands to the ground and allowing the butt to absorb the shock, regardless of the rocky nature of the ground. I will allow the reader to draw a picture of a stock without a heel plate in the hands of the average American shooter.

The most suitable butt plates are those made in Germany and England. These we class as the shotgun type of butt plate, made plain and with an elongated trap. To design and make the dies for a butt plate similar to the German type would cost a good deal, and I would advise purchasing these from the usual source of supply.

Figure 82, Volume I, illustrates the various standard forms of butt plates suitable for stocks. At times one can remodel a Springfield butt plate very satisfactorily, but they are rather short to have the outlines of the stock perfect in every respect. One advantage of such a plate is that it is provided with a trap. Of course, the small round trap is not as desirable as the elongted trap which comes on the expensive German plates, but these military plates are very simple to work over and anyone can make such alterations with the most simple equipment. First, remove the trap and cut off the top projection ¼ inch from the face of the plate. Heat the toe and bend it out into a curve which will be just the reverse of the present inward bend. A slight curve can also be formed in this bend and along the sides, but care must be used not to touch the center and thus deform the trap opening. The curve is convex to the outer surface of the plate, which allows it to fit to the shoulder much better than the flat plate. Remove $\frac{1}{16}$ to $\frac{3}{32}$ inch from each side, starting from the top and allowing the line to end before the bottom is reached. The ¼-inch projection is filed to a point similar to the standard plates and a screw hole drilled half-way between the trap opening and the top for a regular wood screw. If it should be a plain plate it can be file-checkered or matted and then case-hardened. Before this is done, however, the plate should be well polished.

Satisfactory butt plates can be cast from bronze or aluminum. This type of plate is perfectly favorable for the use of the target shooter who has definite ideas of what a butt plate should be; aluminum is the ideal material for such purposes, as it is better adapted to a target rifle. Bronze can be cast very thin and after being sand-blasted given any finish desired by referring to Chapter XVI. The first stage is to make a pattern of mahogany or wood of a similar nature. Work out the wood to the proper curves, length, and width, and coarse-checker the outer surface. These patterns are sent to the foundry and cast in bronze, or if it is a special plate for a target arm, it should be cast in aluminum. After the castings are returned from the foundry the edges and under surface are filed smooth and flat. The checkered surface is scratch-brushed on a circular steel-wire wheel, and after the screw holes are drilled and counterbored, the plate is sand-blasted and finished in any color desired. The natural sand-blasted appearance given a coat of lacquer is pleasing and deceives the eye.

Chapter XXV, Volume I, contains information regarding pattern making and the requirements for patterns; from this, any kind of butt plate can be made for any rifle, and one may follow his own fancies as to design and shape. Aluminum castings which come from the foundry can be given a high polish by using different buffing wheels with tripoli compound, etc.

Special steel butt plates can be made from 1/16-inch cold-drawn flat stock. These plates may be made to any width, length or contour, and very artistic designs can be milled on the surface. Chapter XIII, Volume I, explains, and Figure 82 shows, a few designs. After setting-up in the miller and setting the vise at various angles, artistic checkering can be done. The hand checkering of any large surface with a three-square needle file or graver is a very laborious undertaking. The most dependable and accurate method is on the milling machine, using a vertical attachment and an end mill and setting the head on a 45-degree angle. The sharp corners of the cutter will control the checkering made, and the graduations on the dial on either the cross feed or the transverse feed to the table will regulate the number of spaces to the inch. For an example: if twenty lines to the inch are desired (1 inch ÷ 20 = 0.050 inch), the handle is turned each time 0.05 inch on the dial for a new cut. The depth is regulated by the sharpness of the diamonds formed; therefore, two or three lines must be cut first to find where the points come out to a sharp edge. When a border is desired on a plate certain distances from the edge or to form diamonds or other forms around the screw holes, it must be chiseled or hand engraved first, particularly around the edges, and the end mill allowed to terminate at these lines. It is much better to allow the cutter to run off the sides of the plate than to form a border, for there will be a good many run-overs with the cutter which are at times difficult to correct.

The 1/16-inch cold-drawn sheet stock should be perfectly true and flat, and when cutting out the form it should be held flat, so that it is possible to have a true and even surface to mill out the diamonds. After laying out the form and cutting out the plate, a perfectly square block is made a little wider and longer than the plate to clamp in the milling machine vise, and then the plate is sweated to the surface. First, tin one side of the butt plate and also one side of the block. Clamp the plate in position on a center line. The heat which the block contains will form a perfect union on the two turned surfaces. After this is cooled in water, it is ready to be clamped in the milling-machine vise for the checkering operation.

It would be well to clamp a piece of cold-drawn steel in the vise at first and make experimental designs. Since most milling-machine vises are graduated in degrees of angle, various angles can be used to see just where the vise can be placed to give a diamond as nearly perfect as the design will allow. After such trial pieces are made, it will be an easy matter to mill the checkering on the butt plate to the intended design.

After the checkering operation is finished a cast-iron form is made to the proper contour, slightly rounded lengthwise. Make the form a trifle larger than the plate all around, and as cast-iron is easy to file, the form will be shaped very quickly. After this is finished, a female form about one inch thick is moulded from babbit metal. Take a thin piece of sheet iron and form a band around the entire form, allowing it to extend about one inch over the top surface of the form, and clamp this in position. Use clay or asbestos to chink the small opening so that none of the metal can run out. Warm it slightly, place it on a level plate, pour melted babbit in until it comes flush with the form, and allow to cool.

The plate is now ready to be set into shape; an arbor press is employed for this. By placing the female form on the bottom plate of the press and the heel plate in the center of the die, the male form is set on the plate in the center of the ram. Very little pressure is required to bring out the form that was anticipated without injuring the sharp diamonds. Before the plate is passed through this operation it would be well to drill the screw holes; it is much easier to do so at this moment than when the plate is formed.

If a round or elongated trap is wanted in this butt plate, secure a Springfield or a German plate to study its construction and carry out your trap plates to their ideas, which are hard to improve upon. This will be more simple than an explanation which would require detailed drawings. After one of these plates is finished it should be case-hardened in colors, adding not only a rust-proofing agency but a pleasing color as well. (Refer to Chapter XVI.)

The "free rifle" type of butt plate is made of aluminum. A pattern is made to the desired form and shape; it is not necessary to follow any particular design, and is better perhaps to use your own ideas in the development of a plate which you have been anticipating to suit your requirements. When making your pattern remember the limitations of its moulding and that the pattern should be of a shape easy to draw from the sand. The rough casting as it comes from the foundry can be filed smooth or given a sand-blasted finish. Aluminum, as I understand, can be given a blue finish, but at this writing I do not have the information of just how this is done.

Palm Rest — Along with the information given for a free rifle butt plate of aluminum, it is proper to suggest a palm rest for the same rifle; construction is easy. The ball is a regular water-polo ball of solid cork, obtainable in sporting-goods stores.

An extra magazine floor plate should be secured to attach the palm rest, changing floor plates; this enables one to use the rifle with or without palm rest as desired. No special detailed drawing is required to make up this rest. The parts may be made of any metal desired.

Rear-sight Bases — The mounting of leaf sights on military rifles should have special sight bases made in proportion to the leaf sights used. If only a single leaf is used, a band can be made encircling the barrel. If more than one leaf, a base made as Figure 104 illustrates should be employed. This base made in either style imparts a neat and graceful outline to the barrel. When an aperture sight is used, a leaf sight of some nature should be used, as for an emergency sight on a hunting rifle. Merely as a check on the alinement of the aperture sight, it will be decidedly useful if ever the latter is broken or thrown out of alinement.

When a band is used this can be drilled and tapped to hold the forearm in position, but we must discard such ideas whenever possible. They sometimes serve their purpose on particular rifles, but today we look forward to graceful outlines, and these cannot be had with this type of base. The base shown in Figure 104 should be made a standard. These sight bases have been used for years by the British rifle makers, but only of late have we employed them on our sporting military rifles using one or more leaf sights. Colonel Whelen and I expressed the desire for such a base; at that time we had developed bases similar to the British standard, but because of the high cost of applying these to rifles in this country, very few wanted them. Altho the expense is a little high, they are worth all that is asked for them.

The most satisfactory way to construct such a base for a person who only wishes one is illustrated in Figure 104. First, bore out a piece of either 2-inch round or 2 x 2-inch square stock, as Figure 104 shows, to a length which will be in proportion to the leaf sight used. From this blank four bases can be made. Lay out the face of the blank and prick-punch the outlines made for the four bases. Bore the blank to the diameter and taper off the barrel in the desired location. After completing the lathe work, either shape or mill out the side section to the desired width. If placed in a milling machine to do this, use a 1/8 slitting saw or straddle mill to remove these side sections of surplus stock. The milling operations can be brought up to the lines, leaving the file to remove the milling-cutter marks. After the sight bases are cut out, the ends

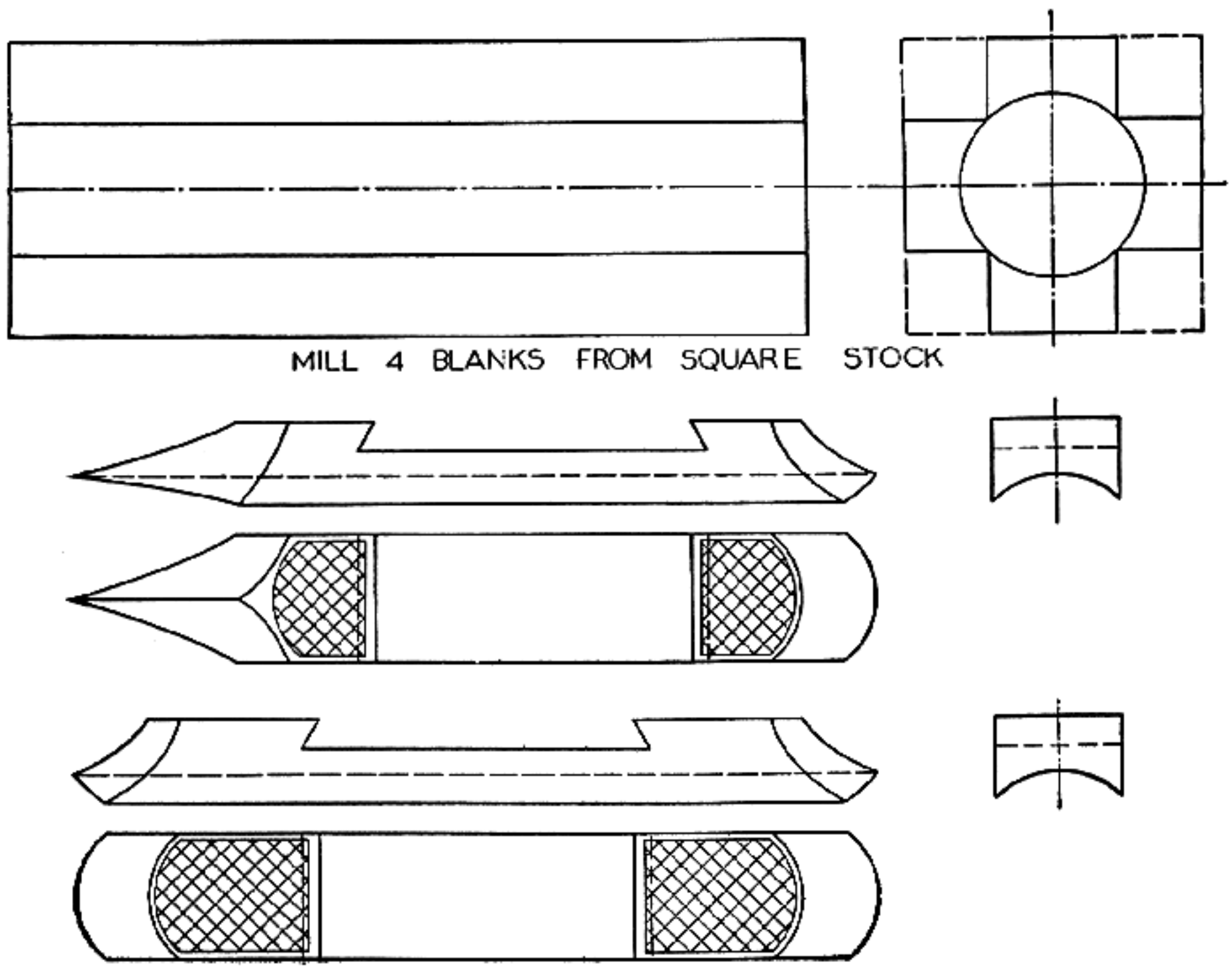

Fig. 104
Leaf-sight bases

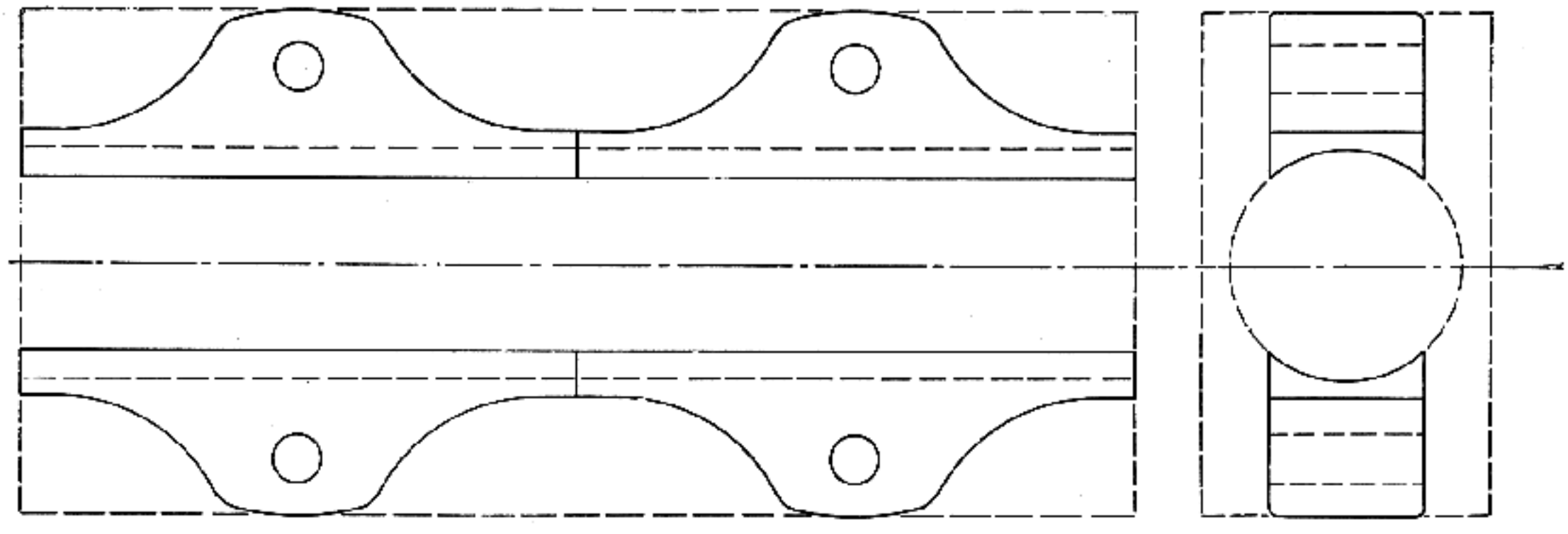

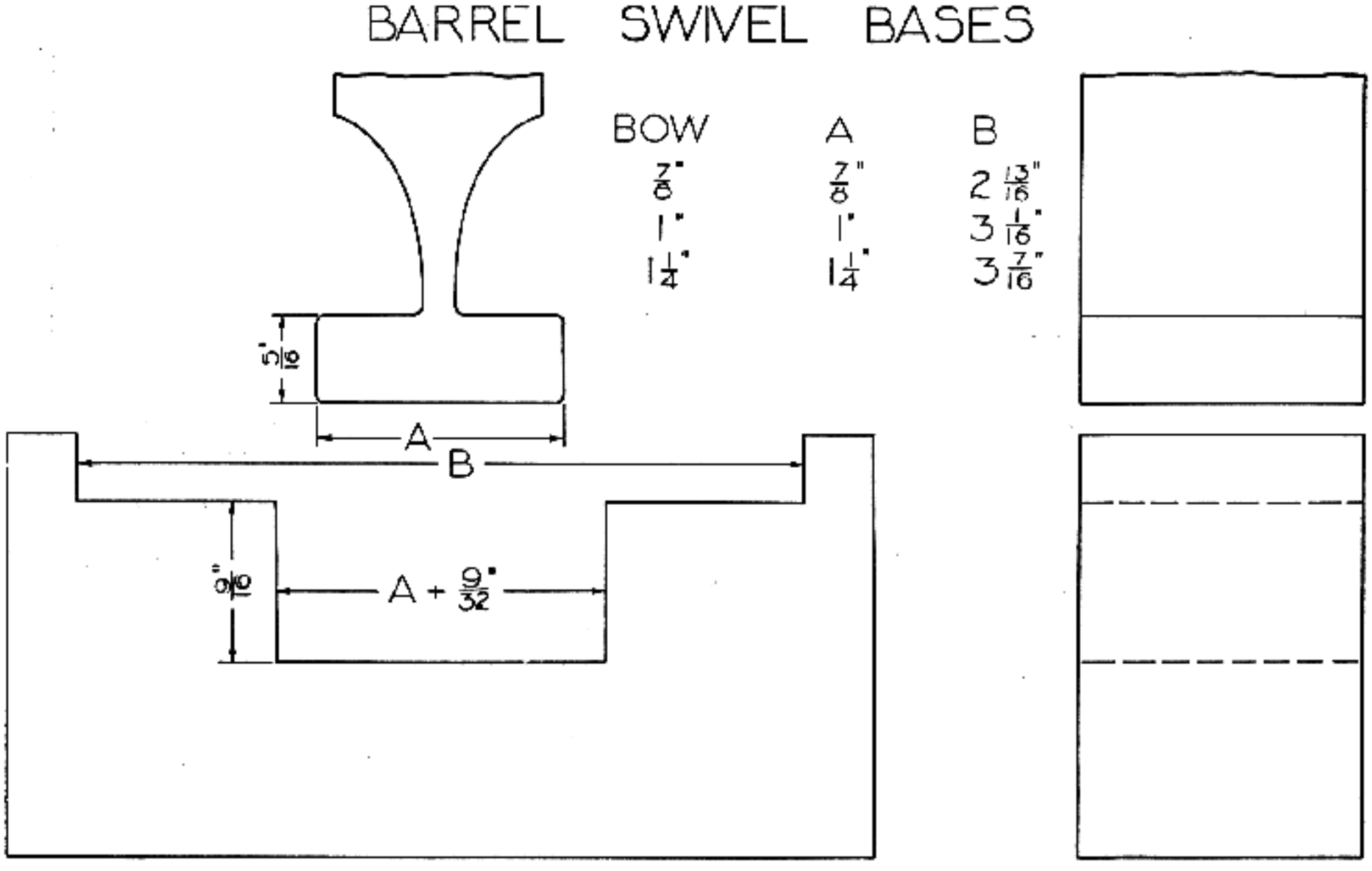

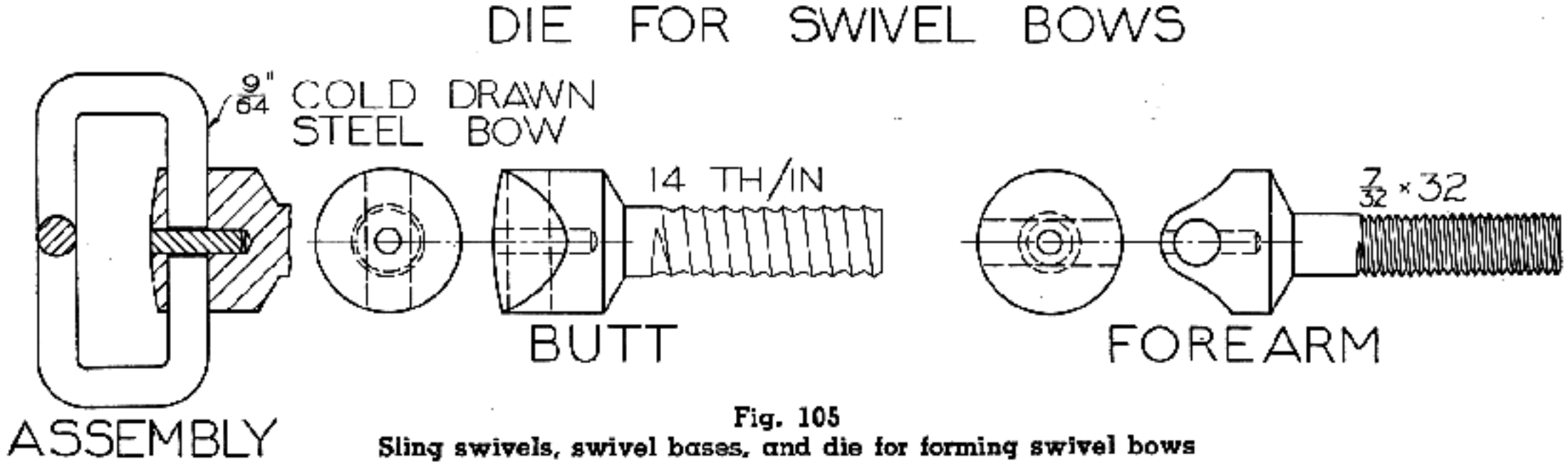

Fig. 105
Sling swivels, swivel bases, and die for forming swivel bows

are milled. The back end of the base is milled out with an end mill of about ¾-inch diameter. After the surplus stock is removed, a slight curvature is filed in this radius which removes the plainness of the straight cut. The top is milled off approximately ⅛ inch over the estimated height of the finished base, and the front end is milled. Study Figure 49, which shows the solid ribs attached to the barrels.

The separate bases can be milled similarly, or an end mill can be used to form the front which was used for the rear, making both ends the same. After the milling operation the base is spotted to the barrel, and the end and sides are polished. Two

screw holes are drilled, one on each end, close to the location of intended dovetailed slot, and counterbored to take a 6 x 48 fillister-head screw. The counterbore should reach close to the bottom and have but a thin web for the head of the screw to pull the base in place. Having thus prepared the base to this point, sweat it to the barrel, and the two screws will pull it down into place. Only three or four threads need be tapped in the barrel to hold the base in position; with such preparation a sweated base held by two screws will never break loose. The surplus solder is removed from the sides of the base and barrel and then polished.

The next stage of the operation is to set the barrel and action at right angles in the milling-machine vise; mill the top of the base to the desired height and also mill the dovetail slot and fit in the leaf-sight base. The milling of the dovetail slot is best performed with a vertical head or in a vertical miller. It can also be done in a shaper, but not as successfully as in the milling machine. The center of the dovetail slot must also be milled to a depth which will clear the working of the springs when the leaves of the sight are moved in position. The width should be $\frac{1}{16}$ inch wider than the springs. You have probably noticed that part of the screw heads have been milled off and that the leaf-sight base covers the screw heads completely as the front sight covers the screw that holds the ramp; therefore, no indication will be visible to mar the appearance of the base. There have been various ways suggested to form rear-sight bases, but if the reader will follow this information and the illustrations, a most satisfactory sight base will be designed.

Barrel Swivel Bases — Bases for the attachment of swivels on a rifle barrel ahead of the forearm are made in different shapes—some are good and others are just passable. Two designs of barrel swivel bases will be described which may be used as standards. Figure 105 (at the top) illustrates one of the best and also the method in which it is produced from a piece of 1 x $1\frac{3}{4}$ inch cold-drawn or machinery steel. A straight hole is drilled and reamed in the center of the blank to the barrel size at the point of location, which is usually 2 inches ahead of the forearm tip. The usual length of these bases is $1\frac{1}{2}$ inches, but since boring and milling are so simple, four can be produced from one blank, as the illustration shows. Before anything is done to the blank, one end is laid out and all cut-out lines prick-punched so that it is possible to cut up to lines with the milling cutter. A $1\frac{1}{4}$-inch end mill may be used for the entire operation. The blank is clamped in the milling machine vise and the surplus stock is removed on the ends and in the center to the desired depth. After one side is finished the blank is reversed and the operation repeated. Next, the sides are milled for width. A sufficient web is left on one side to hold the blank in the vise and mill out the opposite side. With this web holding the bases in place, the one side is milled into the bored hole. The opposite side is cut out with a hack-saw and the sides are finished with the milling cutter by catching the top of the base in the vise. The bases are now separated, drilled, filed to form, fitted to the barrel and sweated into their proper locations. The bases shown in Figure 49 are the most artistic to use in barrel design. They eliminate the use of a band around the barrel; however, many prefer that design of swivel base.

Figures 106 and 107 illustrate a swivel band made from $\frac{7}{8}$ x $1\frac{1}{8}$ x $\frac{5}{8}$ inch cold-drawn or machinery steel. The center lines are laid out together with the width of the base, and prick-punched, making it possible to work to all lines on the lathe and milling machine in order to have the base come in the exact center when finished. Chuck the blank in the lathe and bore to a standard size, 1 inch ahead of where it is desired on the barrel. After being milled, the band is expanded with an expanding mandrel, as shown in Figure 106, together with a base, to the desired location. The milling of this band is done with a $\frac{3}{8}$ or $\frac{7}{16}$ inch end mill, the band being held on an expanding arbor in the dividing head. Figure 106 illustrates the arbor, which is used not only for this operation but for barrel bands as well. It is best to remove some of the surplus stock from the outside of the band so that the milling cutter does not do a lot of unnecessary removing of material. This is rather a slow operation, for it is only possible to remove a small amount of material on each cut. The dividing head is set crosswise on the table, and the end mill used should be a spiral to eliminate undue chatter. The milling of the cylindrical portion of the band is done by revolving the indexing handle by hand the full cut or entire surface of the band, in contact at all times with the cutter. Very light cuts are removed until the thickness of band reaches $\frac{1}{32}$-inch wall thickness.

The projection of the bottom of the base is also milled on the same set-up, except that a convex cutter is used in order to secure the correct form and height. The dividing head is now set lengthwise on the table, and with a $\frac{1}{2}$-inch end mill both sides are milled to obtain the narrow center width shown in the illustration. Instead of having this narrow width come in the center, it can come straight on the back side with a full radius formed at the front. After the milling operations are per-

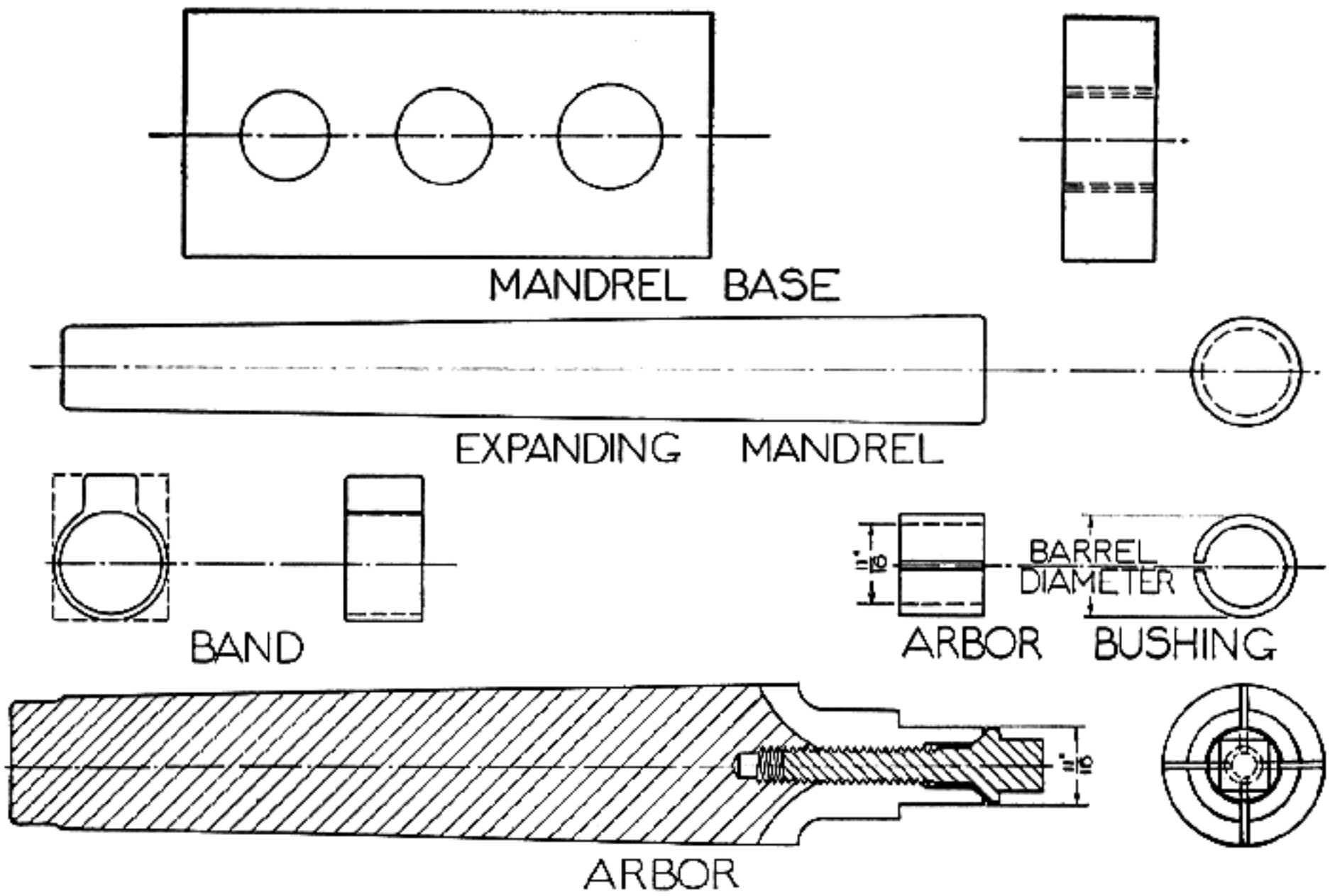

Fig. 106
Barrel-band tools

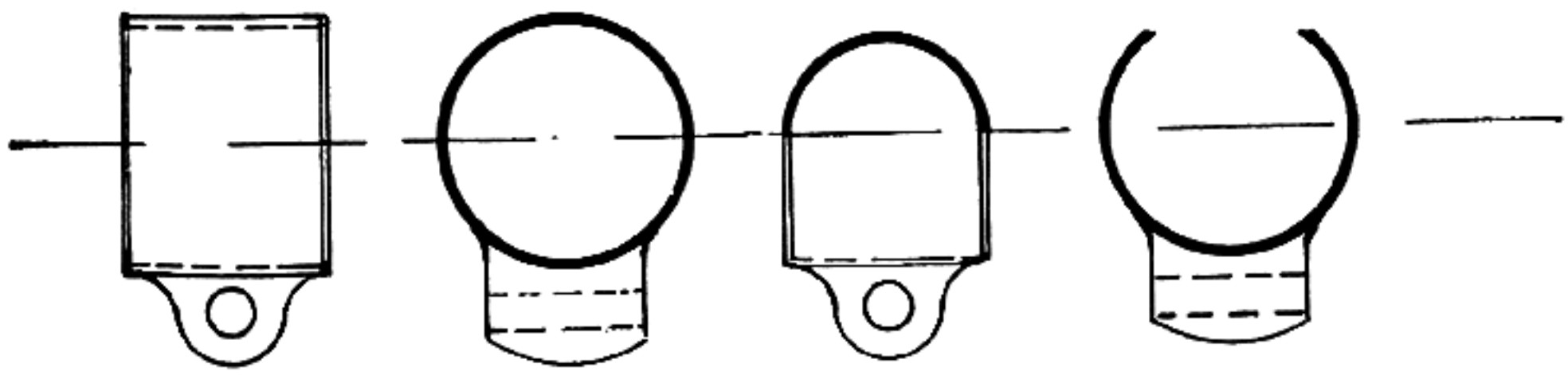

Fig. 107
Barrel bands for quick-release swivels

formed the band is expanded with the arbor to the desired location on the barrel. The hole is drilled, the band filed, giving a high buffed polish, and sweated into place on the barrel.

Barrel Bands — Barrel bands are a necessity on all target arms. A few years ago we had no conception of how essential a barrel was to fine accuracy; the finest barrels were often condemned, but very few ever fathomed what caused the poor results until the discovery of the forearm swivel fastening which was screwed into the barrel itself. Barrel studs are perfectly satisfactory for sporting arms where no pressure is drawn on the barrel in the act of firing, but a target rifle is so different that it is required. The most artistic and best are made from $\frac{7}{8}$ x 1 x $\frac{5}{8}$ inch cold-drawn or machinery steel similar to the barrel swivel bases, except that there is not so much work necessary to form the bottom as on the other.

A barrel band must be bored out straight to a standard size; after being milled the band is stretched or expanded over the size in its proper location. Cold-drawn steel will not stand as much stretching as machinery steel; therefore, the latter is the most desirable of the two steels for this purpose. Figure 106 illustrates the manner in which a barrel band is started and finished. There is such a vast difference in diameters of rifle barrels that the dividing-head expanding arbor shown in Figure 106 should be made to a standard size, such as $\frac{11}{16}$ or $\frac{5}{8}$ inch, and then bushings, which are split, also made as illustrated; these are made in different sizes as needed to fit the odd-sized bands, and the diameter on the end of the mandrel is made to a standard. A number of these bushings could be drilled and reamed to the diameter of the mandrel; then whenever they were needed they could be pressed on an arbor, turned to the bore diameter of the band, and split with a hack-saw. A little pow-

dered rosin dusted on the cylindrical surface of both the inside and outside of the bushing will hold the band in place better in the milling operation.

The diameter of the end mill usually used for this operation is a 5/8-inch spiral cut. The setting of the dividing head is done in the same manner as for the swivel band, and the same instructions are followed. After the milling operation is finished, the swivel hole is drilled and tapped. Three different sizes may be used for this: 3/16, 7/16, or 1/4 inch. The 7/32 x 26 inch or 32 thread is the best standard to use if you are making your own swivels. The band is expanded and fitted to the barrel, but since there is such a difference in barrel diameters, various-sized expanding arbors can be made with just a trifle more taper than on a barrel. Bottom steel blocks are drilled so that when a band is set over one of these holes it will have the full support of the cylindrical diameter. If a hole is too large and the band is caught on the base and top portion of the circle, it is stretched out of shape. It is well to remember that even machinery steel will stand just so much expansion and no more. The expanding operation is usually performed on an arbor press, the bottom base resting between or over one of the cut-out slots on the arbor-press base plate.

Shelby tubing has been suggested for barrel bands, but since so much material has to be removed by machine, it does not pay to use it. The inside of any solid band must be bored and if time is saved on the lathe operation it is lost in the other two operations; besides, this material will not stand very much expansion; therefore, select the square machinery steel for barrel bands made in this manner.

A simple method of making a barrel band, if the shop is not equipped with a milling machine or any other machine tools except a drill press, is to form a band from a piece of sheet steel, as illustrated in Figure 108, which shows a band made in two pieces, it being attached to a base block with two small rivets. The method of forming the band is clearly illustrated in Figure 108. A piece of square steel, of the same width as the proposed base of the band, is wired or taped to a mandrel. It should be the exact diameter of the barrel in the location where the finished band will be placed as shown in the cut; a U-bend is made in the sheet steel, and the piece then "straddled" over the mandrel and the vise set up tight.

The base is made from a piece of 5/16 x 3/8 inch square cold-drawn steel. Two holes are drilled through the band and base. The rivets are cut off so they will project over each in the side, allowing enough to rivet over, completely filling the chamfered drilled holes, forming a perfect union between

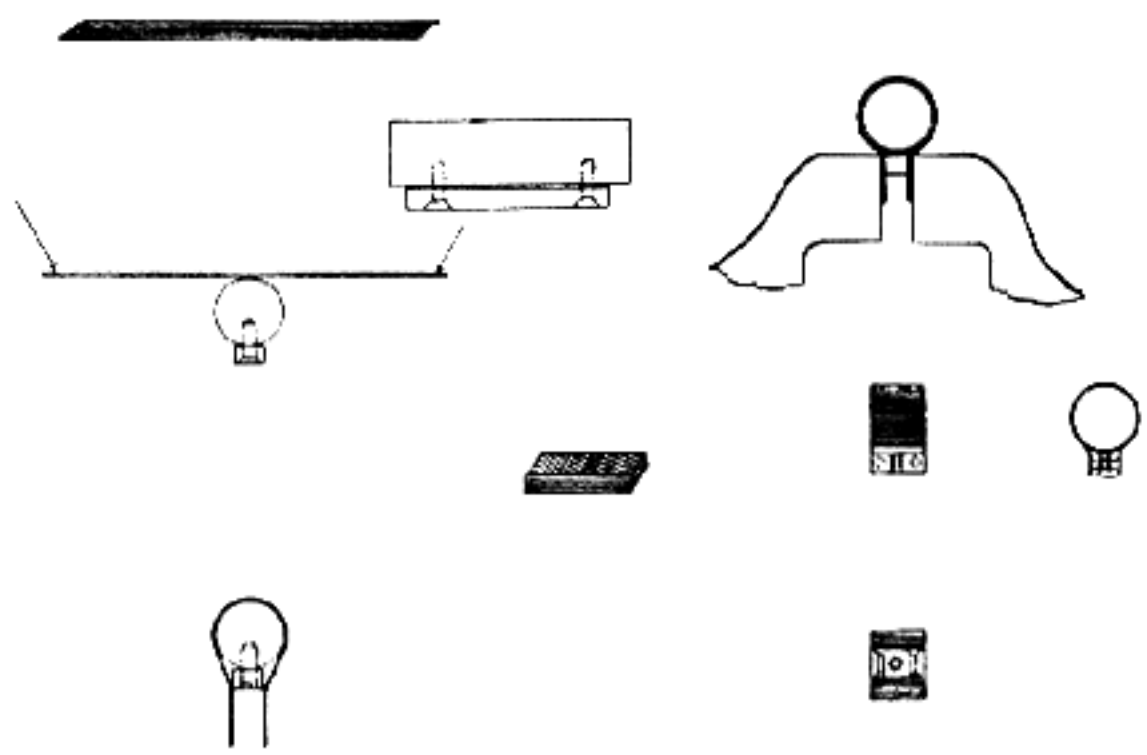

Fig. 108
Method of making a simple barrel band for any sporting rifle

band and block. The use of rivets enables the band to be drawn very tight to the base. Screws can also be used for this operation; they make a very solid band. The band is made from 0.025 inch to 0.030 by 5/8 inch sheet spring steel, annealed, and it should be fitted to a barrel about 1/4 inch ahead of its intended location; then hammered or peened on the mandrel to a perfect fit after being assembled. After all operations are completed, it is filed, polished, buffed, and blued, before being placed on the barrel. This type of band answers in a number of places, but whenever machinery is available, a one-piece band is always much more favorable in appearance.

A variation in the use of this band is with either the Springfield or Winchester swivel bases, as illustrated in Figure 108. The base block is made longer and is attached to the barrel band and the swivel; the latter is attached to the base block with two screws that are drilled and tapped in each end. If desired, the swivel band may be removed from the base and detachable swivels used. Such an arrangement is really better for target rifles than the single screw, as the latter often loosens and turns sideways from the pull of the sling; this base is always in line.

Swivel Screws and Bows — The first stage of making the common sling swivels is to construct the swivel screws for the front and rear. The latter is made on the principle of a wood screw while the former is a standard machine screw; therefore, one is made to screw into wood and the other to screw into a tapped hole in a piece of metal such as a barrel band or barrel. Study the construction of swivel screws for the quick-detachable swivels illustrated in Figure 105; they are made in the same manner, except that the heads are made 17/32 inch in diameter and the holes are drilled with

a No. 25 drill. The quick-detachable swivels are made by the Winchester Repeating Arms Company and a firm in Germany, but only in 7/8-inch widths, the standard for a carrying sling used for a sporting rifle. All such rifles should be equipped with this swivel, for many times a sportsman does not wish a sling attached and these are very simple to unsnap instantly.

The making of swivel screws in either type can be done on a lathe, but if many are needed, it becomes a production operation and is best performed on screw machines. Before beginning the operation of the butt swivel screw, the correct form must be considered for wood. Figure 105 shows the butt swivel and form of thread best adapted for wood; the screw is constructed very differently from any other form of screw used in wood work. (Study Chapter II, Volume I, for the desired information.) The usual leed of this screw is 14 per inch, but coarser threads are recommended. This form of thread is rounded in the bottom with the top left sharp; therefore, the tool used to cut it is made 0.070 inch wide with a 0.035-inch radius on the end. This thread cuts its form into the wood and gives it considerable support in the threads; whereas, the other form of screw breaks or crumbles the wood to such an extent that it often pulls out if much pressure is used.

The forearm swivel screw is the United States standard form of thread; a standard die is used to cut it. The forming of the head of the screw is done in a milling machine with a form cutter, which is the best method when a large number are to be made. When only a few are required they can be filed by hand or the head left round, which has a pleasing appearance; however, the formed head is usually preferred. When drilling the hole for the swivel bow it should be done in a drill jig in order to have the hole come in the center of the form. If only a few are made the hole is drilled first and the form filed to the center of the drilled hole. A 3/32-inch hole is also drilled into the end to one-half its depth to keep the swivel bow from working out. The end of the hole is slightly countersunk to give the small pin more support when it is riveted over.

The making of swivel bows for the screws is very simple after the die, shown in Figure 105, is completed. The size of rod ordinarily selected for a bow is either 1/8 or 9/64 inch. The correct length of rod is cut and laid between the solid gauges in the die, and the punch is brought down, pressing the rod in the die form; when it reaches the bottom the two ends are bent into the center web of the punch. This operation can best be done in an arbor press with the punch fastened to the ram and the die fastened to the plate. In the absence of an arbor press a steel block is made the same size as the bottom of the punch and used in the bench vise.

If a large number are to be produced a cam die should be designed and constructed; however, quite a few can be made on an arbor press in a day's time. After the bows are formed in the die, one end is bent out just far enough to clear the head of the screw as it is assembled. The straight end is first inserted in the drilled hole and then the bent end is straightened in perfect alinement with the hole and the swivel screws set in the center of the bow. The 3/32-inch pin is driven into place and riveted over. The end is polished, and if it is well done the least sign of a pin is absent. After this operation the entire swivel may be blued by the niter process given in Chapter XVI or the case-hardening method contained in the same chapter.

There are many methods of making sling swivels; altho the best have been described, sometimes a standard base or swivel band must answer for a quick job, or a substitute found. The Springfield or Krag offer a number of ways by using the bands and swivel bases. If a quick-detachable base is required, the use of the butt swivel base will answer the purpose very well. Cut the swivel bow in two and pull the pieces out of the base. Enlarge the hole with a No. 25 drill. When the drill strikes the center pin in the base, be very careful to see that it does not catch the drill and break it.

These bases are of the proper width for quick-detachable swivels and this type of base also answers for the forearm swivel. If the base of this type is to be used for the forearm swivel, the barrel band should be of the wider type so that the fillister-head machine screws would go through the forearm and into the barrel-band base. On a target rifle with heavy beaver-tail forearm it is advisable to eliminate the band entirely, the swivel base being entirely attached with wood screws.

In remodeling a military, obsolete, or standard factory arm, it is often desired to use the old outside barrel band because it fits the barrel and the stock so perfectly. The forward swivel screw can be cut off and threaded to the shoulder which has been previously described, and after drilling and tapping the bottom of the band, the swivel should be screwed in very tightly with the swivel bow standing crosswise when the band is in place. The inside of the hole should be slightly countersunk and the small projection end of the screw riveted over. To do this, stand the head of the swivel and band on a block of lead to prevent its being marred, and use a small-ended drift punch for the riveting operation. The end, after being peened over, should be filed flush with the inside of the band.

Barrel Collars — When top hand guards are fitted to remodeled military rifles a collar must be made next to the receiver to hold the hand guard in place. Figure 109 illustrates two collars used for this purpose. The forward barrel band is prepared to hold the guard in its forward position. This is only done when making a full-length stock of the Mannlicher type with a top hand guard. There is very little call for hand guards, but it is well to know the methods used for them. These collars need not fit the barrel tightly, but should be made so that they just slip over without undue play. The tenon of the hand guard wedges itself into the recess of the collar and holds it firmly in place. Collars should be turned very thin, and where the tenon of the guard fits, should only remain a thin shell. The forward band is the standard Springfield lower band; a piece of sheet steel is fitted carefully in the upper part of the band and brazed from the inside. The piece is then filed to fit over the barrel with just a neat clearance. Preparations such as these make a more satisfactory appearance than allowing the wood to show.

In remodeling the Krag or any other military rifle which has much drop between the receiver and barrel, it is often desirable to use a plain band, as illustrated in Figure 109, over the barrel placed next to the receiver. Any of these may be made to rather a tight fit and then blued. To set the band in place, heat it just enough to expand the metal, slip it in place over the barrel and allow to cool. It is not necessary to heat it to a cherry-red; if the correct amount of metal has been left for this operation, which should be about 0.002 inch smaller than the barrel, moderate heat will expand it sufficiently to slip it into place. Naturally, a tight

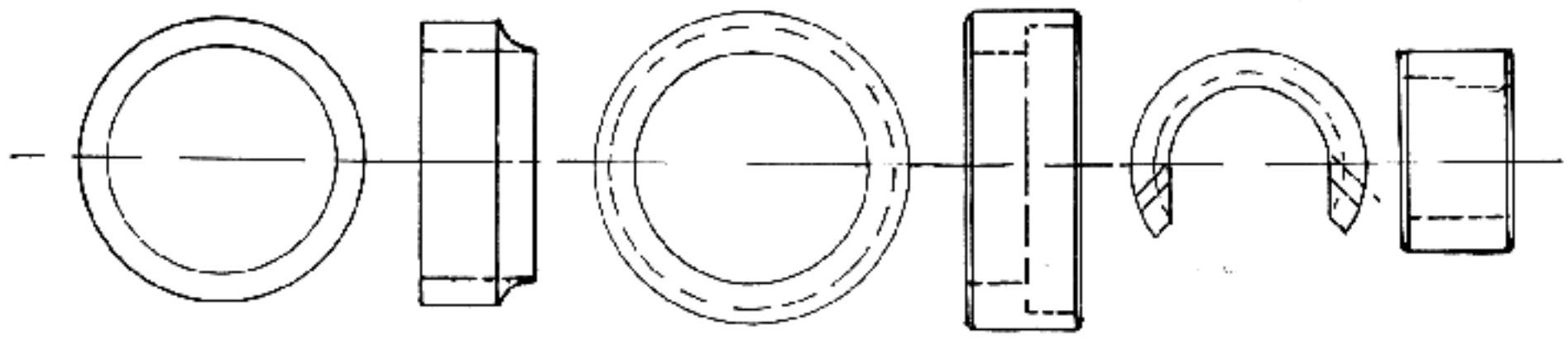

Fig. 109
Barrel collars used in front of receiver and to hold wooden guards in position

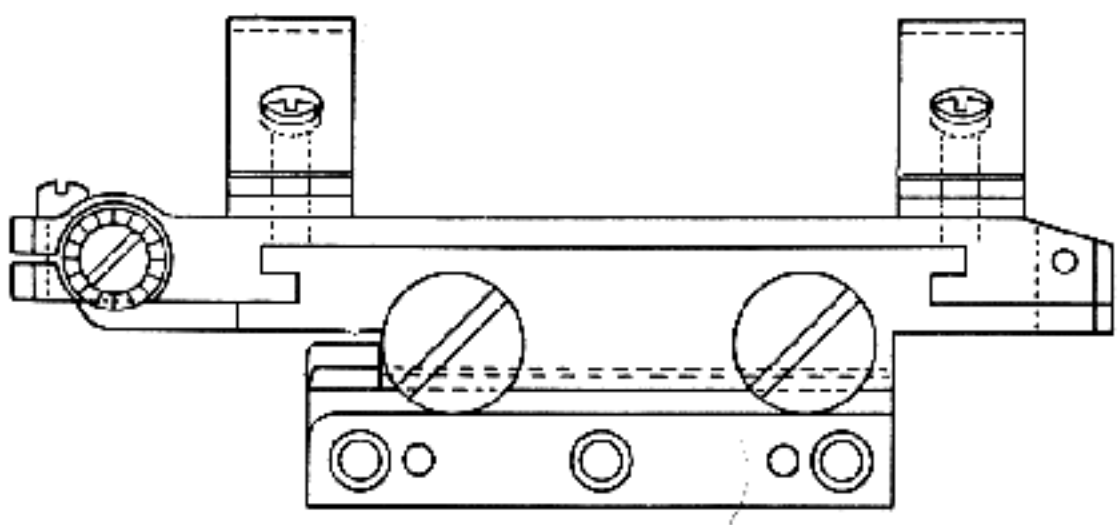

LEFT SIDE ELEVATION

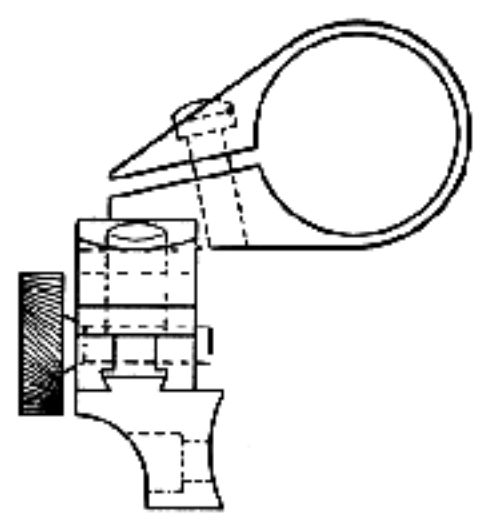

REAR VIEW

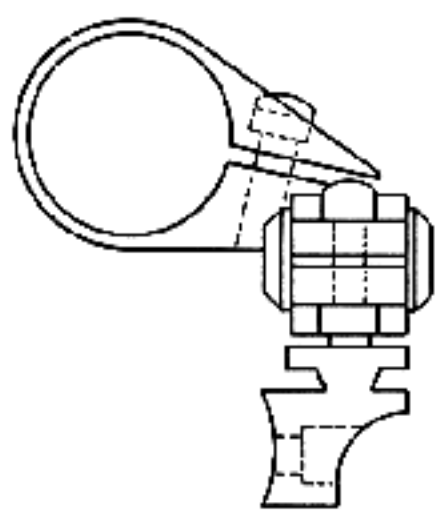

FRONT VIEW

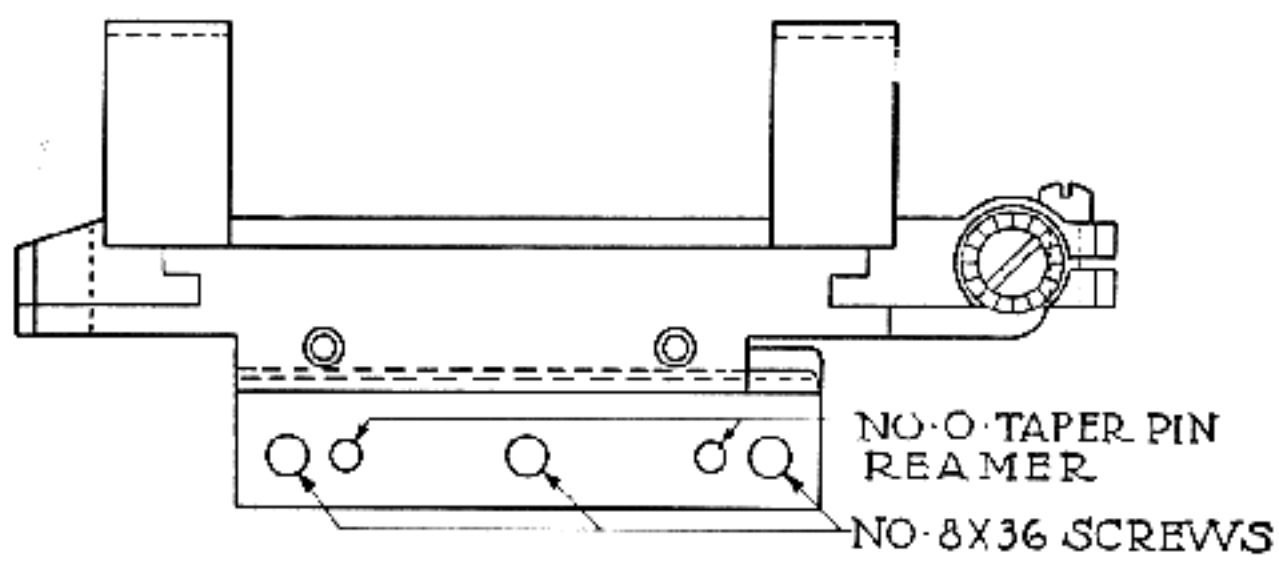

RIGHT SIDE ELEVATION

Fig. 110
Niedner sporting telescope mount

band is the most desirable, but if it is a little loose on the barrel it can be closely inletted when it is being fitted into the stock and then it cannot move from its position.

Telescope Mounts — Since these are rather difficult to make, it is much better to procure them from the manufacturer, unless you have ideas of your own which are better in all points of construction. The simple mounts which we are all familiar with need no explanation such as those on the Lyman and Fecker target telescopes. There is room for improvement on all these mounts and bases, particularly in the methods of fastening, but that is aside from what we are concerned with at present.

Telescope mounts for sporting rifles have not undergone very great improvement. The German idea of fastening a telescope is very good indeed except for the windage adjustment, but now that it is possible to make adjustments in the telescope itself for windage, a better development of mounts on the German principle will be an accepted advantage over some of the poor mounts before us today.

Figure 110 illustrates one of the best mounts made in the United States from all angles of mechanical construction, even to the artistic outlines which are so gracefully blended with the lines of the rifle and telescope. I am rather opposed to a telescope on a hunting rifle where it is used on long hard trips, but in the territory adjacent to one's home a telescope is an ideal sight. There are quite a number of sportsmen who, because of defective vision, must turn to a telescope even on a long hunting trip; they must nurse their instruments, not only protecting them from bad falls, but developing the necessary skill to keep them in adjustment even when the odds are against using them.

The mounts illustrated are very positive and will never get out of order because of wear. The two locking screws are made large with the coin slot; the mount is split in the center of the dovetailed slot with a small slitting saw, and as it is slid over the male dovetail on the base and the two screws tightened, it makes a solid union which can never become loose when once locked tight. The windage adjustment consists of two coin-slotted screws bearing against a center projection which cannot be seen because the mount has a rear swivel pin and closely fitted rotary square T-bearings. The one-screw telescope clamping band is an added feature, but some do not care for this as it is necessary to strip the telescope to place it in the mount. This is a poor excuse, however, for whenever it is possible to eliminate any unsightly projection or unnecessary screws it should be done—it is good engineering practise.

The mount is instantly detached by loosening the two screws and sliding the mount off the dovetail base, and since the base on the receiver is small it is not objectionable. As can be seen from the illustration, the telescope is mounted directly over the center of the receiver. Figure 111 illustrates a mount of this description. In the construction of a telescope mount, all these features should be taken into consideration to make the mountings a success. Those who are determined to design and construct their own mountings for telescopes should consult all makes of mounts and telescopes and avoid those which are just mediocre. Try to surpass all other designs and produce a mount which will stand the heaviest of recoils—a resistance not possible with some mounts now on the market.

Telescope Blocks — Figure 112 illustrates three different blocks; the standard factory block, offset mounts, and a special mount which can be used for different centers such as 6, 7.2, and 8.2 inches. Such a solid block is perfectly satisfactory on a target rifle for those who wish a long base to obtain the various distances, or to vary the eye relief.

The construction of telescope bases is performed on a milling machine. After the blanks are milled to the desired width and height the radius is milled

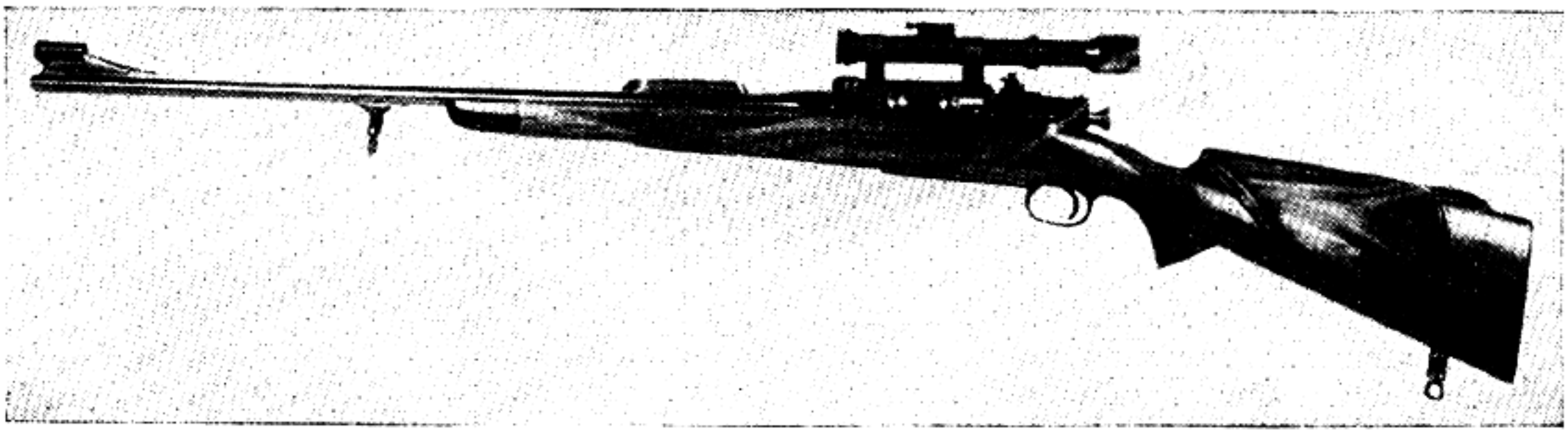

Fig. 111
Remodeled Springfield Model 1903 designed for Mr. Earl Benninghoff. Full sighting equipment

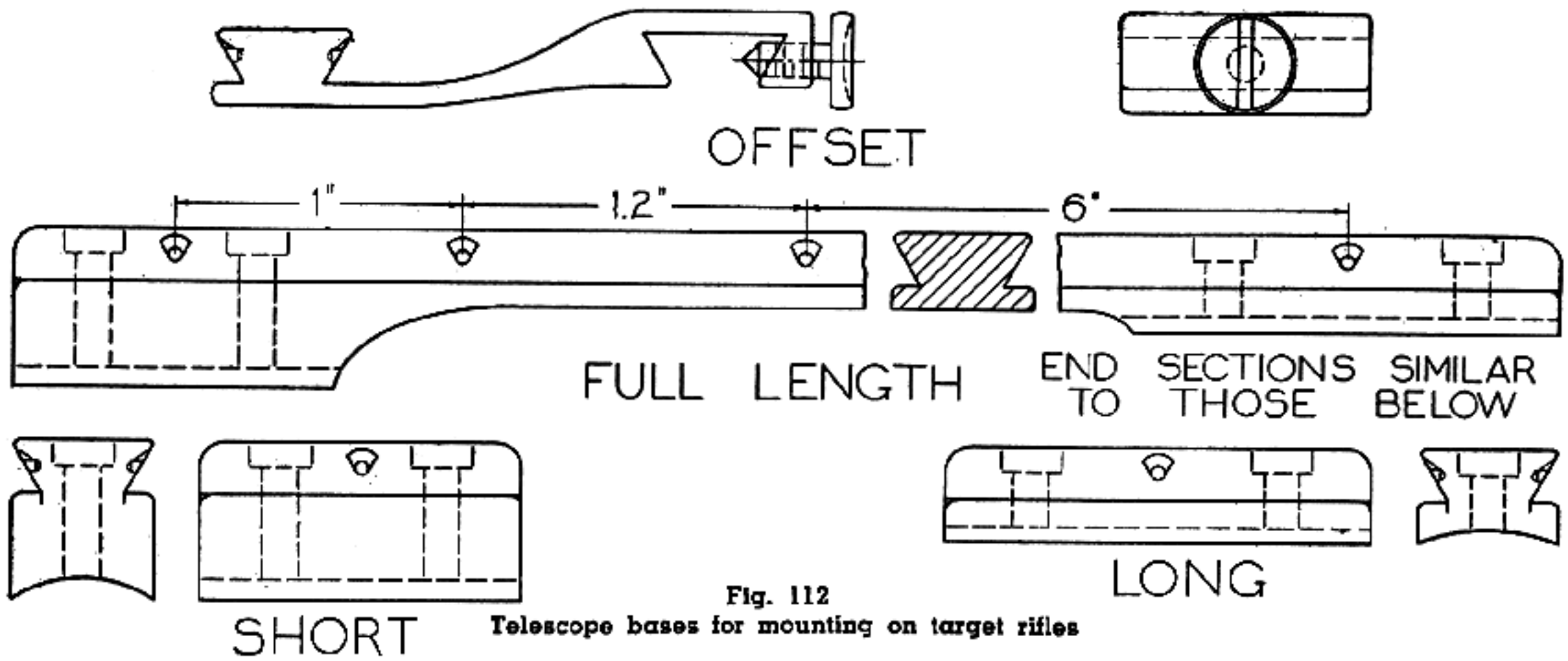

Fig. 112
Telescope bases for mounting on target rifles

as near to the barrel as possible. The next stage of the operation is to mill the angles on the sides so that the mount can just slip into the dovetail slot. Instead of milling one of these at a time, a 6-inch blank is milled, the first operation being to mill the male dovetail slots the full length. This may be done in two ways, with a vertical attachment or with angle cutters on the arbor. By this method, however, it is necessary to remove the blank from the vise and reverse it; whereas with the vertical head it is not necessary to remove the blank from the vise at all. When constructing the full-length base it is much better to use the vertical head so that it is possible to keep the angular slot the same width the full length of the blank. The long blank to be used for the individual bases should be cut to the desired length and the radius cut separately on each block and also cut on a slight taper the same as the barrel. A small piece of paper is usually placed under one end as it is clamped in the vise, except where very sharp tapers are encountered. End mills are usually employed to mill the radius on the under side of the blocks by clamping the blanks to the edge of the vise; the end mill is fed lengthwise to the cutter by the cross feed. The separate blocks should be exactly the same height; therefore, the rear block is milled first, the front block machine to correspond to the latter. A straight-edge is laid over the top of the rear base, and by measuring down to the barrel at the point where the base is located, this distance will be given.

The illustration of the full-length telescope mounts is very simple. The reader can construct one of these by the explanation given for individual bases, but he must remember that an oil-hardened steel is best to use in their construction.

The offset bases are milled from a solid blank of cold-drawn steel; both bases are made in one piece and then separated after machining operations are completed. The distance between the male and female blocks is governed by the individual requirements, but the usual distance is ¾ inch.

It is best to make telescope blocks such as those illustrated a little longer than the factory product. Provisions are made for well-rounded ends which are filed after all machine operations are completed. The width is also left a little wider so that a good support is had upon the barrel or receiver; the bases below the dovetailed portion should be given a slightly rounded surface. Filing demonstrates the forethought used to make a block look as tho it were not a factory product. The holes are drilled in the exact center; the distance is given on the telescope block drill jig illustrated in Chapter XVII, Volume I. Standard fine-threaded fillister-head screws are used; therefore, the counterbored and drilled clearance hole should just fit the screws. The standard screws for mounting telescope blocks are 6 x 48 with rather large heads.

The offset bases and the short blocks are usually case-hardened. (Refer to Chapter XVI.) The cyanid bath is employed for this. The full-length base is made from an oil-hardened steel and holds its shape in the hardening and tempering operations. The block is given the usual heat and hardened in oil, and the temper drawn in a nitrate bath is set at 650 degrees Fahrenheit, which produces a perfect temper and a perfect blue.

The mounting of the bases on a rifle should be done with the drill jig, illustrated in Chapter XVII, Volume I—one of the most reliable methods for all types of rifles. The mounting of telescope blocks to rifles that can be set upon parallels on the under surface of a receiver is easy, but when it comes to cheaper arms without a flat under surface or a side which can be squared, it often happens that blocks placed thereon are on one side after the

arm is assembled. With the drill jig, however, perfect alinement can be had with the rifle assembled in the stock and the jig clamped in place. For this reason, such a jig should be employed if a number of telescope blocks are to be mounted on rifles in the course of time.

Shields and Ovals — The construction of shields or ovals calls for a blanking and forming die; the metal used is gold or silver. With gold, nine carat is the usual hardness required, as pure gold is too soft. Their principal purpose is for a monogram, and they should be artistically formed. Figure 95 illustrates a number of these in Chapter XIII, Volume I; choose the one which appeals to you most.

Shields or ovals may be filed out by hand when only a few are required. A templet is made first and laid out very accurately upon a piece of sheet brass. If the form is pleasing, lay it on a 1/32-inch sheet of gold or silver, cut it out and form it to the contour of the stock in the desired location, which is usually on the under side of the butt stock between the pistol-grip cap and toe of the butt plate. After it is formed, two copper tacks are soldered to the under surface close to the top and bottom ends.

When you have cut out a templet which is exceptionally pleasing in design, it would pay to make a blanking and forming die to reproduce it for your own use, thus perhaps creating a demand for this attractive monogram plate.

Gun Slings — We shall be obliged to vary our work from metal to leather for the leather sling. The military gun sling Model 1907 is one of the best to use on a target rifle, and all gun slings should be remodeled from this type of sling. There are a number of different makes on the market; some are very good and others are made of poor leather. If it is not possible to combine all the principles of the government sling in various widths, a sling of simple construction, the Whelen sling, can be made. This sling consists of one piece of 7/8 latago leather, 60 to 72 inches in length. Two holes are punched opposite each other along its entire length, 1 3/4 to 2 inches apart. It is laced together with leather thongs, or with hooks made as Figure 113 shows, one at the bottom and one at

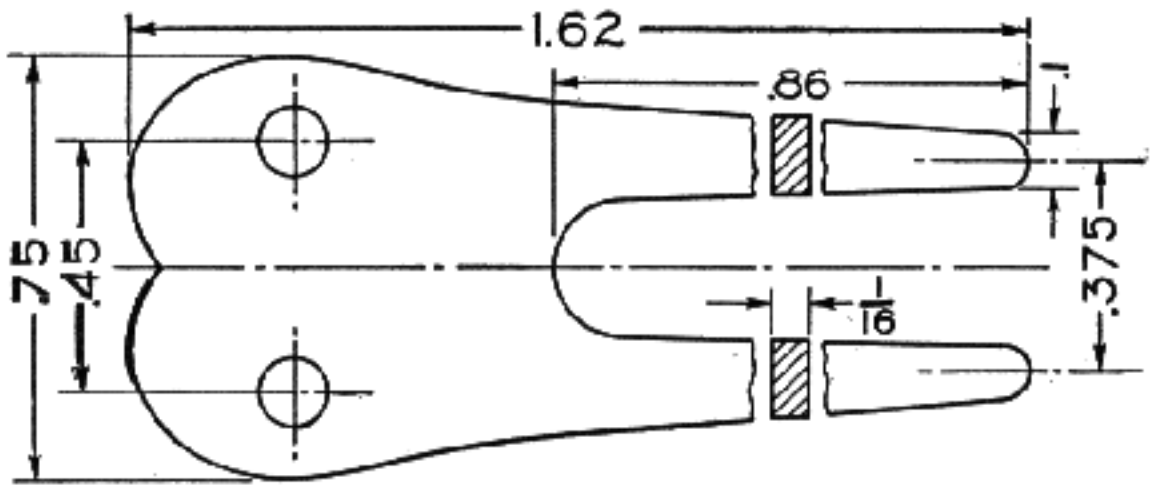

Fig. 113
Die-stamping of a Whelen gun-sling hook

the top. It is used for carrying purposes, but can also be used to steady the hold for offhand shooting. Slings are very reasonable and it hardly pays to make them unless one wishes something different and is willing to spend time making them.

There are probably a great number of simple parts which I have failed to mention in this chapter, but the general outline of special parts will enable you to make others. I have omitted sights of special construction, carrying cases, loading tools, etc., because special chapters are devoted to some of these subjects. At times the construction of special parts taxes the ingenuity of the mechanically inclined person as well as the amateur; but after all, each one turns out something which is just a little different and creates greater possibilities for something better than we have had.

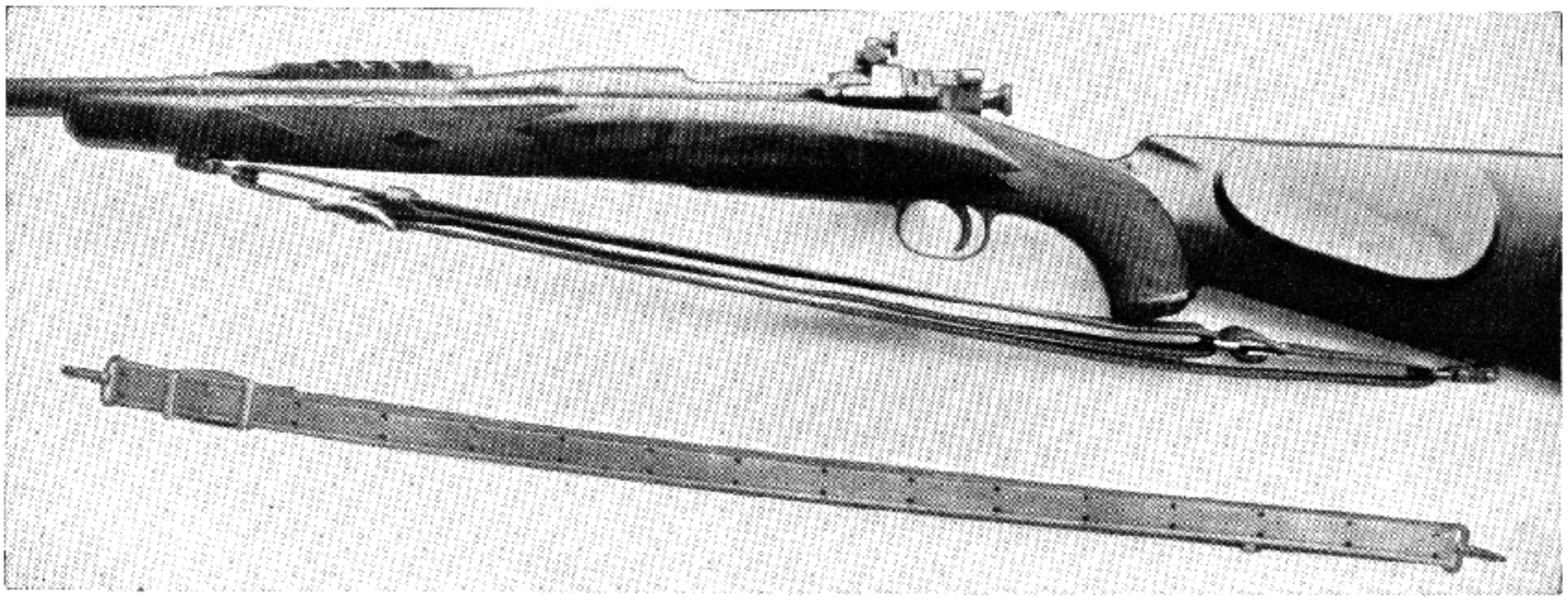

Fig. 114
The Carney gun sling. The sling that meets the needs of the target shooter or hunter

CHAPTER XX

Manufacture of Gun Sights

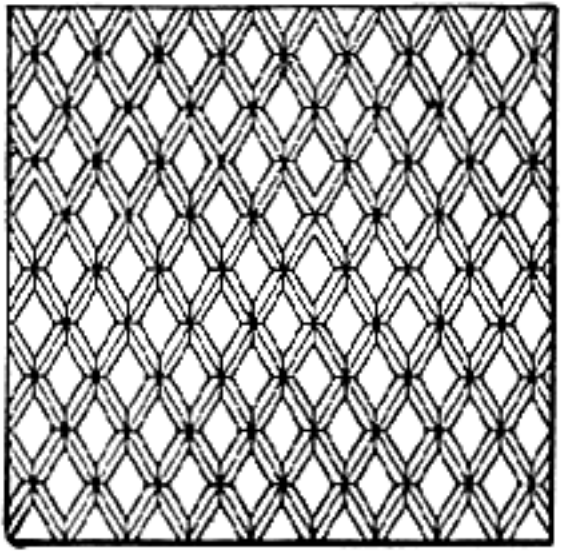

CHAPTER XX

Manufacture of Gun Sights

THE designing and constructing of new sights requires a considerable amount of tool and die making practise, as well as a knowledge of the principles of optical engineering. When all these interpretations of designs are understood, the study of ballistics is essential, and the understanding of various other controlling factors. Many ingenious, mechanically trained men do not have the courage to construct sights without anticipating some mercenary returns for their efforts, and the only way this can be accomplished, when one has something better than the standard factory sight, is to build these in his own shop. However, when one must compete with large and well-established businesses in such lines, one must have capital as well as a large variety of salable items.

Putting aside the values in dollars and cents, design sights for your own particular needs and ideas; they may not be new, but you can find endless pleasure in realizing your ideas, providing you have the necessary tool equipment. After you have looked through a number of catalogs of sights, you will see such an endless variety, from simple open sights to the most complex aperture forms, that you may become discouraged. You may think there is no room for improvement. Never hold such thoughts. They are like an old book I once picked up, written by a noted London surgeon in the year 1802; in it he described the various instruments used in his profession at that time, saying: "There can be no further improvement in the instruments shown." (They appeared to represent butchers' knives and saws.) If only it were possible for him to return to earth today and see what has been attained in the medical profession alone, he would be amazed.

The same carries true today, for many think there can never be further improvement on what we have. Eliminate such thoughts from your mind and look upon all that is before us as mere toys, for the evolution of mechanical development is so great that it is impossible to foretell the future.

In designing the various types of sights it is desirable to bear in mind one of the properties of the human eye, since it is only by so doing that the principles underlying the various types of sights can be fully appreciated. The human eye, like the photographic camera which is exactly similar in principle, is unable to focus simultaneously on objects at different distances from it. From this it follows that in alining two or more objects, such as the open sights about to be described, only one of them can, at any given moment, appear perfectly defined. In tracing the design of rifle sights from the simpler to the more complicated, it will be found, however, that the attention of inventors has been directed first to bringing all objects which have to be seen into as nearly as possible the same focus, and second, to magnifying the image or object so as to make it more readily visible and increase accuracy of aim, whether at the target or in the hunting field.

The only way the active, mechanically trained person can aid the development of sights is to use the present manufactured designs, discover the lacking principles and faulty construction, and then improve upon these deficiencies.

During my years as a maker of special sights I have learned that various persons require a considerable degree of exactitude in order to acquire accuracy in their aiming, while others can take any sight, whether open or aperture, and obtain good results. Yet there is always a certain amount of error that they cannot understand, especially in the use of open sights. We often hear of ridiculous designs, but from just such things a new idea is born which may supersede all expectations.

Look at the long-range target shooter; there has been no improvement in the standard aperture sight for him. The elevation and windage adjustments are not satisfactory by any means. There should be designed a means for quickly figured estimation of windage for any velocity rather than for figuring out the number of clicks on a knurled nut. A special quadrant could be designed which is positive for either right or left windage, and so marked for any given distance and for any wind which may be blowing from five to forty miles an hour. This could be graduated on the quadrant, which is quick and positive, without the shooter figuring this all out on the firing line. This is only a suggestion, but it has to do with an improvement that is badly needed.

Sights should be constructed for the different

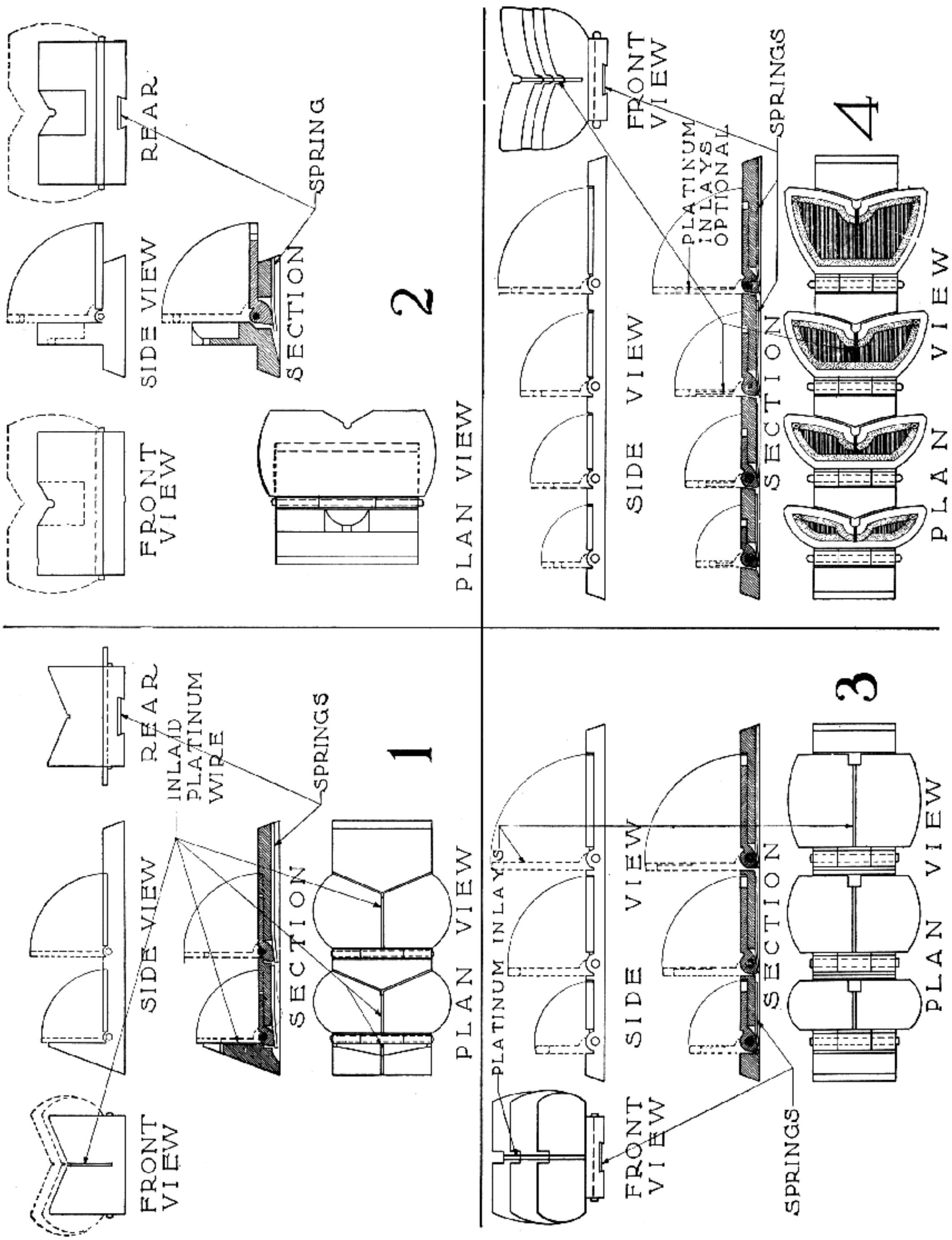

Fig. 115
Leaf-sight designs. Notched leaves are preferred by most hunters

purposes intended for a hunting arm. They should be made simple with as rigid a design as possible within keeping of the design of the rifle. For target work they can be rigid, but with many complications to suit various conditions found on the rifle range. It will be necessary for a great many sportsmen, knowing the special designs they may wish, even tho they are mechanically trained to select the standard factory sights. In our first part we shall select the open sights for construction, but it will be found necessary to refer to Chapter XVII, Volume I, for certain connective links.

Rear Open Sights — The making of a good leaf sight as shown in No. 1, Figure 115, requires special form cutters as well as special milling-machine fixtures, but once the tools are made it is a very simple matter to turn these out with 1, 2, 3, or 4 leaves. The base is first milled from a piece of cold-drawn steel, with a width selected for twelve bases at once, by allowing the formed milling cutter to mill out the leaf-sight center. After this is milled for the desired number of leaves, it is sawed off to width in the milling machine with a slitting saw. The bases are now clamped in the vise or a fixture and the dovetailed spring pockets milled transversely.

Having completed this part of the milling operation, the small holes are drilled to hold the leaf in position. A No. 60 drill is used, so care must be exercised in the pressure applied in feeding through the stock. Of course you have a drill jig to hold the base; have it set at right angles; the drill must be kept very sharp and the point well lubricated with hard oil. Another drill jig is used to remove the center of the formed section and this is filed out to a square gauge and the leaves fitted.

Next in order comes the form milling of the leaves. These can also be milled in the strip so that it is possible to secure twelve leaves. The strip of material selected is first sweated to an iron or steel block; this is clamped into the milling machine vise and the form cutter allowed to run the full length. This operation not only mills the leaf to the required thickness but to the required form at the bottom. The pieces are now taken off the block and the solder removed; then they are cut to the proper width with a slitting saw in the milling machine. (For such small work as this a bench milling machine is best.) Having cut these off, the next operation is to mill them down to the slot width, which is done in a jig on the drill press, the jig being so constructed that it can be reversed and the opposite side milled before removing from the jig. A special end cutter is made so the correct radius is formed that has been milled in the base, and when the leaf is raised or lowered it will rise around this part. The leaves are now fitted into the slots and drilled in position.

The next stage of the operation is to make the small flat springs that the slots were milled for. Because the springs are of different lengths and have a slight angle in them, it is best to fit these all in at one time and then set in the leaves. Before the leaves are set in position a small radius is filed on the overhanging ends; this is best done with a hardened form by setting it against the leaf and filing close to the block. A small parallel clamp is used to hold it in position while the ends are being formed. No. 60 drill rod is cut to length and the leaves assembled in the base. This is not a complete description of the manufacturing of a folding leaf sight, but with such information and with a sample before him the student can construct one. The main question is the correct form of sight to use rather than the manufacturing principles involved.

In selecting an open sight it will be well to choose *A* in Figure 116, a plain flat bar possessing no notch. This is one of the best rear sights constructed on the theory that the eye naturally finds its center, particularly when a fine platinum line is placed $\frac{1}{16}$ inch from the top, or to the top, extending to the bottom, or an ivory inlay formed in the shape of a pyramid and the point coming to the top as in *B*. It is surprizing how accurately shots can be placed with a sight like this. Without the lines, the most minute error that the eye might make would vary greatly on the horizontal, but the vertical would always be perfect, for you can estimate very clearly just how much front sight you are holding over the bar. The platinum or ivory lines, together with the proper distance from the eye, will give very clear definitions of the bar and lines. Such arrangements permit exact centering of the front-sight blade by the eye and at the same time have the wonderful advantage of cutting off the exact amount from the top of the front sight on the object, making exact horizontal shots. This is easily done with such a rear-sight bar; the front sight may be cut coarse or fine with great accuracy and extreme clearness of vision on the object aimed at. Sights made on this design are a great aid in open country when aiming at running animals. For wilderness work it is better to have a very shallow V as in *C* with a platinum line running into the V. A U-notch as in *M* is better than the V; this type of cut-out will not confine you in locating the center of the bar and the front sight upon the object. The small U allows the front sight to come flush with the top, permitting the full view of your quarry; with this held in the notch the horizontal is always perfect.

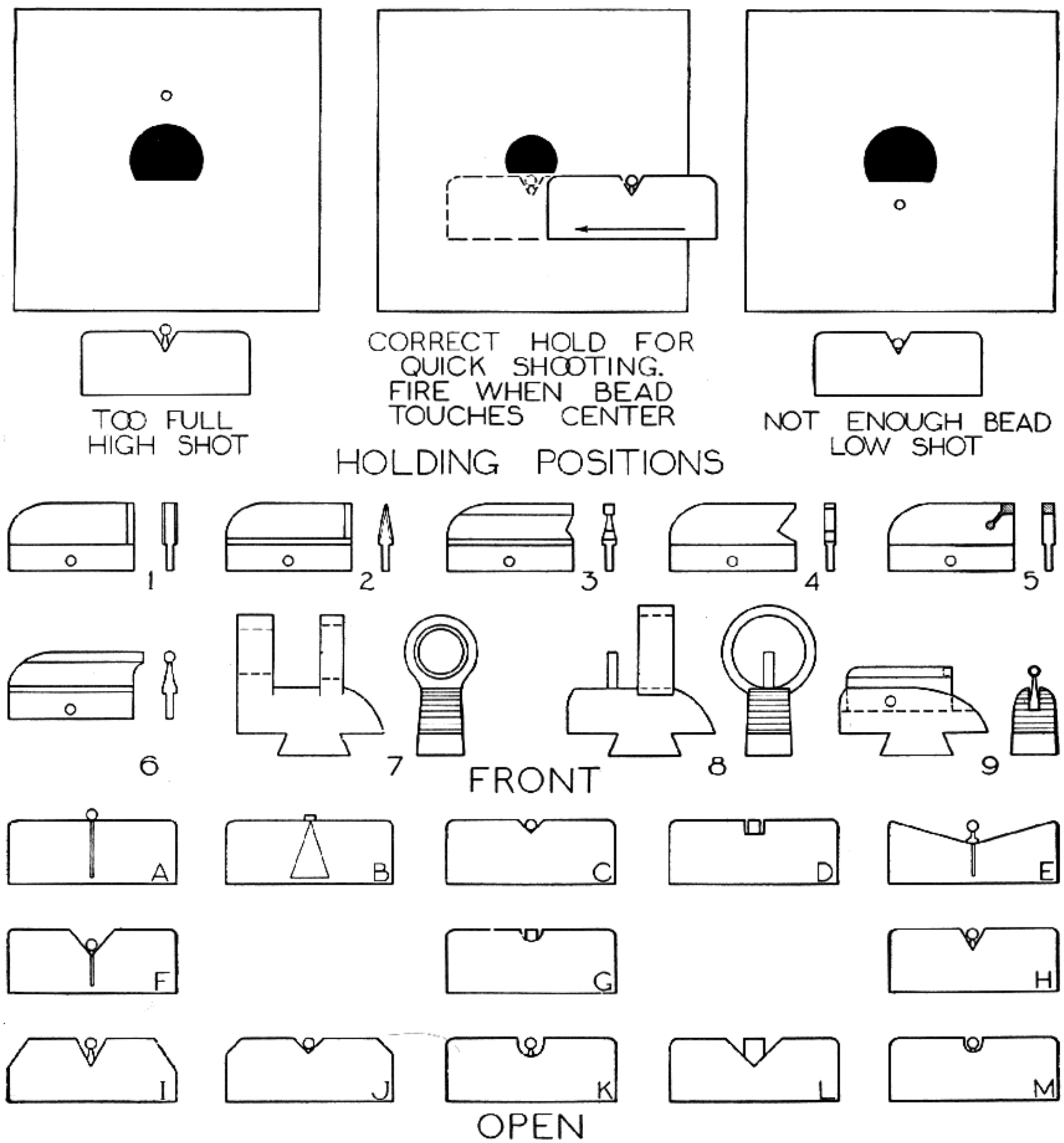

Fig. 116
Front and rear sights. Method of holding on target or object

The same settings are equalized with *D* and a square front sight, but still a number of men will prefer *G*, which has the small U. Such a choice can only be determined by experience. A leaf made like *E* is only used on double heavy express rifles for large and dangerous game, as a sight of this design is quick and positive on charging animals but not so satisfactory on a sporting bolt-action rifle.

The correct position of holding an open sight on the target is rather confusing to some men. Figure 116 illustrates the correct position of holding. It is a temptation to go into a long discussion of this subject, but I shall only treat it briefly. The main object is to draw the front sight down into the notch, and allow the top of the front sight to come flush with the top of the bar or open sight. If it is a flat bar devoid of a notch, the front sight must show over it 0.010 inch. For normal shooting at 100 yards, hold this position and swing the

rifle from left to right or right to left. Always hold the horizontal as shown in the illustration. If you hold only the vertical with an up-and-down movement, the shots are sure to be scattered over the target. Hold at six o'clock on the horizontal position and fire the instant the sight cuts the black and white of the bull's-eye, and the groups will find a perfect center. All hunting arms are sighted in at the point of aim.

In the same drawing two targets are shown, and the position of holding the sights at the time of firing; the front sight is in the two extreme positions in the notches. With a deep notch as in *F*, Figure 116, the bead must be drawn well down, but when the notch is rather shallow the bead should come flush with the top of the bar, except on the wide and shallow bars, for then the bead must show in the center.

Figure 117 illustrates three different styles of targets used for testing or sighting-in purposes when setting on new sights or for targeting rifles. *A* has the under side of the circle cut off straight across and is one of the best targets to use for either open or aperture sights. *B* is the inverted T which is very good for off-hand work, while *C* is the cross inside the black circle. This form of target will always keep the bead well centered and at the same time give good practise in getting the shots off quickly in offhand work.

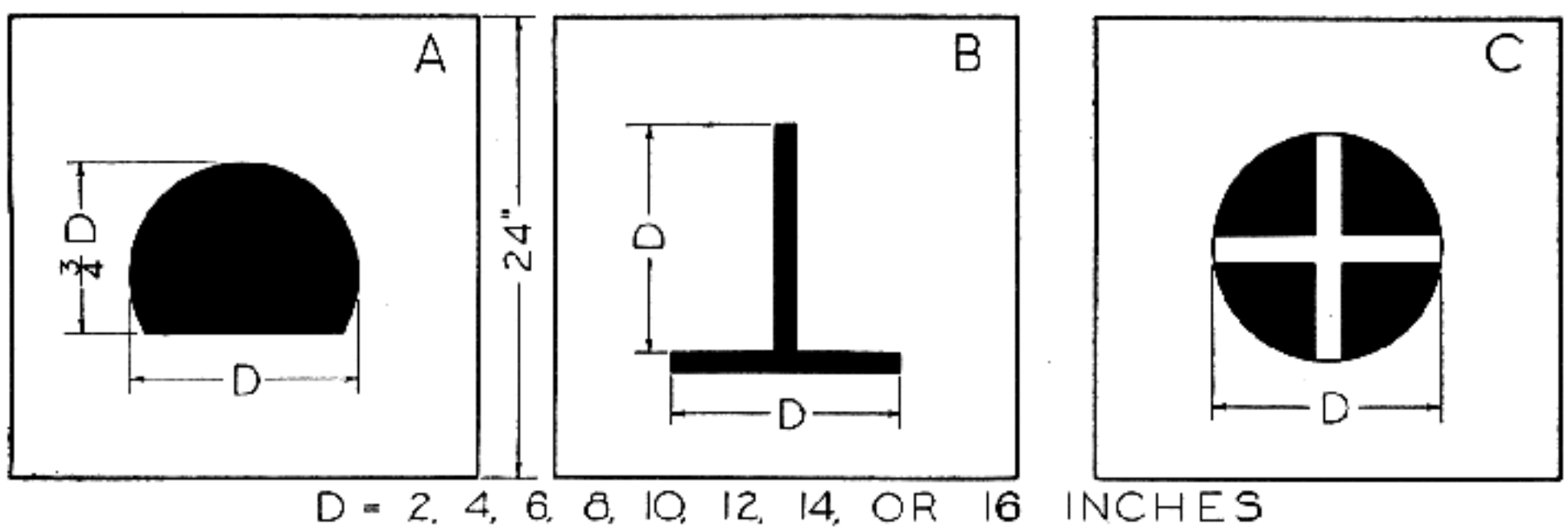

Fig. 117
Design suggestions for targets

These targets can be made very easily by cutting a stencil out of the center of one of the cardboards or heavy paper. Different sizes have been given so you can select the one most suitable for your requirements. I generally use the 4-inch size for 100 yards and 6-inch for 200 yards.

After choosing the right open sight, the next important consideration is the ranges—and knowing how to hold the bead in the rear notch. A coarser bead will give you a high shot and a fine bead a low shot. It will be well for the beginner to practise these holds so that he can have the bead come in the correct position each time, except on long-range shots; then you must estimate the distance and proper amount of bead to take. When a combination is made with a flat open sight and a straight front sight, it will permit very accurate cutting-off of the correct amount of front sight if one knows his rifle.

The making of the sights shown in Figure 116 requires rather extensive toolmaking experience, so I would advise the novice to purchase the completed but unfinished sights and file out the notches. They also come with platinum lines; a fine line is milled in the center; to hammer in the platinum wire requires a small bench miller and small slitting saws. The ivory lines are made in two ways if you use pure ivory. For the first, a small hole is drilled into the center of the sight so that the hole breaks out along the edge of the face. A piece of ivory is turned on a bench lathe, driven into the drilled hole, and the face is filed off, exposing a clear white line. This operation requires time and patience, but when completed makes a perfect white line which has no equal. The second method, used for either the white line or the pyramid, is to mill out the line with an end mill and fill the slot with white lacquer. The pyramid is inserted the same as *B* is laid out; first it is milled out half-way through the leaf with a very small end mill and then a punch is made of the same shape and driven into the milled outer section to remove the corners. The impressions made with this broach in the corners are then chipped out with very fine chisels, made from small worn needle files. After the corners are finished clearly and distinctly, the impression is filled in with white lacquer. Before the lacquer is placed in this insertion, take a fine chisel and chip up little burrs on the bottom so that the lacquer will adhere and never come out from recoil. The same must be done with the straight line milled for the center. After the lacquer becomes dry and hard, it is filed off and polished with very fine No.

7/0 sandpaper; the white will appear clear and distinct.

Aperture Sight — As the name implies, this is a rear sight consisting essentially of a small or large circular aperture through which aim is taken. Any rear sight of this nature is best situated just in front of the eye—as near it, in fact, as is consistent with the caliber of the arm, its safety and recoil. When aim is taken, no attempt is made to focus the edge of the aperture, but since it is circular, it is very easy to put the front sight and object sufficiently near the center. Any error involved will be negligible. Since the nearest object which needs to be focused is the front sight, it follows that the lack of definition is much less than when using the open design of sights. This lack of definition is further reduced by what is known as the orthoptic effect of the rear aperture. This acts by blotting out the more peripheral of the rays which would otherwise pass into the eye so that the blurring of any object out of focus is reduced. This principle is exactly similar to that of reducing the lens of a camera in order to obtain what is known as depth of focus, *i.e.*, reasonably good simultaneous definition of objects at various distances. The orthoptic effect of the aperture is similar to that of the pupil of the eye and is of greater relative benefit to the man who normally has a large pupil and very little pigment in the eye. The optical advantages of aperture sights are particularly marked in the case of elderly men who may find shooting with open sights more or less difficult. Age results in very little diminuation in the desired accuracy of the aim when aperture sights are employed. The size of the aperture is of the greatest importance; too small an aperture unduly reduces the light and makes the object difficult to distinguish; too large an aperture reduces the orthoptic effect and makes centering of the front sight and object more difficult. No one size can be established as a standard for all individuals under any circumstances. Some arrangement for changing the size of the aperture would be theoretically desirable. The average size for shooting is 0.0625 ($\frac{1}{16}$ inch). For shooting in the field $\frac{1}{10}$ inch at least is required.

It will be evident that the aperture sight permits of much more accurate aim being taken than does the open sight. It has, indeed, one disadvantage; it is more difficult to find the object quickly when aiming; tho if the exact position of the object or target is known (as when firing at a known target) it is possible to aim more quickly than with open sights. This defect of the aperture sight is due to the blotting out of a part of the field of view by the circular disc or the turret in which it is held. The closer the aperture is to the eye, the larger is the field of view, and hence the less noticeable is such a defect. The better modern aperture rear sights are made adjustable vertically by means of a screw with a knurled head. Clicks are provided by means of a spring and plunger, engaging depressions on the under side of the head. A similar lateral adjustment is also provided for windage.

Improvements are made on all styles of aperture sights year by year, but there is still room for more, not only on hunting rifles, but on modern target arms. Vernier scales can be provided to give the approximate degree a sight should be set for different velocities of wind to read the correct amount of movement required. Another scale graduated in terms of range could easily be worked out, but these are experimental factors, and the various types of ammunition involved must be considered.

Open Sight — This is the type used on most military arms as well as sporting rifles of various calibers. As is well known, it consists of a front sight near the muzzle of the rifle, and a rear sight the essential part of which is, as a rule, a notch of some special shape, a U, V, or square notch. The front sight generally has some bold upstanding blade which can easily be seen against the object. Various shapes of rear and front sights have been tried with the object of securing their more accurate alinement with one another, but it has been an endless experiment. No shape seems to have any special advantage, and certainly none can give anything approaching perfect alinement owing to the impossibility of focusing more than one of the three objects, one of which, the rear sight, is naturally near the eyes. The position of the rear sight is of the greatest importance. If it is too near the eye errors of alinement from lack of definition will be increased. On the contrary, the effect on the aim of a given error of alinement between the front sight and rear sight is increased in inverse proportion to the sight radius, or the distance between the front and rear sight. This must not be unduly decreased by moving the rear sight too far from the eye. The proper distance for those with normal eyesight is to have the rear sight about 15 inches from the eye. Possibly a greater distance may be an advantage for those who have advanced in age.

Front Sights — The sights used on the fore-end of a rifle barrel are made in a variety of shapes, but for general purposes the one object is to have a piece of thin steel as a blade or an aperture in order to place the shots accurately upon an object.

For practicability the sights illustrated in Figure

116 are of good substantial construction; these often cannot be purchased. From the number of designs shown, you can make up any combination you wish. As an instance, No. 5 can be made round on top instead of flat, and the same idea of inserting gold at the tip can be applied to either No. 3, 2, or 6. The most essential points to consider in constructing front sights are strength, shape, and clear definition. Accordingly, tool or alloy steel should be used to give these the strength required. Front sights made of cold-drawn steel are apt to bend from the slightest fall or tap, and at times even break off. Front sights should be securely fastened to either the barrel or sight bases by various means —dovetailed slots, pins, or suitable screws, the latter being the most practical method. The sights illustrated in Figure 116 are to be placed in a milled slot so that when other bases are in evidence on specially made arms which require a dovetailed base these can be made accordingly.

Make the sight shown in No. 5, Figure 116, of steel; insert the gold in the slot and drilled hole, and hammer it in. First, drill a hole $\frac{1}{16}$ inch in diameter on a 45-degree angle from the corner of the square seat. The hole to be centered should be about $\frac{5}{32}$ inch down from the corner on the angle; countersink this hole on both sides. With a jeweler's hack-saw, the blade measuring between .020 and .025 inch, saw from the corner on the angle into the hole. File an angle on both sides of the saw slot so that the gold will have an anchorage when hammered in. To file this angle, use a fine knife-edge needle file. Use $\frac{3}{32}$-inch gold wire between 16 and 22 carat, and flatten the end so that it will just drive into the slot. If it is impossible to purchase gold wire of this diameter, have your dentist cast an ingot of gold this size and about 1 inch in length, enough for a number of insertions.

Before hammering the gold in place, drill a small hole into the center of the blade from the top just so a part of the drilled hole will break through, the depth to be about down to the corner of the saw slot. This also gives a better support to the gold after it is hammered into place. Drive the hammered gold into the slot and cut it off just long enough so that a good heavy bead will be formed. Hammer the gold into the saw slot from both sides; first on one side and then on the other. The blade must be reversed often and a good hardened piece of steel should be fastened in the vise. With the end piece which forms the bead, hammer this down well into the small drilled hole in the face. To do so, the blade should be held in a small vise or between lead jaws in the bench vise. File all the surplus gold from the sides and file the bead to any desired shape. You may either file a radius on the top, making the gold and steel round, or even square; file it to any desired width or diameter which suits your requirements best. Leave the point square and flat, and then polish with fine emery cloth. Remember that a dull appearance on the gold will not reflect light as much as if the surface is given a high luster or is polished with rouge.

To convert this perfect gold-bead front sight into an ivory bead, all that is necessary is to coat the surface of the face with white lacquer which can be applied with a common toothpick. A small vial should be carried in the recess of the butt stock under the butt plate, and when you find it necessary to convert the gold bead, the toothpick should be dipped into the lacquer and just a drop placed on the face. This produces a perfect white front sight, for it dries a few minutes after application. Then, if you wish to change back to the gold bead, all that is necessary is to remove the hard white substance with a penknife. Thus you have two sights in one; it is never necessary to remove the sight after it is once set in place.

The removal of sights in the field or at camp often ends rather disastrously, because of losing the pins or screws by which the sights are held in place. If held in place by screws, it very often happens that they are rusted and it is impossible to remove them. In many instances you do not have the proper screw-driver to remove them. If pins are used, you do not have the right size of drift punches, and besides you never possess the proper facilities to hold the rifle barrel to make such changes. But with the white lacquer in your kit the change can be instantaneous and you have an ivory bead which can never be broken as in the use of real ivory.

Next to the gold-bead sight is No. 1, or 2, used for a hunting rifle. This is the straight square steel blade known as the marine type of front sight with flat top. These are made in various widths up to $\frac{1}{8}$ inch, as No. 4 shows, which is the revolver type of front sight. I never make No. 1 any wider than 0.090 for hunting purposes, as this is the extreme width. No. 2 is the tapered front sight made when one wishes a bead of $\frac{1}{32}$ inch and is the type I often recommend, because of the fact that it is impossible to make a small bead and have strength in the blade. By tapering it to a sharp point, the rest of the blade is well supported and will never be bent by hitting it against an object. This front sight is very satisfactory to use in connection with an aperture sight, but when used with an open sight in bad lights it is rather hard to pick up.

Many men design a sight as in No. 3 with a square top. This sight is rather difficult to make

and more difficult to keep straight because of the frail support it has. The center must be milled out so that the thickness will be no greater than .020 inch in order to get the correct effect of the square bar. When greater widths than 0.060 inch are made it is possible to increase the web thickness, making the sight more substantial. No. 6 is a sight similar to No. 3, except that it has the round body held only by a thin web; however, you will be flirting with the same trouble pointed out on No. 3. Many factory sights are constructed like No. 6, except that they have the full support of a substantial web and not the overhanging round circle, but are made similar to No. 5 with the support to the bead. Some manufacturers continue to make the round-pointed gold bead together with the top of the round steel which is gold plated. These sights have been discussed before, from a different angle.

No. 4 in Figure 116 is the hawk-bill sight which is the most practical for target revolvers, because of the clear distinct definition it gives on an indoor target. When used on a rifle, great care must be used in handling, for a sight of this kind will cut or tear the flesh very badly if the barrel is allowed to slip through the hands from force of habit.

Nos. 7 and 8 in Figure 116 are the aperture front sights for target purposes. No. 7 has the two diameter holes, the front one being the largest to allow an optical effect in the smaller hole. The front hole is tapered by using a taper-pin reamer which gives a very clear and distinct outer ring. Various sizes can be made to suit different conditions of eyesight and at the same time give the proper clearance between black and white on the target. The rear face may be bell-mouthed, as this gives a better effect to the front aperture. It is not advisable to use a bright enamel or lacquer on these two rear faces of the aperture, but to have a jet-black enamel baked on, if this substance has been agreed upon to blacken the sight with.

No. 8 has the aperture and post integral with the base. The post may be filed to any width desired for various requirements. The aperture produces a shaded effect on the post and even in brilliant light the post will appear well defined against the target. This sight is a wonderful help to those with failing eyesight or to those who at times find the front sight fading out. It is also a great aid on a target rifle used for long-range work.

An ordinary globe sight with interchangeable disc and post has a straight tunnel effect. Such sights are very good and meet with the approval of many target shooters; however, they are made upon the wrong principle. In designing this type of sight there must be an optical effect to break lights in any direction they may be coming from, and the post must be clear, even tho the sun is shining toward the shooter. This sight is only a simple improvement over the old Winchester spirit-level sight that we see on some of their old single-shot rifles. Some of the finest work was done with this sight in many of the Schützen matches over thirty years ago. The improved aperture front sight will be discussed later.

No. 9 in Figure 116 is a standard factory sight fitted low in a Springfield front-sight movable stud when using open sights or a low aperture of special construction. By mounting this sight low in the stud, there is very little danger of bending it in a bad fall or any other way. When setting it in low, it is necessary to cut off the bottom and drill a new hole for this pin or screw if one is used.

If a front sight is to be changed very often, no matter what make of arm you are using, replace the pins with small fillister-head screws. An extra sight may be carried for emergencies and easily changed with a small screw-driver.

You will notice that I have constructed these specially-designed front sights on the principle of strength and stability together with a practical understanding of the requirements of front sights. At the arsenal, all work when completed and accepted must be sturdy and capable of enduring hard service in the field. If the beginner intends to carry out certain ideas he should study the possibilities of extreme conditions under which it will be used. A pessimistic but wise plan will be to anticipate the very worst conditions; it often changes our methods of construction.

Most of the front sights illustrated in Figure 116 are made sturdy, but there are those of a frail design which are used mostly on target arms. The most delicate sights are sometimes ordered, so I have designed these to give the student an idea for making them. I would advise making everything which happens to come into your mind; nine ideas may be wrong and one may be right, but this is the way success is arrived at in all experimental work. It is easy to make a thing, but it takes a wise man to criticize his own work, profit by his errors, and build another and another until something is arrived at which will prove successful. Through such persistency you will gain experience invaluable to yourself and others.

Aperture Front Sights — The improved target and hunting type of front aperture sight is designed on the optical principle of a telescope, being constructed to break light and give a clear and distinct definition as it is brought upon an object. Many men have their front sight fade out because of defective vision or the impossibility of holding the

front sight on an object for any length of time. With a front sight of such a design it is possible to secure any combination of rings to accommodate defective eyesight. The rear retaining rings can be used to place any desired form of post or small aperture by using a watch hand or reversing it and using the point.

The apertures can be made to any size and these used in place of the sight-retaining rings to convert the sight into a standard aperture sight pure and simple. The reticules or light-breaking rings can also be made to a diameter which will produce the desired effects of light upon the front or rear rings. Naturally, defective eyesight is not the same in all men, so different sizes must be made to find a perfect combination that will allow clear and distinct aim and reduce errors to a minimum. The error of aim with the best sights now used is about 1 inch at 100 yards. This is based on perfect vision; therefore, this error is increased at greater distances. The greatest trouble experienced is the fading out of the front sight, but with a sight that will break lights, the eye is able to hold the front sight on the object longer and consequently get the shot off much more quickly. One type is made for target work and one for hunting, by removing a section of the top in order to allow a greater flow of light in this opening.

It is very evident that in the manufacture of aperture front sights none have been made with the idea of using the principles of certain machine refinement. Most of the aperture front sights have been constructed with a view to satisfying the target shooter, but not the man with defective vision. His choice is limited to a telescope.

No dimensions have been placed on the parts shown in Figure 118, but the outside diameter of the tube is $\frac{5}{8}$ inch and the length is governed by the apertures, reticules, and retaining rings. The front locking screw is held in place by a thin spring fastened in two different ways, as the drawing shows. The inside of such an aperture sight must

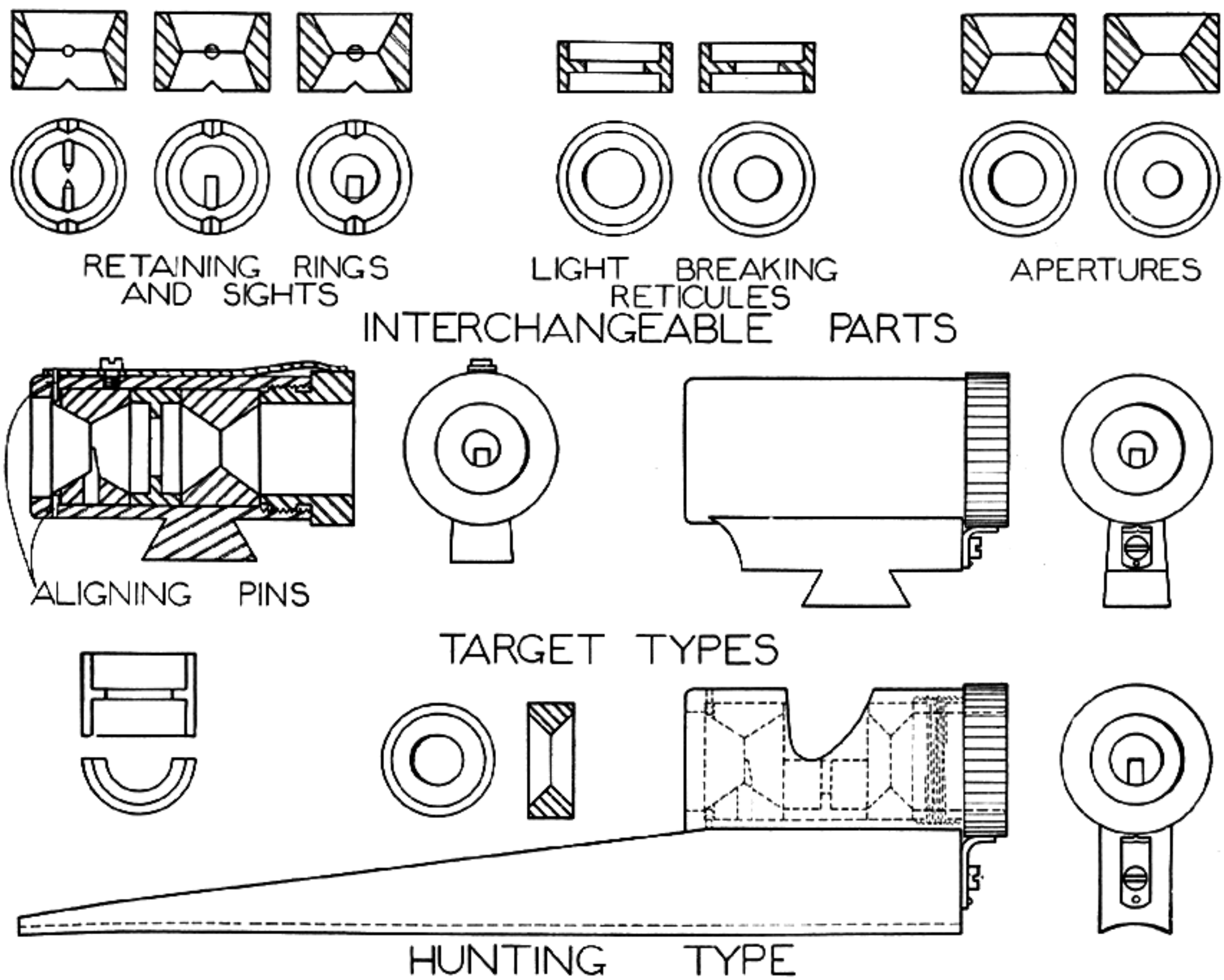

Fig. 118
Improved design of aperture front sight

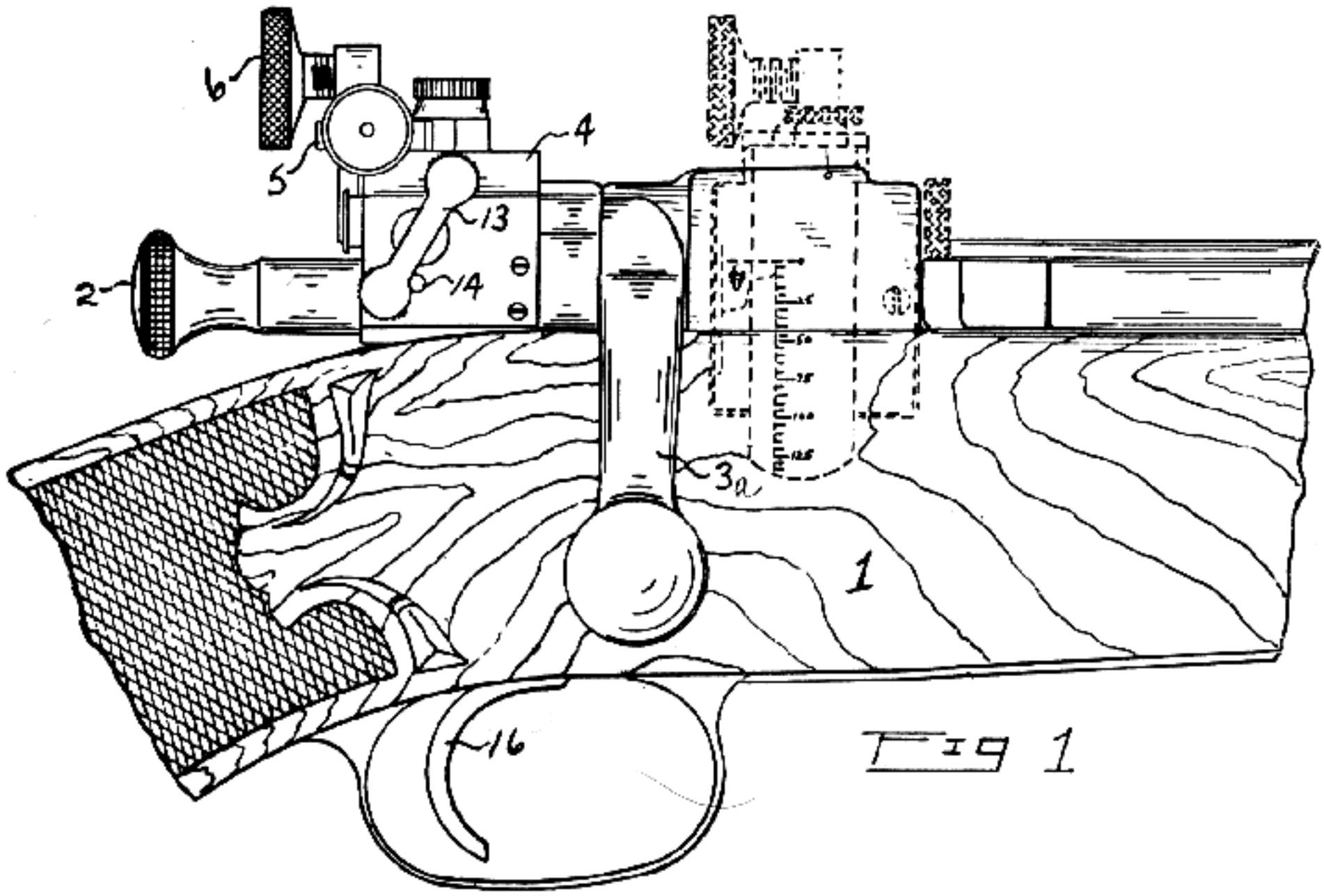

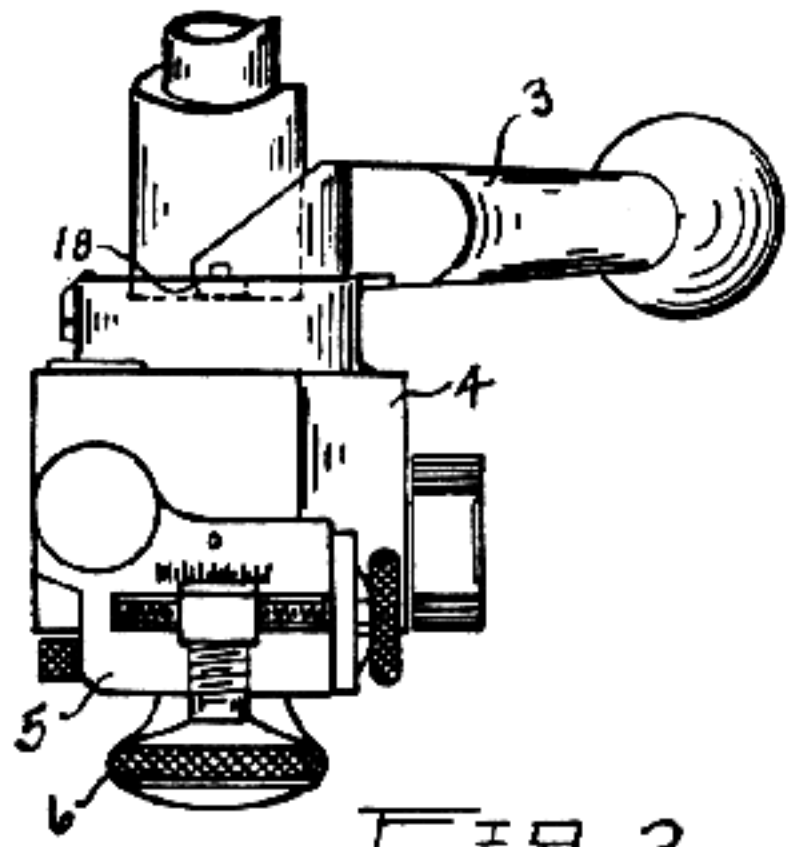

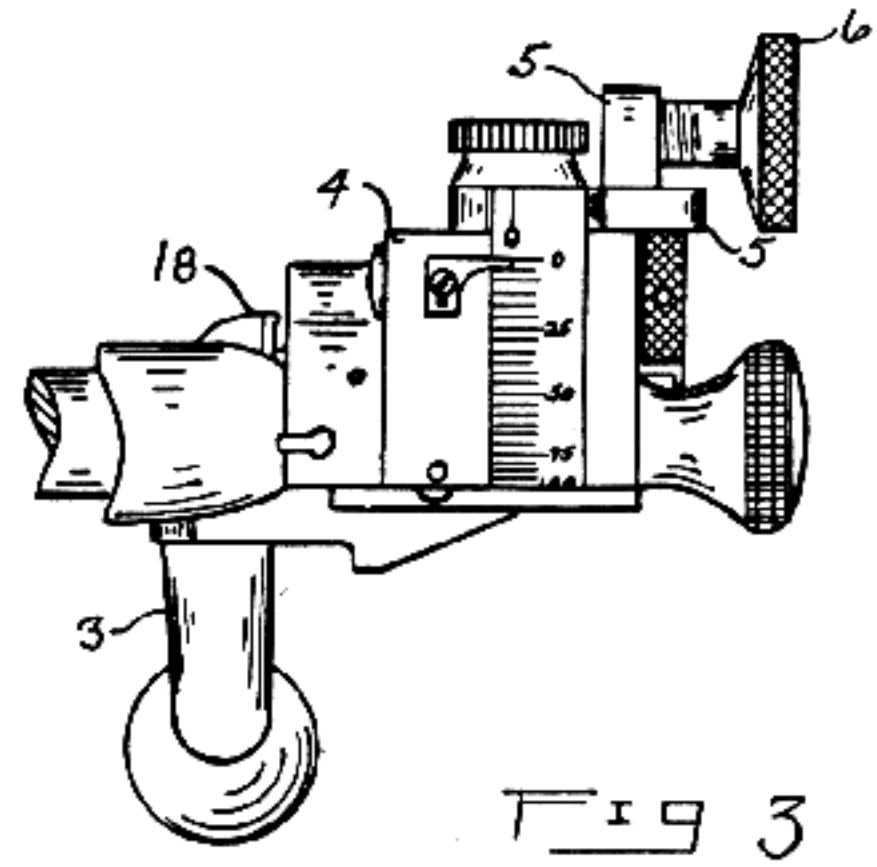

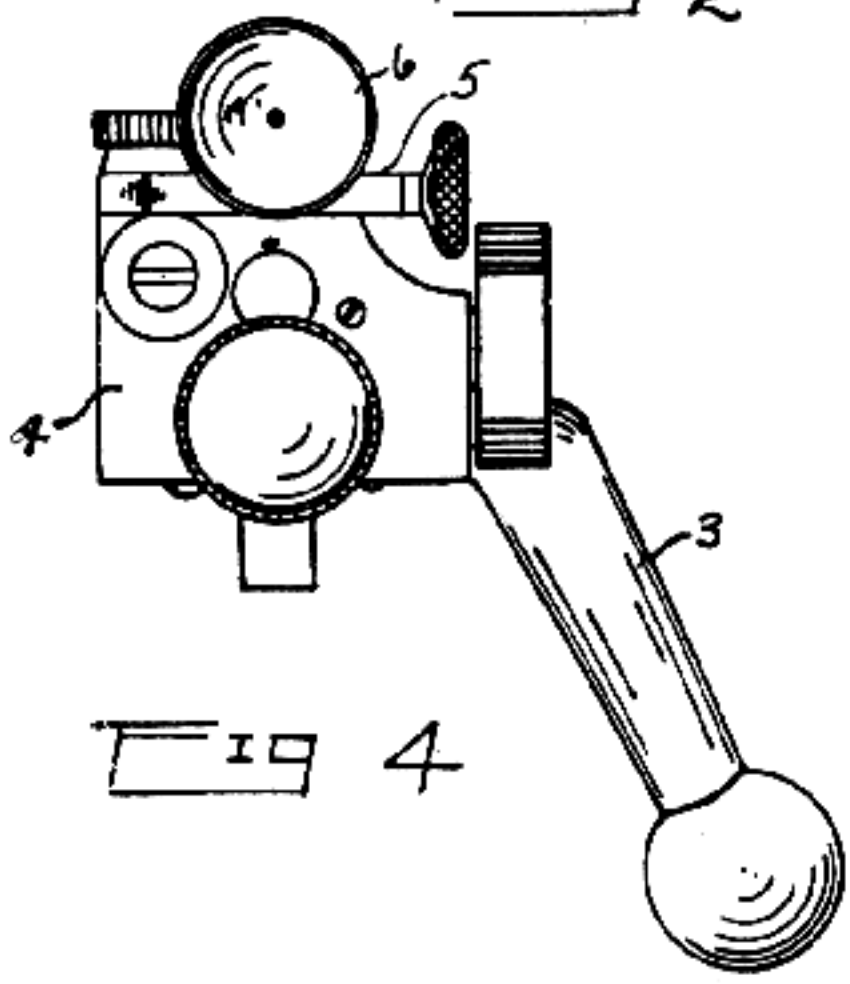

Fig. 119
Howe-Whelen aperture sight in position on rifle

have these parts turned and bored perfectly true and the back rings cut so that the alining pins will bring the pieces in the exact center. All these parts have their optical centers, and these may or may not be true, or correspond to or be in alinement with the axis of the tube; it is essential to have these parts all in perfect alinement. Since the Springfield front-sight base is the most popular, one is designed for that while the other shows a standard ramp with the sight brazed to the top in the correct position.

It is an easy matter to design such a sight for any type of rifle, and those with eyesight difficulty will find it a great aid in their sighting arrangements. Its rigid construction is one of the most desirable features, because it will stand the hard knocks of real service. With such a sight the rifleman can throw his rifle to his shoulder and as he catches the object the true aim will be clearer and even brighter than could be had with any standard sight of similar construction. In fact the ideal front sight has at last been designed.

Bolt-sleeve Sights — When Colonel Whelen and I designed and made the bolt-sleeve sight, our object was to eliminate all this by designing a new sleeve and have the sight slide work in it, together with the safety which was placed on the right side in a location so that the thumb could operate it with ease at the instant of firing. A hardened pin was placed on the one side, with a strong spring back of it, which would always keep the sight solid and in position. Figure 119 shows this sight on a Springfield Model 1903 remodeled rifle.

The same idea was applied to a Mauser action by designing a new bolt sleeve. A sight like the Howe-Whelen is rather expensive to make because of the precision work required for its perfection. A number of these sights were made and sold to the public but were of rather poor construction, since the

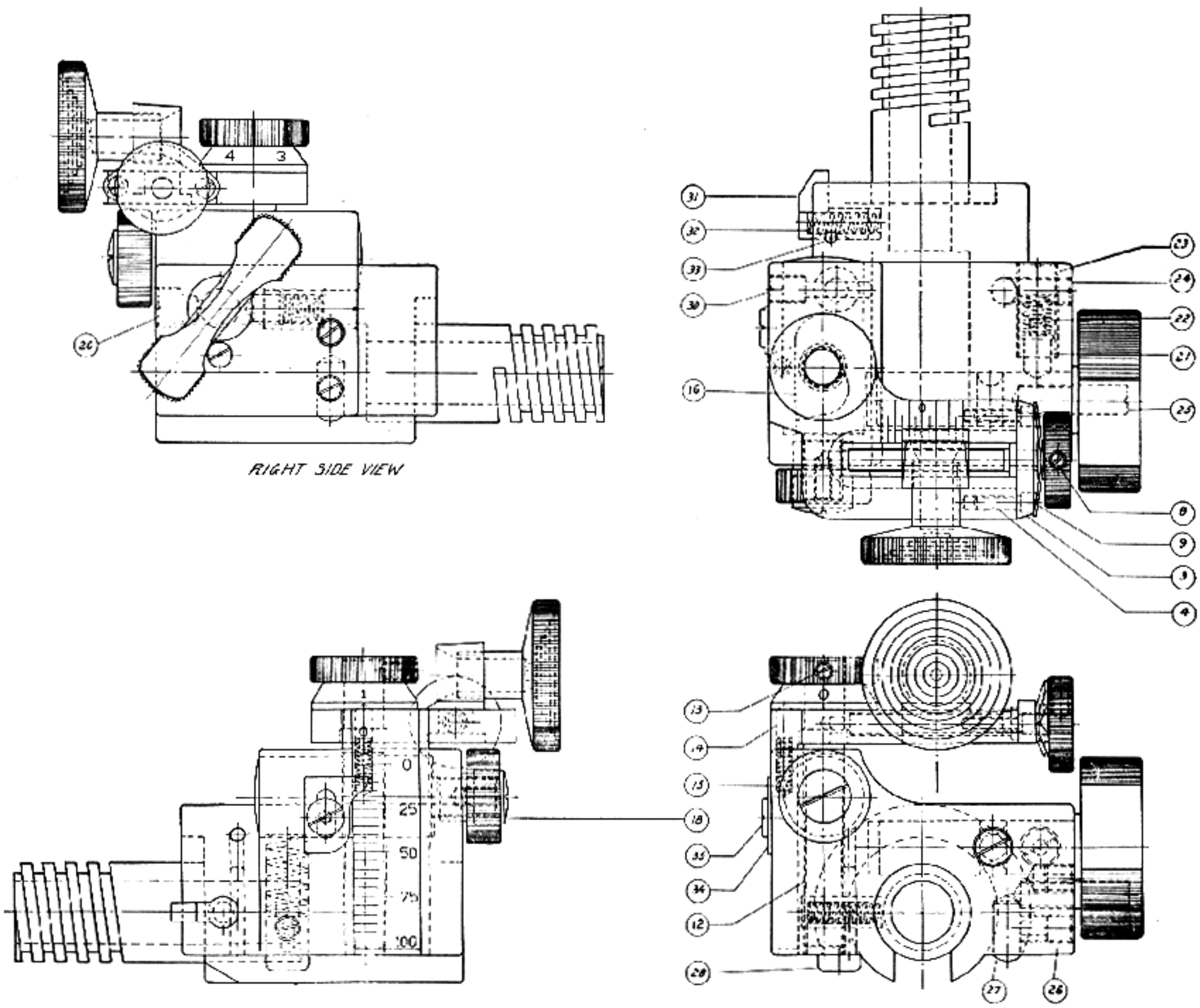

Fig. 120
Assembled view of Howe-Whelen aperture sight

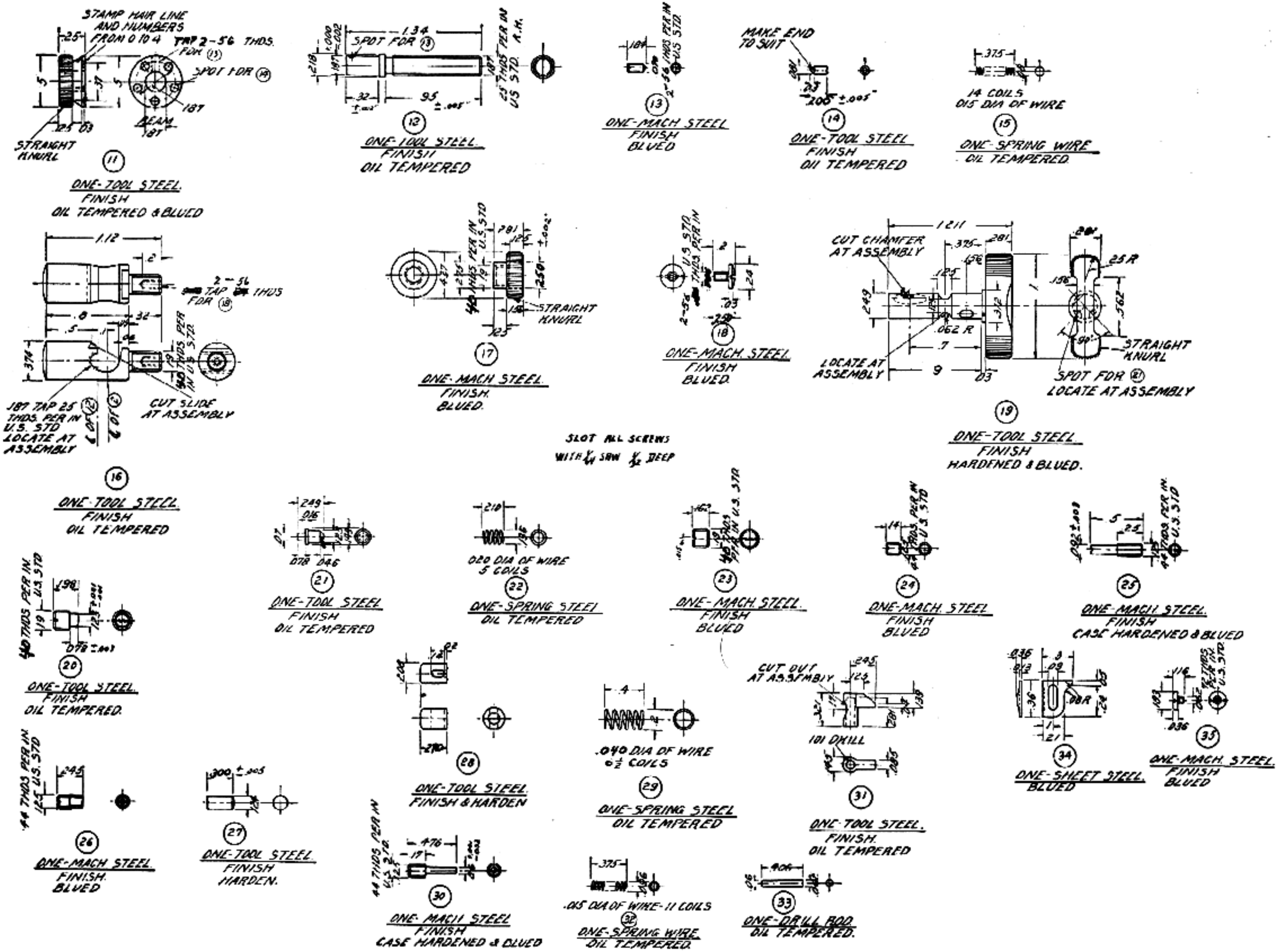

Fig. 121
Detailed parts of Howe-Whelen aperture sight

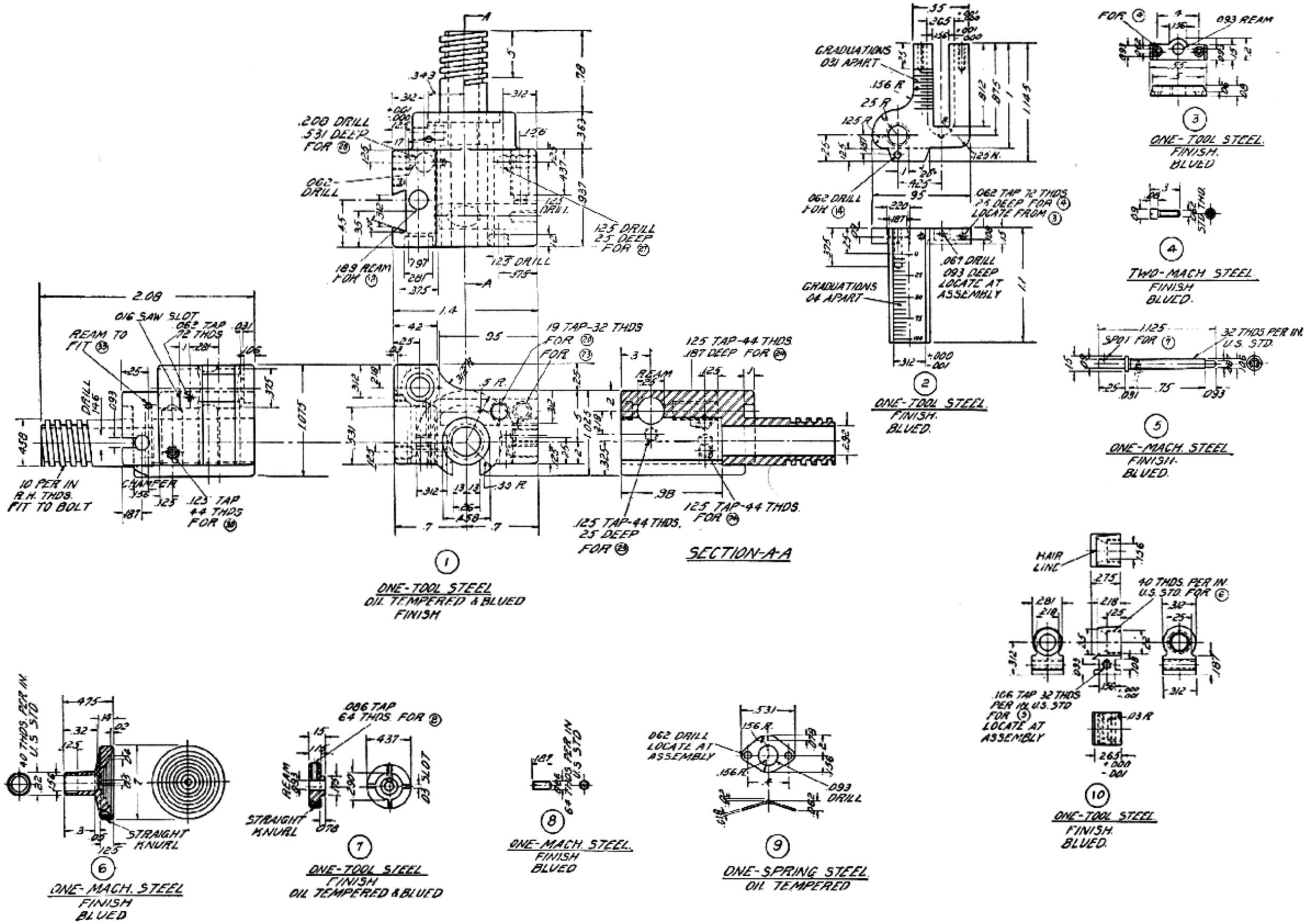

Fig. 122
Detailed parts of Howe-Whelen aperture sight

manufacturers did not have the necessary experience to produce an article of such delicate design and precision. However, if they were made in quantity and made right, they would be one of the best bolt-sleeve sights on the market today, because of their simple application and the fact that they are better than 2 inches closer to the eye. The sight did not require any screws to fasten it in place; all that was necessary was to remove the regular sleeve and assemble the sight as tho assembling the entire bolt mechanism, or as tho it were the sleeve itself. The entire new sleeve and all sighting mechanical arrangements were in the block. The safety feature of this sight was one of the best, and I believe there was never a better feature incorporated into a sleeve that locked as this did and in a position so accessible in quick release as the rifle was brought to the shoulder. Another advantage of having the safety in such a position was that it made it possible to mount a hunting telescope very low without the interference of a safety as on the Springfield or Mauser actions. There have been many sights made since Colonel Whelen and I designed this one; some have been good and others just mediocre. This, however, has opened the way for subsequent ideas and experiments.

Figure 120 shows the assembly of the Howe-Whelen sight and Figures 121 and 122 the details of the component parts. The mechanically inclined person or engineer will see that one of these is rather complicated to construct. The necessity for a substantial sight of this nature led to this design. It made it possible to have the aperture closer to the eye and at the same time it was advantageous for the arrangement of windage and elevation on the Lyman principle. As one progresses in making these he will develop decided ideas regarding sights; this will lead to some that are alone in their class.

Since the drawings of these sights are self-explanatory we shall proceed to examine and discuss the possibilities of manufacture. The body must be made from heat-treated alloy steel to give the desired toughness; the body acts as a sleeve for the bolt, at the same time housing all the essential parts of the sight. The first operation on the body is to drill and ream the hole that the cocking piece rides through; also to counterbore the rear end to the desired depth. A special mandrel is made and the front end turned and undercut, and square threads are cut to have it fit in the rear end of the bolt. After this operation the bottom is milled to form. The body is then laid out for all holes and drilled. The drilling operations on the body really require different drill jigs, but as only one or two will be made by the student for some of his Springfield rifles it is not necessary to make these but to drill from all the laid-out holes. After completing the drilling operations, the elevation slide slot is milled to the correct width. Holes are to be tapped, the sleeve catch to be fitted, and various other odds and ends done before the pack-hardening process takes place as described in Chapter VII.

Next in order is making all the component parts as given in the detailed drawings. There is quite a bit of work on the slide which should also be made from alloy steel to give it strength. The safety is made from flat tool steel, milled out to the required form, and the ends serrated for a thumb hold, so that the thumb will not slip off when operating it. A locking plunger can also be made to operate with the safety, but this part does not show on these drawings, as it is very simple in construction.

These sights call for graduations in minutes of angle, but as the standard sights are marked a certain distance apart both for windage and elevation we must place marks of some kind to set the sights by; therefore a graduation on the elevation slide should be equal to one turn of the thumb nut. The Lyman standard thread which is used on their aperture sights is 25 threads per inch; therefore one revolution of the screw means 0.040 inch that the slide is raised, which is one-twenty-fifth of the thread on the screw. Each mark on the elevation slide is marked 0.040 inch apart the full length and the nut graduated in five divisions or five equal parts so that it is possible to raise the sight 0.008 inch on every one of the graduation marks on the nut. In line with each one of the lines on the nut is a depression spotted on the under side so that a plunger will snap in place. The plunger has a small spring underneath it so that every time it is snapped into one of the small depressions a click sounds. The windage adjustment is made similarly, except that a flat spring is provided which has a small notch. This engages a similar notch in the face of the nut which has greater power of holding the nut in a given position and keeps it from being turned when rubbed against an object.

Obviously it would be impossible to construct a screw to take care of the trajectory of a bullet at longer ranges. To do this an angle would have to be made to slide the aperture forward by a screw to take care of the fall of any bullet, but that is another problem and must be worked out by the interested person.

The construction of the hole in the cup disc together with the correct form is a matter of choice. The size of the hole in the disc is a matter of proper application. You cannot expect to use one made for fine target work in the brush, nor can you expect to do your best work with a cup disc on a sight for hunting purposes; therefore, these must

be made in two different designs so that when viewing an object, whether target or game, there will be no interference with the view of the object or the surrounding country or shelter. At all times in shooting at an object, regardless of how near or how far away, your vision is taking in the rear sight, front sight, and the object, so do not make the mistake of using the same size of opening for game as you do for target work.

Sight Setting Gauge — Figure 98 illustrates a gauge which is a necessary addition to a gunmaker's tool lay-out. The gauge for height of sights is only used when making and setting new sights in position. The front gauge is inserted into the muzzle, which has been turned out of a 2½-inch bar of steel. I have placed four flat sides on it, measuring from center of bore; one for 1.100-inch height, for 1.05-inch, for 0.925-inch, and for 0.800-inch. The highest side is for long-range target rifles using heavy barrels. The 1.05-inch is the standard height for Springfield, using any form of receiver sight. The 0.925- and 0.800-inch heights are for special low mounting on Springfield and other bolt-action arms where low sights are required. The rear gauge is inserted into the receiver, which has a graduated scale or slide and can be set to correspond to the front sight only 0.050 higher than each of the sides on the front gauge. This gauge is also used to lay off the height of comb and heel when making a new stock, for it is possible to place a straight-edge over the top of it.

The rear gauge can be made to fit any receiver and still hold the same height at the rear, except on some rifles with small receivers. A gauge of this nature should be in the possession of every stock maker to secure the correct drop of stock by using the straight-edge illustrated in Chapter II, Volume I. By the use of the gauge and the straight-edge an exact duplicate is possible when making two stocks; otherwise mistakes are apt to happen by the "guess and try" method.

Those who attempt making sights which will be an improvement over those we have today will confer upon themselves a lot of hard study and research work to be able to arrive at a point where it is possible to apply the correct principles, putting telescopic ones aside, and departing from ideas of iron sights.

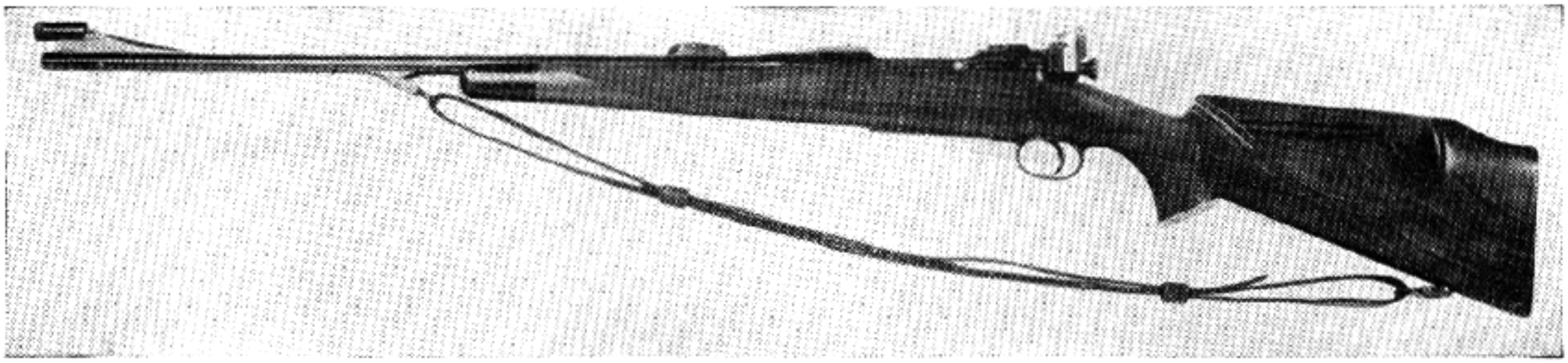

Fig. 123
Remodeled Springfield Model 1903 designed for Dr. A. J. Ries. Howe-Whelen sight attached

CHAPTER XXI

Spring Making

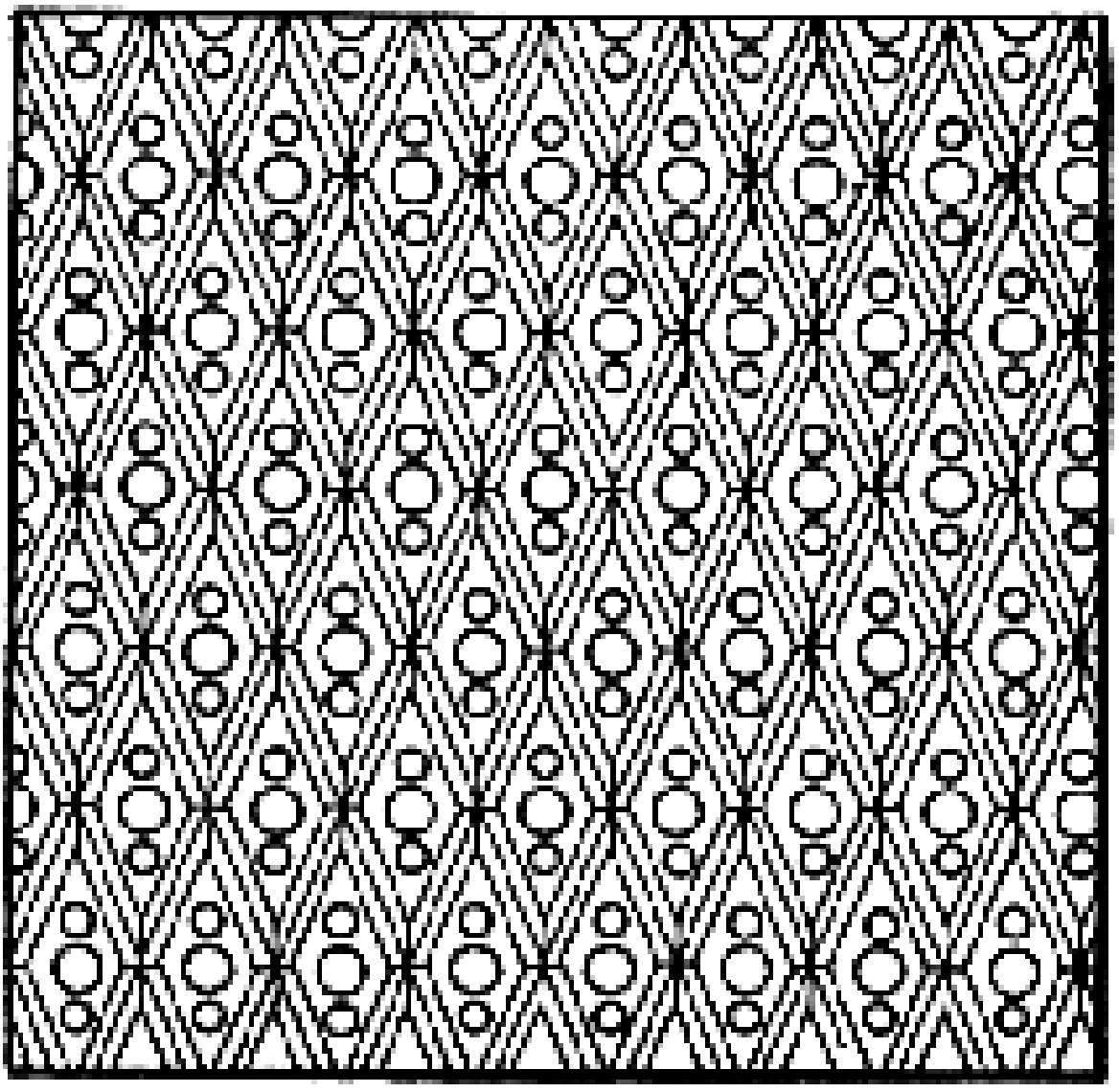

CHAPTER XXI

Spring Making

THE main principle underlying a spring is necessarily the elastic property of the steel of which the spring is made. The analysis of spring steel used in gun work should be:

Carbon	0.45—0.55	per cent
Manganese	0.50—0.80	" "
Phosphorus	0.03—0.04	" "
Sulfur	0.03—0.04	" "
Chromium	0.80—1.10	" "
Vanadium	0.15—0.18	" "

The process of fitting springs includes hand-forging, filing, polishing, heat-treatment, a tempering bath, and a final polishing before the spring is assembled. These treatments are applied to numerous flat springs used in shotguns, single-shot rifles, automatics, etc. The round, helical or compression springs made of music wire are untempered, except in very rare cases of larger, heavier springs where the wire runs above $\frac{3}{32}$ inch; these are the square wire springs.

The amateur should be thoroughly familiar with spring making, for much of this work will be brought to his attention. To acquire a fundamental knowledge, make a few sample springs; not necessarily for any particular gun, but merely as a means of gaining experience. Conduct your test in an experimental manner with various heat-treatments in the tempering stages of the potassium-nitrate bath. First, test a spring tempered to 700 degrees Fahrenheit, and continue the treatments, increasing the temperature each time until you reach 850 degrees. When you have acquired knowledge of tempers in the test for compression you will be able to guide future spring requirements accordingly.

The finest spring steel for gun work is made in Sheffield, England; the second best is of Swedish manufacture. American spring steel has been brought to a high standard of late years, but it is wiser to use only the best for complicated springs on a high-grade arm. You will find after considering the work involved, that it does not pay to economize when buying spring steel.

Forging — Quite as essential as good steel in making a satisfactory spring is proper forging. In forging, do not work the steel too cold under the hammer, but heat it at an even and uniform temperature. The bending of the spring requires three heats; one or two heats are not sufficient for the proper forms.

As an illustration of forging a spring, we shall select a main spring from an Anson and Deeley action where the forward end controls the automatic ejector levers. This spring has two actions to perform; operating the hammers and operating the small lever for the ejector cocking arm. When compression takes place, the slight sliding motion on the flat part must be made to the exact length to have the arm perform properly. We must be very particular when it is finished, so that the spring will function this part when compression is at its extreme limit.

Your forging equipment may consist of only a regular forge or blow torch, or you may have a standard gas furnace in which you can control the heat within a few degrees of temperature. Whatever your equipment may be, here are the correct details. The heat of the furnace must be about 1450 degrees Fahrenheit, and no higher than 1550 degrees. If the piece of steel you are using has been cut from a bar, place it in the front of the furnace and allow it to heat slowly before moving it into the direct heat of the flames. While waiting to have the steel rise to the proper heat, set three calipers to the broken spring; one for width, one for thickness at the heaviest part, and one for thickness at the thinnest part, allowing enough for filing. When the steel has reached the correct even color, withdraw it from the furnace and forge it. Never allow the color to run below the cherry-red heat. Continue until the spring is forged to the required width and thickness. Cool in lime and then file to the required width and thickness, allowing enough for length to finish. Polish the inside where it cannot be finished and then turn it over.

Place it back in the furnace and gradually heat to the same temperature. In forging it to shape, before putting the spring into the furnace, chalk a cross-mark where the bend will go. When it is heated to the required temperature, remove it from the furnace and proceed to bend. Since the spring is now very thin at the end, it cools rapidly, and you may be able only to turn it half way. If so, reheat it and completely turn the bend, allowing enough so that it will be possible to insert a $\frac{1}{32}$-

inch blade between the bend. Reheat again, remove from the fire, insert the blade between the bend and completely finish, hammering it well into shape. Because you have used three heats on the spring to turn it over, the molecules in the steel will not be injured and fractures will not appear later.

Uneven heating is the cause of most of the defects in forging a spring; later on we shall study the defects in the hardening operation. Great care and a thorough knowledge of the characteristics of steel are essential throughout the heating operation. It may be accomplished satisfactorily if the student will use good judgment and be certain that everything is carried out with precision.

The next operation is to place the correct curvature in the spring and also to have the bend parallel to each curve so that the compression will be distributed evenly when the spring is compressed. It may require three heats to secure the proper curves and to have it square. Placing curves in the spring is a simple operation and I presume that you will be able to do this without further instruction. After forging the spring to this point, hold it with the tongs while you turn the leaf to the proper curve, first one end and then the other. Maintain the same heat in the spring during the operation. Bend the spring a little more than necessary so that if the least compression takes place, due to a faulty tempering, the spring will not become so weak that it ceases to function.

After the spring is cool, the finishing takes place. In this operation, the spring is fitted into the slot and about 0.002 inch more is allowed than the spring pocket, so that it will enter freely. When filing the length, measure it with a micrometer to prevent any mistake. The rounded ends must be absolutely square and have a true radius. All file marks must be removed and polished so that when the final finishes are given the slightest scratch will not be detected.

Hardening and Tempering — A lead bath is employed to harden the spring. If the student does not have a crucible, a common ladle will serve as well. Place a sufficient amount of charcoal on the top so that it will not oxidize too readily. It will be necessary to coat the spring with common alcohol and chalk to prevent the lead from sticking to the steel and thus retard cooling of the spots where it adheres. Pre-heat the spring to between 800 and 900 degrees Fahrenheit, and then place in the molten lead, which should be at a temperature between 1350 and 1400 degrees. When the spring is placed in the lead it will float to the top, for lead has a specific gravity greater than steel; therefore, it will be necessary to hold the spring under the lead with tongs, the ends of the spring being heated to secure the proper temperature throughout. When the required temperature is reached, remove and dip it in the oil bath as described in Chapter VII. When cool, remove and place in a bath of potassium nitrate (saltpeter) heated between 700 and 725 degrees. A low-reading pyrometer should be used to keep the bath at this temperature, or better still a high-grade mercury thermometer having a range above 750 degrees Fahrenheit. With a thermometer of this kind the bath may be always controlled and kept at the correct temperature. Allow the spring to remain submerged between ten and fifteen minutes or even longer—altho ten minutes is usually sufficient.

If the beginner is unable to employ such elaborate equipment, I would suggest the "stick method" for both purposes; heating of the potassium nitrate and testing for the proper temper. This consists of judging by the "feel" or appearance of a wooden stick on the surface of a spring. This is a crude method, but in experienced hands is very reliable. The first indication is the greasy feeling of the stick as the temperature of the spring increases, owing to its greater heat. The first sign of this feeling occurs when the temperature has reached about 575 degrees. After the smoke, a spark may be obtained with hard rubbing, and as the heat increases, numerous sparks are obtained with light rubbing. The next definite indication is the "flare" of the stick which occurs at about 795 degrees. At this point the steel has just reached luminosity, as judged in absence of external light. The "stick" employed is usually an old hammer handle of either ash or hickory, shaved down to a flat edge. You may use softer woods such as birch or hazel, but these are not as good as the former. The charred point of the wood is used continually. It should be noted that resinous woods are not suitable for gauging such temperatures. After you become accustomed to gauging heat in this manner, you can judge the rate of heat within 50 degrees Fahrenheit, which is a practical working range when tempering springs. The temperature of the potassium nitrate bath may also be judged by this method.

After the spring is carried through the above-mentioned operations, it is ready to be polished. Before any polishing is done, examine the spring thoroughly with a magnifying glass to detect any flaws. Cracks of a circular form on the corners or edges of the spring indicate uneven heating in hardening. Cracks of a vertical nature and dark-colored fissures indicate that the steel has been burned and should be scrapped and a new spring made. Springs which have hard and soft places have been either unevenly heated, unevenly cooled,

or "soaked"—a term used to indicate prolonged heating. A spring not thoroughly moved about in the hardening bath will show hard and soft places, and have a tendency to crack. Springs which are hardened by simply dropping them to the bottom of the oil tank sometimes have soft places, owing to contact with the bottom or sides of the tank. They should be thoroughly quenched, before dropping, by moving them back and forth in the oil. If a spring appears soft and will not harden, it has probably been decarbonized on the surface by too much heat or by soaking it too long. The surface must be removed before the spring will harden properly, but this can not be done with some springs after thickness has been established. Sometimes springs are soft because the cooling bath is not large enough. I refer to those who try to harden a spring in a can cover and expect to see good results.

When the spring is perfect in every respect you may polish it to a high finish and place it under test. For this operation refer to Chapter XV. This is an important factor in governing its life, for if it is not tested it is likely that inherent defects will not be detected. If overtested, a crippled effect is produced which is equivalent to several years' use. The proper method is first to measure the spring with a micrometer and place it under an arbor press, using suitable steel blocks which have been hardened and the surfaces oiled so that the spring will ride free when pressure is applied. Bring the ram down and compress the spring to its full compression; repeat from eight to twelve times and then check with the measurement previously made. A well tempered spring should not lose any compression except the normal set, which should not be more than 0.01. If the beginner does not have an arbor press with which to do such testing, the bench vise may be used instead.

A spring made according to the methods outlined should last the life of the arm; it should even stay compressed when not in use and hold its elasticity. The test will show that the spring is practically constant and independent whether compressed or uncompressed. There is such a variety of flat springs used in firearms that it would be difficult to describe all the shapes and sizes. All such springs must be hand-forged and given the treatments described.

Helical Springs — Altho these are often called "spiral springs," the proper term is "helical," denoting a spring which shortens in action. There are several methods used to coil wire for springs, but the most successful is by means of a lathe with suitable arbors and one small hole drilled through it to hold the wire during the winding operation. These in turn are fastened in the lathe chuck. Wind it on the mandrel while a tool is used in the tool post. This tool has two rollers fastened to the side of the holder. The coil of the spring is determined by the pitch of the number of threads per inch, and for the size music wire used. A tool of this nature is generally used with heavy wire, and if employed on either heavy or light wire, an even and well-formed spring is the result.

A quick method is to anneal an old flat mill file measuring either 6 or 8 inches and drill a series of holes, small in diameter, such as Figure 124 illustrates. The end of the spring wire is inserted in the drilled hole and at the same time into one of the holes of the winder or mandrel. If such a tool is used on top of the mandrel with the wire running through one of the holes to determine the space required between the spring coils, a true and even spring will be formed.

Let us assume that you wish to make a coil spring to go into a $\frac{3}{8}$-inch hole; the size of music wire used is 0.045 inch. The double diameter of the wire would be 0.090 inch; because of expansion when the wire is released, you must deduct $\frac{1}{16}$ inch and an additional 0.01 inch so that the spring will be free in the hole. On the other hand, if you should wish the same spring to be free on a spindle or shaft which measures $\frac{3}{8}$ inch, you would use a piece of $\frac{5}{16}$-inch drill rod for the mandrel. This rule only applies when the spring winder, which fits into the tool post, is used; the proper friction may be had to keep the wire tightly wound with all possible tension.

If a long spring is required, a mandrel of a corresponding length is used with a center placed in one end and the dead center in the tail stock used for a support. When a very small mandrel is used, the end of it is supported between the jaws of the drill chuck placed in the tail stock. The wire is placed in a boring-tool holder or a V-holder in the tool post. A piece of brass about $\frac{1}{8}$ x $\frac{1}{2}$ x 3 inches is placed between the wire and tool-post screw and a V-shaped groove is filed in the brass to hold the wire in place. The groove is filed lengthwise in the brass plate and is made of the proper depth for the size of wire to be used. This clamping arrangement is tightened with the tool-post wrench, just enough tension being applied on the wrench to keep the wire from slipping.

There are several simple methods of winding wire for springs. One of these is to clamp a rod or bolt in the vise and wind the wire around it by hand. This is a very unsatisfactory method, however, for it is rather difficult to wind the wire evenly and with the proper tension.

A very simple hand tool for winding springs can be made. A piece of $\frac{1}{16}$-inch flat metal is filed

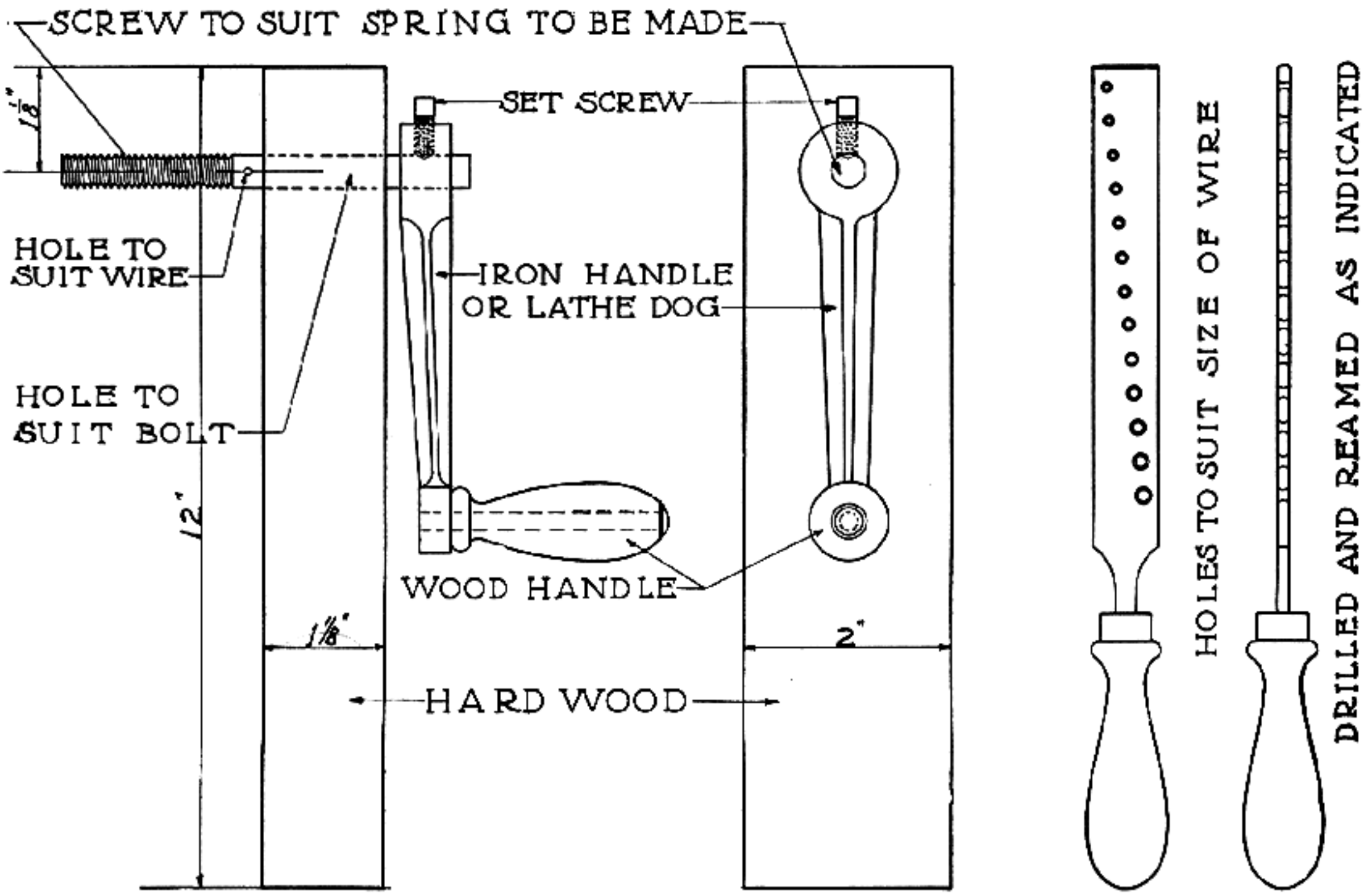

Fig. 124
Spring winding tools

out, and on the left-hand side this tool is made to clasp the rod on which the wire is being formed. This is a handy tool and in the same class as the drilled file used for forming an evenly spaced spring. With such a tool, long coil springs can be wound.

Another method of making a spring of an even coil is to hold a long threaded bolt in the vise. First, drill a small hole in the end of the bolt and then screw on the nut to such a distance that the hooked tool can be placed over the bolt. Place the wire in the hole, and with the tool in place, screw up on the nut, allowing it to follow the thread on the bolt. When enough is wound, file off the end of the wire in the hole and release the spring, which can be screwed off the bolt. Springs of almost any coil, but not of "almost any diameter," may be made in this way.

In the absence of a lathe, a wire-winding tool can be made either by bending a rod into the form of a crank or by using bolts or lag screws with a handle, or a lathe dog fastened to one end. Insert these into a piece of hard wood as shown in Figure 124. This can be held in the vise or fastened to the bench by two or three screws in convenient places. A hole is drilled into the end of the rod or bolt and in this hole the wire is placed and wound toward the crank. Of course, the spring can be made no longer than this projecting end. To make different-sized springs, different-sized rods or screws must be used, and holes to fit must be made through the piece of wood.

A tool of this kind will prove more serviceable and at the same time look like something. Providing you expect to have much of this work to do, you may procure a casting similar to the tail stock to a lathe and put in a hole where the movable spindle is placed. A similar spindle, but with the end where the wire is to be wound, is large enough to form a shoulder to keep it in place. On the other end place a wheel 8 or 10 inches in diameter. A steering wheel from an automobile will answer, if a handle is provided to turn it with.

The end where the shoulder is may be made with a screw to fit a drill-press chuck, and this can be used for various purposes. The spindles may also be in the chuck. Such a tool can be fastened to the bench, and if more elaborate extensions are wished, a small motor and pulley may be connected. This tool would be a very convenient one with which to lap shotgun barrels at the muzzle. It can also be used for reaming holes, and in emergency for drilling purposes. As a tool for holding taps to tap threads in holes it has no equal—the work is

held in the left hand and the wheel turned with the right.

The flat springs used in cheap revolvers and arms, which do not require much tension, can be made from the sheet spring steel. Always cut the strip of sheet spring steel in the direction of the grain, which is lengthwise, for the grain of the steel must not be across the spring. After the spring is cut to shape, grind down to size, or taper-grind it, for on all the cheap revolvers the operating end must be a taper and the stationary end which fastens in the frame must be heavy. When finished to correct width and taper, heat it and place the required bends in the proper places, then harden and temper as described.

The straight tapered springs used on Colt and Smith & Wesson revolvers are very simple to make, as the ends have a slot for the hammer stirrup. After the spring is slotted, heat the end and form it over a piece of drill rod fastened in the vise. When formed to the correct shape, harden and temper.

The student may not be able to secure the fine British steel, nor perhaps any suitable spring steel, through his local source of supply. Let us suppose that he must have a spring in a hurry, say for a Ballard rifle. Since this is rather a large spring it must be made as nearly correct as possible and at the same time it must be very resilient. The best steel to use in such an emergency would be from an old automobile spring. Anneal one of the leaves by placing 6 or 8 inches of the spring in a pipe and closing both ends. Pack lime all around the spring, heat to about 1400 degrees Fahrenheit, and allow to remain at this heat for one hour. Then let the furnace or forge cool off with the pipe and its contents therein, which will require from four to six hours. When the piece is thoroughly annealed, saw lengthwise a piece of the bar long enough for the intended spring. Forge it to shape, allowing enough for finishing, as instructed in the first part of the chapter. If you are doing this work on a regular forge, using bituminous coal, make sure that you have freed the fire of sulfur and only use coke which has been prepared as described in Chapter XIX, Volume I. Complete the spring according to the sample and fit it well into the slot with the correct taper from lug to contact point on the hammer end. It is now ready to harden.

The taper is an essential element in making a good spring for a firearm. When a spring is compressed and has the gradual taper, it must be constant from the large end to the smallest thickness. This tends to give a spring a gradual freedom of elasticity and a greater range of compression. The weakening of a spring due to an uneven taper is obviously a very serious factor and one of the prime causes of failure in most springs made for firearms; which points to the possibilities of unequal stress set up in steel structure, regardless of the correct forging, hardening, and tempering. If you will examine a number of broken springs which have been removed from firearms, you will find nearly all causes of fractures about the same—improper heating, uneven taper, or improper hardening and tempering. The last cause is the most common.

If I were to extend this chapter any further it would be necessary to carry it into technicalities involving a number of experiments to determine different points, such as stress and strain, development of formulæ for deflection, practical consideration of the theoretical aspect, remarks on spring steel, etc. This study alone would require a good deal of time and would fill several chapters; but for the average student this would be of no value.

Remember that to obtain good results when making springs, it is necessary to have the means of heating the steel uniformly and to the proper temperature. Forging should be done according to the correct method and cooled at the required degree. The medium of oil should be employed, and the temperature and heat kept reasonably constant.

It is well for either the amateur or professional, when making springs, to discard such old ideas as "burning oil" off a hardened spring, and instead apply the modern and more practical method. If this were practised more, much spring trouble would be eliminated. Perhaps you deem it difficult to give up practises clung to so tenaciously these past two hundred years, but modern methods demand flexibility.

CHAPTER XXII

Bullet Swages and Case-resizing Dies

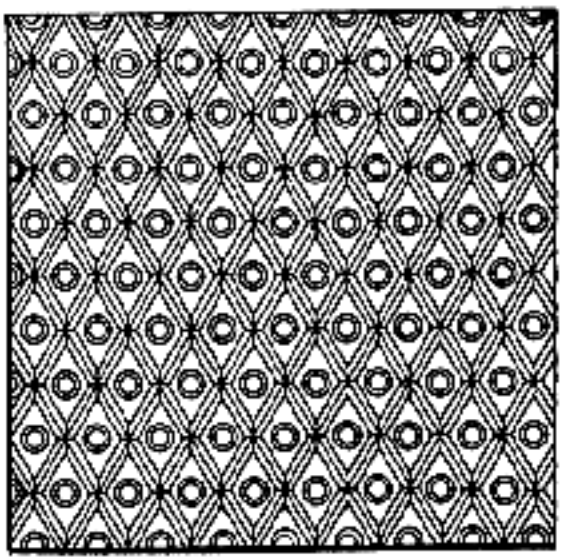

CHAPTER XXII

Bullet Swages and Case-resizing Dies

IN THE lean years such as we are experiencing during this world-wide depression, it becomes a necessity to economise at every turn; the loading of ammunition is a means of reducing expenses to fit the times. The hand-loading of one's own ammunition is a source of great enjoyment, and those who have a small shop where it is possible to make their own reloading tools, as described in this chapter, are in a fortunate position. They can not only make loading tools but bullet swages and bullet moulds.

It is surprizing to see the ingenuity shown by men who construct their own reloading tools. A man whom I know made one from a bottle capper; it cost him the sum of $1.35. He was able to load not only one caliber of cartridge, but many, starting from the Hornet and ending with the 45-70. We can not consider points of extreme precision with a tool of this nature, but when we draw aside the curtain and analyze Captain Woody's information, we can not help but understand that he has striven for accuracy, eliminating every cause that would tend to make bad groups on the target. We can also see from the information given that he has accomplished the results he has striven for in the complete construction of his dies; those who have a small lathe in their home workshop can achieve the same results. After a start is made you will construct not only one straight-line tool for a certain caliber of cartridge, but many, or at least enough for the number you may have on hand.

For the major portion of the ensuing material in this chapter I am deeply indebted to Captain G. A. Woody. Captain Woody has needed no introduction since the development of the .22-caliber Hornet cartridge.

Resizing Dies — Getting a bullet started right is one of the secrets of good accuracy. A good bullet—one which has its rotational center of gravity directly within its axis—can be made to shoot inaccurately by canting it in the neck of the case. In this canted position it gets started incorrectly, and the upset it is forced to take leaves it distorted, resulting in an inaccurate flight.

To be assured that the bullet will at least get the benefit of a good start, the neck resizing die must be accurate. By all means, a full-size resizing die should be used, as this arrangement alone insures that the neck will be concentric with the body, especially that portion of the body just in front of the head or rim. It is this portion of the body which should, in accurately-made chambers, support the case and line the bullet up with its seat. Obviously, if the neck and the rear portion of the body are not in line, the bullet will be canted in its seat, and inaccuracy will result. All cases which are to be reloaded should be resized, especially at the neck. In no case should a chamber be made in which the neck is so tight that the cartridge neck after being fired will be small enough to hold a bullet. This is one of the surest ways to assure inaccuracy. It is seldom that a cartridge case has a neck which is exactly the same thickness all around. Such a case, fitting into a chamber the neck of which holds the case too snugly, will surely start the bullet incorrectly. In addition to this, there is always the danger of excessive pressure arising from too-tight chambers.

With this explanation, it is seen how necessary it is to have the neck concentric with the body; this can be obtained only through the use of a full-length resizing die. This should not be construed to mean that the full length of the body should be resized, but that the die should fit the full length and resize the neck. A full-length resizing die is simple in construction. All that is required is a piece of steel sufficiently long to take the case. Its diameter should be large enough to give it some weight, since the operator will often find it convenient to hold the die in one hand and strike the knock-out pin with a hammer. A good heavy die works very nicely this way.

Before proceeding to worry much about the die, one should provide himself with a reamer of proper size. He will find that the dimensions of a fired case, excepting the neck, will be just about what he wants if he is to fire the resized cases in the same gun from which he has taken the fired case. There is no advantage in unduly resizing a case if the same gun is to be used with his reloads. Having selected a good sample of fired case, he should use it as a guide from which to make his reamer. A reamer for this job is easily made by turning down

a piece of drill rod to the exact dimensions of the fired case minus about .003 inch at each point. This is necessary because a reamer of the type he will make will cut one to two thousandths large. The neck of the steel plug or reamer blank should be about .005 inch smaller than the diameter of the neck of an unfired case with the bullet inserted and should be at least .050 inch longer than the longest neck of a case you are able to find. Always make the reamer small in diameter, since the die can be lapped out if the first trial indicates it to be too small. Leave enough on the forward end for a pilot which should have a diameter about .005 inch—or more—smaller than the neck diameter. Select a diameter which will enter a hole drilled with a convenient-sized drill which you may have or be able to get. Use care to see that the length of the neck section is sufficiently long to keep the end of the case from buckling or becoming closed in. The rear end of the reamer blank should be turned to a size to fit a convenient chuck.

Having gotten the blank finished to size and smoothed down, it should be caught in a vise and slabbed off to one-half its former thickness from a point just in the rear of the pilot to a point in the rear of the section which would form the body adjacent to the head. If a good grinder is available, this slabbing off can be done after hardening, and it is preferable in all cases to leave a little thickness to be stoned down after hardening. Such points on the reamer as the cone and front of the neck should be given a slight clearance. In fact, this type of reamer should always be given a slight clearance just back of the cutting edge, and this clearance should increase as the cutting edges approach the nature of leading edges, as in the case of cones and crosswise cutting edges as in the end forming the neck. It is necessary to carry this clearance all the way around to the opposite side.

You are now ready to proceed with the die proper, and having selected a suitable piece of low-carbon steel, chuck it up and face off the end. Center drill and then drill completely through with a drill somewhat smaller than the one you have selected for your reamer pilot size. Follow this with the finishing drill, which should be about .001 inch larger than the pilot you have provided on the reamer. Without moving the piece from the chuck, insert the reamer and proceed to enlarge the drilled hole. Use a slow speed and plenty of oil. You need a smoother finish. Ream to a depth which you have gauged to be satisfactory. Remove the die, and after relieving the sharp edge, try forcing in a fired case—with a vise. Having forced the case out, analyze the results by measuring the salient points on it as compared with an unfired case. Try inserting a bullet in the neck. If the bullet fits too tight, you are all right so far. Now, try the case in your gun, noting if there is any binding anywhere, especially in length. If there is no binding, you are still all right. Watch the length to see that you have not unduly shortened the case. A very nice way to determine the length is to try several cases in the die pushed in to various distances. For instance, if you allow the head to extend away .050 inch from its seat on the die, and the shell fails to seat in the rifle by .050 inch, you are a little too deep; that is, you have no clearance at the shoulder and should face the die off about .003 inch for clearance. The same analysis will indicate when the die is not deep enough by allowing the case to enter the chamber to a point less than .050 inch minus the .003-inch clearance. In this case, the die should be reamed slightly deeper.

After you have measured the resized case and compared it with an unfired case and pondered over it for some time, decide whether or not you can afford to do much lapping on the interior, and if so, how much. If the neck or any other part of the body needs lapping, a stick to about the proper size and driven into the die and then removed will give very good results. When the stick is removed, trim down the section you do not want disturbed, and with valve-grinding compound lap out the surfaces you want increased. Try the die several times until you get exactly what you want. If you find that the reamer has cut too large, the only thing left is to stone it down at the large portions and start over again. Remember not to decrease your case too much. The neck should not be so small that undue pressure is necessary to insert the bullet. An unsightly bulge at the neck after the bullet is seated is unnecessary and a detriment to accuracy, since you will note that when the bullet expands the case it will invariably go in unevenly. Just enough pressure to hold the bullet in securely is sufficient.

After you have gotten the proper size of case, it is well to case-harden the interior of the die. An effective way of doing this is to heat it up to a good red and insert into its interior a small piece of sodium cyanid. Remember that sodium cyanid is poisonous and should be handled accordingly. Allow the piece to remain so heated a few minutes and quench in water. The inside will have a thin but hard surface, and a slight lapping will make it smooth. A knock-out pin should be provided. This is simple, yet many do not think of the effectiveness of providing a decapper with the knock-out pin. This can be arranged by selecting a short rod which fits loosely in the mouth of the case and shouldering down one end, leaving a tip the diameter of which will enter the primer vent and be of sufficient length

to decap the primer. In using such a rod to knock out the case, the primer is detached at the same time the cone is knocked out of the die, making two operations in one. Figure 125 shows a resizing die and knock-out pin as described above.

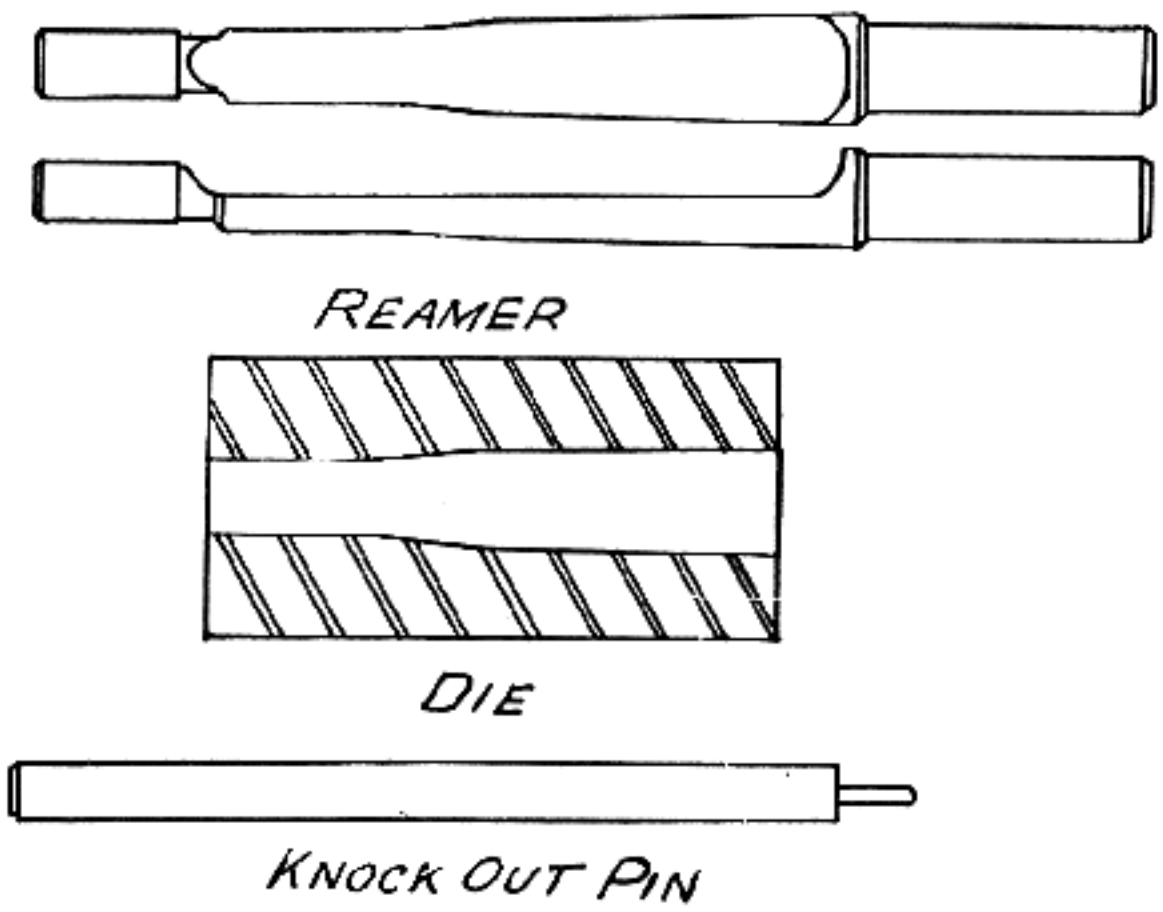

Fig. 125
Swedging die. Reamers used for making die. Half reamers may be used as expedient when only one die is required

To use this full-length resizing die, first wipe off the exterior of the cases that are to be resized with a slightly oily rag, so as to have just a very thin smear of oil on the case. If a heavy coating of oil be on the case, it will be distorted. Place the case in the body of the die. Have a large vise with brass jaw covers. Place the die with the case in it in the vise, and close the vise up until the head of the case is just even and flush with the head of the die. Then remove the die from the vise, and holding it in the left hand, insert the knock-out pin in the mouth of the die, and with a hammer knock the case out of the die. This will remove the case from the die and also remove the fired primer from the case. Before driving the case out, be sure that the primer decapping pin has entered the flash hole in the case.

Bullet Swages — Making one's own bullets, to a few, is a very interesting pastime. There is something about the game, when once you have mastered it, that is hard to get away from; one finds himself making bullets of various components and getting from this a wonderful picture of the action of bullets.

Before undertaking the manufacture of a bullet swage, one should know that he is capable of fine and accurate tool work and should have a good knowledge of the behavior of metal when being drawn. It is useless to attempt to make bullets with a swage that is not accurate and capable of maintaining its accuracy. There are bullets and bullets—not all shoot accurately.

One of the most important features of a bullet is that its center of gravity be exactly in line with its center of rotation. This fact is more obvious when it is considered that the rotational speed of a modern .30-caliber bullet is approximately 200,000 R. P. M. At this rotational speed, it is readily seen what will happen if the bullet is in the least out of rotational balance. It is impossible to attain any degree of accuracy with an unbalanced bullet.

Our modern method of manufacturing bullets is simply to have a die with a recess in it the shape of the bullet. That portion of the die which forms the point of the bullet is drilled, reamed, and lapped to take a push-out pin, which is recessed on one end to form the extreme point of the bullet. The operation consists of forcing—with a punch—a bullet jacket and core into the die by the aid of a crank press, the return stroke of which pushes out the bullet by the aid of the push-out pin. To design a die following out this principle is simple enough, yet the maintenance of the push-out pin when making long pointed bullets is difficult. For this reason, commercial manufacturers dislike undertaking soft-point, long pointed bullets.

One simple yet effective design of bullet die is shown in Figure 126. It should be noted that the die is supported at the junction of the body of the bullet and its point. The base which forms the point is inserted into the main body of the die, and

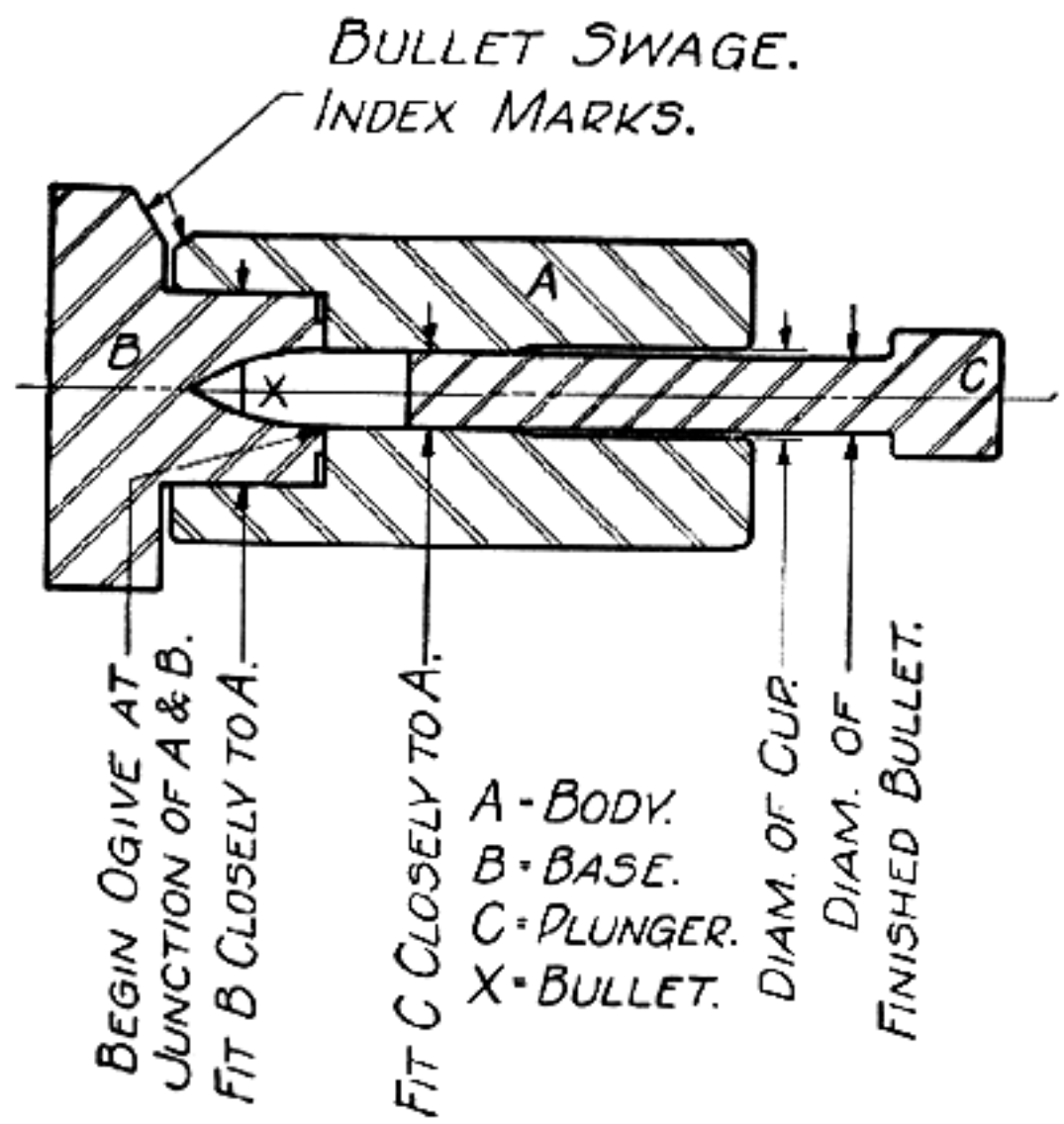

Fig. 126
Bullet swedging die

in this position a jacket and core are swaged to shape. To remove the bullet, the base is pulled out of its recess, and the bullet is forced out by pressure on the punch in the same direction that the bullet was swaged. A swage so designed must be made accurately or it is useless, yet when made accurately it is much more easily maintained than one with a push-out pin.

For a bullet the size of a .22 caliber, the first consideration is to provide a reamer of the shape you desire. While practically any shape can be used, it is best not to select one of a radius greater than five calibers. That is to say, the arc of the bullet point should not have a radius greater than five diameters of the bullet. It has been thoroughly demonstrated that long-pointed bullets have a greater sustained velocity than blunt-pointed bullets, and that they strike higher on a 200-meter target. Obviously, this phenomenon can be partially attributed to other conditions, such as jump; yet, all in all, the long point produces a flatter trajectory even at short ranges. This statement can be verified by taking a blunt .22-caliber Velo Dog bullet and reversing it to a long-pointed bullet in a swage which will be hereafter described. The results will be astonishing.

Proceeding with the reamer and having determined the point and diameter, which should be about .002 inch smaller than the finished diameter of the bullet you have determined upon, slab off one side to almost one-half the thickness of the reamer to a length not greater than the length of the bullet. Be sure that the section in the rear of the cutting edge will run free in the hole produced. This section should not be larger than the diameter of the cutting edge nor very much smaller, as it will subsequently act as a guide for the cutting edge, keeping it straight and preventing it from digging in. Having slabbed off one side, be sure that the cutting edge is backed off slightly and that the extreme point will be free to cut. If the slabbing operation does not go to the exact center, the reamer will bind, and if it is cut beyond the exact center, it will leave a small projection at the point. The latter, however, is a better condition than the former. The reamer should be shouldered back to a length of 2 or 3 inches, depending on the length of the bullet you are to swage. See Figure 125 for a reamer used for this purpose. Harden and draw the reamer, leaving it sufficiently hard at the cutting edge.

For a caliber .22 bullet, select a piece of tool steel about 1.125 inch diameter and 1.750 inch long and chuck it up. Face off one end and center drill. Drill through the entire length with a drill a few thousandths smaller than the reamer. Now replace the drill with the reamer, and with plenty of oil and slow speed, proceed to ream through the entire length of the blank. With the blank still chucked, counterbore the end with a diameter of about ⅝ inch to a depth of perhaps ½ inch, leaving a good radius at the bottom of the counterbore. Be sure that the counterbore is a perfectly cylindrical cut at least not greater in diameter at the bottom than at the outer edge. Break down the sharp edge of the counterbore. Now remove the blank and again catch it in the reversed position in the chuck. Face off the end and break down the edge of the bored hole. The hole on this end must be slightly enlarged to a depth leaving a length of the original reamed hole equal to the length of the cylindrical section of the bullet plus about ¼ inch. This enlargement is necessary in order to get the bullet started, but it should not be more than .010 inch larger than the finished bullet. Having completed this operation, it is well to force a lead slug through the die to see that it is neither too small nor too large. It should be about .001 inch smaller than the finished bullet. On one side adjacent to the counterbore, file off a small angular cut; across this, file a line which will later be used as an index to line up your base. You are now ready to harden this portion of the swage. Hardening a thick, hollow cylinder is quite an art. If it is immersed in the cooling medium, it is liable to shrink in the diameter of the hole through it. The best way is to have a jet of water flowing upward through a tank, and by placing the heated die over the jet, the interior surface will harden almost as soon as the outer surface, leaving the hole about the same diameter as it was before hardening. It should be drawn to a light straw color with the counterbored section slightly deeper.

After the die is hardened, it should be lapped out to the desired diameter. A metal lap is perhaps the best, as the hole should be a perfect cylinder at the section which forms the body of the bullet. The desired diameter is best determined by forcing through the lapped hole a bullet of the type you intend to make. Lap out the counterbore slightly. After this operation you are ready to proceed with the base.

The base should be of tool steel. The first operation is to chuck up a piece of steel about ¼ inch larger in diameter than the body of the swage. Shoulder back a section to a length equal to the depth of the counterbore of the body plus about .050 inch. Leave a good radius at the corner. Make the diameter a force-fit to the counterbore. This operation requires very close fitting; a nice smooth-cut file will serve very well. The accuracy you will get with the swage depends a great deal on

how accurately you fit the base to the body. Before you remove the base from your chuck, remove a portion of the metal which your reamer will later remove to form the point. This can best be accomplished by drilling in with a center drill. Do not go beyond a point where your reamer will not clean up. The small point is what you should remove, since a reamer of the type you have made usually does not cut well on the point. Don't go too deep. Make a line on the base to coincide with the line on the body.

You can now remove the base and gently force it into the body, but be careful that you do not break the body in doing so. Have the two index lines pointing to each other. If the two pieces are too tight, and there is danger of breaking the body, drive the base out with a soft rod and dress it down slightly at the points where it bears hardest. The base can best be seated by tapping it slightly with a light hammer. When it is seated, be sure that it is seated close to the bottom of the counterbore. It is best always to shoulder back the end of the base about .020 inch, leaving a small rim $\frac{1}{16}$ inch wide around the edge of the hole so that the two edges of the base and body come together firmly. Having seated the base firmly in the body, and the two index lines coinciding, you can now proceed to ream the base to the limit you desire. It is best to lay out your bullet beforehand on a 10-to-1 scale and determine just where you want your junction line. Drive out your base and measure the depth you have gone and try again until you have gotten the right depth. Always keep the counterbore free of chips. You should have no difficulty holding the base and body together while reaming, as the force-fit should be sufficient to keep them together. Always keep the index lines together. Reaming is best accomplished by using a hand drill and holding the body and base in one hand while you operate the drill with your other.

Having completed the reaming, you can now proceed to harden the base. The section forming the point of the bullet should be drawn to a light straw color; the base proper can be drawn much darker. Provide yourself with a stick with a point shaped like the bullet and lightly lap out the bullet recess. Do not round off the edges too much. Fit the base again to the body by dressing it down with a piece of fine emery cloth. Never try to fit the two by running them together with an abrasive. The two pieces will probably fit together after the black from the heat is taken off. Be careful not to take off too much and thus make the parts sloppy. Do everything you can to keep the recess in the base in line with the hole of the body. With a small hardened rod which just fits the hole in the body by a slide fit—the rod to have a perfectly flat end at right angles to the axis—proceed to force the components of a bullet into the assembled swage. Tap the base until you can remove it, then force out the bullet. If there is a slight burr thrown up all around the bullet, you have done well. You can now lap out the bullet seat again and try another bullet. If you have been accurate in your work, you will have a bullet with only a slight ring showing at the junction point. Even a ring .001 inch greater than the bullet diameter at this point does not seem to hurt. Bullets made from such a swage as above described have given an extreme spread of not more than $2\frac{1}{2}$ inches at 200 meters. The essential features are that the bullets should have a flat base—not canted—a point that is concentric to the base, and not too short a bearing surface.

When once the body is made, various bases can be used with it to give you many variously shaped bullets.

This bullet swage is used by assembling the base *B* with the body *A*, bringing the index marks on each to coincide, and using care that the base and body are snugly together. Then insert the assembled components of the bullet in the rear hole in the body, followed by plunger *C*. Then, holding the swage so assembled, place it in vise or arbor press and close the vise or press with a firm, heavy pressure, which will form the bullet perfectly to the die. A little experience will show how much pressure to use. Then remove the swage from vise or press, remove the base, and force the bullet out forward with the plunger.

Such a swage may be used to resize a jacketed bullet which is slightly under or over size, such as reforming a .30-30 bullet that measures .306 inch so as to give a different form and a diameter of .308 inch, or to resize .311 bullets down to .3085 inch. Or in certain cases it may be used to make complete jacketed bullets. For example, take the 45-grain .22 Hornet bullet. Cartridge cases for the .22-short rim-fire cartridge can be obtained before they have been headed; they make excellent jackets. A lead core weighing 40 grains and small enough in diameter to enter the .22-short case can be used, or the ordinary .22-long rifle bullet sized down so that it will enter the case may be used for the core. This lead core must fit very snugly into the .22-short case which is to become the jacket of the bullet; otherwise the jacket will be corrugated in the die. Assemble the core and case (jacket), swage up, and there will result an excellent soft-point bullet.

CHAPTER XXIII

Bullet Moulds

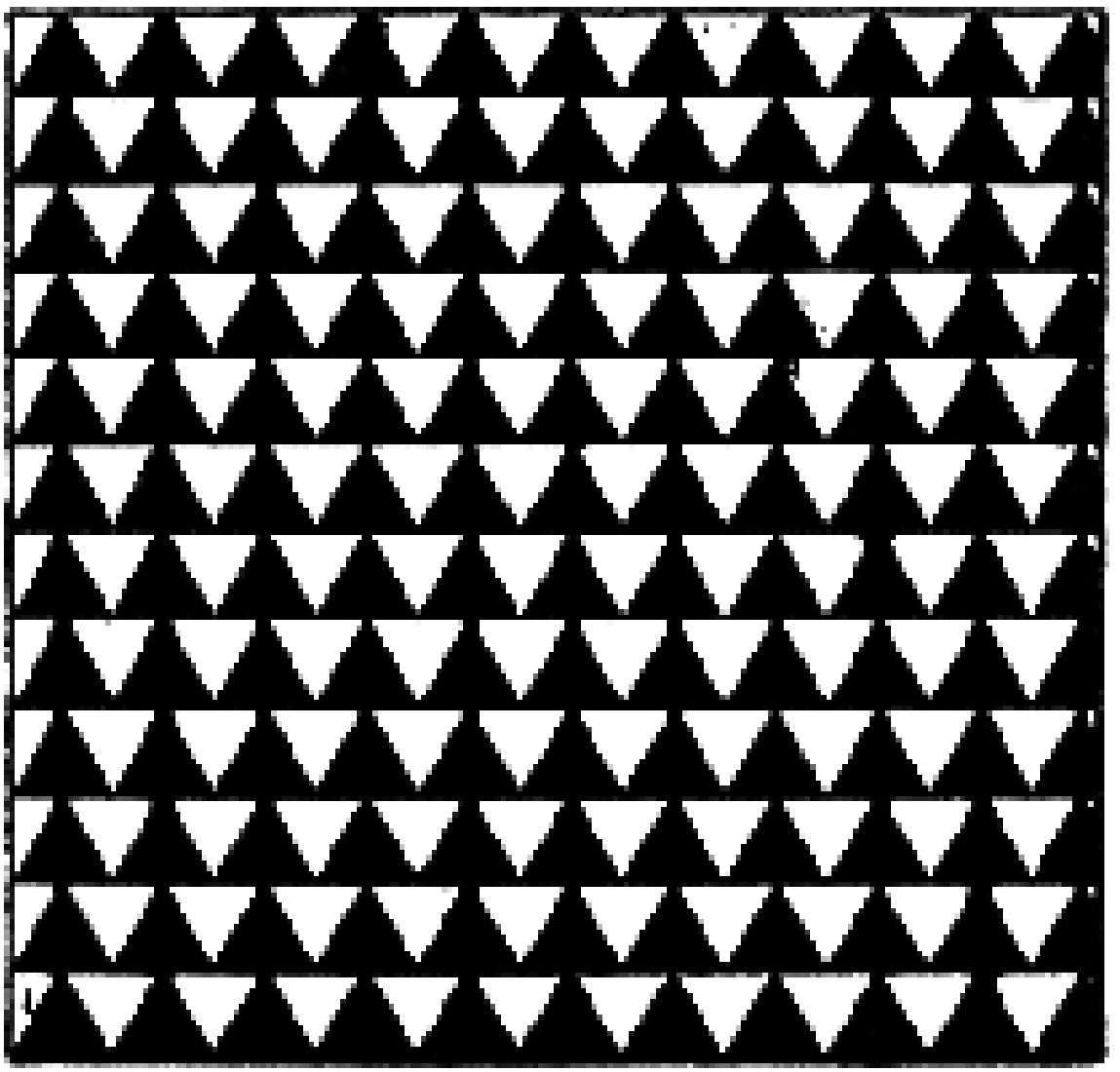

CHAPTER XXIII

Bullet Moulds

BULLET moulds will be of interest, not to those who can purchase them ready-made from the manufacturers, but to the man who experiments with different forms of bullets. The necessary equipment to make the mould and cherries consists of a lathe, a milling machine, and a drill press; the lathe to turn the cherries, etc.; the milling machine to cut the flutes in the cherries and to form the mould blanks; and the drill press to cut the impression in the moulds with the finished cherries. All the operations require a certain degree of knowledge pertaining to tool making so that all the work will be done with precision and so that when the moulds are completely perfected good results will be the reward on the target. It will be an easy matter for you to make all such tools without very detailed instruction, providing you use extraordinary care in the construction of the cherries.

I always found great pleasure in going over some of the old tools in the loft of the small-arms department at the Frankford Arsenal. There were a number of old cherries, bullet moulds, tools and gauges, dating from the Civil War period to the present time. My chief interest centered on some of the old cherries made from time to time for different bullets, particularly on the accurate way the flutes were cut. Most of these had been cut by hand with a file after the flutes were gashed with a milling-machine cutter and were spaced very accurately. See Figure 127. This was the first method used after the cutter was formed ready to be fluted. The gashing of the teeth was done in a milling machine by catching the cherry in the dividing head chuck and indexing the head to the number of required flutes. Each time this was done, the cutter was brought against the top of the cherry to make the impression for the location of the flute.

The small-arms department made all the shrapnel balls for the shell shop; these were turned out on a special shrapnel ball machine with two half-dies which came together, forming a true sphere. This machine had a number of these dies set in a row, and as the lead wire was fed through from a roll at the back of the machine, an automatic feed carried the wire a certain distance directly over the dies; when the two halves came together a ball was formed. Figure 128 will show the reader how these dies were made. Altho you may never have occasion to use them, you may be able to apply the idea to other work. Different-sized balls required different-diameter cherries, and these were in cabinets and also boxes in the loft, never to be used again, as shrapnel is an obsolete item on the list, the high explosive shells replacing these in modern warfare.

You will find very little use for the round balls today, as these are also on the list of obsolete bullets, except for muzzle-loading rifles and in shotguns for deer in certain States. The shotgun spherical balls may be secured from the ammunition companies already loaded in the shells, but for the old muzzle loaders or flint-lock arms you must make new ones. Their usefulness has passed, and they are in the discard, more or less; however, it is well worth knowing how they were made.

Ball Cherry — The term "cherry" applies to the ball-reamer used to make the mould for a spherical ball or bullet; so named, no doubt, after the fruit. This is an old term; in fact, I have seen mention of it in a book printed in 1814. To the average mechanic nor anyone not familiar with this process, to produce that perfect sphere in metal in the form of a solid steel ball seems a very difficult operation. It is very simple, however. The majority of tool makers would make a templet and turn and file one to form. This may be perfectly satisfactory for the average job, but when a perfect sphere is required, it is just as easy and simple and does not require any more time than the templet. It only requires a little instruction to make one of the correct size to any given diameter, and for any caliber of rifle or gauge of shotgun.

The first stage of the work is to make a forming tool to fasten in the tool-post holder of the lathe. As an illustration, suppose we wish to make a cherry 0.500 inch in diameter, which when finished will cut a true spherical hole. Take a piece of steel between $5/16$ inch and $3/8$ inch in thickness which can be fastened to a suitable holder. When set in the tool-post holder in the lathe it must come on the exact center. A piece of an old file of good quality of the above given thickness, properly annealed and the teeth ground away, may answer the

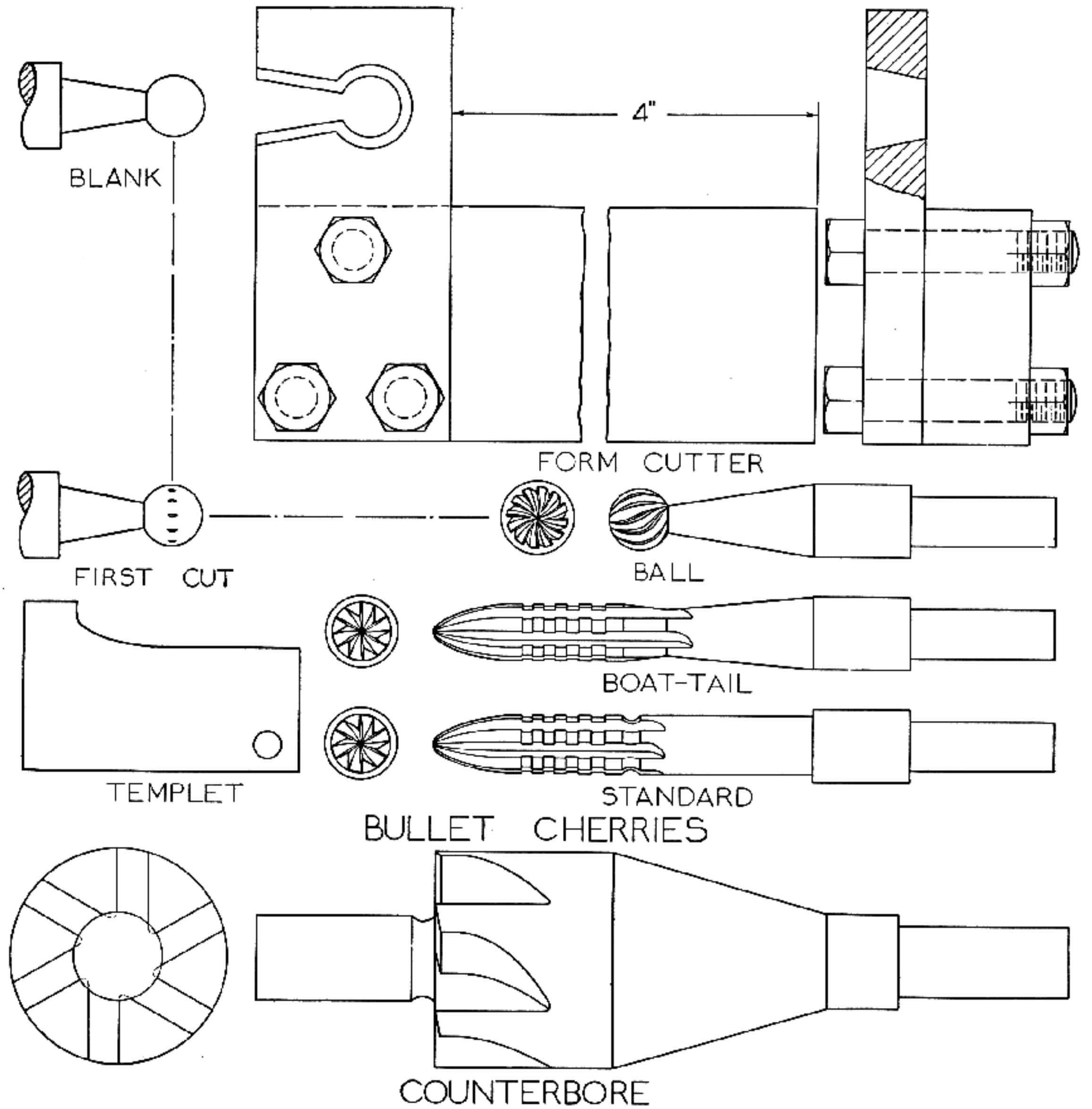

Fig. 127
Bullet-mould cherries. Mould counterbore and form tool for cherry

purpose. It should be annealed to as soft a degree as possible. A piece of non-shrinkable steel such as "Paragon" or "Ketos" is preferable. Drill a hole near one end, but a little smaller than the given diameter. With a No. 8 or No. 9 taper-pin reamer, ream the hole until the cutting edge measures 0.501 inch, which is 0.001 over the desired size to allow for the finishing and stoning operation, and which will bring out a ball to measure exactly 0.500 inch.

The advantage of using the taper-pin reamer is that the hole is made perfectly round, and at the same time the taper of the reamer gives an angle to the hole allowing for clearance and a good, strong, effective cutting edge. With a file, cut out a portion of the tool to a V shape, and at the same time file back the clearance the same as the reamed tapered hole. Figure 127 illustrates the forming tool and work produced from same. The V may be cut either on the side or on the end, and it is then possible to center it much better. When it is completed, harden and temper for use.

For the cherry, turn a piece of steel in the lathe ⅝ inch in diameter. "Stentor," an oil-hardened

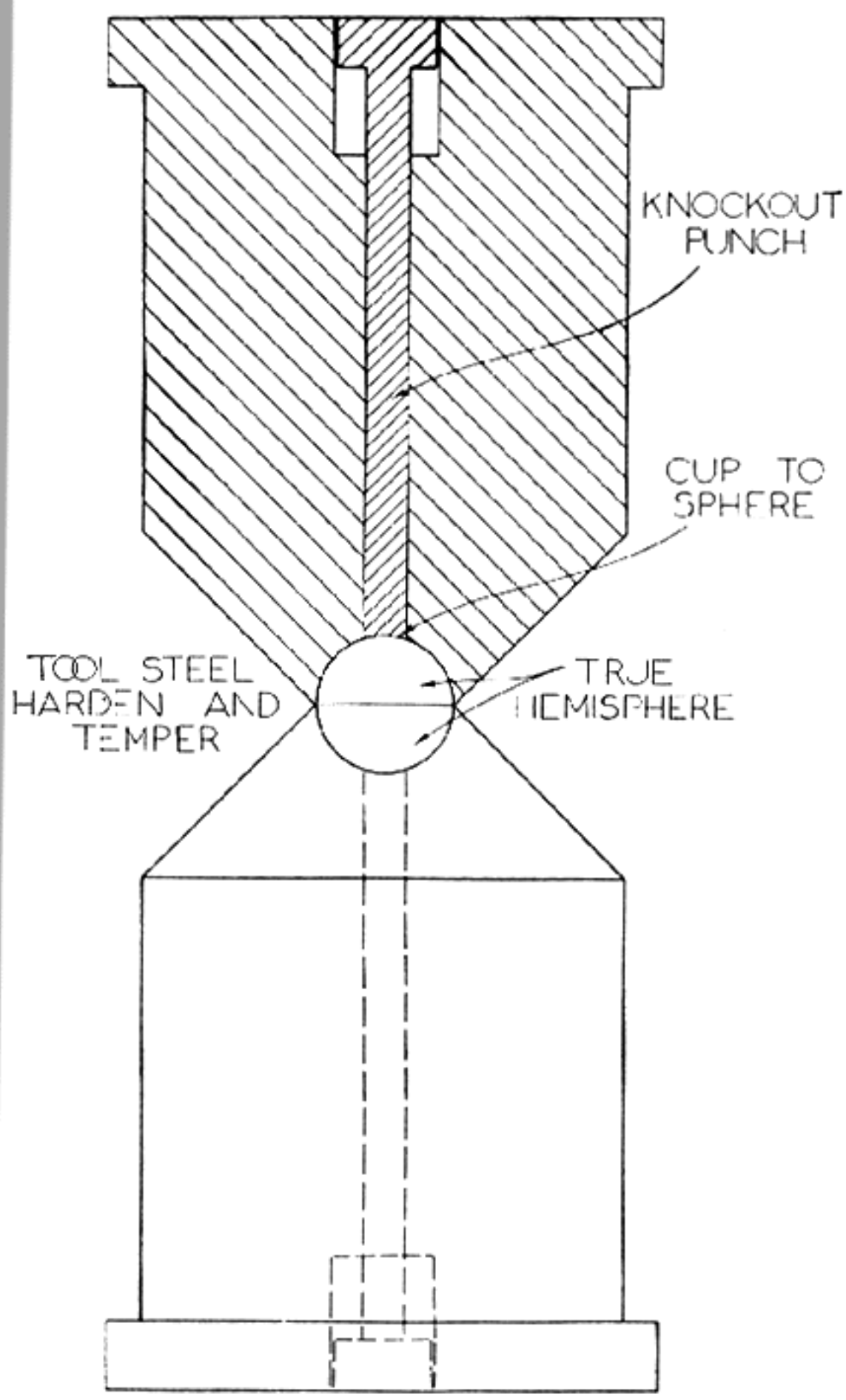

Fig. 128
Shrapnel-ball dies. Form of die used to make the lead balls encased in shrapnel shells

tool steel, is perhaps the best; all reamers are made from it. The length is governed by the requirements. The shorter they are, the better, for there will not be so much spring. The end on which the cherry is to be made is roughed out into a ball. The end which the center supports is roughed out with the lathe tool, leaving only enough metal to finish with the form cutter in the V and then turned back in proportion.

When forming the rough-filed sphere, the blank should be held firmly in the lathe chuck, and the lathe run at a slow speed. Set the compound rest so that the tool will be in a parallel line with the work and on the absolute center. Move the cross slide in against the work. Let it gradually scrape its way through the circular form and V-shaped opening in the side, receiving the stem to which the cherry is attached. You can also do this operation by hand by attaching the forming tool to a suitable holder and resting it on a rest attached by the tool post. Plenty of oil must be supplied to prevent scratching or tearing the sphere. The tools should be kept well stoned on the face so that the metal will not pick up on the cutting edge of the tool. Naturally the former is the most efficient way to cut one of these cherries, but the latter may be used when one is in a hurry.

The flutes in a cherry must be cut in the milling machine; first by gashing the flutes on the highest rounded point of the sphere. Cherries must have a greater number of flutes than a reamer because of the end and because of cutting two halves at once in the mould and also in order to produce a finely finished surface. Most cherries have between twelve and sixteen flutes. You will notice in Figure 127 that the flutes do not terminate in the shank but are off at an angle clearing it. This is done to insure a perfectly spherical form by having a cutting side operate at the bottom of the hole while it is being formed. Such a flute is rather difficult to file, but as the flutes are all equally spaced, the first one is filed so that the bottom one is continued clear around the bottom. This is the one and only flute which is cutting and all other flutes terminate near this one, so patience and care must be applied or the blank may be spoiled. In using the three-square file to cut the flutes to make a fine cutting edge and at the same time a sharp V cut, grind away the teeth on one side. This will only allow the bottom side to work, and the ground side will always keep to the cutting edge without removing any metal. By grinding a file in this manner, two acute cutting angles can be had from one file. When the file becomes a little dull on the sharp cutting edge, a little grinding will restore the edge and make it sharp again. Very narrow lands must be left on the flutes, which should not be any more than $\frac{1}{64}$ inch; even less is better. When filing the flutes from the gashed lay-out, first file one and allow it to terminate on an angle clearing the shank. Continue with the next, and so on until all come out at an equal angle, are equally spaced, and are deep enough in the flutes to give good chip room.

In tempering a cherry do not allow it to become too hard above the spherical portion. Draw the shank to a very dark blue up to the ball, and it will be less likely to break. It is better to leave the sphere a dark straw if using carbon tool steel. If oil-tempered steel is being used, the cherry part can only be drawn to a light straw and the shank to a blue. It will be well to stamp the sizes of the cherries on the tool or in any conspicuous place on the shank, with the size in decimals of an inch, so that it will not be necessary to check it with the micrometers before using.

Bullet cherries are stoned after the temper is drawn to a sharp cutting edge; you will find that this operation demands patience, for it requires the use of a square or three-cornered oilstone. As the lands were left very narrow and 0.001 inch oversize, you will find that with care and patience you will have each flute stoned to a perfect cutting edge. The stoning of any reamer or cherry does not require much clearance; only enough so that the cutting edge will clear, which gives the tool a better support and does away with saw edges on the flutes causing the metal to pick up and produce a bad finish in the mould.

Bullet Cherry — If you will send to the Lyman Gun Sight Corporation for *The Ideal Hand-Book*, which costs fifty cents, you will find such a great number of different bullets that it will be almost impossible to construct a new one; still you may have your own invention of some particular type of bullet not listed, or you may wish to carry out some special experimental bullets to prove certain ideas. Then this chapter and subject will be of interest to you.

Figure 127 illustrates two bullet cherries, and if further experiments are to be made on any type of bullet, the principle is based upon the same construction except that you will change diameter, width, length of grease grooves, and ogive at the point. You may wish to make a one, two, three, or four caliber radius, or you may wish a certain design of point which has never been suggested before to prove some of your theories. You may also wish to experiment on the base, placing different angles and lengths, or giving it a boat-tail effect to reduce trajectories in flight; or you may cherish other ideas which have possibilities of working out some theory to your own satisfaction. There is too much work connected with making these reamers, so it will be much better to turn the bullets first from copper, making up ten on a lathe and then testing them on the range for accuracy. Consider the specific gravity of the two metals in the mould. You will use lead and tin, and for the sample bullets, copper; copper has a specific gravity of 8.9; lead, 11.37; tin, 7.29. Mix these to the same specific gravity as copper. Use a great deal more tin than lead, which hardens the bullets considerably. This problem will be worked out to your own satisfaction.

The first operation to be done before the cherry is turned is to make a templet of the bullet's nose. This is made from a piece of $\frac{1}{64}$ sheet steel. All lines and radii can be laid out and then filed to the sharp lines. It is only necessary to use one-half of the templet; this is much easier than to file the complete form. In making such a gauge the point is made to the exact form wanted, guess work being eliminated. In using the gauge or templet, it is necessary to turn and finish the cherry to the correct diameter of the bullet you are about to make and then turn and file on the ogive so that when you lay the straight portion of the templet over the end it conforms to the exact radii. The finish of the reamer or cherry must be so that all tool and file marks are entirely removed before the grease grooves are turned out; these take up the next operation. It is now necessary to grind parting tools to the exact width that the grooves must be, and each is placed in its correct location along the diameter of the cherry. These must be to a given depth. When the parting tool begins to cut or shows that it is just touching the straight cylindrical part of the blank, set the dial on the cross feed to zero and feed it in until the desired depth is reached, by the graduations on the dial. Continue until all grease grooves are cut into the blank and all to the correct depth.

The question of boat-tailing a moulded bullet is a matter of experiment, as explained before, or a matter of preference. The next stage of the operation after the necessary lathe work is to mill the six flutes in the cherry. Indicate this to make sure that when you place it in the chuck on the dividing head it will not run over two or three thousandths of an inch. A 60-degree angle cutter is used for milling the flutes, and this must be set 0.010 inch ahead of center, which will eliminate chatter on the mould when reaming it out in the drill press. When the cherry has the flutes milled, file off the slight burrs thrown up by the milling-machine cutter, and wash it in clean gasoline to remove the oil. Use the coppering solution as given in Chapter XVI. When reamers are to be stoned or filed, always coat the surface of the flutes with this solution, for it will give you the true cutting edge, which may be readily seen as you are working either the stone or the file to the cutting edge of the flutes. Have a small bottle of this mixed for use in all such work and for laying-out work as well.

It is now necessary to file out the grease grooves on the cutting edges and at the same time relieve the sides of these grooves so that there will be well finished serrations in the mould. A finely cut needle file must be used for this operation. It is somewhat difficult to file these out, so some patience and care must be exercised in order to keep the cutting edges sharp and at the same time not give them too much clearance or place a radius in the corners at the bottom. After the grooves are all filed, the cutter is ready to be hardened. This is done by the usual hardening and tempering methods

previously described for the ball cherry. When these operations are completed, it is ready to be stoned on the outside cylindrical portion of the flutes. Polish the lands and coat them with the coppering solution and stone to a keen cutting edge; also stone the cutting edges in the flutes to remove all cutter marks. It is always well to run a fine needle file along this edge before hardening, to remove the rough edge, and when the stoning of this surface takes place, a much better finish will be secured. When stoning up to the cutting edge, do not allow the oilstone to remove too much material on the back end of the flute. Start to stone on the back and gradually work up to the cutting edge. The stoning of a reamer requires some practise to enable one to stone up to the cutting edge with freedom. This will come with practise and you will know the required amount of pressure to apply on a stone. At the same time work up to the edge of the flute with freedom, holding the exact size of any reamer made in this manner. Continue stoning each flute until it is perfect, down to the extreme end. With a fine stone ground so that it will go into the grease grooves, touch them up so that the cutting edges will be well polished, removing any file marks and also any scale left in the hardening operation.

Simple Form of Cherry — Any one who has used a standard twist drill knows how rapidly one of these will cut into metal. Suppose this form of cutting edge could be applied to a bullet cherry. It would not matter if the cherry were spherical or of a conical form. File two cutting edges like a drill on opposite sides of the blank from the shank to the end of the cherry. It is natural that the two rounded portions be left on each side of the cutting edges to be removed; then the tool is nothing more or less than a peculiar-shaped drill or reamer which may form an internal sphere. But this form could not be used or applied between the sides of the blank bullet moulds, as the full rounded sides permit this, form the cutting edges in a manner similar to that of the ones made at first, only not so large, making three or four on each side according to the size of the cherry. These cuts can easily be made with a fine-cut three-square file or half-round file, as previously described for the fine-fluted spherical cherry.

A tool of this kind can be made very quickly and will answer in a number of instances where a bullet is needed to try out for a certain muzzle-loading rifle or revolver. It may not produce the same results as the tools first described, but you may only want this cherry to enlarge some old bullet moulds which have been found and will answer the purpose for the time until you are in a position to make the proper tools and moulds fitting for a rifle that would demand the best in this respect.

Bullet Moulds — Simple as it may seem, most mechanics have more or less trouble making the joints of two half-pieces of metal come together, forming a hinged joint, especially on bullet moulds. Examine those produced by a manufacturer who has all the necessary tools at his command, and often you will find the joints not well made. It may be due to the mechanic's not having the proper knowledge of how "to lay out." Such a joint may have been the excuse for an ill-fitted piece of work. However, it is an easy matter when instructions are followed.

Figure 129 illustrates the proper lay-out to make on the joints of a bullet mould. It will be observed that the line *A* is the surface line of the finished half of the male section where the two halves come together. This is *C* on the female half. The lines *B* and *D* are drawn at right angles to these, and in the intersection of these lines is the diametrical center of the round projection that is to form the joint.

At the point of intersection of these two lines, or where they cross each other, make an indentation with a sharp-pointed center punch. Then lay out the diameter of the joint on both halves. Drill a hole $\frac{1}{64}$ less than the finished size of reamer to be used when the joints are finished and both halves are to come together. After the holes are drilled a counterbore must be made to cut down the surfaces at *E* and *F* and at the same time to leave a sharp shoulder and face. Figure 127 gives an idea of how this counterbore is made. To make this tool, select a piece of steel, chuck it in the lathe, and turn the pilot to the size of hole drilled in the male half. Turn the body the required size of the joint to be made, and under-cut the pilot so that when the face is filed it will be possible to finish this below the size of the pilot. Turn the shank the required size to fit the milling-machine collet or drill-press chuck. When all the lathe work is completed, mill teeth on the end and file cutting clearance on the face of the flutes. Harden and temper as usual. Then stone the face of the flutes and the tool is ready for use.

If the counterbore is to be used in the drill press, cut down each half of the joint on the male section to about half its thickness. The outer circle or cut of the counterbore will be a guide to file to, or you can mill the circle of the joint. When stoning the face of the counterbore, if the face is made just a little convex it will form the surface of the joint a little concave, and a better fit will result.

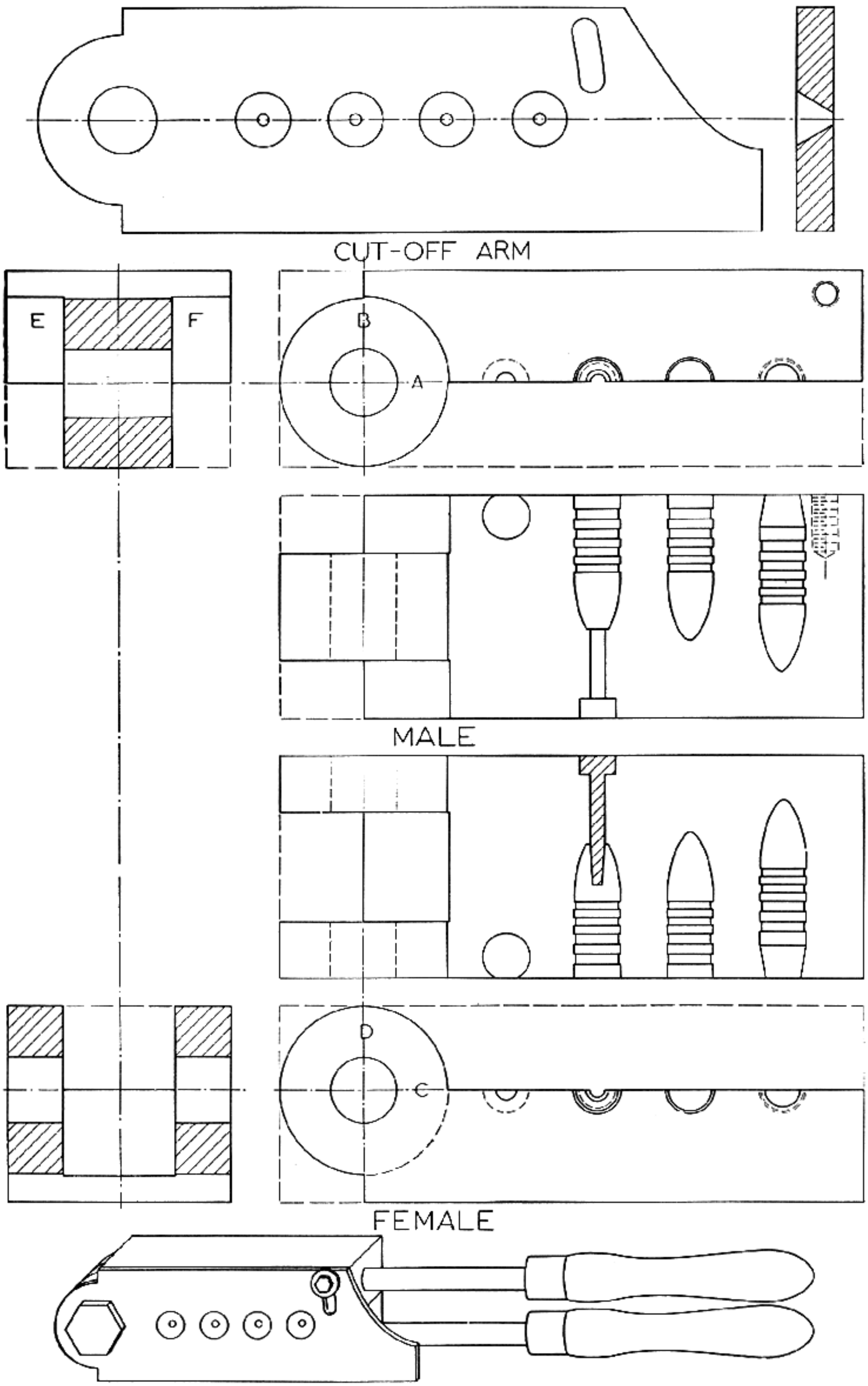

Fig. 129
Lead bullet mould

The female half must be milled out so that the male section will just enter the slot. It is much better to mill this first and counterbore the male part so that a perfect fit can be made. It is also well to mill out the circle as laid out on the female part before the slot is milled, so that a larger amount of the surplus metal is removed before the straddle mill is inserted, as it is difficult to get the inside radius to conform to the male joint. Use a larger straddle mill, which will clear the female joint.

When this is done, place the two halves together, ream the hole, and make a stud to fasten them together, allowing a shoulder for the top cut-off plate, so that when the nuts are pulled tight there will be just enough friction for mould and plate to have a free movement when opening and closing.

Brass is the best material to make a bullet mould from, as it is the easiest metal to work and looks well when finished. Of course, it may be made from cold-drawn steel, but brass is preferable.

The most practical method is to mill the joints on the moulds. The circle is milled by first placing a piece of steel in the milling-machine vise and drilling on one end the same size as the center hole was drilled in the mould. Fit a bolt in this to take one-half of the mould, and hold it friction-tight. By using a 2½ or 3-inch straddle mill a perfect circle can be produced. Fasten one-half of the mould on the holder in the vise and clamp the bolt just so it is possible to turn it. By feeding the mould up to the edge of the cutter the surface or shoulder is cut where the two portions of the joint come in contact when opening. By turning the mould around slowly, a portion of the circle is cut, say about one-half. Remove the mould from the bolt, reverse it, and the remainder of the circle can be cut; the whole "round" and the abutting surfaces are produced by two cuts, enough metal being allowed to smooth the joints with a file. Finish it so that a perfect circle can be seen.

After the stud is fitted you will find that the top and bottom surfaces of the mould do not come together. One is always higher than the other; thus it will be necessary to mill these two sections so that a true and even surface is had on the top and bottom. If the two closing surfaces, *A* and *C*, do not come together, place a light film of Prussian blue on one half. The blue is placed on the surface *A* and the impression left on *C* is removed with a fine file. The perfection of the joint can be ascertained by opening and closing the mould a few times, removing the high spots until the two surfaces show perfect contact and fit the top cut-off plate. This is made from a ⅛-inch Brown & Sharpe ground-gauge stock or from saw steel. You may wish one, three, or even more bullets moulded at one time in these moulds. Establish a center line when this plate is against the edge of the friction stud. Establish this line between the two halves and lay out the proper distance apart where the reamed holes are to come. Drill a small hole on each one of the laid-out lines. With a No. 52 drill assemble the plate again to the mould and scribe each drilled hole into the body of the mould, which should come exactly between the two halves. With a fine center punch, place indentations between the two halves; and with a small combination center drill, establish these centers. First place a small paper clamp on the mould. If a round ball is to be moulded, select a drill the same diameter as the shank at the small part next to spherical termination, and drill to a depth within ⅛ inch of the bottom; this will leave sufficient metal for the cherry to clean out at the bottom.

When all parts are completed, the mould is ready to ream. A drill press is used for this operation. It will be well to give the spindle a thorough inspection to see that there is no lost motion or play between the bearings on the spindle or the arms which hold the spindle. Satisfactory adjustments must be made, not so tight that the machine cannot be turned over by hand, but there must be a free movement of the bolts without lost motion any place between the arm, spindle, and work.

The most satisfactory method to ream a mould is to hold it between the jaws of a drill-press vise and gradually tighten the vise until the mould is completely closed against the cutter. You use a ball cherry the depth of which should not be any more than .010 inch. Less is better, for then you have a ball without any flat when cast. After the cut-off plate shears the flash, a ⅛-inch opening at this point is sufficient. This diameter is not very large at the connection point of the spherical section, but the smaller the hole the truer the bullet is to a perfect sphere. Be very careful when feeding in the vise jaws not to allow this cutter to remove too much metal and catch and break the cherry. The drill press must be run at a slow speed and the feed must be clamped so there will be no lost motion one way or the other. In other words, it must be clamped solidly. The drill-press vise should not be clamped to the table, as this must be free, so that when you tighten on the screw both sides of the mould will be cut evenly. Stop the machine often and brush the chips free of the cutter. This is one point which must be watched very closely, for if this condition is allowed to exist, the cherry may be broken.

If you are using a regular bullet cherry with grease grooves, a much larger hole can be drilled

that will relieve a considerable amount of metal, and the cherry will not have so much work to perform. Care should be used in the manner described for spherical balls—slow feed on the closing of the vise, freeing the cherry of chips, etc. All this must be watched very closely. Also examine the cherry to see that metal is not clinging to the cutting edges. If so, it must be stoned until you have a highly polished surface in the interior of the reamed hole for a bullet with a conical form and grease grooves. You may find it necessary to enlarge the hole in the shearing plate more than 1/8 inch, but keep this diameter and try a few test bullets before it is opened any larger.

You may wish to make a hollow-point bullet; if so, it is necessary to drill through the mould with a drill the size you wish to make the opening in the end of the bullet. Then use another drill to remove a large amount of the surplus metal so that the cherry will not have too much to do within 1/8 inch of the required depth.

Figure 129 illustrates the method used to make a hollow-point bullet. The hole drilled is counterbored to a standard size; then a pin is made long enough to place a hollow in the bullet at a depth which will be ample to give the desired effect. A taper is placed on the end so that the pin is easily removed from the bullet after casting, and a shoulder is turned on the opposite end to fit the counterbored portion so that the correct depth can be obtained on every bullet. This must be faced off flush with the bottom of the mould. As each bullet is cast it will remain on one side or the other. All that is necessary is to give the pin a slight tap with a piece of wood and it will fall out together with the bullet. After the mould is closed, pick the pin up with a pair of pliers, insert it into the hole again, and you are ready for the casting of the next bullet.

The moulds must be provided with suitable handles. Thread pieces of cold-drawn steel of sufficient size according to the weight of the mould, and fit common wooden file handles to the ends. Of course, if you wish fancy handles, two can be turned out of ebony or some other attractive wood.

Material for Casting Bullets — Cast bullets consist chiefly of lead and tin, altho other metals are used. Lead-tin alloys are mixed to give a certain hardness, as lead alone is too soft. The Brinell test shows lead to have only 3.9 and tin 4.1. Add 10 per cent of tin to lead, and it raises the hardness of the alloy to 10.1. When you add more tin, this increase of hardness goes on until a certain point is reached, and then the alloy becomes softer. The hardest point is reached when 66 per cent of tin is added to 34 per cent of lead, which shows a hardness of 16.7 on the Brinell hardness test. The addition of mercury tends to harden a bullet to a little higher degree and at the same time makes it come out of the mould clean and white. A very small percentage of phosphorus renders the bullet alloy very "lively"; that is, the alloy has a tendency to run more freely in the mould. Too much phosphorus is very injurious to a bullet. If any one wishes to use this when making up bullets, it should be in the form of phosphor-tin and then only 300 grains of a 5 per cent phosphor-tin to every 25 pounds of bullet alloy mixed is generally sufficient.

The cores of all commercial bullets are 10 per cent tin and 90 per cent lead, which gives very good results. As lead has the highest specific gravity and tin about four points lower, we increase the tin contents and lower the specific gravity of a bullet, which has more or less effect on accuracy. So to secure the best results a considerable amount of experimentation is required, not only on the alloy used but on the weight of bullet as well, until the correct combination is reached. In mixing an alloy it is best to mix 1 to 10 and first try this, which is 1 per cent of tin to 10 per cent of lead. For example, melt ten pounds of lead and one pound of tin. This gives a hardness of 10.1. If this does not prove satisfactory, add more tin, but keep a record of the amount added so that a check can be referred to when the best results are obtained.

Such work for the man who does his own loading will prove fascinating and a means of reducing his ammunition bills. Having acquired this experience, you may anticipate greater results from jacketed bullets and those using a higher velocity. Casting your own bullets from moulds made by yourself is valuable not only for the experience gained but also for its economy. Today when it is possible to purchase any mould from the manufacturer the majority of men will say that these standards cannot be improved upon. True, but that was how they perfected that standard, and there is still room for improvement. It is to the real rifleman that such information will be of benefit; anyone is capable of becoming one and producing something more accurate than can be bought.

Next in order would be the loading of ammunition, but I shall leave this to those who have gone farther than I. However, some valuable suggestions may be derived by those who have already made their barrels. From the chambering tools, straight-line loading dies can be constructed. These tools are the only satisfactory means of loading ammunition regardless of the number of reloading tools on the market today. The finishing reamer that was

used in the chamber is now used on loading dies to be reamed to a depth which will allow the cartridge to come flush with the bottom.

A special reamer is necessary to ream the clearance for the bullet. After this is done, the die is hardened according to the usual methods. A bullet seating punch is made to the proper length and also hardened. Then a satisfactory base is made which completes a loading die that is known to place a bullet in the case in perfect alinement.

CHAPTER XXIV

Restoration and Preservation of Antique Firearms

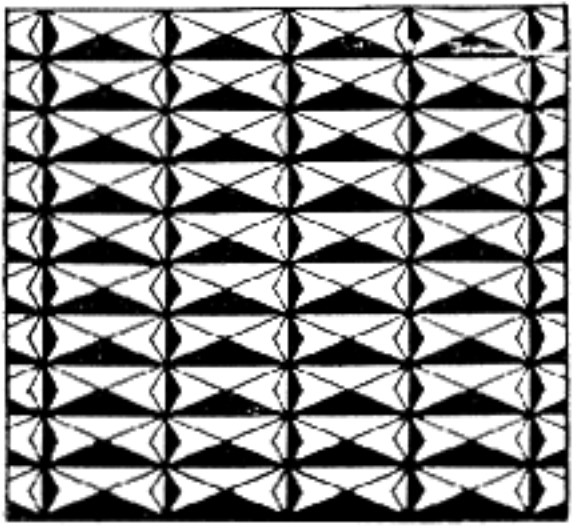

CHAPTER XXIV

Restoration and Preservation of Antique Firearms

TO THE historian as well as to the antiquary and the sportsman the development of the gun must always be an intriguing subject. It is a truism that gunpowder changed the whole aspect not only of civilization but of society as well. When the defensive armor of the knight ceased to be proof against the weapon of his humblest assailant, it set the bounds of feudalism and inaugurated a new era in which "Jack could be as good as his master." In a book such as this it is not desirable or even possible to trace the development of the shoulder and hand gun except in a very cursory manner, and then only in so far as relates to the restoration and preservation of specimens of such old arms as may be part of one's family inheritance, or those acquired for private and public collections. There are some valuable collections of arms in our country, most notably perhaps the Nunnemaker collection in Milwaukee, which is under the charge of that delightful sportsman, Dr. Paul Jenkins. We mention this particularly because of the great willingness of Dr. Jenkins and his colleagues to identify unknown guns for amateur collectors and gun lovers generally. To our amateur, however, the intimate collection which he dreams of some day possessing holds out the greatest charm, and it is to him that this chapter is really dedicated.

In many a country attic stands an arm that would worthily form the nucleus for one's own collection. It may be grandad's old pioneer rifle, as long as he was tall, and intimately associated with the most stirring legends of the family; or uncle's old squirrel gun which performed so wonderfully when squirrels and forests were just around the corner. Aside from the family interest, these old guns rapidly passing into rust and nothingness have a deep interest all their own. They not only mark a stage in the development of firearms, but made as they generally were by a local mechanic, of the simplest materials and with the crudest of equipment, they stand as a monument to pioneer ingenuity and resourcefulness and are an incentive to all of us who love to express ourselves in our firearms.

Most of the older arms have suffered severely from time and neglect and at first glance may appear hopeless of restoration. This is not necessarily so. It is true that as active firearms their usefulness has entirely passed, but many can be restored in appearance to their former selves.

The reconditioning of old arms such as these, and putting them into working order—for this should always be done—requires considerable forethought

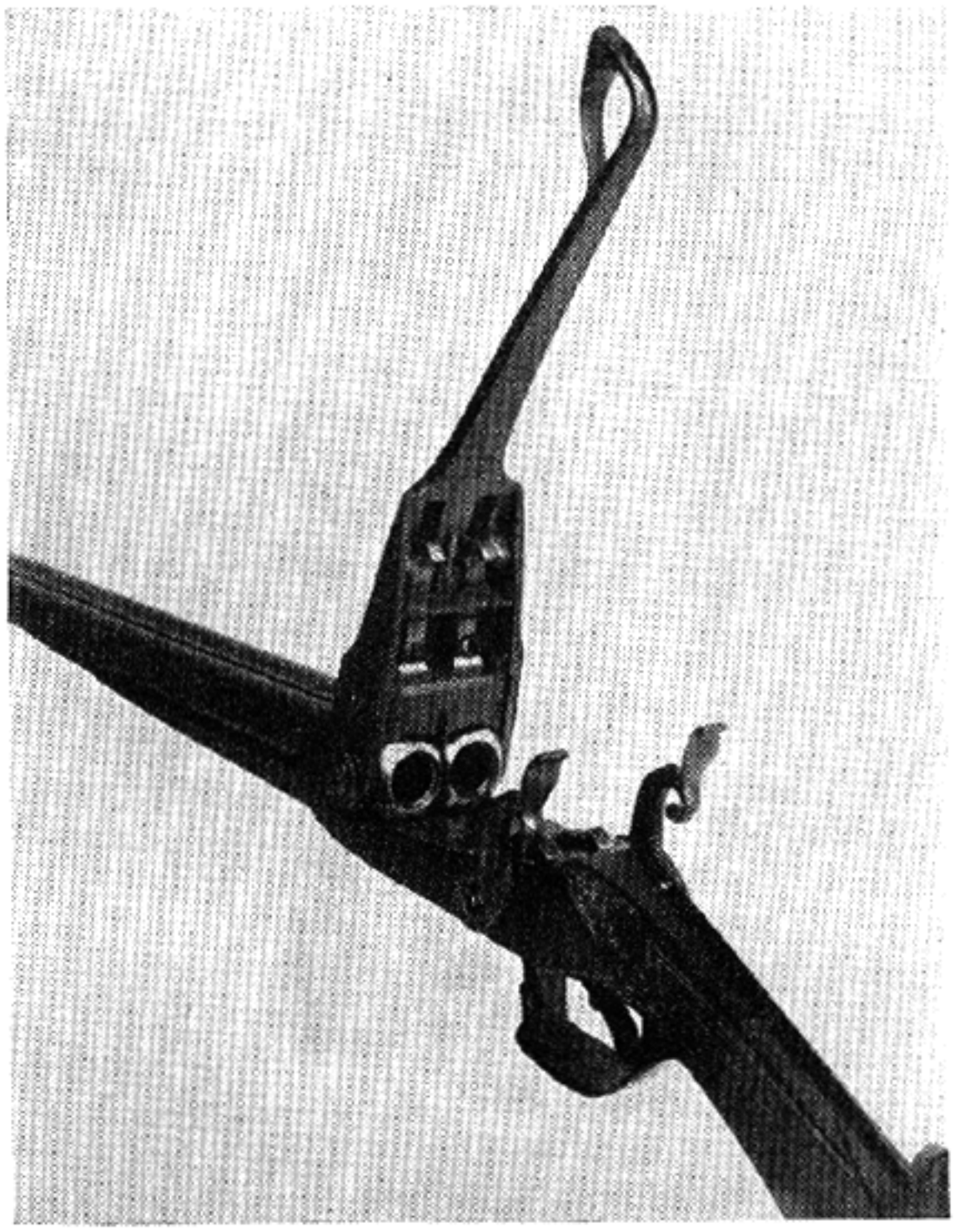

Fig. 130
The Pauly percussion breech-loading gun, made in the year of 1811. Napoleon had the arm tested in his presence: eleven shots per minute were fired by the inventor

and patience, especially when missing and broken parts must be made so that they do not conflict with the ideas of the old forest craftsman and so that they are quite free from any suggestion of newness.

Models running back no further than the Civil War—that period so fruitful of new developments in firearms—are usually restorable to actual use,

providing always that explosives and loads such as they were designed for are used exclusively and no "stepping up" ever attempted. If you shoot any of these old arms you will soon discover how much modern precision in manufacture has done to attain uniformity in shooting. The famous "Killdeer" was not sentiment. It was either the work of some noted craftsman jealously guarding his superior knowledge for his own products, or even more likely the happy accident that unperceived and unintended made some fiddles and some guns strikingly better. So don't be surprized if the discovery of a fine-shooting old gun is an event. Some of them did and do shoot, and grandad might have had such a one. Who knows?

The shoulder guns made or used in America go back to the very beginnings of each gun, for the Spaniards brought their arquebuses with them, and indeed our Puritan forefathers too. Very few of these remain, but an old Puritan arquebus was brought to me some years ago, for reconditioning preparatory to being placed in a museum. It was, strangely, in excellent condition, and when I had finished work on it, could have been put to its original use. It weighed eighteen pounds. With it came the staff upon which it was rested when discharged. This was shod with an iron point where it was thrust into the ground and the upper end fitted with a U-shaped notch in which to rest the barrel. The charge in this old arm was ignited by the end of a coil of smouldering rope which had been treated chemically to render it slow-burning. This was carried in a holder on the right side.

This gun, however, must have been of a very early date, for really the matchlock, which superseded it, was the arm we associate with the first New England settlers. The matchlock introduced two features into the gun and new words into its nomenclature, the gun lock and the trigger. The gun lock was only the simplest mechanism for holding the slow match. In its earliest and simplest form it only consisted of a curved and pivoted lever, the one end holding the match, the other end passing through the stock and terminating in a trigger. When the trigger was pulled the lever moved about its axis and the burning end was thrust into the priming pan. This was a great improvement, for it released the right hand so that it might assist in the holding and give precision to the discharge.

The next step—the first real lock—was to actuate the fuse holder by a spring so that it jumped back automatically from the pan after ignition. Thus the gun lock was born.

The matchlock was superseded by the so-called "wheel-lock." In this the burning fuse was replaced by a mechanism to originate fire. It consisted of a wheel or disc of steel, serrated on its edge, and attached to the lock plate, so that its periphery was at the edge of the flash pan. It was given a rotating motion by means of a chain and spring similar to the old form of watch drum. This was wound up with a clock key. Standing opposite this disc was a hinged arm, holding in its extremity a piece of pyrites. When ready for firing the wheel was wound up, the lid of the flash pan thrust back, and the drum holding the pyrites brought down in contact with the wheel. When the trigger was pulled the pawl checking the wheel was released, and the revolving wheel brought a shower of sparks into the pan and ignited the charge.

The wheel-lock was superseded about 1650 by

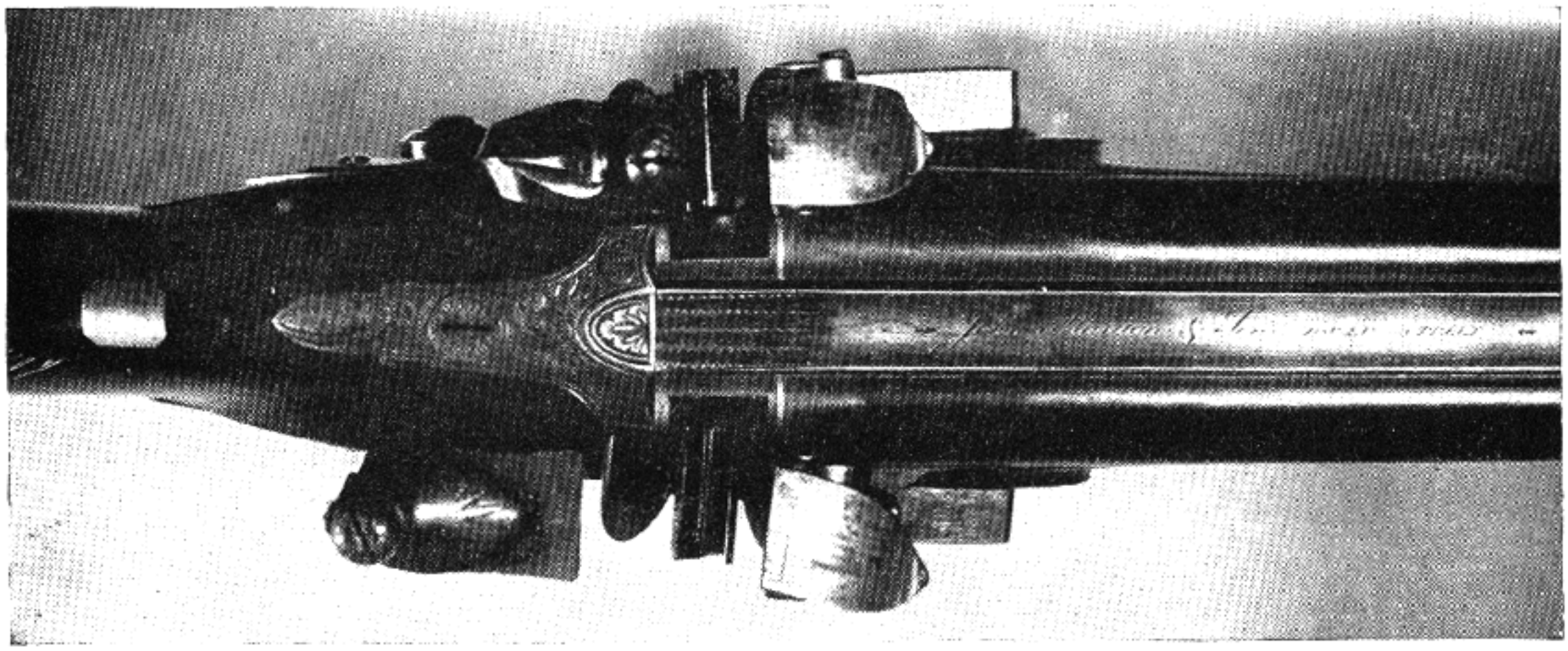

Fig. 131
Flint-lock double gun by Joseph Manton & Son. Note the frizzen connection and the manner in which the barrels are breeched

the flintlock; the great improvement was that the cock, holding a flint, in its falling uncovered the flash pan and thus accomplished two important things—it kept the priming from wind and weather until the moment of firing and automatically exposed it the moment the spark was produced on the frizzen. This arm persisted without marked improvement for two centuries. It is a matter of great interest, however, to know that there were hammerless flintlock guns, the mechanism being housed in the stock and actuated by spiral springs. Some were also breech-loading.

Starting with this gun, the most interesting period in firearms, especially in America, began; little work will come into our hands which antedates this period. We shall therefore confine our remarks and instructions to the flintlock and its successors, the percussion-lock guns and early breech-loaders. The first step in restoration is a critical examination. This is best made in a completely dismounted arm, so strip your gun down to its parts. A reading glass will help you to find distinguishing marks, if any, such as the maker's name, symbol, and dates, and it will enable you to make a close survey of the arm generally. Before stripping, it is always best to probe the barrel, for it is surprizing how many times one will find a charge in the barrel of an old gun. Go quite easily and gently with your stripping and do not apply force irrationally. Rust and grease in time will combine and cause great adhesion, so you must use great care, especially in removing the metal parts from their seatings in the wood. Many of the old stocks are made of maple, and altho this is a strong wood when new, is not a durable one. It becomes "dotey" with age and breaks apart very readily.

You will readily identify the fastenings of guns. The barrel of most of the muzzle-loaders was secured to the stock by a wedge pin in the fore-end and a tang extending from the breech plug fastened to the stock by a screw running downward into trigger plate. In the later and better sporting arms a hook is formed on the end of the breech plug and this engages in a false breech. In this case only the fore-end fastening is removed and the barrel lifted and withdrawn from its rear fastening. Having taken off the barrel, remove it from the breech pin, nipple and nipple plug, and its sights. You are now in position to see the exact condition of the bore, to clean it and restore it. If the bore is not too badly corroded or the walls too thin it will be a comparatively easy matter to put this back in shape. You will proceed as follows:

Dip a bronze-bristle brush fastened to a steel cleaning rod in a powder solvent (given in Chapter XXV, Volume I) and pass the brush back and forth through the bore, keeping the bore well soaked with the solvent. When the brush is completely worn out, which action will not require a great amount of rubbing, place a small funnel in the breech end, and with the muzzle in a pan on the floor, pour gasoline through to remove the rust which had been loosened with the brush. Clean out with one or two patches and inspect the bore to see the true condition. No doubt you will find it very badly pitted; the pits can only be removed by either broaching the bore or reaming and completely recutting the rifling. This will be treated later in the chapter.

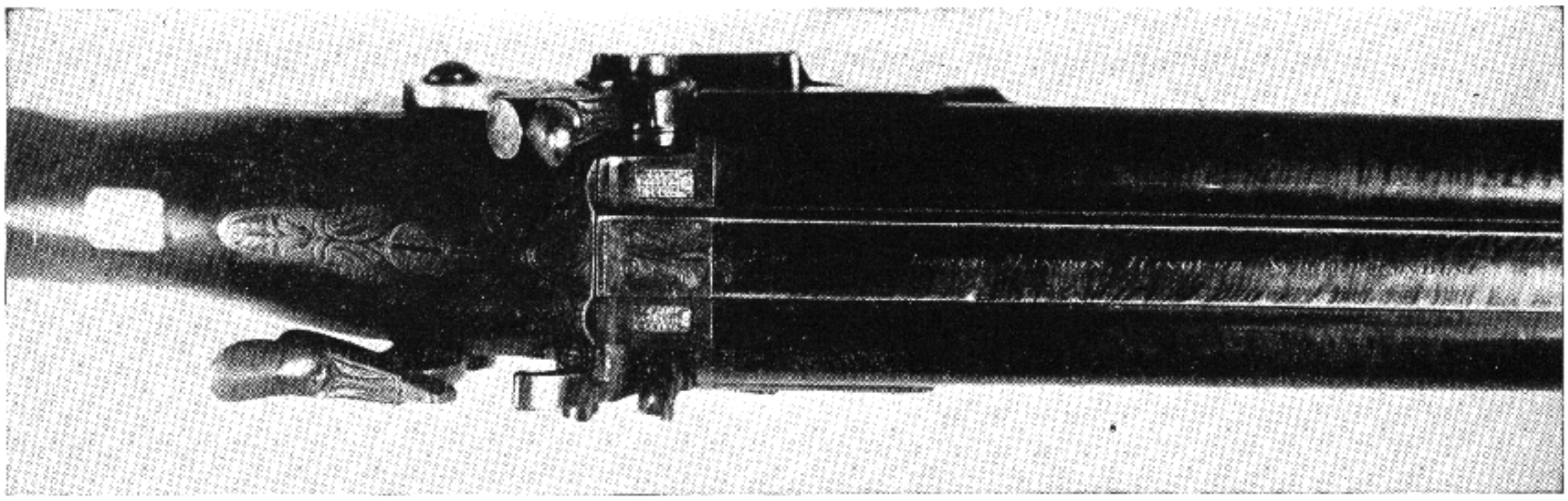

Fig. 132
Joseph Manton percussion-lock double gun. Note Manton's development of Forsyth's principle of ignition

When only desiring to clean the inside of the barrel to test, you can follow up the lapping by using the worn bronze-bristle brush with patch wound well into the wire. Soak this completely with #90 emery and oil and proceed to lap the barrel, using the steel cleaning rod. This lapping may continue for several hours, the patch kept well soaked with emery and oil. Every so often, wash the bore out with gasoline and inspect it, first wip-

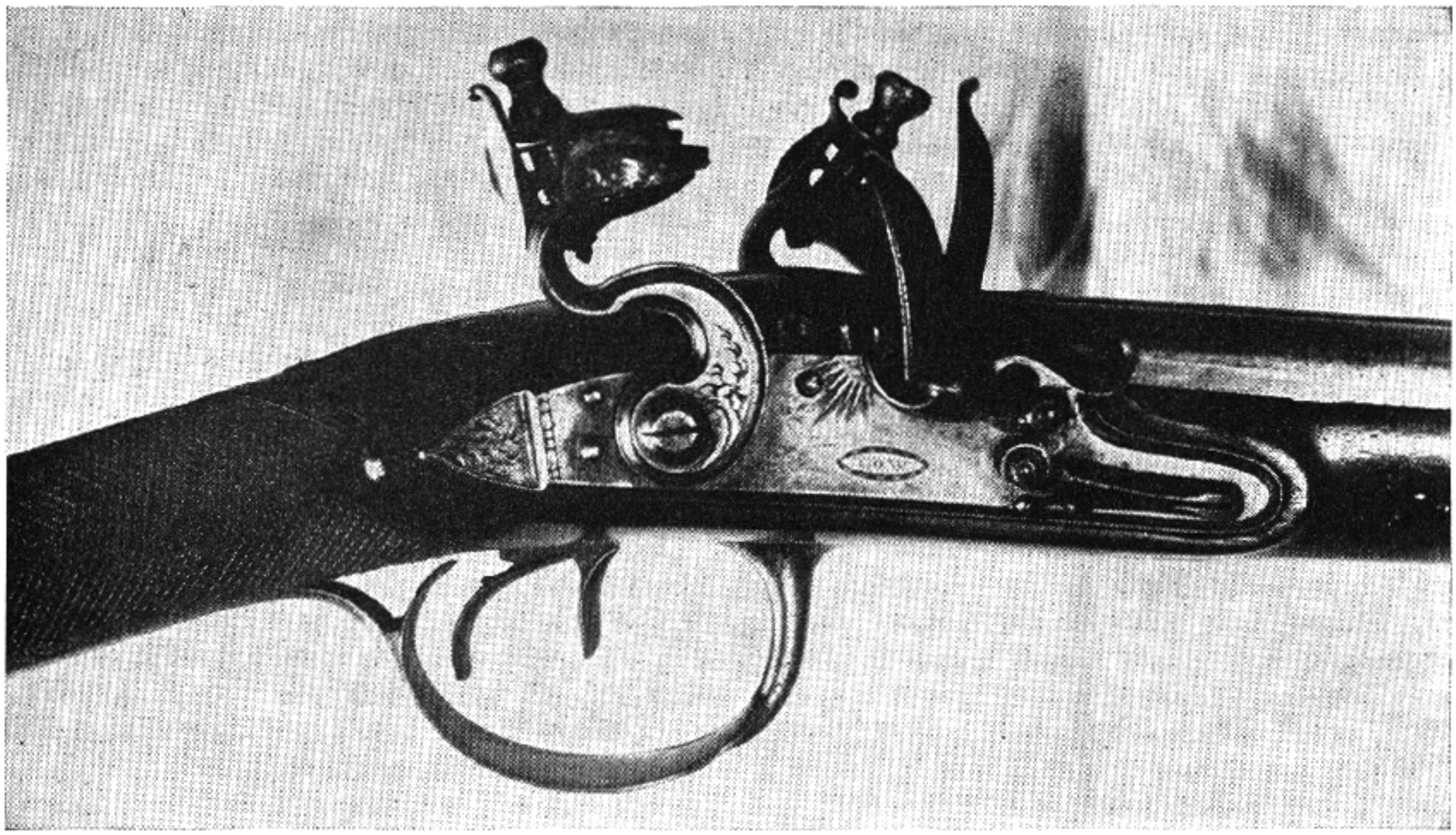

Fig. 133
Flint-lock double gun made by Tow, of London. Note the graceful outlines of the hammer

ing it out with a clean patch. If you find this treatment has accomplished the desired results, no further lapping is necessary. If not, and you decide to lap the barrel with a lead lap, Chapter XVIII will give full details of this operation, which is the same for this muzzle-loader as it would be for a new barrel. After the bore is enlarged you may find it necessary to make a new bullet mould; Chapter XXIII will give the full details of how to make it.

Rifle Barrels — If it is a rifle you will decide at once whether its shooting days are over, or whether you intend to make further use of it. In the first instance you will only be interested in removing its dirt and rust so that it may be preserved against corrosive action in the future; in the second instance, that of future use, you will have to do more than that in most cases. Some of the old barrels—we allude in this chapter only to such as are really antiques—still have considerable mileage of their own sort, but the majority, being made of soft and poor iron, are pretty well shot out. This, we must remember, was an intermittent disease with all of them that saw much service. Every so often they would be carried back to their makers for a freshening up of the rifling and for fitting with a new mold to cast bullets to the new and larger diameter. The old gunsmiths, even with their home-made equipment, did this very easily and gave a new lease of accurate life to these barrels. You may wish to experiment in this direction yourself, and if you are patient and persevering there is nothing in this process beyond your capabilities. I am going to describe this operation as it was done in the old days and with different methods. Later I shall further describe how a rifle barrel can be entirely re-rifled in several ways. Let me describe a home-made equipment that I saw some time ago.

The plank was 2 inches thick and 6 inches wide, and about twice as long as any barrel to be rifled. At one end of the narrow side were fixed two bearings, one at each end so as to turn an old rifle barrel freely. At the other end of the frame was fixed a circular plate of iron, like a wheel which was made with divisions on its circumference and had a catch fastened to the wood; when the end of this caught one of the divisions it would firmly hold the barrel in place. When this plate was turned the barrel also turned. Inside of this barrel was placed a rod of iron, around which was cast some soft metal, such as babbit metal, old type-metal, or even lead. In the center of the rod a square was filed together with barbs on the squares. The rod was then put in the barrel and the soft metal was cast around this section. This was the rifling guide. A handle similar to a large auger handle was fixed transversely to one end, but in such a manner as to turn around freely on the rod. As the rod was pushed and pulled back and forth, the

soft metal followed the rifling grooves; this caused a turn first in one direction and then in another. Because of the rod being loose on the handle, the hands were held in the same position. Chapter XII will give full details of the modern holder for rifling rods.

The rifling head was attached to the opposite end of the rod and carried a cutter let into a narrow groove made in the extreme end and used as a rifling head. It is evident that if a barrel is placed in the clamps which held the new barrel, and the rifling head, bearing a suitable cutter, is entered into the bore of the new barrel and the rod thrust forward by pushing it with the handle, a faint spiral cut will be the result. When the cutter had done its work, or cut all that it would, the plate was turned one division, rotating the old barrel with the rifling head just that amount on the barrel to be rifled. Of course, it being turned, another cutting was done like the first one, then another, until a full revolution was made with the plate; and so on, until the complete circle of the divisions had been made and a certain number of faint riflings were made in the fixed barrel. The cutter was then removed from its slot, a slip of writing paper placed in the bottom of the slot, and the cutter put in place and a repetition of the same operation gone over again and then repeated until the rifling was of the desired depth. Oil was supplied to the cutter while going back and forth in its work.

One method of reboring and rifling is to make broaches as Figure 84 shows; also a rifling head as shown in Figure 134. Of course, these require machinery to make, but when completed, a perfect bore is produced. The broaches are driven through the bore and made so they will remove about 0.0005 of metal. Then the lapping rod is inserted and drawn back and forth until a perfect bore is the result. When using these tools, supply oil freely.

The simple way to re-rifle after the bore is completed is to make a rod with an elongated slot about ¾ inch long in one end to receive a rifling cutter or "saw" (this is the term used for such tools), and to fix at the other end of the rod a handle like an auger handle, but so fixed that the rod will turn freely no matter how the handle may be held. This rod is inserted in the barrel to be re-rifled and the cutter forced into one of the grooves. The end of the rod should be filed square and barbs placed on the ends of the square. Then soft lead is poured around the cutter and the rod is driven in. When the cut-

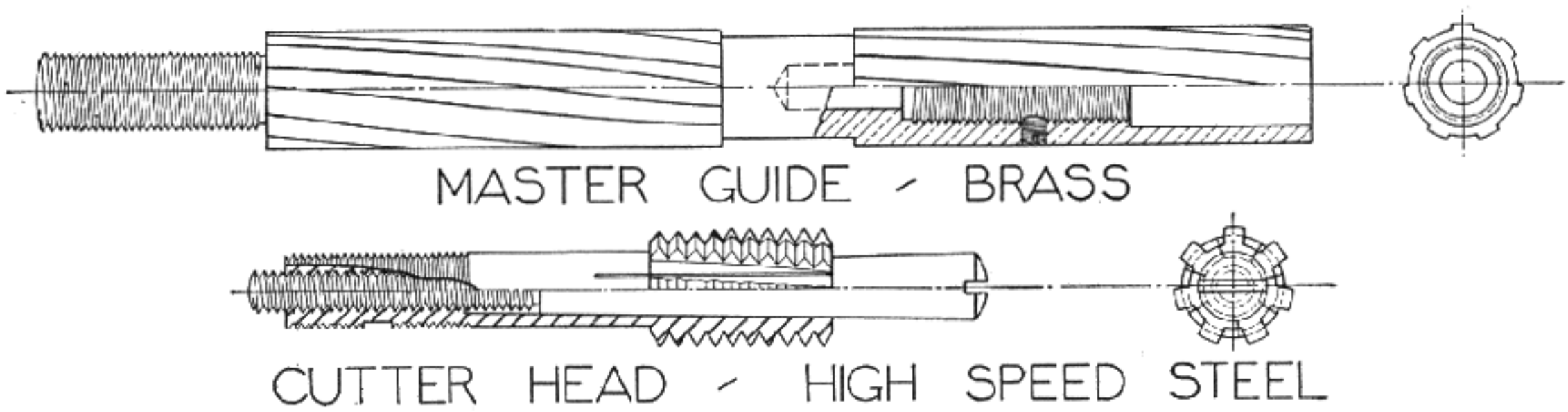

Fig. 134
Rifling-head design for making muzzle-loading barrels

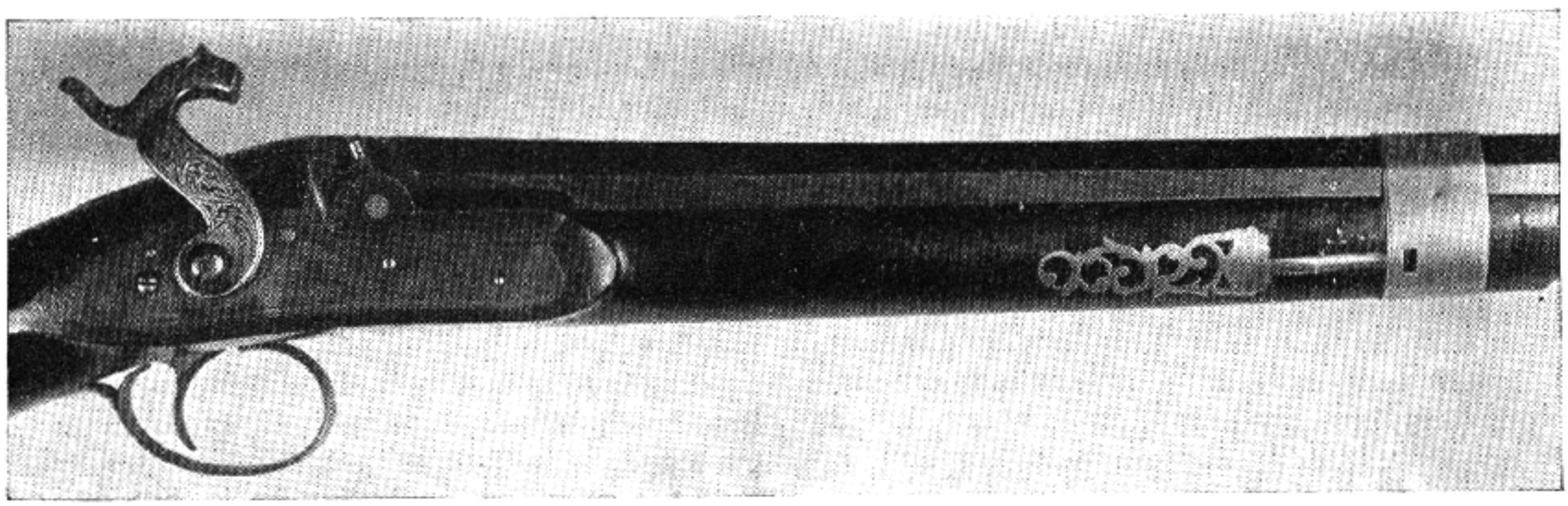

Fig. 135
An early-period percussion-lock rifle. Note the manner in which the nipples are set in the breech

Fig. 136
Side-hammer double gun made by A. Wurffelin. Percussion locks. Note the flush outlines when the hammers are in the fired position

ter is inserted in one of the rifling cuts, it must be deep enough so that the lead will form in the opposite riflings and be free for the cutter to work. This operation is performed from the breech end, but the lead is cast on the rod from the muzzle end. The groove must be marked where the saw first enters. Push the rod free, remove the cutter from the slot, and work the rod through the barrel freely. Now place the saw in position and pull this through. When pushed forward and pulled backward until it will not cut any more, it is placed in another rifled groove and so continued until the circuit of the rifling is made. A slip of paper is then placed under the cutter and a repetition of the process made and continued until the rifles are cut as deeply as desired.

When barrels are so worn that the rifling has not depth enough to hold the tool described for rifling, another method must be resorted to. Make a rod of hard wood about 6 or 7 inches long, so as to slide easily through the barrel, and in one end of this fix the cutter. Around the other end cast lead so as to fill the grooves. It is evident that if this short rod is forced through the barrel instead of a longer one, it must turn with the rifling, being forced to do so by the soft metal engaging the several grooves. The operation of working is the same as previously described.

Modern Method of Rifling a Muzzle-loader — The method which will be used is to drive a short piece of lead, the size of the groove diameter and about 1 inch long, through the barrel. Then chuck this in the collet of the bench lathe and drill a $\frac{3}{16}$-inch hole through the center. Take a piece of $\frac{19}{64}$-inch cold-drawn steel rod 4 feet in length; turn the end to $\frac{3}{16}$-inch diameter, $1\frac{5}{16}$ inch long, or just so the lead plug will press on. Also thread the end with a 10 x 32 die. Tap a short piece of the $\frac{19}{64}$-inch rod for a nut, filing two flat sides so it is possible to tighten the lead plug on the rod. The $\frac{19}{64}$ rod must have a straight line marked the full length—this can be done in a lathe by setting a sharp V-tool in the tool holder and drawing the carriage back. Start the rod through the barrel and mark the muzzle where the straight line begins. The length of the barrel is $36\frac{3}{4}$ inches; in that length the straight line will make just a little less than $\frac{3}{4}$ inch of a turn, and as it comes out the breech end, requires the full turn of the rod. There would be 12 inches more of the barrel needed, so the twist must be between 49 and 51 inches. The next stage is to drill and ream a $\frac{3}{16}$-inch hole into six 2-inch-long brass plugs, for you will need that number to start with. Turn these on an arbor 0.003 inch under the groove diameter. The width of the land is 0.087; this is the proper width of slitting saw to use on the milling machine. All the operations are now done on a Universal milling machine. Procure an American Machinist Handbook, turn to the section on spiral milling to find the proper gears to use to cut a spiral, which will be one turn in 50 inches, and drive this through the barrel. Upon examination you will find the edges of lands turned

too much. Gear up for 52 inches, and if you find that this is too much, give another trial between 50 and 51 inches. A number of trials are made until a plug will go through freely; this determines the proper twist of rifling. In one particular rifle the twist of the rifling was one turn in 50.26 inches. The next operation is to ream the bore, measure the muzzle to determine the proper size of finishing reamer to make, and allow enough to secure a finished bore to the muzzle. Nearly all these muzzle-loading rifles are very badly worn at the muzzle due in most cases to using a steel ramrod; this was the chief reason why they proved so inaccurate as they became older.

The reamers are made spiral, for only the tops of the lands are cut. If there were just a straight hole without any lands, a straight fluted reamer could be used, but when rifling, there are obstructions which the straight fluted reamers would catch, producing a very poor hole. A spiral reamer rids the rifling entirely of chatter and tear on the lands. Chapter IX illustrates the correct method by which to make the reamers used on this rifle barrel. It will be necessary to make three reamers to obtain the proper results: No. 1 roughing, No. 2 roughing, and No. 3 finishing. To secure the finishing size of reamer, turn a brass plug which will just enter the bore about $\frac{1}{16}$ inch and allow 0.003 over this size to make the reamer. The reamers are made with pilots on both ends. As these are pulled through the bore the pilot which enters the rifling must be 0.0005 under the cutting size of the reamer. No. 1 reamer can be made to ream out between 0.006 and 0.008, and No. 2 to leave only 0.002 for the finishing reamer to remove; this gives a very highly finished bore. After the reamers are completed they must be soldered to the end of a piece of tubing and oil forced through to the reamer. On the end of the tube, connect a small rubber hose and use a tire pump to force lard oil through the tube as the reamer is in operation.

The next step is to turn a brass barrel plug to fit the bore with a center in the end. A hard maple piece 2 inches long is fitted to the hexagon end of the barrel. Glue this on the barrel, allowing $\frac{1}{4}$ inch of barrel to show, and let the glue harden. Now chuck the barrel in the lathe, inserting the brass barrel plug, and turn the maple piece to a diameter which will clear the inside of the steady rest so the jaws can be adjusted, as these barrels are rather long for the average lathe. The breech end can be set into the hollow spindle a considerable distance away, so that it is possible to have the travel of the carriage at least 12 inches. The barrel is now ready for reaming.

Make a V-block upper and lower to hold the oil tube in the tool-post holder in the exact center. Remove the tail stock and insert No. 1 reamer from the breech end, clamping well between the V-blocks in the tool post and connecting the oil tube. You are now ready to begin the operation. As the reamers are pulled through the bore, use a fine feed on the lathe and let the carriage feed back about 12 inches. Loosen the oil tube, move the carriage ahead again to the muzzle, and tighten continually to make these changes until the full length of the barrel is reamed. As the tire pump is connected, force a small amount of lard oil into the reamer over 1 inch of travel to the carriage as it feeds back. Having completed reaming with No. 1 reamer, continue with No 2 and then No. 3, the finishing reamer, which will give a finely finished bore providing the reamers have been stoned to a very keen cutting edge.

After the barrel is reamed the grooves are re-rifled. Figure 134 shows the correct outlines for the rifling cutter. Since the milling machine is still set up, the brass master can be made as well as the rifling cutter. These are then fastened to a $\frac{19}{64}$-inch piece of cold-drawn steel with wooden handles

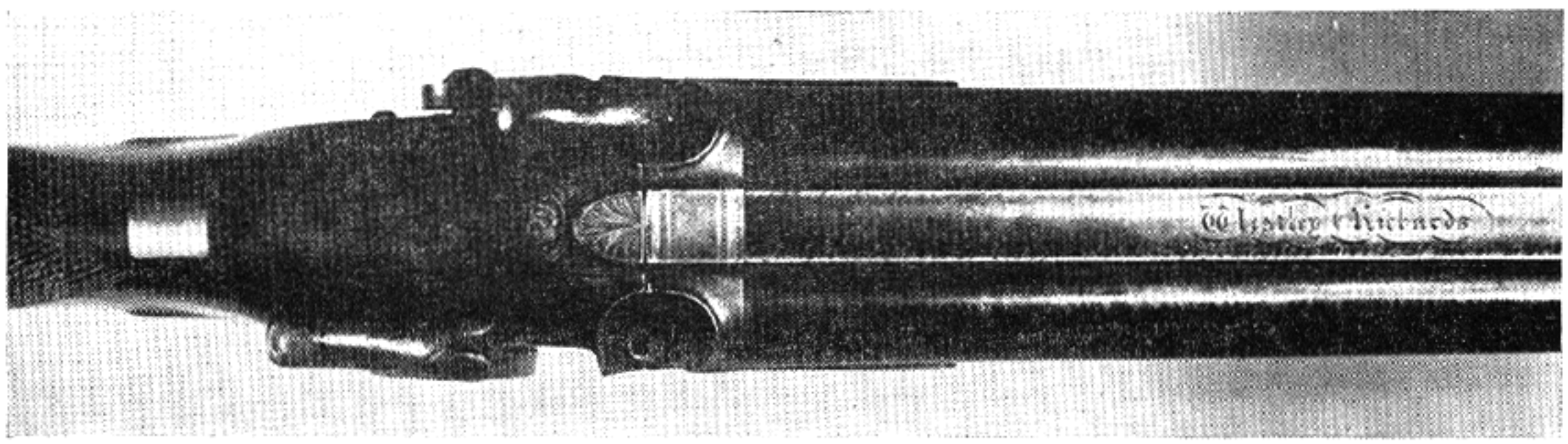

Fig. 137
A fine example of a Westley Richards percussion-lock double gun. Note the graceful cut-outs where the nipples screw into the breech

and ball bearing for freedom of action when pulling the cutters through the barrel. Figure 85 shows the lapping rod and gives the correct dimensions. This operation is done by hand and is the finest exercise to develop chest and shoulder muscles I know of. Two methods may be used; either leave the barrel in the lathe with the steady rest, or fasten it to a solid upright beam or support in such a position that it is convenient to work your arms free to pull the cutter head through the barrel. You can fasten the barrel to the beam by two straps and four lag screws. When the rifling head is working through the barrel a considerable amount of fine chips will accumulate. These must always be cleaned out each time the head is pulled through, always using the same groove, and marking the barrel and rifling head. Have a pan of lard oil at hand and dip the head in it each time. Also pull an oil-soaked patch through before entering the head so that the barrel will be well lubricated.

The adjustment of the tapered end plug requires but very little to have the cutters take a good clean scraping cut. If it so happens that you cannot go deep enough with the present adjustment of the end plug, make a new one, just a little larger on the taper than the first. You will find that when the cutters are made properly the rifling will come out clean and distinct.

Now make up the lapping rod from $^{19}/_{64}$-inch cold-drawn steel and fasten to the handles. First, thoroughly clean the bore. The process on the barrel will take about an hour. The barrel is lapped from the breech end so that the lapping rod is run through the barrel to the muzzle, allowing it to set below the muzzle about ¼ inch when pouring the lead. Run the rod through from the breech end and wind string in the cannelures. This may be done before the rod is inserted in the barrel. The cotton string is only to prevent the melted lead from running down the barrel. Now heat the end of the barrel slightly, so the lead will give a full and perfect lap, the same as when a mould is at the proper temperature. Have the lead hot and pour into the muzzle. It is now ready for lapping. Use flour emery mixed with paraffin oil. The barrel is lapped until highly polished and then finished with 320M optical emery and rouge to secure the highest finish. (See Chapter XVIII.) You will be more than proud of your efforts and will be anxious to give the weapon a trial on the range to see if the stories you have read of these muzzle-loaders are true.

Locks — Gun locks contain all the mechanism there is in a gun, and so, necessarily, they contain most of the complication. However, when the function of each part is closely observed and its relation to its neighbor understood, the gun lock becomes, especially in the old arms, a very simple mechanism. In reconditioning an old gun it is always advisable to take down the locks, clean and polish each part separately, and in reassembling,

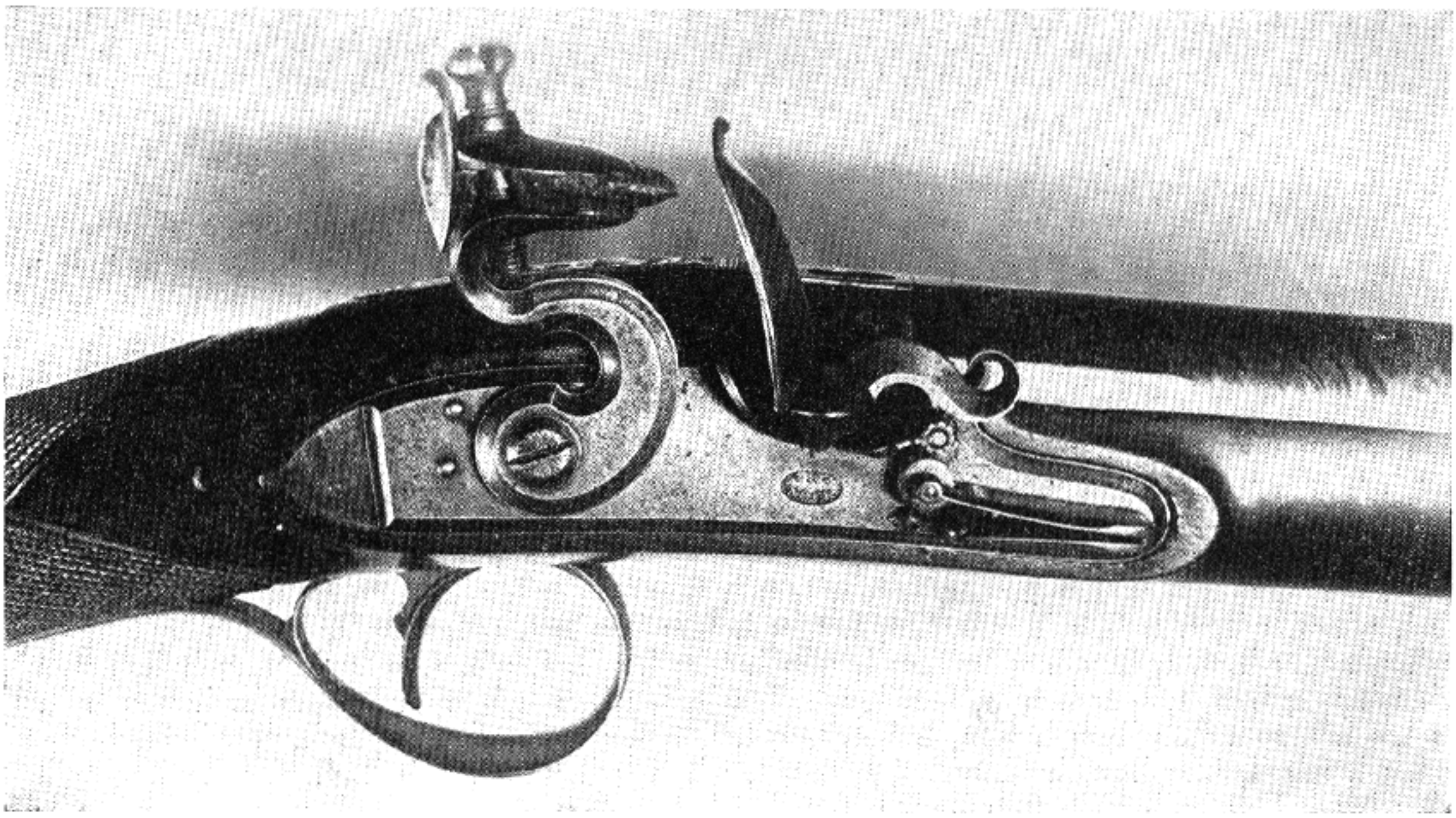

Fig. 138
Flint-lock gun made by H. Nock. Note the outlines of the frizzen

make any adjustment or repair necessary. To take a lock apart it will be necessary first to compress the main spring beyond its normal compression and to hold it in compression while removing it. This is best done, if you do not have the gunmaker's special tool, with a small hand vise. If it is a highly polished spring you will pad your vise jaws with some thin leather; screw up the vise until the hammer is released from the spring's action, then press down the sear spring and let down the hammer. The main spring is now quite loose and you will lift it out still held in the vise. Remember just how you grasped it in your vise, and where, so that when you assemble you will know just what to do. The rest of the stripping is easy. It is well to have an empty receptacle handy such as a glass jar to place and hold your lock parts, and if you have any fear of "getting things mixed" you may make a rough diagram of the locks before dismounting and place this with the parts before the time of assembling. In this, as in every part of gun work, be sure to use suitable screw-drivers with untapered square points so that your screw slots are not marred. Nothing looks so bad on a gun as chewed-up screws.

In fitting a new outside hammer to a lock you will find that the greatest care is necessary if you are to retain tightness and precision. The usual practise is to drill a hole nearly the diameter of the square of the tumbler axis and file out this hole until it fits the square. Unless you are expert with the file it will be best to file up a square broach, and as you file, drive this into the hole. This will check up on your filing and keep the hole square and straight. Again I repeat, go slowly and carefully in this fitting or a loose hammer will soon result. If you have a loose hammer, your only recourse will be to peen up the metal around the hole with a punch so as to force metal to the hole and then refit again.

Furniture — This term comprises the rest of the pieces that make up the gun: the trigger and trigger guard, patch box, butt plate, fore-end tip, etc. These you have removed and they also are ready for cleaning and reconditioning. These with the barrel and locks comprise all the metal work of the gun; we shall now describe the manner of cleaning and restoring them. First, get rid of the grease and then the rust. To degrease, it will be best to use a metal tank, and if you are equipped with a bluing outfit, use your pickling tank for this purpose. Make a strong solution of lye or caustic soda and boil your parts therein until all grease is removed. To remove the rust, empty your tank, and having made up a solution of binoxalate of potassium, put 2 inches of water in the tank, bring it to a boil, and then add the binoxalate crystals. The amount of the crystals required will be determined by the condition of the rust. Add a small amount at first, and then more if needed, frequently removing the work and noting its action. This method will answer well unless the arm is very badly rusted; in such case it may be better to boil the parts in a solution of two parts sulfuric acid to eight parts of water, adding more acid if necessary to bring the steel out white. After removing the rust, boil the parts in hot water to kill further action of the acid. As this cleansing will simplify all your subsequent work it is well to do it thoroughly and painstakingly.

The next step is to polish all metal parts. You will do this, if you have power, on a buffing wheel with fine emery paste. If you do not have power, fine emery and crocus paper will do the work; but, of course, they will require more time. Finish all the parts, even those which will be concealed from view, for the cleaning and polishing will halt corrosion and will restore the sweet working that is such a charm in a gun lock. The barrel will probably have to be "struck" or filed longitudinally or

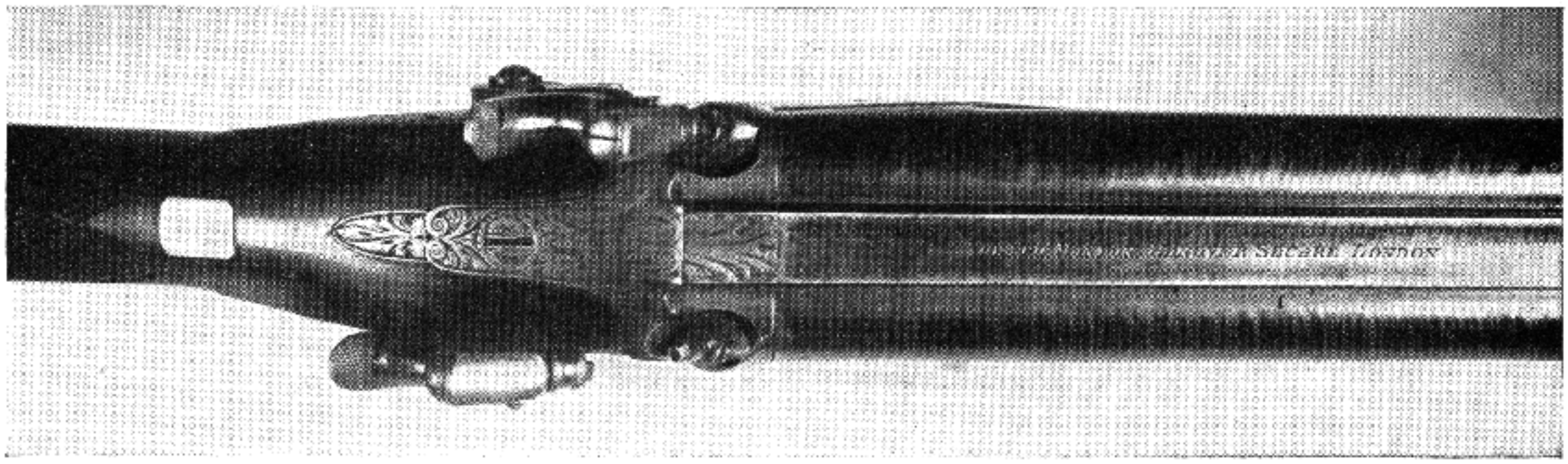

Fig. 139
Early example of Joseph Manton's percussion-lock double gun

draw-filed in order to get a smooth unblemished surface and then highly polished preparatory to its bluing or browning.

Missing and broken parts must now be made or repaired. There is no part, I think, to be made that is beyond your ability. The steel parts are small and a little forging and more careful filing will produce them. The brass parts, if missing or irreparable, are easily cast, as brass melts at a low temperature and is easily manipulated. Make up a suitable "flask" or wooden frame to hold the sand, constructing it, of course, in two parts so that the pattern can be removed from the moulding sand. You can often patch up the old part with plastic wood or some similar substance to use as a pattern, but if the piece is lost you will have to make a wooden pattern to use in your mould. The more accurate you make this the less subsequent filing will be required. Remember that metal shrinks in cooling, so your patterns must be slightly oversize. Remember also that a slight angle must be given to your pattern in all its sides, so that it may be lifted from the sand without disturbance. Vent your mould near the top by inserting a wire when moulding and afterwards withdrawing it; and arrange, whenever possible, to have your opening for pouring so placed that the bottom of the mould will fill first. This prevents air bubbles from forming in the casting. Do not heat your metal beyond the point at which it first flows freely.

Often a piece of steel may be substituted for a brass part and afterwards brassed. The brassing is accomplished as follows: Clean and polish the steel or iron thoroughly, being careful not to touch its finished surface with the hands. Plunge it into molten brass, heated in a crucible. Remove it immediately and let it air-cool. This surface can be polished and burnished and antiqued also if desired.

Now that your metal parts are made and polished, refer to Chapter XVI for the bluing and browning of steel and the antiquing of brass by getting an artificial "patina," as the green oxid is called, upon it. After this is done it will be necessary to varnish or lacquer the exposed metal parts in order to preserve the color and finish. A good varnish for this purpose is made as follows:

2 oz. shellac
4 oz. dragon's blood
960 cc. pure grain alcohol

Dissolve the shellac in the alcohol and add the dragon's blood. Apply evenly with a very soft brush without heat.

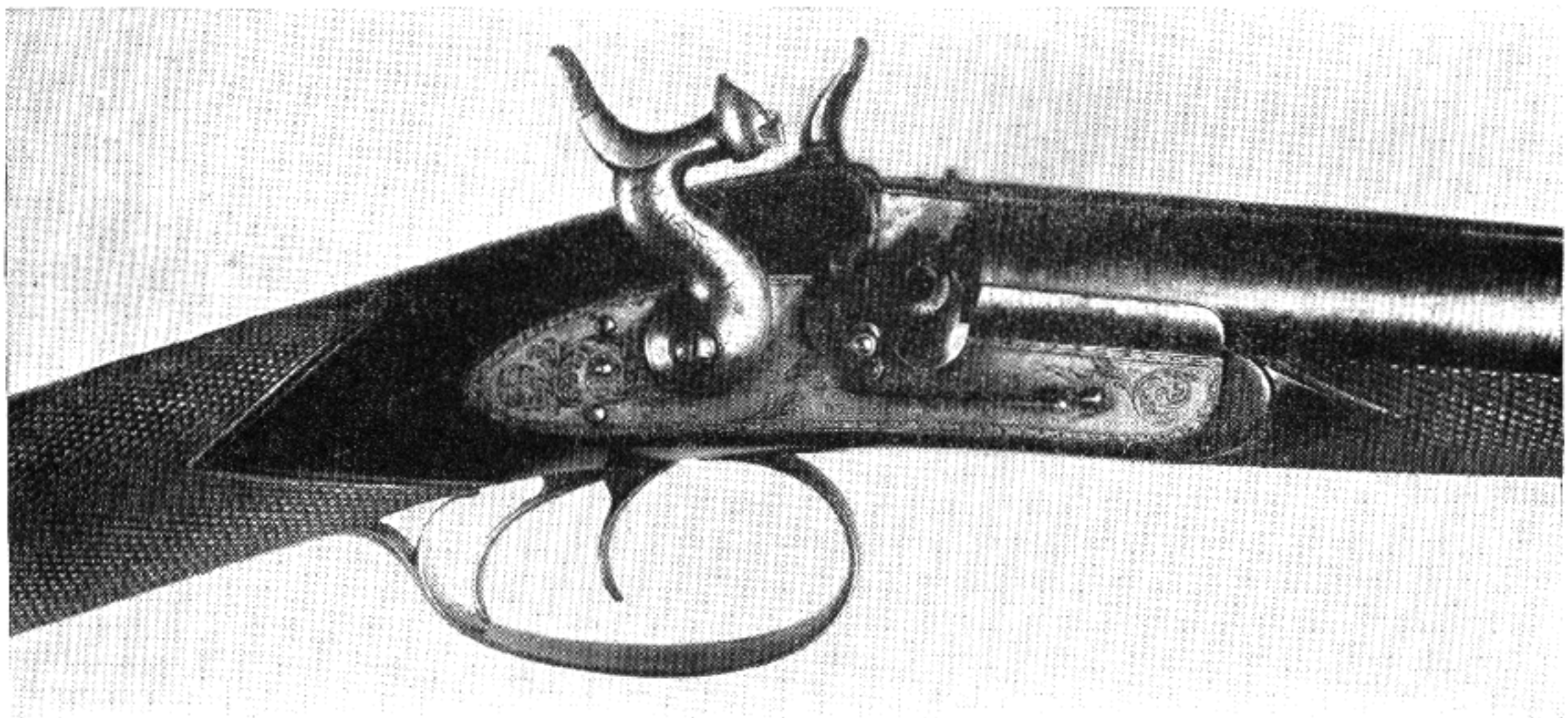

Fig. 140
An early example of William Moore's percussion-lock double gun

When the barrel and all the furniture are finished, the lock-plate, hammer, bridle, screws, sear, and breech plug will be given the cyanid-bath treatment as given in Chapter XVI. When this is completed they will be given a coat of the same varnish.

If an antique appearance is desired on old barrels, it may be secured in this way: After browning, boil in a logwood solution for one-half hour. One-fourth pound of logwood in a bluing tank of water will be about the right strength. The depth of the color may be raised by polishing on a fine wire wheel. Then varnish.

Ramrod Pipes — When ramrod "pipes" or thimbles are to be made it is a very simple operation. These pipes may be made of iron, brass, or silver, but ordinary sheet-iron is generally used. The best thickness is 20 to 22 U. S. sheet-metal gauge. This can be cut into strips and rolled over a steel rod of suitable size, using a wooden mallet to strike them as they are revolved and held in the vise. The upper pipe should be 2 inches in length, the middle pipe 1½ to 1¾ inches, and the lower one about 1 inch. For permanence as well as appearance a long pipe is preferable.

To attach pipes to the barrel, the contact points of both the pipe and rib or barrel must be filed smooth and clean. It is then well to test them by inserting the rod and pushing it into place. Mark the place on the rib or barrel where the thimbles are to be fastened, and remove both thimbles and rod from the gun. If they are to be attached to a rib, file a spot the length of the thimbles where it is to go and file it of a depth equal to the thickness of the metal of which the pipe is made. Do not file too deep or you may cut through the rib so that the rod will bind or rub as it is being pushed down in place. Have the joint of the pipe come in the center of the rib as it is soldered in place. Tin the seats on the barrel and the pipe carefully over a Bunsen burner or the charcoal forge fire, and for a flux use No-ko-rode soldering salts. A tinner's soldering copper is best to apply the solder.

When the barrel is cool enough to handle, put the thimbles on the rod and the rod in place as it is intended to be when finished. Confine the thimbles to the barrels with pieces of binding wire, using two pieces to a thimble, one at each end. By putting the rod in the thimbles and confining them thus, there is danger of their being twisted after being fastened; by putting on two wires there is less danger of their moving while being soldered to the rib or barrel. Remove the rod and hold the barrel and thimble over the fire until the applied solder melts on both the barrel and thimble. When all are soldered, let the barrel cool, remove the binding wires, and wash with warm water to remove any further action of the soldering salts. Scrape off the superfluous solder, rub the barrel and thimbles bright with emery cloth, and finish with the browning operation. Those who may wish a fancy thimble, will find one illustrated in Figure 141.

Oftentimes ribs are missing on muzzle-loading rifles, or are loose. Upper and lower ribs on shotguns also may have broken away and must be soldered in place again. To re-solder these parts see Chapter XXV, which gives full information on the subject. We use the same methods today as were used on these arms years ago.

Fore-end Tips — A great number of muzzle-loading rifles with short fore-ends have the fore-end tips either lost or broken, and it is necessary to replace them. They are generally cast right on to the fore-ends to get a perfect fit. After removing the old tip, dress off the wood smoothly and insert the barrel in place. Then put a short piece of wood in the rod groove, the size and shape of the ramrod. Let this piece project 4 or 5 inches, for it serves a double purpose; it prevents the metal from flowing into the hole, and at the same time makes the hole to receive the ramrod. Now, wind thick paper around it—smooth white bond paper is best. Also cover the stock and barrel adjacent to the tip with heavy paper and tie it firmly and closely to protect them against the hot metal. See that the space between the paper and the wood is left large enough so that the metal can be dressed down a little. Cut little notches in the wood to key the metal to it more firmly. Fix the gun in an upright position so that the metal will flow evenly. Always heat more than is actually needed for the tip, so that any dross will float to the top and can be sawed off. File and polish to the finished form.

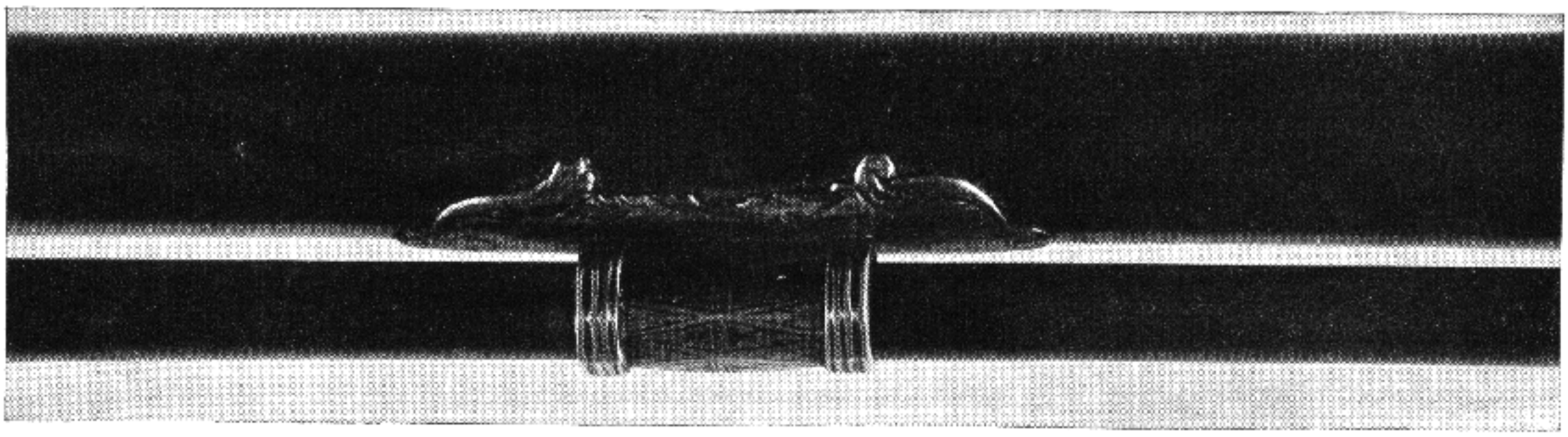

Fig. 141
The silversmith's art applied to the ramrod thimble of a better-grade muzzle-loading rifle. Made one hundred years ago

The best metal to use for tips is block tin, as it remains white when polished. If you wish the tip harder, add a little antimony.

Nipples — Nipples often are broken or missing, and these have to be taken into consideration in order to make a percussion arm complete. There are a great variety of nipples; they are still made in England. Their forms vary, and there are as many as there are qualities. They may be divided into the musket nipple, the sporting-gun and rifle nipple, and German. The German nipples have coarser threads than the American. The English musket nipple has eighteen threads per inch, also a flat top and a tapered hole, larger at the bottom than at the top. The American musket tube has a screw of 24 threads per inch and has a vent resembling two inverted cones, meeting in a small opening near the center. The top of the nipple consequently resembles a narrow circular ring. Of nipples used in sporting arms of the percussion period, there may be found the broad top, the countersunk top, the taper-bored, the countersunk taper, the reversed taper, the double reverse, etc. All kinds are generally put up with the screw portion made in various sizes. The threads also vary, being as coarse as 18 per inch and as fine as 40 per inch.

It is also necessary to make a nipple wrench, to remove and put these in place. This can be bought in England if one does not wish to go to the trouble of making it up. With an unsuitable wrench one will frequently break a nipple at the square if it should be very hard, and then it is difficult to remove.

Forming Decorative Metals — You will find that most of these arms are highly decorated, and if any embellishments are missing, such as a silver inlay, you will be able to give full scope to your artistic abilities. In shaping silver under the hammer, no heat will be necessary. The metal is so malleable that it may be drawn into any shape by simply hammering it cold. The only difficulty likely to be encountered in this kind of work will be the hardening of the metal under the influence of the hammer, but this may be eliminated by heating the silver to a dull red and letting it cool gradually without quenching. Care must be taken not to heat it too much above the dull red color, as it melts quite easily. After forming silver to its general shape, file it down to the desired shape, and finish with a fine file. Then polish with fine emery and work it over thoroughly with a burnisher. Buff with rottenstone, and when a particularly fine finish is desired, buff with rouge. To clean silver, wash well with a little spirits of ammonia reduced in strength by twice its bulk of distilled water, then rub dry and bright with soft leather. No kind of polishing powder will be necessary. Some men clean silver by first washing it with diluted hydrochloric acid, then immediately covering the surface with dry prepared chalk, brushing off the surface and rubbing clean with chamois skin. This acts very well, but care must be taken to get the acid thoroughly cleaned off, else it will have a tendency quickly to tarnish the silver again.

Copper is almost as malleable as silver, and works very well under the hammer in a cold state. Heat adds nothing to its malleability, altho, as in the case of silver, exposure to a low degree of heat followed by gradual cooling softens it somewhat when it has been rendered hard and brittle by long hammering. It polishes very well, but does not long retain its brilliancy because of its disposition to oxidize. Heating increases its oxidization, and repeated heating and cooling would soon wear it entirely away.

The beginner will find that brass was most used on the old arms, for usually the furniture or fittings such as the butt plates, trigger guards, patch boxes, etc., were of brass. This material is a combination of copper and zinc, and since zinc is not so malleable as copper it renders the brass less malleable. Neverthless, it forges out very well under the hammer in a cold state, and this is the only condition that it can be worked in. Hammering increases its hardness rapidly, soon converting it into a very fair spring metal. Brass springs are quite common, but are seldom used on gun work. They are all made by repeatedly hammering or rolling the metal while cold; as in the case of both silver and copper, heating and gradually cooling removes the hardness.

Ramrods — Often these antiques have the ramrod missing, also the thimbles and under-rib to hold them. It is well for one to know how to make the ramrods, for the weapons are not complete without those in place. They are made in two forms: the straight rod for the rifle and the tapered rod for the shotgun. The wood best suited for this purpose is hickory, which is split and then turned into shape. Other woods may be used—ebony, snakewood, beefwood, osage orange, etc. Rifle rods are made in sizes from $\frac{3}{16}$ inch and larger, according to the bore of the rifle; shotgun rods from $\frac{1}{2}$ to $\frac{5}{8}$ inch in diameter. The measurements given for shotgun rods are at the largest diameter.

To make these rods by hand, the wood is split as straight as possible and then rough-shaved into form, with either a draw-knife or spoke-shave. It is then planed square with a carpenter's plane, and

the square corners taken off, leaving the rod in an octagon form. A few strokes of the plane will remove these corners and it will be nearly round. A new file and sandpaper will finish it true and even. After the rod has been planed square, the best way to hold it for removing the corners and making it in octagon form is to have a V-groove made in a piece of hard wood the length of the rod in which to lay it. Otherwise, it will be very difficult to hold while using the plane. Round straight rods can be finished with a tool like a beading plane, and if this tool is of the proper form and the work is turned around two or three times during the operation, a good rod can be made very quickly. Pieces of broken glass may also be used to advantage in reducing rods. Finish with fine sandpaper.

After the rod is completed, the ends can be turned down, and brass tips turned and placed in the ends; one end concave to the form of the ball and the other for attaching a wormer, scourer, and a section with a slot or mortise cut through it so that a patch can be inserted. Care must be taken when using such a wiping rod, that it does not become wedged in the bore on the up-stroke. When this happens pour a little warm water down the barrel so as to saturate and soften the patch and it can then be withdrawn easily. A cold-drawn steel rod may be made, but a rod made of hickory or any of the woods mentioned has no equal.

Stocks — Old stocks have usually been varnished, and this coating must be removed preparatory to repairing and refinishing. This is best done with commercial varnish remover, procurable at any paint store. If there are dents these can usually be raised by placing over them a check cloth saturated with hot water and pressing with a hot flat-iron. This will form steam and bring the dents to the surface. If wood, however, has been removed, the plan will not work, and you will have to inlay patches of matched wood. When placing a patch in a piece of wood, never follow straight outlines. There are no straight lines in nature, and your patch must not have any. Follow grain lines as far as possible and when you have to cross them do it in an uneven and broken manner. It is a good plan to take a good-sized piece of board and examine its whole surface for a configuration that closely resembles the grain you are trying to match. Having decided its location, sketch an outline which will follow the natural figure of the wood as nearly as possible and cut this out with a small jig- or fret-saw. Slant the saw a trifle so that the patch will be slightly wedge-shaped. Place the patch over its alloted place and with a sharp scriber mark its outlines. As pounding on old wood should be avoided as much as possible, it is best to remove most of the wood in the mortise by means of a Forstner bit. This has no spur and bores a flat-bottomed hole. Then, with small chisels and gouges, cut out to the scribed line. Glue both surfaces and clamp your patch in place until the glue is dry.

When refinishing a stock, under no circumstances use varnish, for it is not a good finish for a gun. There are two better finishes; the quick one is with automobile lacquer, which should be applied with a spray gun to enable one to get enough body. Brushed on, it is most difficult to add material, as the brush washes up the underlying coat. This is a good finish. It is durable, will stand hard knocks, and polishes to a good luster. It has a further advantage in that it can be easily renewed and brought back. For maple, this lacquer finish, I think, is the best. The other finish is the gunmaker's standard finish—the rubbed-oil finish. For walnut and similar dark hard woods it has no equal. It is a finish that use improves and age beautifies. Full instructions for imparting an oil finish are given in Chapter XII, Volume I.

To use varnish remover, saturate a cloth with it and rub it over the stock. Allow it to stand for half an hour and then give it another wetting. The first application softens the paint or varnish and the second one loosens. It can now be scraped off with a blunt tool, such as a putty knife. Then sponge off with another coat, rubbing and scraping until the wood is clean. The wood must now be rinsed in clear water and benzine until every trace of the remover is obliterated. This is essential or it will attack the new finish.

Darkening a Stock — Oftentimes you will wish to darken a stock. After all inlays are in place and the wood is highly finished and polished, "aging" a piece of wood is done with acids, either in the raw state or in mixtures. Acids produce various colors in different woods when used in the raw state. First, a piece of sample wood must be experimented upon with the raw acid. This should be used quickly, being allowed to stand from five to ten seconds, then washed thoroughly with hot water to kill any further action of the acid on the wood. The wood is allowed to dry and is again polished; then it is given the raw-linseed-oil treatment, letting this oxidize and then polishing and using the finishing oil described in the first part of the chapter. With this information, I believe all the essentials for reconditioning can be applied to any antique stock, so that it may be put into shape to present the best possible appearance for any collection. By all means, try to have the gun look

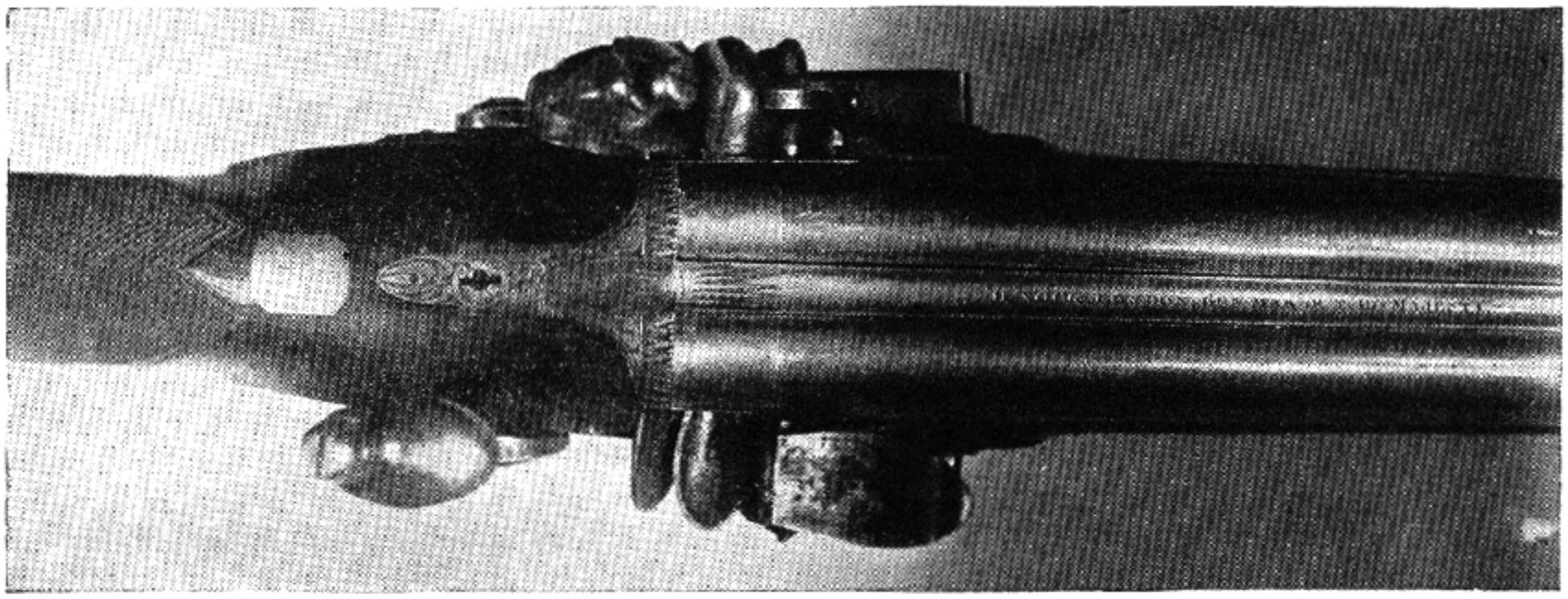

Fig. 142
Flint-lock double gun made by H. Nock. Note the separate breech plugs, connecting the tang

as much like the original as possible.

Antique Finish for Stocks — To give an antique appearance to the stock mix the following:

60 cc. nitric acid
15 cc. tincture ferric chlorid
5 cc. distilled water

Into the nitric acid put about 150 grains of steel filings. Mix in a small stone jar, outside, for the filings will cause a reaction in the mixture. If steel filings cannot be secured, use steel wool. After the action of the acid has stopped, let cool and add the tincture ferric chlorid and distilled water. Then strain into a bottle. Having this solution prepared, take a ball of cotton or a clean cloth. Wet well with ammonia and rub over the stock lightly. Let dry. Form a new ball of cotton, or use a clean cotton cloth and apply the solution to the stock. It is best to wear rubber gloves when doing this, for if the acid gets on your finger tips, it will cause the skin to crack and peel off. Apply the solution very liberally. After applying, wash with hot water to kill any further action of the acid, and let dry. If the color is not dark enough, apply another coat, and let dry thoroughly; then polish with No. 3/0 steel wool and No. 5/0 sandpaper, and polish with rottenstone on a rubber pad or sponge to bring out a high finish. Next prepare an oil by using:

1 pint raw linseed oil
1 oz. alkanet root
30 cc. turpentine
200 gr. lampblack

Boil these, taking care that the turpentine does not come in contact with the flame, or it will ignite. Let cool, and apply to the stock once every two days, until the wood ceases to absorb any more. Let stand for one week and polish first with No. 3/0 steel wool and then with rottenstone on a rubber pad or sponge. The stock will now have a wonderfully pleasing appearance, as the color will come out with the real antique tone which every one admires.

Ancient Arms — Ancient arms should not be refined unnecessarily. Their utility is completely at an end. Their only place is in a collection. Care must be taken, when replacing any broken or missing parts, that these are not finished in a manner superior to the original parts. Much of the metal work was beautifully forged but had no other refinement. The new work must be of the same quality, showing the same delicate hammer work. The finished work, if placed in sulfuric acid, will have the effect of metal eaten with age.

Flints for Flintlocks — The real old gun that looms so big in America's early development and in her struggle for independence was the flintlock; this gun must always remain a picturesque reminder of those spacious days. It is still with us in goodly numbers, and good specimens can be obtained by the collector. For this reason we shall add a few words about the flints that constitute the salient points of these guns. Flints for guns and tinder-boxes are manufactured even today, and the trade-name for the men and women who make them is "knapper." This craft name has almost disappeared, except in the vicinity where flints are still made; but it survives in the surname Knapp. The sole remaining place where the industry of flint knapping flourishes is at Brandon-on-the-Ouse in England. Today the Brandon knappers still make and ship flints for guns to Central and Western Africa, and make "strike-a-lights" and tinder-boxes for Central Europe, where the peasants prefer

them to matches. This industry at Brandon far antedates firearms, for we know from discovery of the deer-horn cleaving tools and flint arrowheads in the vicinity of the old workshops that flint implements have been made there since the stone age.

The best flint for gun work is the most translucent of the common black chalk flint. It should be put in with the flat side upwards, standing clear of the hammer, yet long enough to go through it. Fasten it in with leather washers, as lead strains the lock and cloth is dangerous, for it is liable to catch fire. If you are very particular about the neat appearance of your gun, make a punch for stamping the leather, and change it as often as you put in a new flint.

To make a flint strike lower, you have only to reverse the usual way of putting it in; but if you want it to strike higher, you must either put in a very thick leather washer, or screw the flint in with something under it. This temporary way of regulating a lock to make the hammer fall is worth knowing as it often saves a lot of time. To get the flint to throw a good spark, place fine cross lines on the frizzen with a fine slitting needle file, care being taken not to get these too deep.

In concluding this chapter a word must be said about the old Kentucky rifle. The backwoods hunters who used the long Kentucky rifle had a very imperfect idea of its capabilities. These guns were provided with a rear- and a fore-sight. The sight was immovable and could neither be raised nor lowered, consequently the gun could not be adapted to circumstances of long or short range. The elevation of the sight usually crossed the line of vision and that of the flight of the bullet about 100 yards distant; hence shooting at a shorter range was apt to be a little too high and at longer range too low. In those days of pioneer life on the frontier, "match shooting" (it was not called target shooting then) was very popular and was always confined to a certain distance; 60 yards off-hand, or 100 yards with a rest. The marksman was permitted to take his choice of modes. The prize in a "shooting match" was usually beef. A fat ox was put up to be shot for at so much per shot, which was something on the plan of the modern raffle. When the amount asked for the animal had been made up, the shooting commenced. The best shot took first choice, which was one of the hind quarters of the ox; the second-best took second choice, which was the other hind quarter; the third-best took third choice, which was one of the fore quarters; and so on to the fifth choice, which consisted of the hide and tallow. Happy occasions, indeed, were those old "shooting matches," and splendid indeed was some of the shooting. A regular attendance upon target matches of more modern times with all modern appliances, in the hands of marksmen with national reputations, has never shown us better shooting at 60 yards off-hand, or at 100 yards with a rest and open sights.

After these old percussion rifles have been given

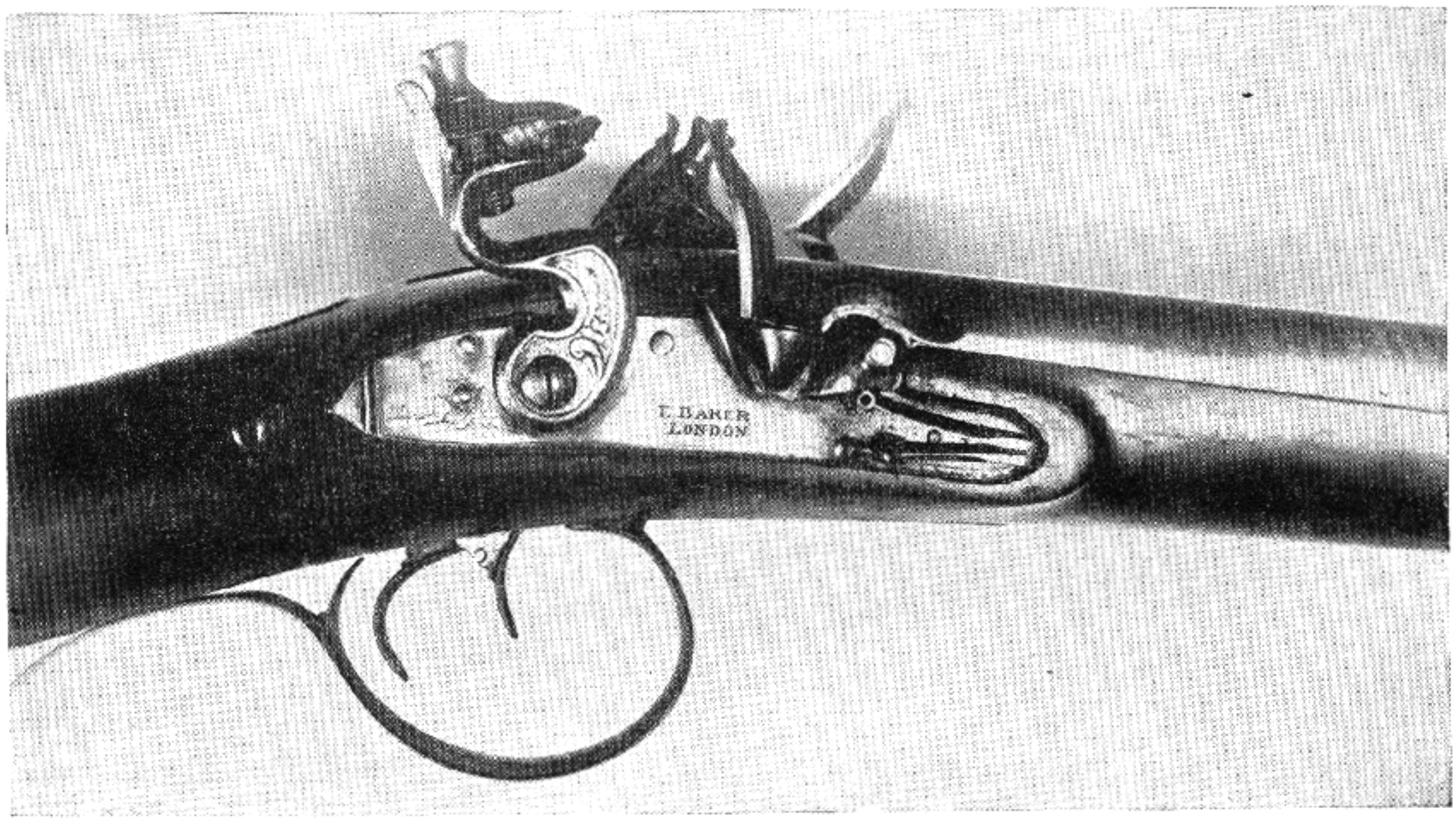

Fig. 143
Flint-lock double gun made by E. Baker

the necessary overhauling to secure the fine shooting qualities that they were once capable of, the beginner will take great delight in their use. If he is so fortunate as to own a real Kentucky rifle in fine condition, there is no greater thrill than testing for skill of marksmanship, holding the rifle on the object while the flint falls, seeing the flash and then hearing the explosion. Modern arms are simple, but if we could develop the art of holding as our forefathers did with such weapons, modern arms would be more than simple to use.

I can not help but express great distress at the way some of the old rifles are worked over or reconditioned by some collectors. Some of these men cannot be approached on the subject of proper finishes, for they have their own ideas about them, regardless of right or wrong. Picture for yourself a fine old Kentucky rifle with a well preserved maple stock inlaid with silver and brass furniture, after the stock has been sanded down, the beautiful wood given a dark French polish, and the brass furniture and steel parts buffed to a high finish. Then picture, if you can, how this rare old piece would look if it had been given a coat of varnish.

Reconditioning old arms and placing them again in working order requires considerable forethought, especially when parts must be made that are missing. This is usually simple but laborious, for you must be able honestly to term the work hand-made. By all means do not make any additions to, or change, these arms in any way, for they may be very valuable some day for their authenticity; if this is detracted from in any way the arm will be worthless. It is permissible, of course, and often more interesting and practical, to remodel certain types of obsolete arms, making them useful for experimental purposes.

The late financial depression has revived many curious things. We find men doing things more simply because they are more economically done that way—things that our grandfathers did. Strange, is it not, how the lack of money reduces the status of the civilization by which we measure culture—how we are made to realize that wealth is the principal factor productive of our great "machine age"? Among the many "regressions to the primitive" I find that some of my correspondents and sportsmen friends refuse to give up shooting simply because they cannot afford standard ammunition for their arms. These tenacious souls have unearthed old muzzle-loaders, percussion-loading shotguns, and even some old cap-and-ball revolvers.

One can always cast his own bullets from lead found in a scrap yard, plumbing shop, etc. Black powder and the percussion caps can be purchased very reasonably; in fact, black powder can be made by any one who will use care in its preparation. It is very simply compounded as follows:

75% potassium nitrate (saltpeter)
10% sulfur
15% charcoal (willow)

Before the wood is placed in a retort, remove all traces of bark. Heat between 550 and 600 degrees Fahrenheit; bake until wood becomes porous. When it is completely made into charcoal, let it age two days before using.

Flowers of sulfur will not prove satisfactory. Use only the stick sulfur and grind to the size which will prove most suitable for your particular needs.

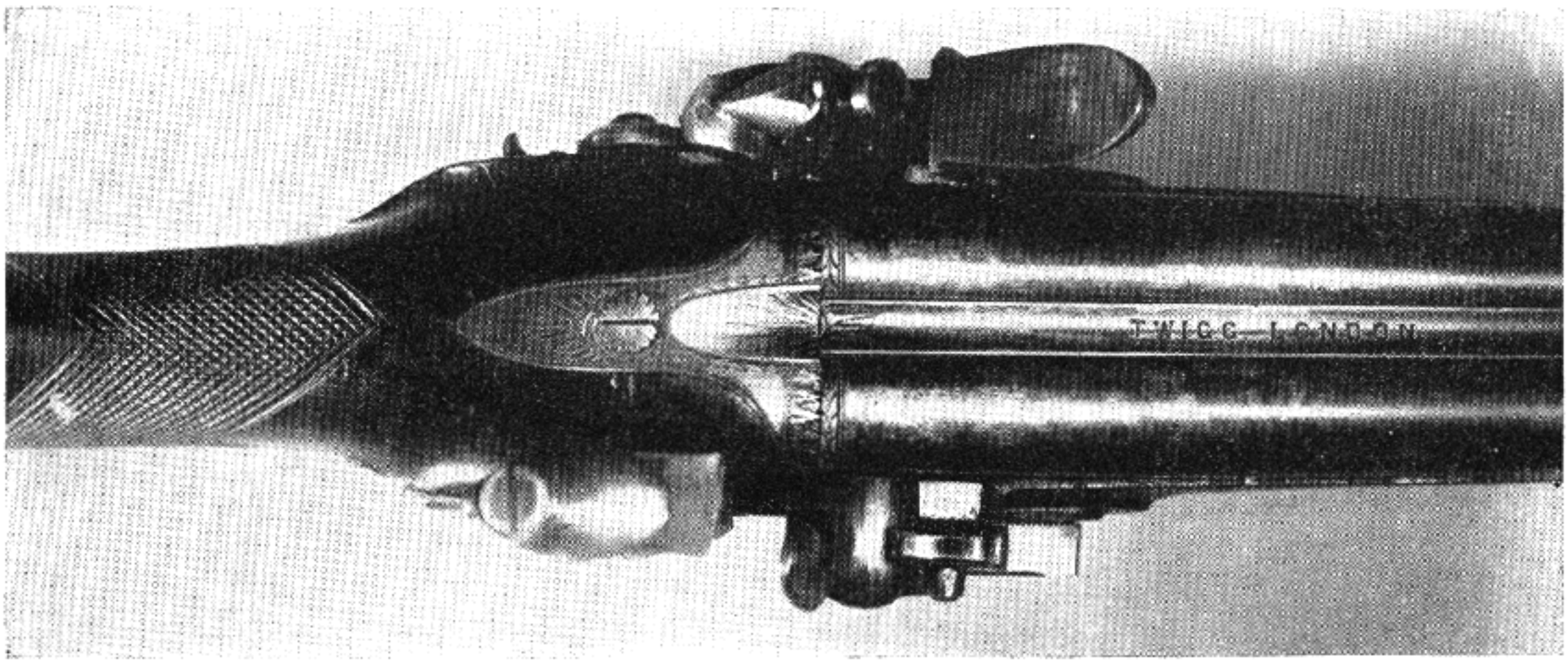

Fig. 144
Flint-lock double gun made by Twigg. Note the solid breech

CHAPTER XXV

Shotgun Repairs

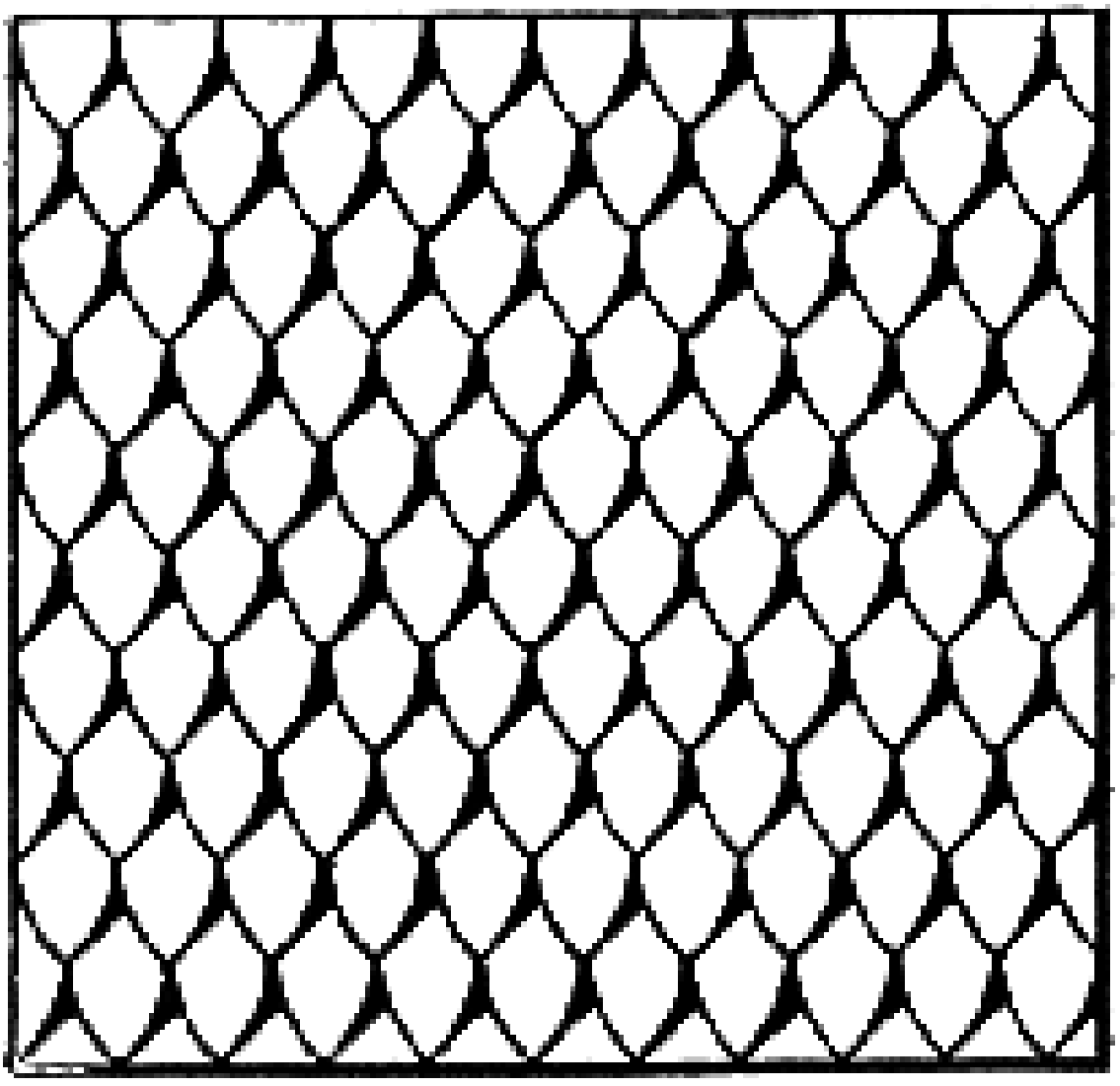

CHAPTER XXV

Shotgun Repairs

THE open season for game is comparatively short, and today there is no immediate prospect of its being lengthened. Trap shooting is admittedly an artificial means of enjoying our well-loved shotgun, but until the hawks and crows and other pests of that category pass into extinction we shall continue to experience the genuine thrill of the sport it was intended for. Because of the great variety of uses it is adapted to, it has been placed among our greatest mechanical achievements in the development of small arms. There are few articles fashioned by man for use in which more features of beauty and utility have been harmoniously blended than in a fine shotgun. The untiring efforts for improvement on shotguns in the past fifty years have added much to our knowledge of these arms, particularly those of the British makers and craftsmen. The love of beauty is inherent to a greater or less degree in us all, and those possessing the keenest appreciation can admire a shotgun every day in the year and exult in the pride of owning such a work of art.

I must be excused from trying to describe the perfect shotgun, for I would be tempted to select the arms of the British; being unaccustomed to superlatives, I shall let the reader judge these himself. No type of arm is so susceptible to refinement and embellishment as a shotgun, and it is a recognized fact that men will spend more money for such an arm than for any other, in order to have the best quality of materials and workmanship. Skilled men who build such arms are fast disappearing, and the younger generation does not seem to have the patience or perseverance to devote the years of painstaking application requisite for the title of "expert."

There is but one other human sentiment which may fairly be said to challenge our appreciation of the beautiful for first place, and that is our inborn admiration of strength and power. In our never-ending struggle upward, these qualities mean very much to us in the way of furnishing sustenance for our ever-hungry progeny and protection from co-existing nature and reality. Therefore, to insure our continued existence here on earth we must possess weapons according to our social standing among the mass; but since we have not all been placed upon this earth in equality, all of us cannot fill our cup of joy with the best. Accordingly, the makers of arms try to have a variety within the reach of every individual requirement, and he who is not so fortunate as to own the best can nevertheless own an arm that he will cherish as tho it had been made for a king.

If the student wishes to become a careful workman on the better grade of shotguns he must not only be mindful of the work on the gun, but be careful in his treatment of all work entrusted to him. Skill calls for careful application of principles, and that can come only from long hours of diligent practise upon one or more subjects; therefore, a temperate mind free from worry must be maintained to carry out some of these undertakings on the mechanical arrangements in some of our better arms. Pride must also enter into the best work on these weapons, and above all, there must be a guiding mind intent upon the fashioning of a weapon to its ideal.

Some men like to take their shotguns apart and put them together again. In a number of cases this is not requisite, for it does not in any way add to the general efficiency of the gun, particularly when the proper tools are not at hand. In some instances I have recommended removing the locks and stripping the action, but I would not advise the same treatment for a two-thousand-dollar weapon as I would for the mediocre run of shotguns. If any repairs should be necessary on a high-grade arm, and if a competent man is not within easy reach, the student himself must endeavor to make these repairs; but it is not advisable to practise on any gun that functions satisfactorily.

Because of the numerous and complicated shotgun actions made, it is next to impossible to give directions for them all in one chapter; the subject must be treated as a whole and due allowance made on the instructions given. Many shotgun actions puzzle an expert gunmaker to take apart and repair. To a trained mechanic who can study the actions as he takes them apart, however, will come a thorough and direct understanding. He will use the greatest care and forethought in every move and recognize the advantage of not marring the finish of so much as a screw head.

As seen in the instructions in Chapter XXIV, Volume I, on the cleaning and oiling of guns, many little kinks enter into our methods of working on a lock. In a side-lock gun, for example, the main spring is removed first; this is done with a gun-spring clamp or a pair of lock vises. If you do not have these tools, a clamp can be made by filing a notch or slot in a 1/8-inch piece of sheet metal, the size and width of a main spring when it is at its full compression and the tumbler in its cocked position. Slip the notched piece of steel over the main spring, release the sear, and push down the hammer. Since the spring is firmly held in the clamp, it is an easy matter to remove the rest of the mechanism.

There are numerous little untold ideas, and the student is left to solve many problems found in disassembling and assembling a gun lock, especially if the arm is at all complicated. The first consideration is that of the essential tools. These usually consist of a good set of screw-drivers to fit different-sized screw slots, padded vise jaws of felt, spring clamps, special fixtures to compress main springs in box actions; a complete set of auger-brace screw-drivers to remove screws which cannot be started with the hand tools; fine oilstones, lapping rods, fine flour emery, fine pillar and needle files, dent raisers, and various other tools described elsewhere in these volumes. Screw-drivers are the most essential tools in the list. Nothing so mars the appearance of a fine arm as the heads of screws spoiled by having a driver slip and turn up a bad burr on the head. Screw-drivers cost very little in time or money, and when made with the straight portion fitted well down into the slot, they never slip. If hand pressure does not remove a screw, the brace screw-driver may be employed. Do not hesitate to grind the point of a driver to fit some particular screw slot. If it is constructed as described in Chapter I, Volume I, these ends can be ground a number of times, as they have been made for just such purposes. If you should attempt to make or buy screw-drivers for every known width and diameter of screw head found in shotguns, your collection would mount to the same figure as a wood-carver's set of chisels—over one hundred.

Choke Boring — The student should not be misled into believing that this operation alone produces a satisfactory pattern in any gauge. True, some wonderful results are obtained in this way, but the priciples involved in producing this mystery must be better understood. The controlling factors must be made more clear, and the reason why a certain boring will give a particular pattern and why other methods will give the opposite results must be comprehended. Different manufacturers of shotguns have their own standard methods of putting chokes in shotgun barrels; some are good, some fair, and others just impossible. The last-named are the cheaper arms in which they have swaged the muzzle in order to place a choke at the end—a very crude and cheap way of doing this operation. This is often referred to as a "jug choke" by old-timers who were accustomed to handling the cheap Belgian arms which at one time flooded this country. Some owners of these arms even placed the muzzles in a vise to give the end of the barrel an elliptical form, using the expression, "To give me a slathering shot on game." I do not believe there is any topic that has been more hotly discussed than barrel choke in shotguns; even today it is not understood, nor has it been settled correctly in a number of minds. I am not going to try to argue it out, for ammunition is too strong an antagonist against any argument. The term "choke-boring" appears to have originated back in the muzzle-loading days and to have been carried to the breech-loading system with a better understanding of its merits.

To the American or British sportsman the term "choke bore" simply means that the diameter at the muzzle is less than the diameter at some point behind the muzzle, and that these bores are made in various lengths. Any shotgun barrel constricted at the muzzle to the extent of 0.005 inch may be termed a modified cylindrical bore. A full choke may be reduced to the extent of 0.030 inch. Some even constrict the choke more, but this is rarely seen on the best arms; the greater reductions are only found on the cheaper arms. After passing a certain limit in reduction the choke always defeats its main object by giving irregular patterns; often it reduces the pattern to such an extent that it does not open, except at a certain distance, which often varies. The larger the bore, the greater must be the reduction at the muzzle; therefore, we cannot use the same figures for a 20 as we could for a 12 gauge. The reduction of the bore, to be effective, must finish close to a given length, and that should be approximately 1 3/8 inches or less. When made over 1 5/8 inches in length, certain makes of ammunition must be used in order to find the best load for that particular choke. When the opposite extremes are found, such as the short choke at the muzzle, all objects are defeated, and whatever is done in trying to make various corrections only leaves a mediocre gun in one's possession. There are guns with reduction of the bore three inches or more from the muzzle which fail to throw the shots close together, but there is greater penetration than

from a swedge choke. Such a condition can be lapped out with a recess choke and will produce some beautiful patterns. Some barrels are bored oversize and still have the correct diameter of reduction at the muzzle. How often we see a man take a ten-cent piece from his pocket to see if it will enter the muzzle! Such a test does not do justice to the true conditions. It is an established fact that if a coin will go in one barrel and not the other, it tells without a doubt that one is a choke bore and one a cylinder. This test is similar to using a "go" and "no go" gauge where the limits are large but the size between is unknown. At times 0.002 or 0.003 inch makes a vast difference. Suppose that the bores of both barrels are determined by the coin method and one is cylinder and one choke. How often have you shot a barrel tested by this method and found that your supposedly choked barrel gave the poorest pattern, while the barrel which the coin dropped into gave the best! This condition is caused by overboring and can be corrected only by reloading your own ammunition and using a larger-sized wad to hold back the shot column.

When making a choke-bore barrel, the manufacturer leaves it 0.050 to 0.060 inch smaller than the gauge it is intended for; in a 12 bore, the bore is left about 0.690 in diameter. The barrels are bored within three inches of the muzzle with a standard boring tool, using a piece of white pine as a "sprill" and paper liners to bring it up to the desired size. The tool, however, is allowed only to come within the specified distance and then withdrawn. This is rather a tedious process, it being rather difficult to remove the metal from that part of the barrel nearest the muzzle. After sufficient metal is removed with the boring tool another boring tool with a taper on the end is inserted. This tool is of a different nature from that of the boring bit; it is chamfered off toward the point in order to give the desired shape to the cone of the choke and the flat between the top of the choke and end of barrel. By the use of such a tool the choke is kept perfectly straight and true with the barrel. This operation is not used by all shotgun makers—some bore the barrels to the desired choke size and use the same tool to bore out the barrels to the gauge required.

It is the practise of the manufacturers of cheap shotguns to bore the barrels cylindrical, or nearly so; then reduce the muzzle from the outside by forcing the end into a die until the internal diameter of the muzzle is about 0.040 less than the bore. This is a very cheap way of accomplishing the desired results, and is therefore regarded as a makeshift plan. Nevertheless, the barrel is choked, which answers for a lot of defects in other parts of the bore.

After the rough-boring operation takes place, the fine-boring follows. Of all the processes the shotgun barrel passes through in the course of production, fine-boring is the most important, as upon its proper finish the shooting of the barrel is entirely dependent. The term "fine-boring" is included in all that is done to the inside of a gun barrel after the rough-boring previously described, and enough is allowed for this operation. The operations are as follows: rough-turning of blank, drilling, reaming, turning, rough-boring, choke-boring, fine-boring, chambering, lapping or final polishing.

The fine-boring by which the inside of the barrel is enlarged to the required bore size, allowing enough for the final lapping operation, is done on a reaming machine. Various manufacturers have special machines which have been in use for a number of years. The tool, however, revolves at scarcely half the speed of the rough-boring reamer, and cuts on one edge only; whereas, the rough-boring and choking tool cuts on two sides. The tool is made to fit the barrel by means of a piece of hard wood packed with strips of paper between the wood and tool to fit the bore. This makes a scraping cut, removing only 0.002 inch on each passage of the tool into the barrel bore. A free supply of the best lard oil must be used as a lubricant, not only in this operation but in every operation where a tool of this nature is used. By using the same tool with additional packing it can be made to bore several sizes out of the barrel. The tool has but one sharp edge; the other is rounded and stoned to a high polish, which acts as a burnisher, while the two remaining edges are prevented from touching the bore by the wooden "sprill." The amount of "cut" is regulated by the packing, usually one paper liner inserted between the tool and the wood; the thickness of that paper is determined by the amount desired to be removed each time between the bore and the tool when the bit is next inserted. The tool is ground square, as Figure 55 illustrates, and is fifteen inches long on the cutting sides; this length centers itself better in the barrel and also has a tendency to keep the bore straighter. The tool turns in these operations and the barrel is held stationary in a fixed carrier which has considerable freedom on the head of the carriage. The tool fits quite loosely in the head, in that way acting as a floating reamer.

After the barrels are bored to the desired size they are chambered. Two reamers are used, one roughing and one finishing, but to obtain the finest chamber and cone, a burnishing reamer should be employed. Make them to the desired chamber

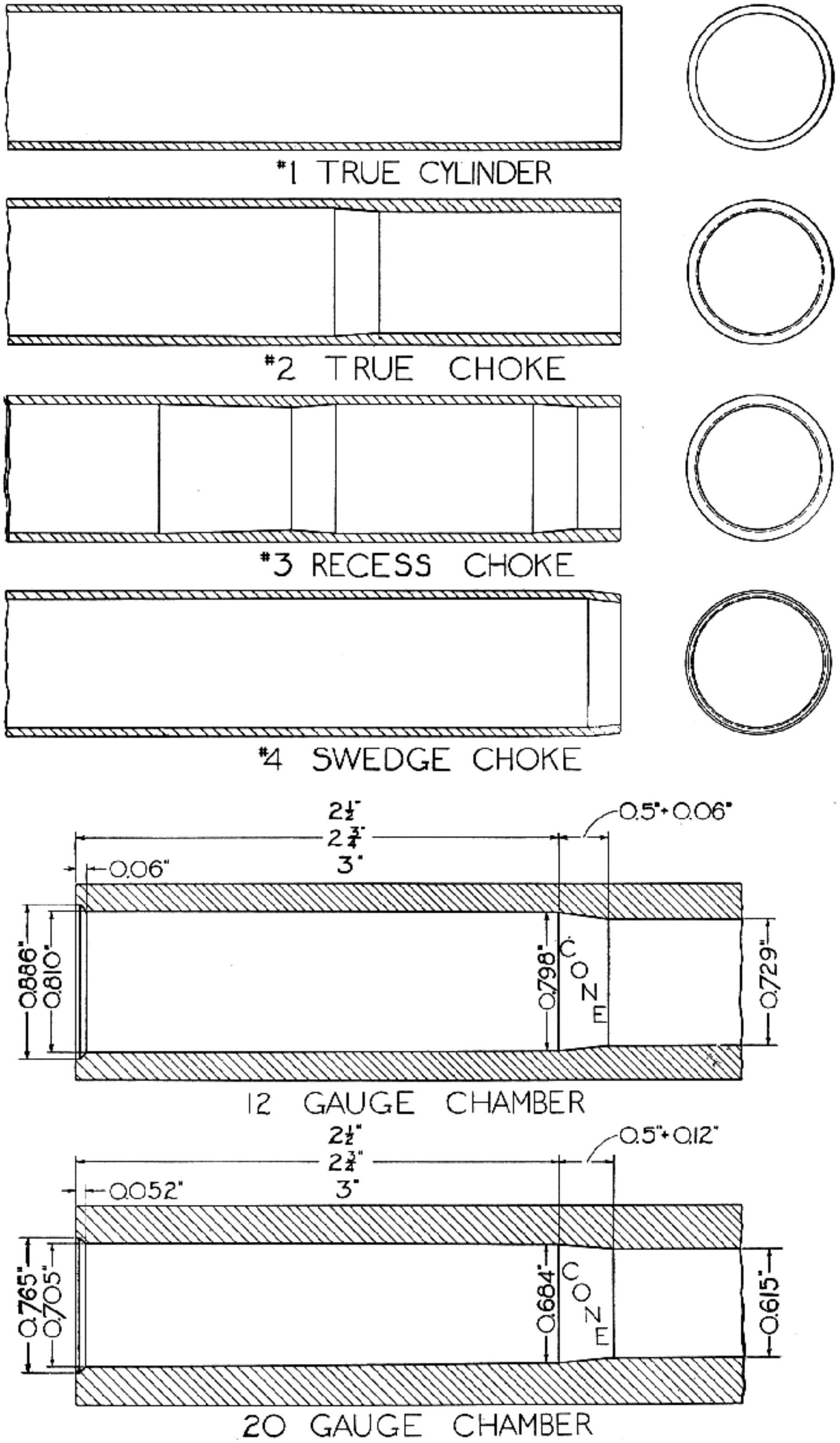

Fig. 145
Barrel chokes and shotgun chambers

diameter and for the gauge intended. The chambering operation is accomplished in a lathe with the dead center placed in the center of the reamer. The reamer is turned with a tap wrench and gradually forced in with the tail-stock screw. The chamber and cone must be in exact line with the bore of the barrel; so the reamer is provided with a pilot which projects ahead of the cutting portion and centers itself in the bore of the barrel, which it must fit with about 0.0005 inch clearance between bore and pilot. Often a bore is left 0.006 inch smaller than the standard size in order to try for closeness of pattern; whereas the chamber is always to one size and the pilots of the chambering tools must fit the bore of the barrel. When that size is made a standard to test by, it will be the smallest size ever to be required for testing purposes; whatever is taken from the bore is obtained by its final finish, completing the test after the gun is finished or before the bluing operation takes place.

The proper shape at the end of the chamber, which is a gradual taper into the bore, is called a "cone." Different manufacturers have various lengths of cones, some short and some rather long. The correct length is about $\frac{7}{16}$ inch. Figure 145 illustrates a 12 and 20 gauge chamber in which a tolerance has been given for the cone; this is a flexible length, hence the large variation. A cone should never be made abrupt; at times a much longer cone is required, but it should never be any shorter than the given length.

How many barrels do we come upon that seem to have a perfectly straight bore from chamber to choke, or to muzzle, aside from the finer shotguns where great care has been used in the lapping operation? What is known as a true cylinder bore is a barrel that is not "choked"; that is, there should not be any point between the barrel and chamber, nor should the end of the cone to the muzzle have any variation in size. If any, it should never be more than 0.002 inch in different places throughout the entire length.

Figure 145 illustrates the four usual forms of "choke"; No. 3 is the "recess choke" in a choke barrel which is often seen in a number of foreign guns. No. 4 is the "swedge choke" or jug choke found on cheaper arms. The only method of producing No. 1, the true "cylinder," is by the lapping operation.

The final polish to the interior of the bore should be a mirror-like finish instead of just a polish such as we see in the bore of almost all guns completed with the finishing tools and never lapped. This mirror-like finish of the barrel, to which regularity of shooting is due, is produced by a process which very few manufacturers use except on the best-grade guns, for it entails an added expense. A barrel highly finished will be known by the remarkable closeness of its shooting. Such barrels are obtained with a long lead lap coated with fine flour emery and paraffin oil as a lubricant. This process may be accomplished with the aid of the same reaming machine that is used for reaming or boring the barrels, except that the speed must be increased. A lathe may also be used for this operation by constructing a special holder to be fastened to the compound rest. As the lap is passed back and forth through the barrel from end to end, a perfectly true, highly polished surface from chamber to choke is obtainable.

The lap is cast on the end of a cold-rolled steel rod and then turned to the required bore diameter. The lap is kept constantly covered with emery and oil. After every little tool mark is removed a new lead lap is cast upon another steel rod and this is used with rouge or Vienna lime and oil.

As the barrel is fixed on the carriage of the reaming machine or lathe and the lap is inserted and set in motion the barrel is moved back and forth very slowly along the revolving lap in order to form the inside surface perfectly and remove any slight inequalities that may have been left by the finishing boring tool when this operation took place. It will also finish it as finely as possible, which is necessary if high-class regular shooting is to be obtained in the hands of good shots. Such a lapping operation renders the barrel more easy to clean and makes it less liable to lead or even foul. Too much care cannot be given to this operation, owing to the speed at which the lap revolves. A barrel being bored very thin at the muzzle is apt to bend out or the ribs may be loosened or twisted because of the heat generated by the lap, so during this process water should be freely applied to keep the barrels cool.

After knowing the methods and principles used for choke-boring a shotgun barrel, the next problem is to know the proper results of the efforts applied to accomplish these various patterns. As an example, let us suppose that the gun is more or less choke-bore; to dispense with any choke in one barrel is to sacrifice efficiency, for choke-boring is the only method by which the outward expansion of the shot can be controlled. The amount of choke best suited to any shotgun will depend upon the particular thing for which the arm is to be used and the skill of the user. A trap gun does not require the full choke which most of them have, yet it needs enough so that the gun can be shot either on the 16- or 28-yard line, and give a good pattern. When deciding the amount of choke, it must be

borne in mind that the pattern shown on any target does not fairly represent the position of the shot at any gun mount. Assuming that a certain ammunition has been found best suited to the choke, some individual velocities go ahead while others lag behind, and so actually the pattern is never exactly what the target represents it to be. A full-choke barrel is for sizes better than a cylinder; that is, a barrel much larger would be needed to shoot a heavier load and so make an equal pattern; therefore, at long ranges a larger barrel and heavier loads could never equal a choke-bored barrel. Unfortunately, this is only found when great care has been given to the interior finish of the barrel, and a number of trials are sometimes required to find that performance on the targets at various distances. The principal advantage of a true cylinder bore is that it possesses a larger killing circle up to 20 yards, and beyond that range the second barrel must come into play with a choke to vary for the purpose intended.

Many men picture the shot column as passing through the choke or constriction in its original form. This does not actually happen. Spark photography showing shot charges emerging from the muzzle at various stages of their flight prove that the shot column is completely intact, the individual pellets of the charge having been acted upon directly or indirectly by the taper walls of the choke shown in Figure 145. The original formation of the charge has been changed and the initial direction of its movements, especially regarding the outside pellets and those adjacent, has been altered. When the charge begins to expand as shown in photographs, the breaking up is not due entirely to the action of atmospheric pressure, but also to the fact that the pellets which were originally at the bottom of the column have been deflected toward the top. Those to the right taper to the left or vice versa; therefore, each individual pellet that makes contact at the tapered choke is deflected from its original direction of flight, and these deflected pellets change the course of the pellets near them. The result is a closer grouping of pellets than could ever be had with a true cylindrical bore. A cylindrical bore tends to expand the shot upon emerging.

It is agreed that the last influence the barrel has on the shot column is at the choke, and it is evident that the tapered part of the choke deflects the pellets from the straight line of their original flight and causes them to cross the line of aim and strike the paper on the opposite side from that which they occupied in the gun barrel. It is further evident that some of the pellets in the center of the load are not affected by the deflecting disturbance caused by the passage through the choke, and these pellets carry nearly true to the center or in a straight line. All this explains why an overchoked gun makes a poor pattern, or too acute an angle to the leed, making the flight of the outer layers of pellets expand and consequently causing open patterns.

The mathematically inclined student can prove with figures, the action of the angle on shot charges, if passed through a choke, as shown in Figure 145, No. 2. Take a 12-gauge barrel as an example, with a 2.5-inch length of choke; the taper leading to the cylindrical portion, we shall say, is 1.5 inches. The bore of a 12 gauge is 0.729 inch, while the cylindrical section of the choke is .695 inch, giving a total constriction of .034 distributed over the 1.5-inch length of taper. The taper on one side would be 0.017 inch, or half the total constriction of 0.034 inch. A 40-yard range contains 1,440 inches and is 960 times the length of the taper (1.5 inches); however, the deflection at the target would be 0.017 inch multiplied by 960, or 17 inches from the center of the pattern. Therefore, if one shot pellet could be fired from a shell, and it followed along the surface of the bore, it would be deflected upward when it reached the tapered leed, and would strike the target approximately 17 inches above the center of impact of the full-shot charge. This illustrates, in theory, the tendency of the choke, leed, or taper, to influence the direction of flight of shot pellets. All inside pellets are given this deflection by the choke; however, many of them are acted upon by other forces, which to some extent counteract this effect of the choke. Fine patterns are possible from a full-choked barrel, finished by the reamer and not lapped, but only for a few shots, no matter how perfect the reamer or how fine the boring tool has left it. Tool marks will gather sufficient lead to produce irate and patched patterns when chilled shot is used, and after that trouble starts. Friction then takes place. The shot column against the inner surface of the barrels, up until the time it reaches the taper or beginning of the choke, is intact. But in the portion of the bore directly in front of the choke or restriction, friction is considerable and causes leading. The introduction of copper-plated shot will minimize the leading, as the copper coating forms a hard outer surface, and a good many charges can pass through a barrel before the copper deposits will equal the deposits of lead left by the few loads of old-style chilled shot. Lapping must take place until a mirror-like surface is produced in the choke and taper to eliminate any lead fouling.

From this simple explanation, the student should

acquire a basic understanding which will enable him to experiment with the various degrees of choke boring; for, as we know, actual experience is the greatest of masters. If you are interested and intend to pursue the subject further, this elementary knowledge will endow you with a clearer conception when other more detailed books are read.

Loose Actions — The usual advice given when an action has become loose on the hinge pin or bolt, is to peen the cut-out or make notches in the lumps. This is good advice to follow when a cheap gun becomes loose at any of these points, but to do so on a fine arm is unpardonable. Those who wish to accomplish a peening operation on shotgun lumps may do so to tighten the joint, but there are better ways of completely tightening any loose joints between the body of the action and barrels. The jointing consists of fitting the barrels to the action. This is a matter of importance, for the life of the arm and also the "safety" depends upon these joints being tight. A properly joined gun will seldom shoot loose. The fitting of barrels and action requires many trials in order to bring the parts together to bear evenly against the standing breech, and the flats upon the barrels must be firmly bedded upon the action's bottom face. The spotting-in is done with Prussian blue and must be repeated many times until each surface fits evenly and closely against the other part.

If an action is loose, the best plan is to fit a new hinge pin, that is, unless the bolt requires fitting also. Some hinge pins are fitted into the frame while others are screwed into the opposite side to hold them in place. After pressing or forcing the old pins out it is usually necessary to anneal the action and case-harden it again. Before the annealing takes place all parts must be removed from the action and heated in a box or pipe containing lime or charcoal. The contents are heated to a cherry-red and allowed to cool in the container. If the action were thrust directly into the furnace flame, the metal would be more or less scaled because of oxidization.

When the action is ready to be worked on, re-fit the barrels to the action; use Prussian blue on the flat bottom portion of the barrels and the face; then spot this in, removing every little high spot with a fine pillar file at the bottom and face of the standing breech. You may find it necessary to use small scrapers for this operation as well as the fine files in order to remove spots which can not be conveniently removed with a file. When completed, clamp the barrels very tightly together and ream out the hinge-pin hole with a reamer which will remove sufficient metal to make the joint in the lug true and round. Sometimes the barrels and action can be clamped together and the hinge-pin hole lapped so that a perfect bearing surface is secured without annealing the action, which should be avoided whenever possible, unless the student has the equipment to re-case-harden the action correctly. First, try to lap the hinge-pin hole before annealing the action; however, this is usually done by the manufacturer of the arm rather than the gunsmith or student. By lapping this hole the complete removal of the high and low spots takes place, and when the new pin is fitted, it has a perfect bearing surface upon the entire radius in the lump.

The use of small scrapers, as suggested, to remove high spots that cannot be removed with files, requires considerable practise; it would be well for the student who is about to perform such an operation to practise on sample pieces of steel before attempting the scraping of an action. Scrapers can be made from old pillar files by grinding off the cuts on the end. It is then necessary to draw the temper to a dark straw or purple in order to maintain the edge. The square flat sides must be stoned to a keen cutting edge and kept that way by the free use of oilstones while in the act of scraping down a surface. Much care must be exercised in the use of any scraper to keep it from digging into the metal. Only remove a fine scraping cut over the point in which the metal is to be removed, and no more. I would not suggest a scraping operation if a file can be used.

The removal of the old hinge pin is often a rather difficult job, and if it is to be pressed out, a special wedge must be made to fit the action channel so that the action will not be sprung when pressure is placed upon the pin. A special steel block must be made so that the action will be at right angles to the pressure applied, and a hole of sufficient size made to allow the pin to pass out freely upon its downward travel. Nearly all hinge pins are put in from right to left and removed from left to right. In some actions small screws are placed in the pin to keep it from working out. Some are applied from the end radius while others are placed in from the flat of the action. These screws should not be forgotten and their removal should take place before pressure is placed upon the pins. When such screws are discovered the hinge pins are usually screwed into place, but before the removal of any, ascertain the method used to fit them.

A new hinge pin should be made of good tool steel or alloy steel which has strength and density. Turn the pin about 0.0003 inch larger at the bearing surface of the radius, and if it is to be a press-fitted pin, allow about 0.0005 inch larger. If it is

to be a screw-fitted pin, allow at least a one inch shank so that a lathe dog can be fastened to one end and a perfectly tight thread fit can be made together with shoulder bearings. When the pin is placed very tightly in the hole, screw up the shoulder with all pressure possible, scribe the outline of the action on the pin, and under-cut to a depth so that sufficient strength remains to reset it again in the hole. Place a prick-punch mark on the north and south sides of the pin, allowing a slight angle; this is the true screw slot which is to be milled out with a fine slitting saw or fine hack-saw blade. The threaded end should project so that when it is faced off no center will show. After the screw-driver slot is milled in the head, the pin is set back in place and filed to the form of the action, and likewise on the threading portion. After both ends are finished and engraved, the pin is hardened in oil and the temper drawn to a dark blue over a steel plate or in fine sea sand, and then set in place to remain. The slight angle given to the screw-driver slot can now be pulled straight in line with the action by a brace screw-driver and pulled up tight by enough force so that it will never come loose. The 0.0002-3 inch oversize of the pin will give a very tight fit on the radius, and also when the action is opened or closed. This must be done a number of times to free the radius on the pin, but after fifty or a hundred shots are fired it will be at its proper set.

The bits, or grips, and bolt are next inspected. After the hinge pin is fitted there may be a little movement up and down between the barrel flat and action after the top lever is completely in its locked position. If so, a new bolt must be made or the slots filled in and new ones located on the lumps. A common method often recommended is to force the slots together. This is perfectly satisfactory on a cheap shotgun, but I do not advise such methods for those who wish to do better work. Careless quack ways often ruin a gun, so if the owner takes pride in his work he will never do such a shiftless job, even on a cheaper gun. Figure 146 illustrates the correct method of doing this work, which is

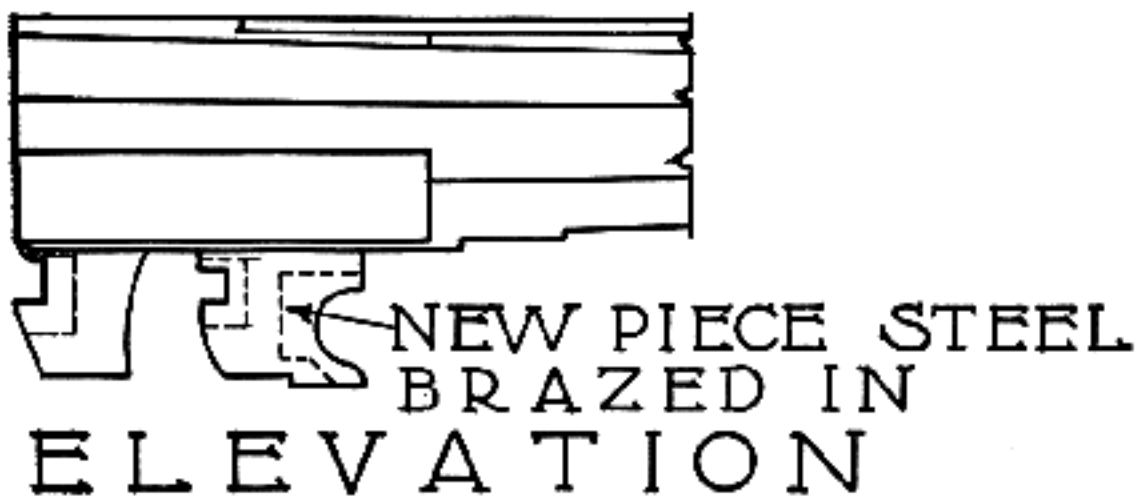

Fig. 146
Methods for making insertions in worn parts of shotgun lumps

filing or machining these slots out 1/8 inch larger at top, bottom, and front, and making and fitting in a steel block. The dotted lines show these; the steel pieces are brazed into place and then new slots are filed out. In this operation, extreme care must be taken to have the bottom bolt enter evenly and with a perfect bearing surface. The bits or grip in these slots must be so that the bolt fits very evenly and squarely with a pulling-down action which will equalize the strain. A crooked, worn, or badly fitted bottom bolt is very apt to break, since it would have to stand the whole strain of the explosion. Therefore, this must be thoroughly inspected before the slots are filed out; whereas, in a well-fitted bolt the strain would be borne by the slots in the lumps as well as the bolt itself.

With the barrels joined to the action and adjusted as perfectly tight as the day the gun came from the manufacturer, you know that the job is well done and complete. On all the best guns, the ejector mechanism must be gone over. You may have made a slight change when fitting the other parts, and since the successful working of the arm depends wholly upon the accurate adjustment of the various parts, the firing and extracting mechanisms sometimes have to be refitted and made to work in more perfect harmony with the other parts.

Barrel Work — If the instructions in the first part of this chapter are beyond the comprehension of the beginner who has never had any mechanical training whatever, it will be well for him to begin his training with some of the more simple methods before he advances to the most complicated work. Start with cutting off the barrels of a shotgun if the muzzle has been damaged or an end has been blown off because of some obstruction in the bore, replace sights, lap a recess choke in cut-off barrels, fit ends of sawed-off barrels, and resolder the ends of double guns, etc.

Cutting off shotgun barrels at the muzzle removes all the choke in the end of the barrels, especially if very much is removed back from the muzzle. If only a small amount is removed and the gun you are about to perform this operation on is choked a considerable distance back, then a part of the choke remains, which is better than no choke. Regardless of choke you still have in your possession a shotgun, but if a muzzle is badly damaged it is worthless until the damaged end is removed.

With a combination square set against either the right or left barrel, scribe a line straight across each barrel; then reverse the barrels and do likewise, only connecting the top lines at right angles. These are the lines used as a guide to saw the barrels, for which a fine-tooth hack-saw blade is used. Hold

the barrels in a vise between padded jaws in a horizontal position with the chamber end supported on the gun brace. If the barrels are very thin, small pieces of wood must be made and placed between the top and bottom ribs and then clamped in the vise. Many a fine barrel is ruined by applying too much pressure on the barrels, particularly when they are very thin. After the barrels are sawed off, use a small knife-edge square and file the ends with a small mill file, test for square in every position, and solder the gap left between the ribs. The inside of the barrels and also the ribs must be filed off smooth with a fine needle file that can be used in all corners. This is done so that it is possible to tin the ends and have the solder adhere. Cut out a piece of tin to the exact form between the barrels and ribs and drive it in place, about 1/8 inch from the end. It is placed in this position so that no solder will run down between the ribs and barrels. A heated soldering iron will close this end; allow a small amount of solder above the top and bottom rib. After being filed down, a continuous flat surface will exist between the barrels. Polish the end with fine emery cloth wrapped around the file and use the emery cloth in one direction only; complete the finish with a piece of crocus cloth in a similar manner.

For the front sight, drill a new hole in the exact center of the rib about 3/16 inch back from the muzzle. Some shotgun sights are driven in on a taper and others are screwed into place. The former method is the most commonly used by shotgun manufacturers because of the simplicity with which they are driven in at a given depth; whereas a sight which must be screwed into place is more or less marred by instruments. It is necessary to place it a given distance from the top of the rib and have it tight at the same time. New shotgun sights which are purchased from the manufacturer have an instruction sheet together with square reamers to enlarge the drilled hole so that they can be driven in at any depth. Figure 147 shows a standard set. One particular point which must be

Fig. 147
Lyman front and rear ivory shotgun sights

taken into consideration when these sights are set in place is to have them in the exact center of the rib. A diemaker's square is used to locate the true center, a small center-punch mark is made, the hole is drilled and reamed, and the sight driven into place.

After the barrels are shortened, it will probably be desired to have a choke in one or both barrels again. To make a recess choke—like that shown in No. 3 barrel in Figure 145—is very simple. As large a one as this is required, but be sure to have a length in the recess as long as the shot column. This is easily measured by removing the shot from a case and giving the same length to the choke that you are about to make.

The best fixture or head to use for this operation is a dental polishing expanding mandrel in which small pieces of glued circular emery cloth are used on a rubber expanding head and then inserted in the breast-drill chuck or used on the end of a motor. It is possible to expand the rubber emery-cloth keeper to any desired size by just tightening the knurled nut. Place a mark on the spindle to the depth you wish it to go in from the muzzle. Since the circular discs of emery cloth wear rapidly, keep the expanded head well against the walls of the barrel. When such an expanding arbor is used on a motor this recess can often be cut out very quickly, but if you only have a breast drill to perform this operation with, it is a rather tedious operation; still, with patience it can be performed easily.

At times it is not possible for the student to obtain one of these dental polishing heads and he must make his own expanding polishing arbor from a piece of hard wood. Take a piece of beech or white maple and turn out an arbor on the lathe or cut it out by hand, one end to fit the breast-drill chuck and the other end made to a diameter which will fit the end of the barrel after the emery and rubber bands are built up. On the end which holds the emery, drill and counter-sink the center, and screw into this a common flat-headed woodscrew. Then with a fine hack-saw or a coping saw, split the end two ways a distance back which will allow for expansion. Stretch rubber bands on the end and build up to a diameter which will just enter the barrel. Coat them with glue, roll the rubber bands in No. 90 or 100 emery, and allow to dry. Flour of emery is used for the final finishing laps. It will be well to make six or eight of these, as they are simple to make; as soon as one wears out, it should be replaced with a new one and also re-coated with glue and emery. By the time the last one is completely worn out the first one will be dry enough to use. With one end of these laps tightened into the breast drill, chuck and also mark or ring for the correct distance. As you are turning the drill, rapidly working it back and forth, a considerable

amount of metal can be cut out; but just as soon as the emery wears down and the rod becomes loose, withdraw it and tighten the screw on the end and then insert it into the muzzle again. Measure the recess frequently with inside calipers, carefully transferring and checking the measurement with the micrometers and comparing the measurement with that of the one taken before the operation was begun.

The rounded ends of the laps will give the correct rounded taper to the front and rear of the recess. The polishing operation should continue until the recess is enlarged 0.010 inch larger than the diameter of the bore. The direct object of this recess at the muzzle is that when the shot column strikes it, it expands enough so that when it hits the choked end it will have sufficient contraction to give the desired choke effect. The length of the straight portion should never be less than one-half inch. Be careful not to lap any metal out of the end, for this is the place where the diameter must hold, and when inserting or withdrawing the lap do not allow it to revolve.

The gun must be patterned often to see the results produced by your efforts. If patterns are not understood by the student it will be well to give a brief outline of the methods generally used for these tests. The diagram made by the pellets fired at a sheet of paper (48x48 is the usual size) is the "pattern" of the gun shooting. To ascertain the arm's shooting power, all the student needs to do is to fire at one of the large sheets of paper with one of the standard charges used for its gauge. For comparison with other results, the number of pellets striking within a thirty-inch circle may be taken to judge the shooting of the gun. A good close pattern is always a guaranty that the arm will have sufficient power to kill; the greater the mass of the shot or pellets, the closer is the pattern. No close-shooting arm has inferior penetration; therefore the nearer each pellet mark is to the common center, the less will be the distance between the first and last shot of the charge. This is the usual meaning of a close pattern. A bad or patched pattern proves a number of things; either the gun is improperly bored, the choke is not right, or the correct load is not found for the individual gun, etc. The closer the pattern is at forty yards, the longer the killing ranges of the arm will be with the intended load. I could devote much time to the subject of various patterns secured by altered chokes, but as space does not allow me to go into detail, I shall let the reader carry out his own test from his own angle, of loads from various gauges, securing patterns and killing circles which may be approximated.

It has been suggested to use an expansion reamer in the muzzle of a shotgun barrel to enlarge it and produce a larger pattern. Whatever you do, never thrust any form of expanded spiral or hand reamer into the muzzle of a shotgun. The only tool to use for the enlargement of a choke is either a shotgun choking bit or a fine finishing tool; or if it must be a reamer, a burnishing reamer. These are very expensive to make and the greatest amount which can be removed with one reamer is 0.002 inch, so it is much better to use the lapping operation as given in Chapter XVIII.

Removing Dents from Barrels — It is very easy to get a dent in a thin shotgun barrel through a fall or other cause. It is not advisable to shoot a shotgun if it has a very bad dent, because it is liable to split the tube when the shot strikes the bulge. Dents are easily removed, however, if one has the correct dent raisers to insert in the barrel and force the metal out again to the surface. Figure 148 illustrates three standard plugs; one is solid and the other two are adjustable forms working on a taper. In the same drawing the standard figures are given for each shotgun gauge which should be a standard for all shotgun bores, but because different manufacturers do not adhere to these sizes it is much better to use the adjustable gauge. The straight plug gauges are made in sets varying 0.002 inch in diameter, and as the figures given in *A* are the standard size of barrels, the variations must be minus from these figures. As an example, for a 12-gauge plug the maximum size would be 0.729 inch; the No. 2 size then would be 0.727 inch, and so on down until you have a set of eight plug gauges varying 0.002 inch, and the smallest would be 0.715 inch, which would be the starting plug.

In using the adjustable plug it is necessary to have a solid plug gauge to start out a bad dent; the adjustable taper gauge follows. One must be very careful with these taper gauges, for a great amount of pressure can be placed on the wedge effect which will bulge the barrels out and make it difficult to bring them in again. Either style of dent raiser must be made of tool steel, hardened-ground and either lapped or polished. A true cylindrical surface free from grinder or tool marks will not place elongated scratches in the bore. Hours of labor are spent to secure this mirror-like polish which can be destroyed in a few minutes, and to remove such marks will often take a long time with a fine lapping operation. The drawing in Figure 148 is self-explanatory. Two flat pieces of tool steel are tongued and grooved on the shaper or milling machine and the tongues and grooves sur-

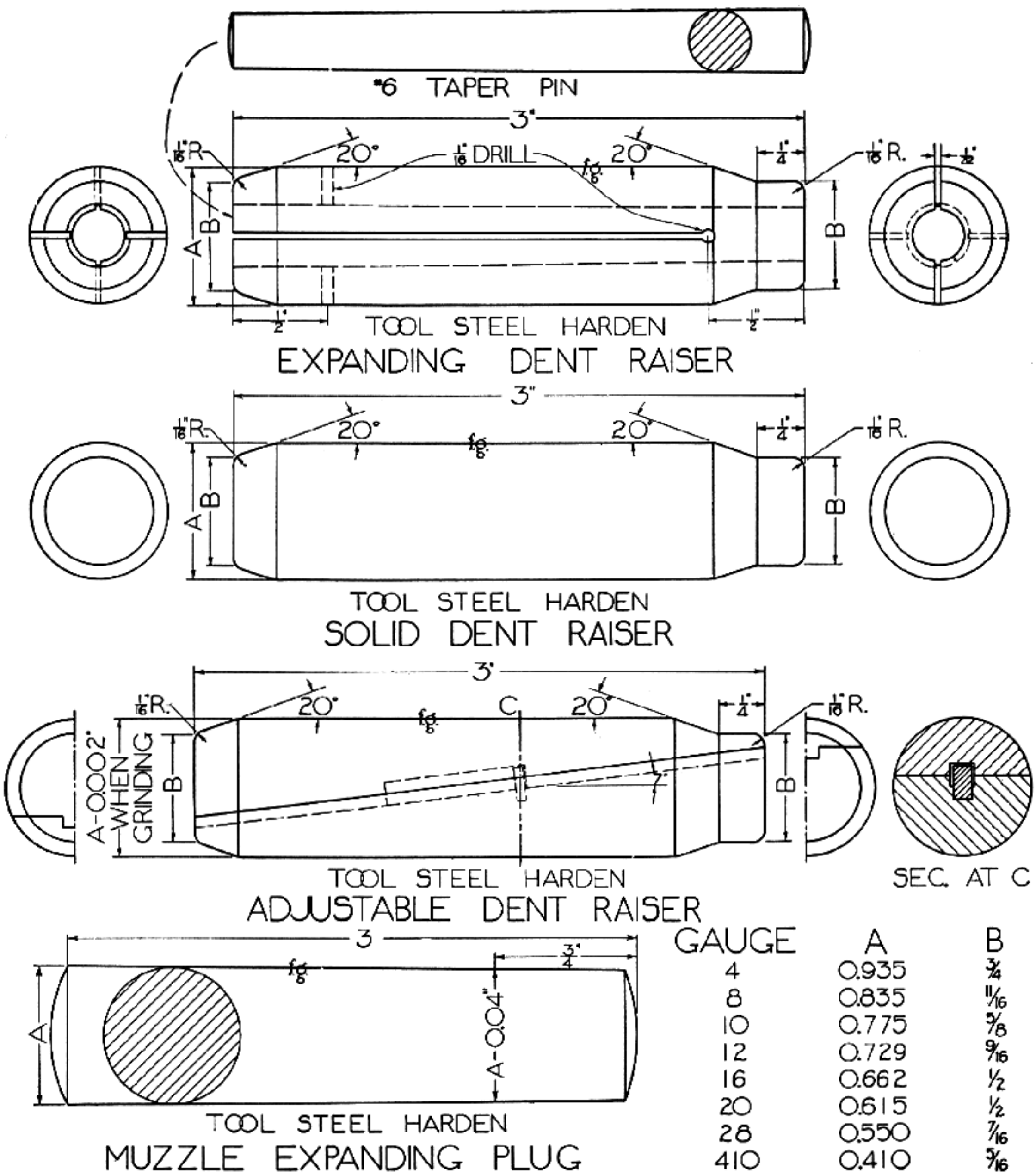

GAUGE	A	B
4	0.935	3/4
8	0.835	11/16
10	0.775	5/8
12	0.729	9/16
16	0.662	1/2
20	0.615	1/2
28	0.550	7/16
410	0.410	5/16

Fig. 148
Shotgun barrel-dent raisers

face-sweated together. The length should be left 1¼ inches oversize so that it will be possible to fasten a lathe dog to turn and grind the plug. Center the two pieces so that they will have between a 10 and 12 degree incline to the tongued and grooved section. Turn the plug in the lathe on center, allowing about 0.015 oversize for the grinding operation. Neck in the two ends so it may be broken off after they are completed and grind off the broken sections straight across the ends.

To harden, heat the two until they can be broken apart, and then scrape off the lead. At this stage it is well to place the pin in position as the dotted lines show; it is not necessary, but is placed in this position so it is possible to drive the wedge only a given distance. After the hardening operation takes place, the tongued and grooved surface is polished and the flat portion again sweated to-

gether. Use sufficient heat to just melt the solder, and bring them into the exact position as when taken apart. Grind to size and polish the outside diameter to a mirror finish. Heat the gauge again and remove all traces of solder. To use, place the raiser in the barrel, and hold a rod against both ends. As the gauge is inserted to its smallest size, place the raiser over the dent, hold one end with the rod from the front, and expand the wedge from the rear, which action pushes out the dent. A lead or fiber hammer should be used to tap lightly over the dent to even the outside surface of the barrel. If this operation is carefully done there will be no apparent indication of a mark upon the outside or inside of a barrel. A set of these dent raisers for the different gauges of shotgun barrels, hardenground and lapped to size, is indispensable to any one doing very much shotgun work. They are invaluable not only to the gunsmith but to the man who happens to have a large collection of shotguns. It is such an easy matter to remove a dent with these that a set pays for itself in a short time.

The simplest method of removing dents is to make the dent raisers from fiber. Figure 148 illustrates a steel tool; turn the plug from a bar of round red fiber to the intended gauge, and also drill the center and ream it with a No. 6 taper-pin reamer. Use a standard No. 6 taper pin, which is carried in stock by most hardware dealers. When the center is reamed the pin should extend from the end at least one-half inch to allow for expansion. After the plug is removed from the lathe, it is drilled in four places; one-half inch from each end. The opposite holes on the other end of the plug should be 90 degrees from the other two. With a fine hack-saw or slitting saw on the milling machine, split the plug up to the holes from the opposite ends; when completed, there is only a web holding each end, and when the pin is inserted, expansion takes place evenly against the walls of the barrel.

A steel plug can also be made in the same way by hardening and grinding the outside. A dent raiser made in this manner is equal to the wedge raiser shown in the same illustration. If the student does not wish to go to the trouble of making the expansion plug from fiber, a set of plugs can be made like the one of solid steel shown, just as good as the hardened and ground plugs. This soft material will not harm or scratch the inside of the finest barrel. To use the expansion fiber dent raiser, thoroughly wipe the barrel out so that there will be no foreign matter to adhere on the fiber plug. Insert the plug with the pin in position, and with a piece of brass tubing place the plug over the dent. By inserting a solid piece of the brass from muzzle and a solid brass rod from the breech, the taper pin can be driven into the raiser, expanding it to such a degree that the dent will gradually raise to the surface. As this takes place, the outside of the dent is lightly tapped with a lead or fiber hammer to smooth out the surface and at the same time expand the metal around the dent so that it will come out even and smooth. This operation requires great care, for if too much pressure is placed on the pin, the expansion will raise the surface of the barrel on the outside, as with the wedge raiser.

Many times a muzzle is dented or crushed in; the only way to correct this is to drive a muzzle-expanding plug in from the breech end of the barrel. Figure 148 also illustrates one of these plugs which is made on a taper and will take care of any barrel except those having a cylinder bore and greatly oversize. In such rare cases, a special plug is used from the chamber end and driven into the muzzle; as the plug is gradually tapped against the crushed end of the muzzle, tap the end of the barrel with a lead or fiber hammer to secure an even and gradual expansion of the metal to bring it back in place. Such a plug will evenly expand any badly bent-in muzzle, but it should never be inserted from the muzzle end because of the taper on the plug; it allows the end of the muzzle to become bell-mouthed, and such a condition will affect the pattern undesirably.

Special Ribs on Single Barrels, Etc. — I receive various inquiries for solid and ventilated ribs to be placed on gun barrels, but usually when the owners are informed of the work involved they use the arm with a rib, or try to place one on, especially if they have machine-shop equipment to do such work. A solid or ventilated rib can be placed on any gun barrel, particularly the ventilated type, as this rib is the easiest to work on a barrel and at the same time the most satisfactory in appearance. Barrel ribs are made between ¼ and ½ inch in width, and the material mostly used is cold-drawn steel, machined to fit over the top of the barrel. The usual size of steel a rib is made from is ½ x ⅜ inch for shotguns, and ½ x ½ to ½ x ⅝ inch for rifles. Correct measurements must be made and the barrel and rib first drawn up on a sheet of paper; make it full size, and when these measurements are made in detail they must be adhered to throughout the machining and filing operations.

The best way to ascertain the correct height of a barrel rib when placed on the barrels is to take the length of barrels and from this length your figures. Different lengths require difference in the height of ribs. As a general rule, forty yards is the distance that any shooter fires at a given object,

and at this distance a heavy charge of shot will drop about 12 inches. Because sights on a shotgun are fixed sights, it is necessary that the end of the barrel be so elevated as to compensate for this trajectory at the established distance, or 12 inches at forty yards. Naturally a lighter charge of shot will not drop so much as the heavy one; therefore the figures must be on the heavy charge.

To ascertain the correct elevation, take the thickness of breech and muzzle, and carry out the figures so that the rib at the muzzle will be depressed. In shooting at forty yards, allow 0.004 inch for every yard that can be multiplied by 0.004, which will be the drop of the rib, or difference between heights at the breech and the muzzle of the rib for a 30-inch barrel. The front sight is not included in these figures. As an example, establish a set height at the breech which will be as low as a rib can be set; 0.004 inch multiplied by forty yards gives 0.160 inch which the rib must be depressed lower than the rear portion, forty yards being set as a standard. If the distance is greater, it will be necessary to depress the rib much lower, altho this is half the range of a well choked gun. Holding is taken into consideration to secure the difference, which will be explained later in the chapter. The difference we are concerned with now must be made by depressing the rib at the muzzle in order to have the pattern come in the center of the object shot at. Sweat both ends and middle of the rib, and at the tip end of rib, at the muzzle, place a small lump of solder in the center to be used for a sight. Test the gun with the standard intended load at forty yards. The first trial usually determines the changes to be made. The lump of solder used as a sight should not be any higher than the intended bead front sight.

Assuming that the trial and height are proved to be correct, the actual making of the rib is a matter of machine and hand operations. The making of a ventilated rib requires the shaping-out of the legs or brackets at given intervals along its entire length. These may be spaced to a given distance along its entire length or may be shortened or lengthened either from the front or the rear, but a given length for each bracket produces a much better appearance to the finished rib. After the machining operation, a rib will look rather crooked and bent out of shape, so it must be straightened before being fastened to the barrel. Sometimes because of the thinness this straightening may be done with the hands alone, by bending and twisting the rib. If there should be short crooks, the hammer must be brought into use. Select a hammer that has a flat peen across or at right angles to the handle. The peen should not be too sharp, but smooth and rounded at its edge. To straighten, place the rib on a smooth piece of hard wood clamped in the vise. Hold the rib on this, and with the peen of the hammer, strike light blows on the inner or curved side of the rib. Do not strike hard enough to dent or bruise the rib so as to show on the surface or the opposite side. By a little practise a rib can be made very straight and true. A rib should be straightened after every operation so that it will not be so badly bent that it requires too much finishing to make it look well.

Matting the top is next in order after the machine work. Refer to Chapter XXII, Volume I, in which the correct tools and methods are given for this. Also refer to the drawing which illustrates the matting and border tools. A beautiful matted surface can be placed on its entire length, or again, if you have a milling machine, fine cross lines can be made; these are often seen upon some of the finest shotgun ribs. However, with the hand tools the student can produce a very pleasing effect. Matting a rib usually springs it out of shape very badly and also stretches it considerably; therefore, it must be peened and made perfectly straight again before it is fitted to the barrel.

Before fitting a rib to a barrel, a special holder must be made. Use one side of the hardwood piece on which all the straightening operations were made; this will save making a new one. Fit one side of it into a properly shaped groove, and make four clamps of wood, or use parallel clamps to hold it firmly in place in order to file out the radius in the brackets. Coat the barrel with Prussian blue and secure the bearing surface on each leg. This spotting operation will enable them to be worked down gradually until a true and even contact is made on each bracket in their respective locations. To remove the high spots, file lengthwise with a half-round file, and file so that the outer edges will fit closely and the center will have just enough freedom so light can scarcely be seen. The half-round file used for fitting the ribs should have the tang bent toward the flat side, so that when the file handle is put on, it will not interfere with the filing operation.

With the rib thus prepared the soldering or sweating operation follows. Since the radius section of the brackets is filed bright and smooth, so must the locations be upon the barrel. Bear in mind that solder will not adhere unless the surfaces are bright. With the rib held over the alcohol torch or Bunsen burner, warm each leg to the proper heat, just so the solder will run free, and by wetting the surface with soldering acid, together with the solder, a perfectly soldered surface is obtained. Each bracket must be done likewise until

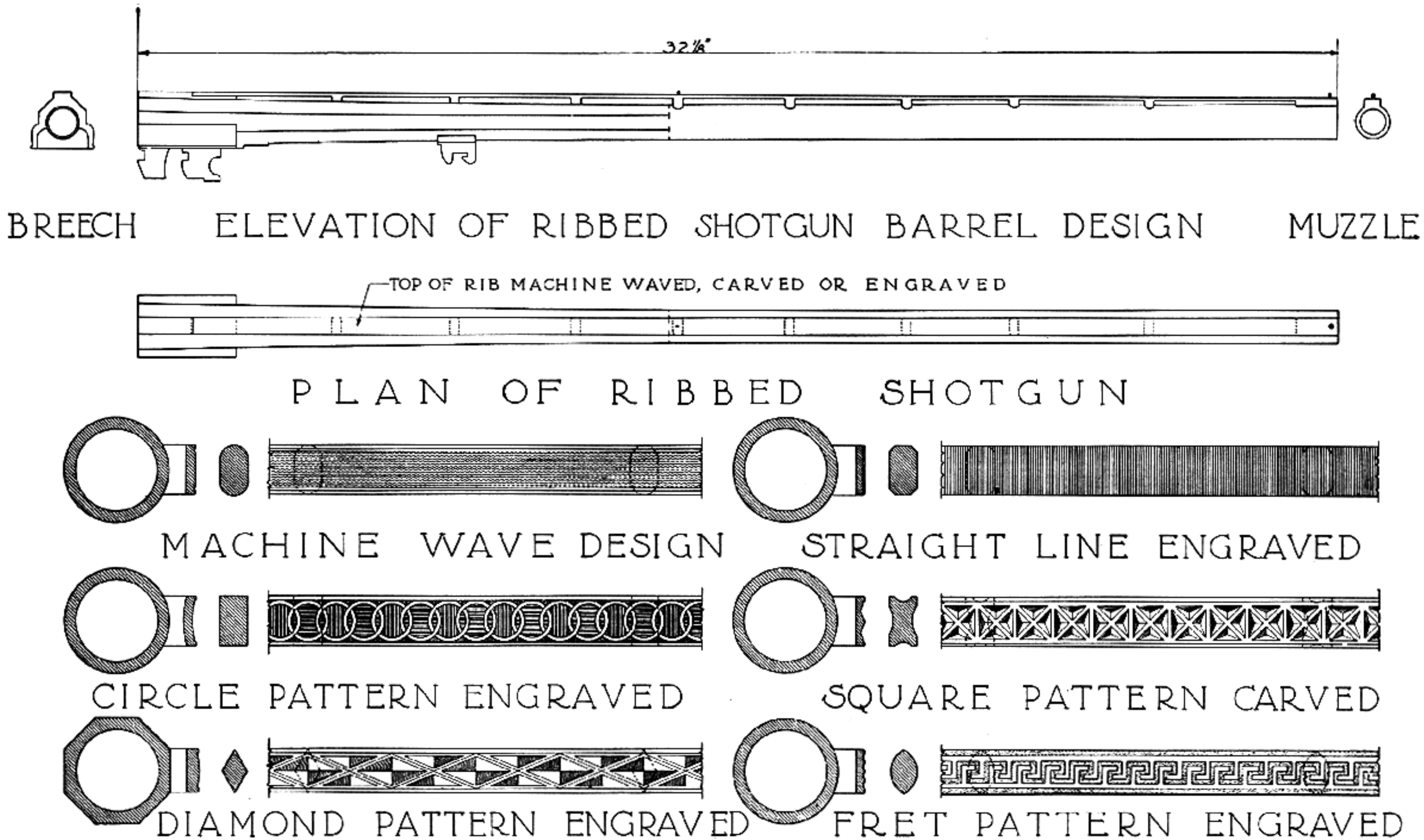

Fig. 149
Designs for ribbed barrels

the entire number is gone over. Have plenty of solder adhering to the radius, but try to keep it off the sides and under side of the rib. Also be very careful not to heat the rib so as to blue or blacken it, for in that case solder will not adhere, and the surface thus made must be repolished before going any further with the tinning.

When all the brackets are well tinned the inner surface of the rib must be well finished with fine emery cloth. Be careful not to disturb the solder on the radius of the brackets. The rib is again clamped in the groove on the straightening plank, and by holding it in this position there is no vibration and a high finish may be obtained.

Draw-file or draw-polish the barrel where the rib is to be fastened, and be very careful to have the surface bright and clean or else the solder will not adhere. Place the rib in position, mark each location where the brackets are to be placed, and tin. Be sure to have the space large enough so that when the brackets are in position the solder has a good space all around. Heat each place on the barrel over a Bunsen burner and only heat it enough so the solder will just run. Wet the surface with soldering acid, and with a bar or piece of wire solder-tin over each section which was laid out for the rib brackets.

When all the spots are tinned and the barrel is cool, place the rib in position, confining it in place with small "C" or parallel clamps over each bracket, and see that the rib is held firmly and at the true center on top of the barrel. Commence at the breech, and heat both the barrel and rib carefully over the Bunsen burner at the point of contact. Be extremely careful not to overheat either the barrel or rib, but just enough so the solder will run. To control this, hold a piece of wire solder in your hand and constantly test, and when it just begins to melt on the surface of the steel, withdraw and continue to the next bracket, and so on until the rib is soldered the entire length of the barrel. When cool, remove the clamp and wash thoroughly with hot water. This will remove the acid which would otherwise rust the bright surface of the steel. Wipe dry, and if the work is to stand for any length of time, oil it lightly with No. 3 sperm oil, by rubbing it over with a rag which has been moistened with the oil.

The best way to remove the surplus solder at the joints is by means of scrapers. An old flat file about six inches long with the teeth ground off on each side may be used there and also on the sides for one or two inches at the end; also grind the end square. By using the tool in the manner of a chisel, it is very effective. A scraper made from an old three-square file with the teeth ground away at the end is also a very good tool to get into the corners, which could never be reached with the flat file. Carefully remove all traces of solder, for bluing will not take effect where any solder remains.

Figure 149 illustrates a ventilated rib barrel and also six sections of different styles of brackets: straight, round or pear shaped, and the diamond form. The straight bracket is the easiest to make; the pear or diamond forms have more work attached to them, but they look more artistic when completed. Figure 150 shows a rib extension which can be fitted over any standard shotgun rib on single-barrel guns; this allows the shooter a better sighting plane.

To Re-solder Ribs — It often happens that double guns have the rib loosened from the barrels at the forearm lug. It is an easy matter to reunite these. To do so, carefully raise the loose rib as far as possible without bending it, and hold it thus in place by inserting a piece of wood sharpened to the from of a wedge to retain it out from the barrels. With a thin scraper, scrape both barrels and rib where they come into contact with each other. Wrap the barrels well in different locations with soft iron wire; four to six strands to each wrapping, with the ends twisted together, are sufficient. Place the wedges between the wire and rib. Any small round cold-drawn steel may be used, just so that pressure can be placed between the wire and ribs. With the ribs thus in place, hold the raised section of loose rib and barrel over the flame of a Bunsen burner, and tin the parts, using only

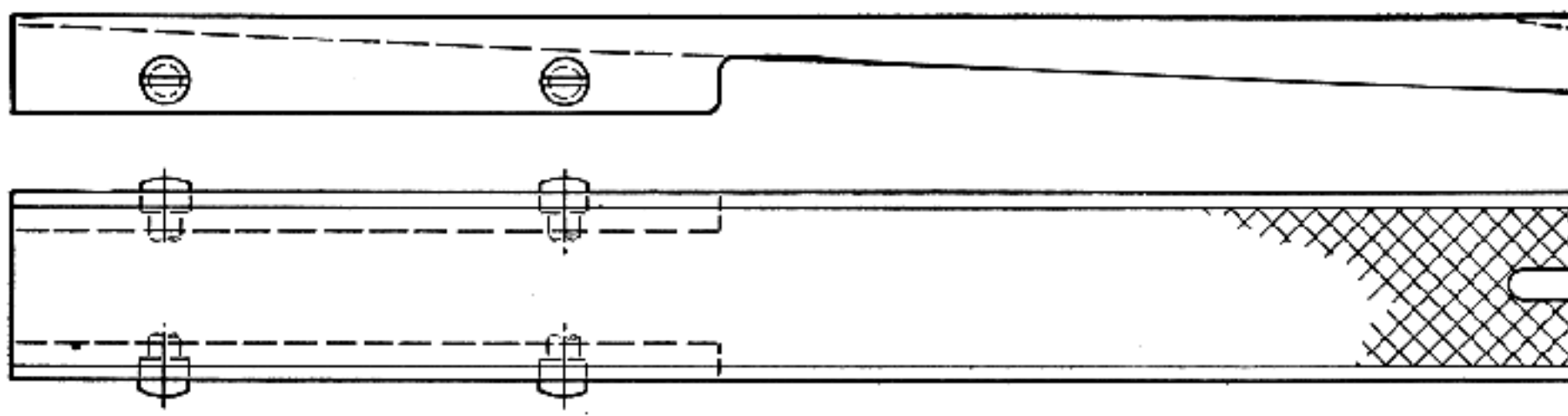

Fig. 150
Shotgun rib extension used on single-barrel trap guns

rosin and small soldering wire. When both rib and barrel are tinned, put the rib in place by wrapping wire over this section and hold it in place with a wedge. It may require two or three wrappings of wire in the location to hold a rib in place before a perfect job of sweating is achieved. Complete the sweating operation over the Bunsen burner. Exercise the usual meticulous care when placing it over the flame of the burner. If it is done properly the joint is scarcely noticeable. If it so happens that solder shows between the ribs and barrel, a scraper for such work can be made of a small three-square needle file with the sides ground to remove the teeth; sharpen it to a point. Binding wire, well wrapped around the barrels, and wedges set well in place, are a precaution against starting the ribs from the barrel by heat. With this security there will be no harm done even if the solder is melted between the ribs and barrels in proximity of the loose rib.

Loose Forearms — A common defect found in most of the cheaper arms is the common "snap-on" type of fore-end in which a curved spring steel lever is used. The length varies for different guns; some are about one inch long while others are even longer. One end has a pin to fasten it in one end of the fore-end iron with a small flat spring holding it out from the iron when removed. To tighten these, remove the lever and test with a file for hardness. If the file makes no impression on it, draw the temper over a gas flame until a very dark blue color appears, and then peen the lever, which is a method used to stretch the metal. Peen on both sides of the lever; by this operation a lever is often made to work very successfully. To check the amount the lever has stretched out, use a micrometer and compare the readings. After the lever is lengthened about $\frac{1}{64}$ inch, set it back in the forearm iron without the wood in place to see if it snaps into position very hard. If so, the peening has achieved the desired results. At times, less curve will do the same thing. Since the lever is in a semi-annealed condition, straighten it out a little at a time until it holds the fore-end iron in place solidly. It also happens on this type of fore-end that the iron has become set too deeply in the wood; therefore, it must be refitted to have it snap back into place.

As a rule, very little trouble of this kind is experienced on the better grade of shotguns, as the system of locking is the best. It requires quite a few mechanical features which are not complicated but very effective in holding the fore-end in the correct locked position. When fore-ends do come loose it is usually caused by a broken or weak spring.

Arms which are now obsolete come in with lost fore-ends; it usually costs more to make a new one than a new gun could be purchased for. This operation requires so much machine work that it would not be practical to go into detail concerning it.

Broken Parts and Renewals — Occasionally broken parts can be repaired by welding or brazing operations. Naturally there must be some line drawn between the two methods. Parts such as trigger guards, hammers, triggers, etc., can be successfully welded, but the setting in of pieces of steel to be filed out for notches, etc., can be more successfully brazed than welded, because it does not require the heat radiated by the acetylene flame. Broken tumblers which have the firing pin integral with the body are best replaced with new ones or a new one made if on an obsolete arm. Welding the tumbler is not as successful as making a new one of a piece of well tempered alloy steel. Broken strikers are always made from chisel steel and given the correct heat-treatment, which will last the life of the gun. Some strikers or firing pins are made from very poor material and it is always well to have an extra set of these made up which may be used to replace one if it should break.

When working down the trigger-pull on a shot-

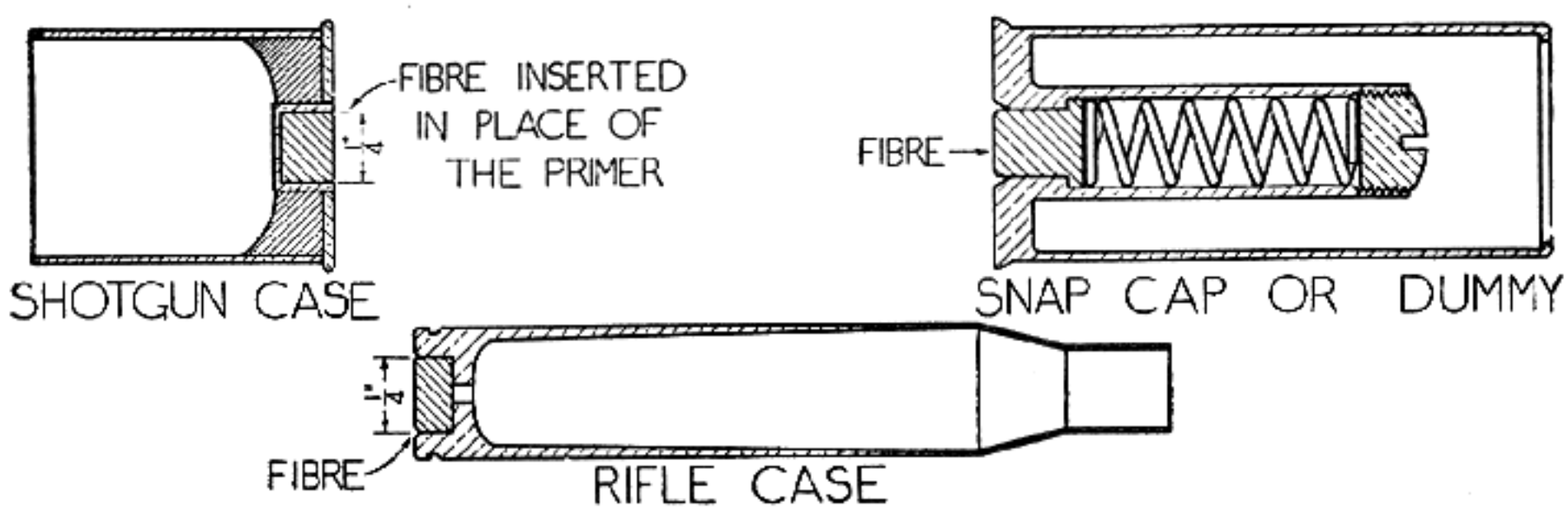

Fig. 151
Snap caps: used when trigger pulls are tested

gun, dummy cartridges or snap caps should be used in the chamber. For that matter, snap caps should be used on a number of firearms to eliminate the possibility of the breakage of firing pins. Figure 151 illustrates a method which can be employed on fired cases, by inserting a piece of fiber in the primer pockets. First, ream the pocket out to ¼ inch and turn a piece of fiber, either red or black. Press it in place and face it flush with the face of the case. By using these dummy cases in the chamber, you avoid all injury to the striker. The greatest damage is done by the continuous snapping of hammers and tumblers against empty space, causing the firing pins to crystallize and break; but inserting the fiber in the primer pockets eliminates such breakage. Snap caps can be purchased for any gauge of shotgun. These have a strong spring behind the piece of fiber, and when the striker hits the soft material there is enough tension in the spring to take up the shock of the blow. However, the dummy case made with the fiber inserted solidly in the primer pocket is particularly good, regardless of the gauge or caliber of the arm.

When most men pick up a firearm their first impulse is to snap the triggers, not only once but a dozen times. Such men are like boys who, when they have an arm in their hands, must play with it. They never realize the damage they do in snapping the gun. We must place a dividing line between a bolt-action rifle and arms which are constructed with a firing pin, either separate or a part of the hammer; the latter arms are shotguns, single-shot rifles, and some revolvers. When such arms are handed to these individuals, snap caps can be inserted without fear of their breaking the firing pins or strikers.

The usual cause for the breaking of firing pins is excessive snapping of the locks without a dummy or snap cap in the chamber. If pins have become damaged or are too loose in the action, the making of a new one is a simple matter, for all pins are made from high-grade chisel steel. To ascertain the size of a pin, try the old pin in the drill gauge, and if a pin is lost, gauge the pin hole with a drill from the set and select the size of drill rod which the drill has determined. On some foreign arms the holes in the action differ from our standards. If so, order the next larger size of rod, and polish or file it until it has the correct fit into the hole. Cut the pin to length, and file and polish the end to a radius. Harden and draw the temper to a blue. Refer to Figure 129, Volume I.

Damaged fillister-head action screws must be made up on the lathe and fitted into the thread. A number of the screws used on shotguns are not standard, so they must be made. Fit the screw and undercut the head, and when in position place a small prick-punch mark on the head facing north and south. After removing, cut the screw slot either on the milling machine or with a very narrow hack-saw blade.

Wood screws are easily replaced, for such a large variety is made that one can always be found for replacement. If the wood has become rotten around the hole, fit in a wooden plug, glue it in place, and refit the new screw. Screw heads may be artistically decorated by referring to Chapter XXII, Volume I.

There are various little points which have been neglected in this chapter; one of these is the spring work in a shotgun, but as I have taken this up in other chapters, it will be unnecessary to rehash the same information. However, there still remains a bit of special information which should be imparted to the reader on the question of shotguns, and which, I am sure, will be quite welcome.

When I have taken men on the range to test their arms and try to teach them the correct "stance" in shooting, I have found that most of them willingly change their ways and are very apt pupils. There is one point, however—and this part of the subject need not have been mentioned—which sometimes eludes them. "How to shoot" is not merely discharging a gun. It is taken for granted that every person old enough to handle a gun should know how to fire it when loaded. What is meant then by "how to shoot" is how to shoot *well*, and in teaching any one to do this, one of the most important requisites lies in taking aim on the object at which the person is expected to shoot. Nearly all young people close one eye when shooting. With a shotgun a man will learn to take aim much sooner by keeping both eyes naturally open than he will by holding one closed, but it is a hard thing for many people to do. The "hiding eye" will "close up" just as the finger is pressed on the trigger, and with that closed eye there is always a deviation of the gun from the line of true aim. With a little practise one should see the powder gases at the muzzle with both eyes open. While shooting from a high point when light conditions are right, a few shooters can follow the bullet from muzzle to target, even on a high-velocity arm. Such conditions can never be realized by a shooter if he holds one eye closed, for it is only natural to assume that if he closes one eye he is robbing himself of half his vision. The one eye cannot see the whole of the object at which it looks, but only a part or one side of it; therefore, it requires the use of both eyes to see and estimate distance correctly; one eye may outline an object, but it calls for the employment of two eyes to give it a perfect perspective.

When an object is hastily caught within the range of both eyes, the sense of vision is instantly assured as to the position of the object, its distance from the gun, and if moving, the rate of speed at which it is moving. Through mental contact the brain is promptly impressed with all of this, which gives confidence, and consequently, calmness. Here the main object favoring success has been attained by calmness and a strong belief that the shot is going to succeed. The instant this is felt is the one at which to press the trigger. The western expression "crack down" means that a quick correct sight is secured, whether there is time to think about it or not, and hence an instantaneous discharge of the arm takes place with both eyes still on the object or game.

Distance requires elevation in proportion; therefore a rifle is fitted with sights which have both the elevation and windage to meet various distances. The elevation of the rib on a shotgun is fixed and immovable. But by a simple law or perspective, when you look at an object eighty yards away and mechanically bring the sight to bear upon it you have the action of the gun lower than if it were only forty yards off; whereas if you adopt the one-eye system, you fire at exactly the same elevation at all distances. It would be as absurd to take a level aim along the rib at eighty yards as it would be to fire a rifle at a range of 600 yards with the sights set at 100 yards. While everything has been done to give the correct sighting features, we have in rifles today to take full advantage of the increase of power. As long as the one-eye system of shooting is adopted by so many, the object, if hit at all, will be struck by only the outside pellets of the pattern and not by the effective central shot. The proper method is to throw the gun well up and into the shoulder; the drop and possible offset will then bring the gun right in front of the face; the head being erect and both eyes fixed intently on the object, the line of motion is commanded and the aim taken instinctively. The central shot or pellets have thus an allowance given them to compensate for distance and the motion of the object. You look along the imaginary line, higher at the breech according to distance, and at this elevation the gun is fired, exactly as a rifle shot sets his aperture sights to a given distance.

Because so many do not understand these simple laws of correct shotgun shooting they come in to have a stock changed to compensate for their bad shooting, or else present various other excuses. After their faults are pointed out they usually go away with a better understanding of their gun. I remember one very amusing exception, however. This man shot at thirty-one hill rabbits in one day and only raised a few feathers from their tough hides. He wanted a gun to use a special three-inch shell and No. 2 shot so that he could penetrate the hide of a hill rabbit. If any of my readers go after hill rabbits, do not blame the gun or the ammunition you are using, but yourself and the use of one-eye shooting.

The most important advantage we derive from the use of two eyes is that it enables us to see distance, or the third dimension in space. That this vision is not the result of experience as monocular vision is, is obvious from the fact that distance is seen as perfectly by children as adults; it has been proved by naturalists that animals newly born appreciate distance with the greatest correctness.

In many instances a shotgun shooter wishes to know the patterning of his gun after changing the choke. The following tables and methods are a means of understanding this as well as the methods of figuring out the percentage of choke. They show the per cent of total pellets in the thirty-inch circle for four different choke borings of barrels at the range indicated. The number of pellets represented by the percentage for any size of shot-charge is easily figured by knowing the total number of shot in the charge.

Example—Charge 1 1/16 ounces of No. 4 shot fired at 40 yards for an improved cylinder barrel. Total of pellets, 181, multiplied by 50 from the table, and divided by 100. Answer, 90.5—pattern 90 per cent.

Range	*True Cylinder Per Cent*	*Improved Cylinder Per Cent*	*Half Choke Per Cent*	*Full Choke Per Cent*
30 yds.	60	72	83	95
35 "	49	61	71	82
40 "	40	50	60	70
45 "	33	42	50	60
50 "	26	33	40	48
55 "	21	27	32	39
60 "	17	22	26	32

Oz. of Shot	*Size of Shot*						
	4	4½	5	5½	6	6½	7
1½	255	300	330	360	405	450	510
1 7/16	244	288	316	345	388	431	489
1⅜	234	275	303	330	372	413	468
1 1/16	223	263	289	315	355	394	446
1¼	213	250	275	300	338	375	425
1 3/16	202	238	261	285	321	356	404
1⅛	191	225	248	270	304	338	383
1 1/16	181	213	234	255	287	319	361
One	170	200	220	240	270	300	340
15/16	159	188	206	225	253	281	319
⅞	149	175	193	210	236	263	298
13/16	138	163	179	195	220	244	276
¾	128	150	165	180	203	225	255
11/16	117	138	151	165	186	206	234
⅝	106	125	138	150	169	187	212
9/16	96	113	124	135	152	169	191
½	85	100	110	120	135	150	170

Do not become too anxious concerning the tech-

nical performance of any shotgun or its ammunition. Such matters are usually studied by the makers of the best guns.

The shooter who makes tests of patterns and penetration should never take his results too seriously. Nearly all the standards are based upon averages, and concrete results may vary considerably without implying that anything is wrong.

Many who may suspect themselves of being poor shots should see whether their guns are choked too greatly. Shooters in constant practise can often turn it to better advantage than the occasional shooter. To have the right barrel a true cylinder often saves a man from missing very easy shots and also saves for him a considerable amount of game.

Publishers' Photo Service, N. Y.

Fig. 152
Sunrise: and soon the ducks overhead

CHAPTER XXVI

The Art of Gun Engraving

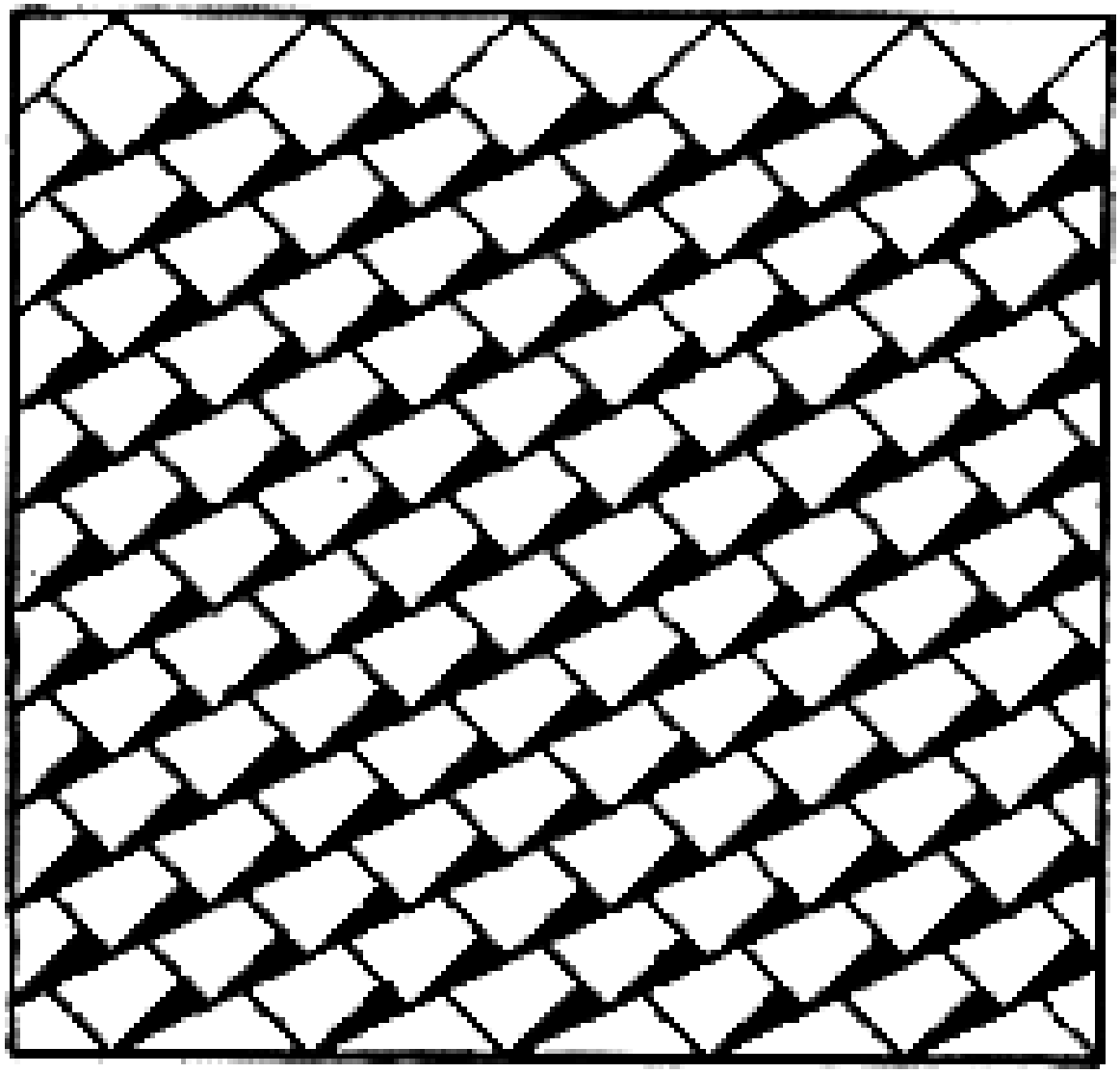

CHAPTER XXVI

The Art of Gun Engraving

THE engraver is classed as an artist. Gun engraving is indeed a profession, for it requires years of study to become dexterous and a master of the art; and when it comes to a finished gun engraver who is capable of originating elaborate designs which are oftentimes masterpieces, such talent means a lifetime story. Only a true artist, when he looks upon these illustrations, can appreciate the value and effective beauty in such perfect workmanship on metal. Art of this nature requires an extraordinary amount of patience and love for the work. The engraver not only uses various tools to chisel these designs on the steel surfaces of a firearm; he must be able to use a pencil and pen to place his thoughts on paper first, perfect in every detail; he is an artist combining manual and artistic skill in his execution. Such a man is like all genuine artists, calm and temperate, never mingling with the crowd or superficial society. A perfect understanding of the beauties of life is that which endears him to those who love the work produced by his hands.

This chapter has been made possible by Mr. R. J. Kornbrath of Hartford, Connecticut; various illustrations it contains are from his hands, and every one is a masterpiece. His ability extends not only to sketching or painting this work on canvas or paper, but transferring it to steel parts with chisels and a hammer. Do not, however, be awed like the young painter who, when he saw an original Rubens, burned his palate and brushes. First, acquire the principles of free-hand sketching with a pencil, then transfer the drawing through the aid of engraver's transfer wax, on the steel, and carry out every little detail with well-defined lines. Experiment on small pieces of steel with some simple line or scroll engraving, and when you become proficient, apply your knowledge and skill to more elaborate designs.

If you have attempted to etch steel as described in Chapter XXII, Volume I, there is little doubt as to whether you can master this art. The term applied to engraving on steel is called chiseling and is achieved with a hammer and various forms of chisels. The most-used chisel is a pointed or onglette graver. Companies handling such tools may be found listed in the appendix. A No. 5 or 6 Renard is preferable, and these tools can be made by yourself through information obtained from chapters pertaining to that type of work. (See Figure 153.) A complete set of engraving tools costs very little in comparison with others used in gun work. Perhaps it will be easier for one who is just starting and is not accustomed to handling the chisels, to have deeper lines laid out on the steel surface, for much can be done with engraving tools if the design is etched into the metal first.

The steel that gravers are made from should be the finest quality of tool steel containing a high percentage of carbon. It will prove cheaper in the end to procure these tools. They are mostly made in Switzerland, France, and Germany, and because of the makers' long experience the steel from which these gravers are made and their temper are perfect for work upon gun parts. The gravers come from the manufacturer without handles, but these may be had in any desired shape. A regular file handle may also be used with a steel plug inserted in the end of it. The steel plugs are made of cold-drawn steel and the file handle is drilled out from the end, the tang of the graver not being touched. This plug is inserted so that the hammer will not touch the wood, which affords a solid base when the hammer strikes.

All gravers must be kept at a very keen cutting edge and only stoned from the point. There is a special graver sharpener made, in which the graver is set and held at the correct angle, while on the opposite end there is a roller which reduces all friction as the graver is brought back and forth in the act of sharpening. The stones used should be fine Washita and Arkansas perfect white to produce the keen edge. A special graver sharpener is not usually required, unless one wishes to hold the same angle on all the tools he is using.

Figure 153 illustrates different forms of gravers; flat gravers come in numbers from No. 0 to 14; pointed onglette gravers, from No. 0 to 6; half-point and knife-edge gravers only come in one size. There are two half-point gravers, right and left hand. Bevel gravers are numbered from 1 to 6; square and lozenge gravers from No. 1 to 8. Flat chisel gravers come in three sizes, Nos. 1, 2, and 3;

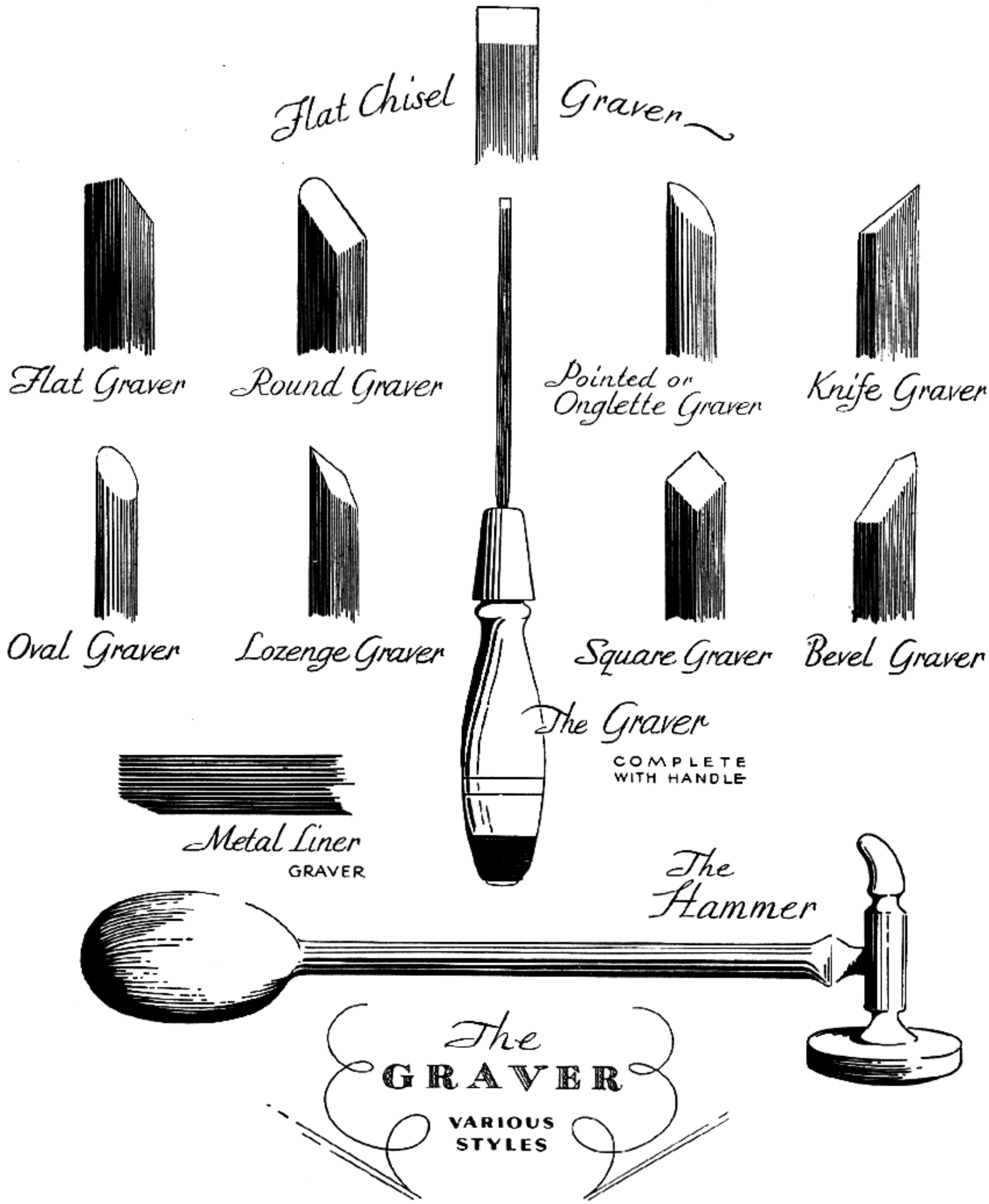

Fig. 153
The steel engraver's tools

and also flat gravers from No. 36 to 49. Lining gravers are made in thirteen sizes from No. 8 to 32. There are from two to twelve lines to a tool, No. 8 being the coarsest and No. 32 the finest.

Chiseling is done by holding the tool in the left hand and the hammer in the right. A special hammer should be used for this work; it should not be too heavy and neither should the handle be too clumsy or out of proportion, but rather have a little spring to it as the blows are struck. The

object or part of the gun to be engraved or chiseled is held in a vise and the work is done standing in an upright position. When cutting straight lines, place the tool on the object and tap the handle of the graver or the steel insert with the hammer. Special care should be taken not to tip the tool too high; this is to prevent digging too deeply into the steel. Only practise will bring a straight and evenly cut line to depth and clearness. The beginner will find the cuts ragged and uneven, but if he applies determination and gives himself time, improvement is certain to be his reward, and he will find just as much pleasure in engraving designs upon metal parts of a rifle as he will in making a new stock from the finest Circassian walnut. In chiseling straight lines, the tool is held steadily in one position while the handle is tapped by the hammer; no wrist motion is required.

In chiseling curved lines, the wrist of the left hand, in which the tool is held, plays the most prominent part in the execution of the work. In cutting a line curving to the left, the wrist assumes the same motion, and if the line is curving to the right, the wrist follows the line in that direction. This also applies to short curved lines, but on long curves a certain degree of body motion is also necessary along with the wrist. All this work is done standing up, and the body motion consists of stepping along and turning with the curved line while chiseling. In whatever way the curve is cut, the body naturally moves in that direction.

A spiral must be chiseled in sections; certain parts are chiseled toward the right and others toward the left. This also applies to less curved lines. Such work is best done in an engraver's swivel vise, but if you only have the regular bench vise which swivels, it can be left loose and turned in the desired directions. By turning the swivel vise, you often save chiseling a curved line from two different directions; all you have to do is stop chiseling when unable to go on, turn the swivel vise, and continue chiseling in the same direction. It will frequently be found necessary to swing it to right or left during execution of the work.

Shading of leaf work is usually done with a lining graver, which Figure 153 illustrates. These gravers are made in a variety of widths and a number of lines, and are used in the same manner as a chisel

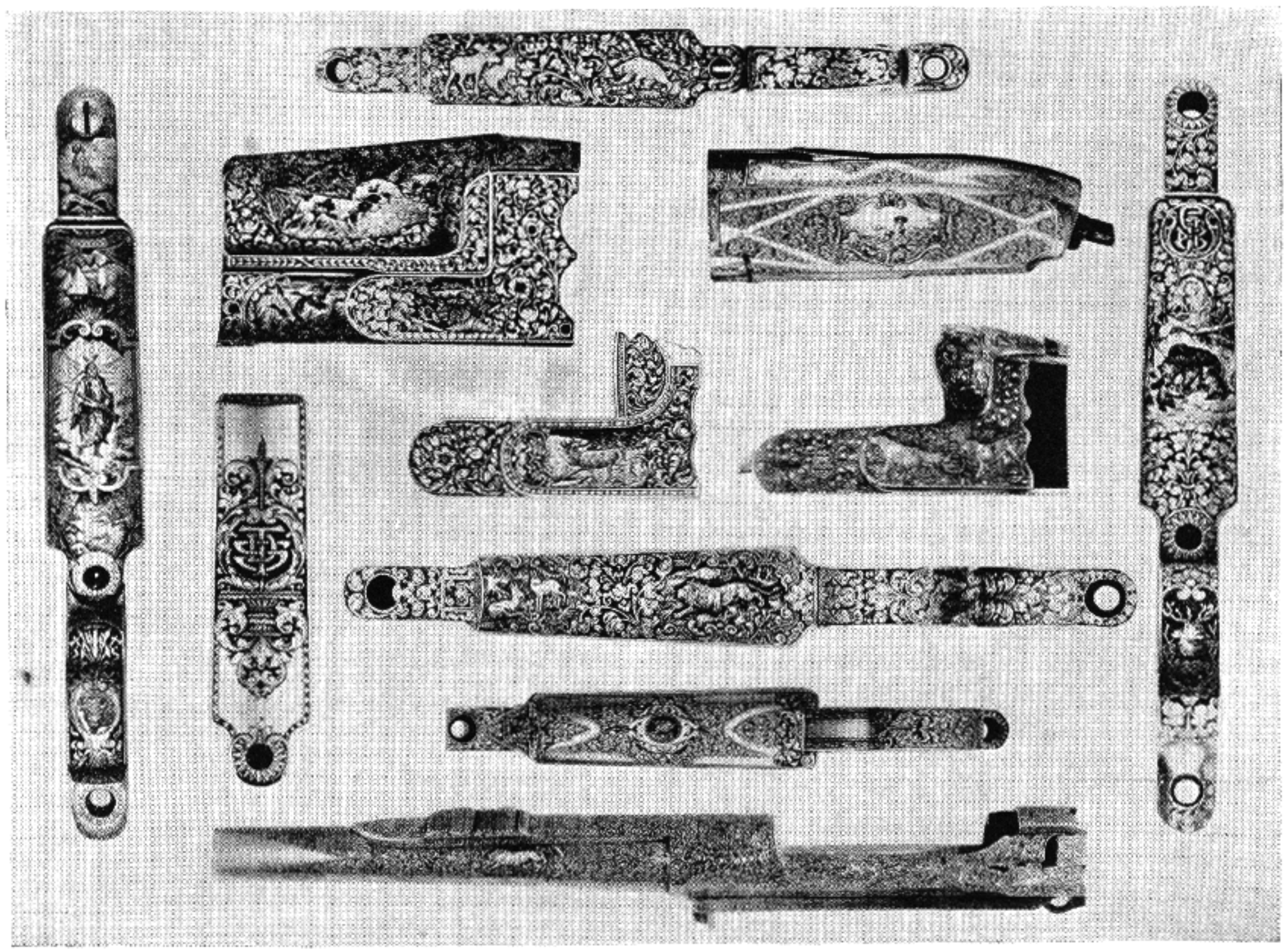

Fig. 154
Only the finest engraving is appropriate for the better arms

which makes several lines at once. These tools should be used often by the beginner, for they produce very finely shaded lines. By tipping the liner a little to one side or the other you will find that the lines produced graduate in depth and some very nice shading can be produced. This lining tool is seldom used by the gun engraver who is producing a fine piece of work; instead, all the shading of ornaments, etc., is done with a hand tool which only produces one line at a time. The beginner can use a number of lining tools on sight ramps, line of sight over the receiver, or other places about a rifle where fine shaded lines give a pleasing appearance. Much patience and practise is required to have clean and evenly cut lines on a steel surface, but if one has a talent for drawing, together with determination and willingness to give such work a trial, he will spend many hours of pleasure.

Etching — Before a design is etched into the metal parts, instead of using varnish to cover the design, the finished gun engraver uses a lacquer of his own preparation; it consists of one part white beeswax, one part mastic, and two parts pulverized Syrian asphaltum. Melt the white beeswax in a clean receptacle and add mastic. Mix the two ingredients thoroughly and add pulverized Syrian asphaltum. All should be melted together evenly by stirring while they are under heat. It requires some time before these parts are mixed thoroughly. Keep agitating by constantly stirring until you are satisfied that all is mixed. Pour the contents into a pan of water, and while it is still warm, press it into small bars with the fingers. This material produces the covering lacquer for the design to be etched; however, it cannot be used for covering in that state. When ready to cover the design, with a sharp knife scrape a small amount off a bar into a shallow, small, clean dish and add enough pure spirits of turpentine to dissolve it. Always keep this lacquer protected from dust, etc.

Should the part of the gun which is to be etched have any screw holes or other openings, they should be plugged with wood and wax and the part thoroughly cleaned to remove any oil spots. Should the design to be etched be of a complicated form, the engraver draws it free-hand on the gun part with a steel marker. This should be done before the part where the surface to be etched is cleaned.

The design is now ready to be covered with the lacquer, which is done free-hand with the aid of a fine pen, just as if drawing with pen and ink on paper. The lacquer should not be too thin but just thin enough to flow readily through the pen. Care should be taken not to touch any part of the design already covered, before it is thoroughly dry. If you do not touch it at all, even dry, so much the better.

When the ornaments are covered with this lacquer and are thoroughly dry, the large surfaces on the gun part, such as the under side, are then covered with a mixture of asphaltum and wax, which the gun engraver also prepares himself by melting the two together. This, of course, must be warm in order that the surfaces may be painted with the aid of a small brush. When you are certain that no metal is exposed with the exception of the background which is to be eaten away around the orna-

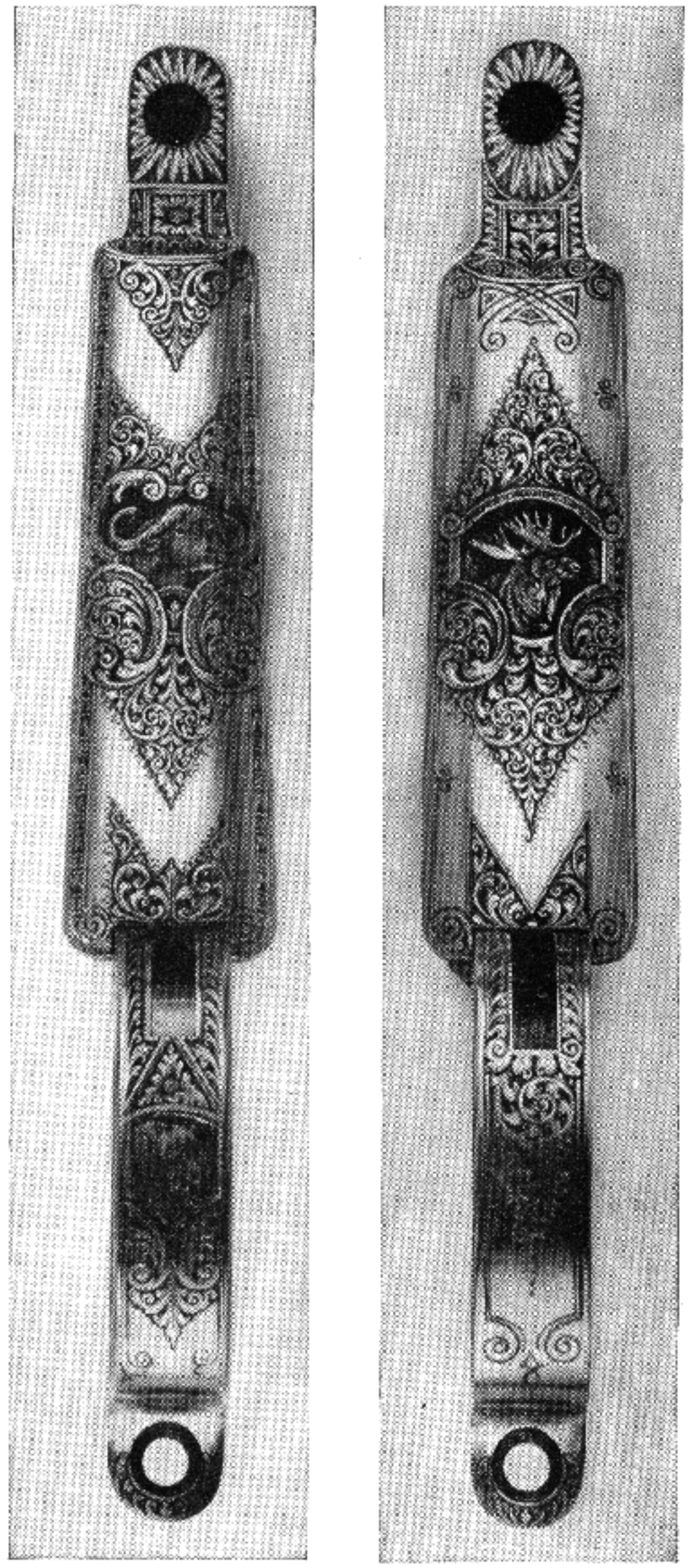

Fig. 155
Mauser magazines and floor plates. Animal heads in high relief work

mentation, then is the time to hang the gun part in the acid—as described in Chapter XXII, Volume I.

For fine and deeply etched designs, the design or ornamentation, especially stems of leaf work, should be held a trifle heavier upon the steel parts being etched, or else the acid is likely to under-eat to such an extent that the fine lines will disappear altogether.

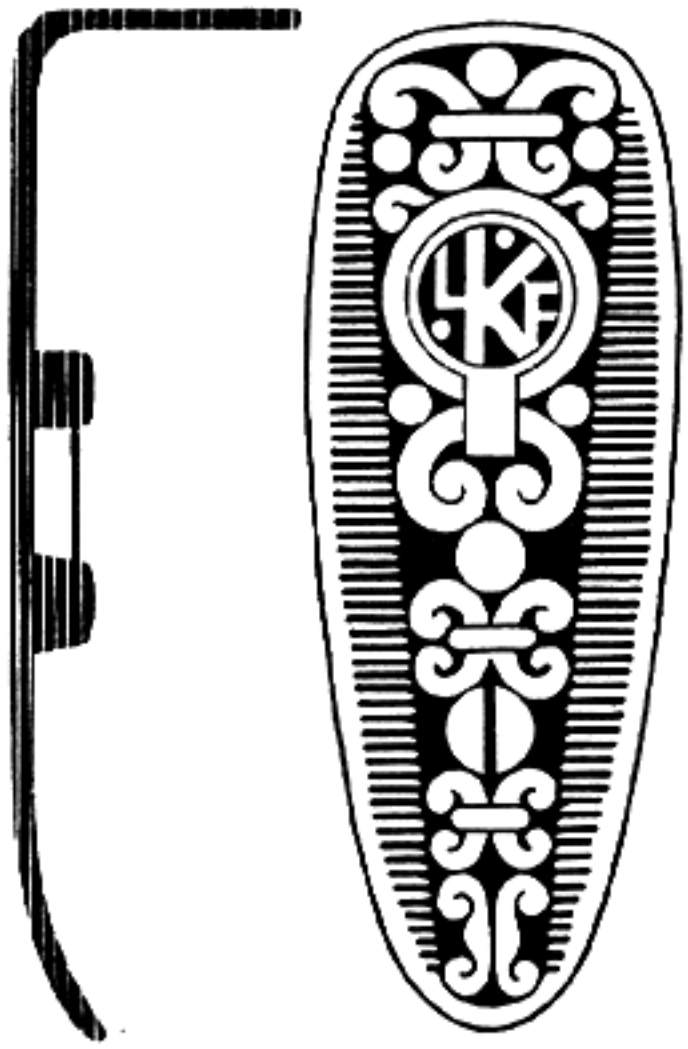

Regular 30-06 Service Buttplate

1

2

1 One of any number of designs to be evolved from natural forms

2 The abstract, or more conventional, type of design (ABOVE)

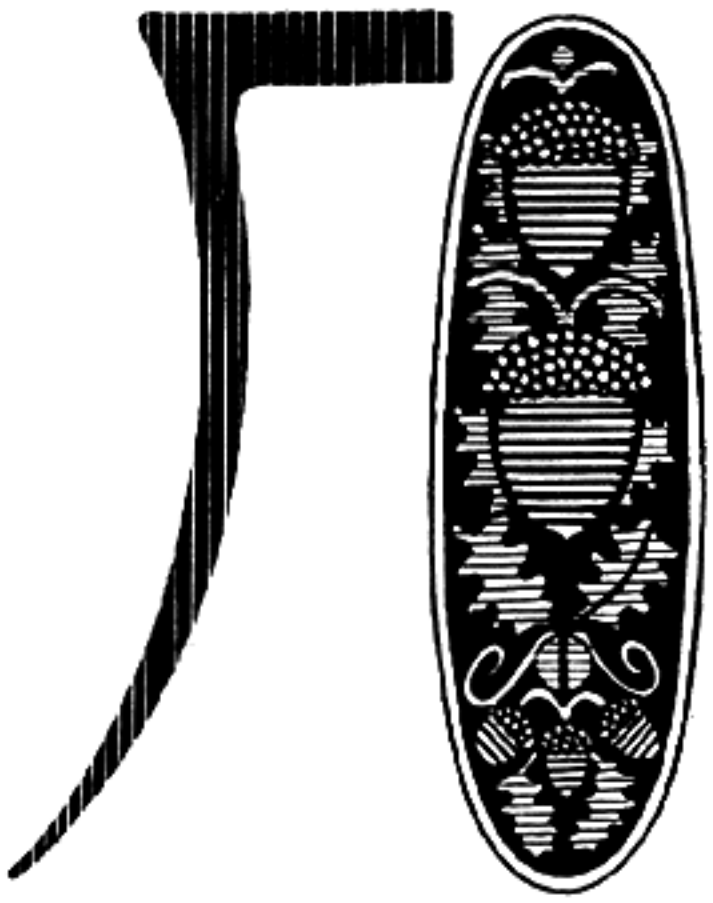

Old style, light rifle Buttplate

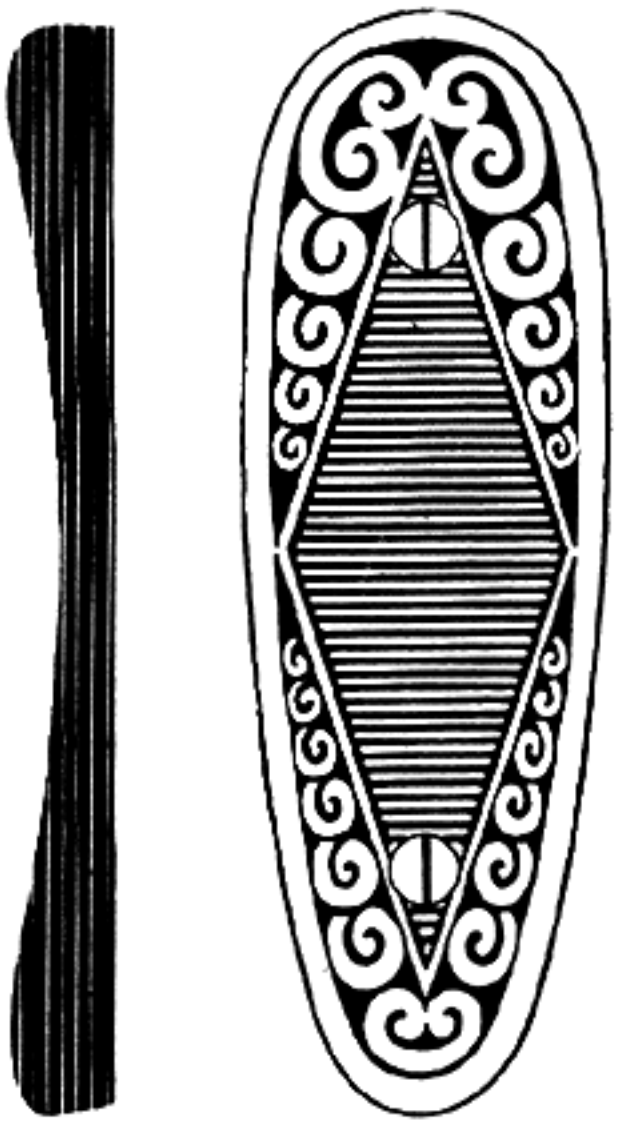

Springfield Sporter

PICTORIAL

MODERN

Grip Caps

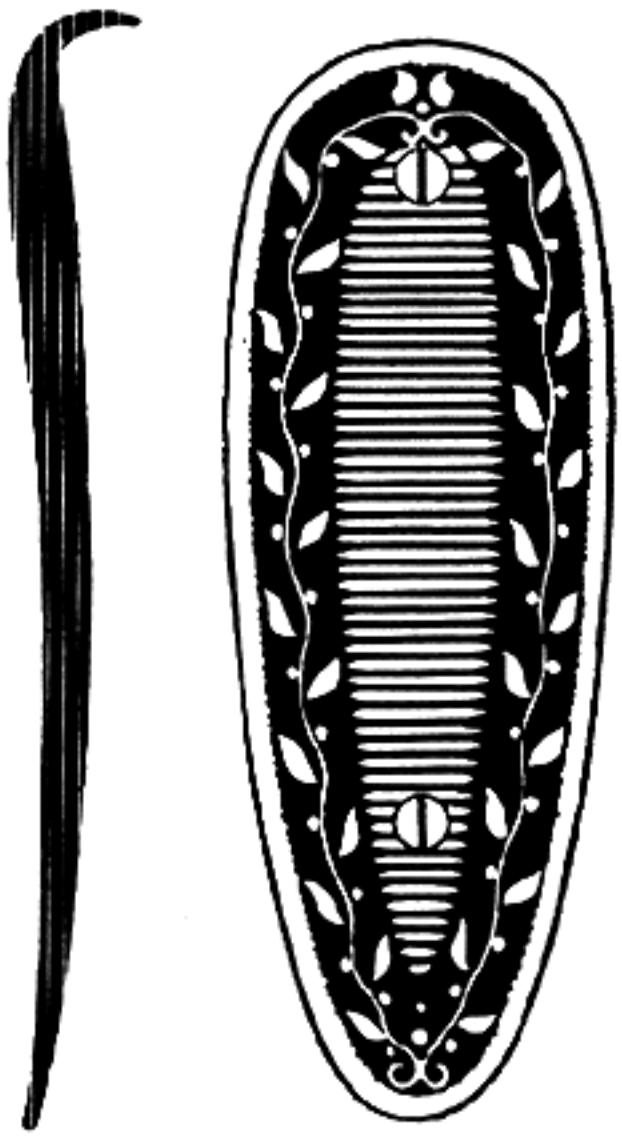

Imported blank for custom-built rifles..

Fig. 156
Design suggestions for etching or engraving on butt plates, floor plates, and pistol-grip caps

When the gun part is etched deeply enough, take it out of the acid and wash with water. The covering lacquer is removed with the aid of a cloth dipped in turpentine and the wax with a little heat and a soft cloth.

The gun engraver now has the ornaments in relief with the background eaten away. He proceeds to use his engraving tools for the purpose of cleaning out ragged lines, cutting out fine points of leaf work, and—very important—the shading of leaf work. It may be that you wish some modeling of the ornamentation which has been etched out. All this is done with different tools and punches, and the one who knows his profession is capable of producing a most beautiful piece of work. Matting of the background will add much to the work.

Of the few useful articles which can be decorated to a high degree without marring their beauty or efficiency, the rifle, shotgun, and hand gun are foremost. The prevailing idea that engraving is very expensive is without foundation. Because of their erroneous ideas many sportsmen would rather have a plain gun. A firearm devoid of any engraving looks very well when new, for the coloring of the bluing or case-hardening on a shotgun action supplies the requisite ornamentation. When the firearm becomes a little worn, the hardened surfaces begin to assume a far different color, especially on a shotgun. When the bluing begins to wear off, it changes the steel to a dirty-white hue. The rich blue on trigger guards, bolt handles, forearm irons, etc., also wears down to the bright white metal. On shotguns, the joints between sections of the action and barrels become too apparent and are obtrusively to the fore, and the gun offends the artistic eye more and more as time advances; whereas, the wise expenditure of only a few dollars for some fine scroll engraving would furnish lasting decorations. The greater the wear, the more the fine qualities of the engraving and graceful outlines of the arm appear. Figure 156 illustrates various designs that can be used either for etching or engraving.

Many object to engraving because the weapon cannot be so readily kept clean; therefore, the lines of the engraving should be kept shallow so that the engraved surface is as easily cleaned as any of the plain parts. The real objection appears to have been the practise of high relief work on cheap arms; the difference in quality and price dependent upon the amount of engraving rather confused the buyers of these arms. The natural effect of this was that such engraving was a comparatively cheap process badly cut into the metal. These inexpensively produced arms had a few dollars spent on the engraving and were sold as, and represented to be, arms of the best grade. These guns mostly came from Belgium and Germany and importers sold them at extremely high figures.

Of recent years the demand for highly engraved guns has greatly increased, and because of these demands I have sent all my work of this type to Mr. Kornbrath. He has supplied some beautiful specimens of decoration, as the cuts will show. In some instances the work consists simply of scroll design, while others are of sporting subjects chiseled in low relief in the metal itself; in others, the decorations have taken the form of allegorical figures embossed in high relief upon the floor plate, guard, and barrels, in gold, platinum, and other precious metals. The cut which has an Indian design upon the floor plate and guard of a Springfield is one of the finest examples of the engraver's art. Naturally, a masterpiece like this greatly enhances the value of a gun, and it is an easy matter to spend a thousand dollars upon decorations alone.

In the engraving of guns for customers, the usual recommendations are not elaborately engraved decorations unless all other parts are within keeping; these comprise beautifully figured wood, barrel and fittings perfectly blued, and fine checkering or carving. The money so expended, if it could not be spent to better advantage in workmanship on metal and wood, could at least be so expended that attempts to misrepresent the cheapness in workmanship would be rather misleading. Appreciating to the fullest extent the real worth of appropriate engraving upon firearms, I never care to have the finest arms bare of decoration so that when once the gloss of newness has gone they present a bald appearance.

Fine workmanship is in itself an excellent indication of quality, and fine mechanical skill is more noticeable in perfect fitting and outlines. Ornamentation or engraving is probably more noticeable than any other point on some firearms. Decoration need not be wholly confined to the engraving of lines; the greatest beauty of all is the graceful contour of a well designed gun, proportionate in every part, boldly outlined, yet gracefully turned where too sharp an angle would offend the eye. Then, too, the checkering upon the pistol grip and foreend not only enables the user to obtain a surer grip, but is in itself very attractive when well laid out and skilfully executed. The well engraved gun will have every bolt, every pin, every part, not only proportionate, correctly fitted, and well made, but so placed as to be of actual service and its position utilized in the usual scheme of decorations so that upon close examination it would appear that, without that most minute line or point, the weapon itself would be incomplete.

The gun lover must face the fact that the game

Fig. 157
Colt caliber-.45 automatic pistol. Figures in gold and platinum inlay. High relief work. Note the steer's head carved in the ivory grips. and the diamonds set in for the eyes. A beautiful work of art

of America is disappearing year after year, the ever-increasing army of hunters—as well as the bag limits—growing slimmer. It would almost seem as tho the sportsman and true gun lover must take the greatest pleasure in arms themselves, and handle and look upon their beauty day by day; therefore gun makers must turn out arms of greater beauty so that these men can take their keenest pleasure in dreaming of their performance, their fine appearance, and lastly their art value, of which he can be justly proud when an artist has carved upon its steel surface figures of game that roamed our mountains years ago.

It will be well for the beginner to study the best designs of gun engraving and not copy some of our American arms manufacturers who only place a lot of meaningless lines on a gun. Usually these arms are covered with heavily carved scrolls which are a disgrace to a weapon; to copy these is out of the question. I have seen well-made American arms on which the makers went to the trouble of stamping dogs, ducks, geese, etc., on the sides of their guns to give the appearance of a high grade or a little better grade than the ordinary. Engraving such as this may catch the eye of the novice, but to an experienced rifleman it cheapens the weapon. If engraving is to be used, have it executed by an experienced engraver for a few dollars which will offset the plainness with real hand work and include a bird dog, or even some game scenes which would add greatly to the beauty of the arm.

The British engraving consists usually of very fine scrolls forming small patterns, and not the large free-hand sprawling lines of many of our designs. Fine English scroll is beautiful, and to be fully appreciated must be examined closely with a magnifying glass. These designs should be copied; the charm of this work is that it is not obvious at a distance.

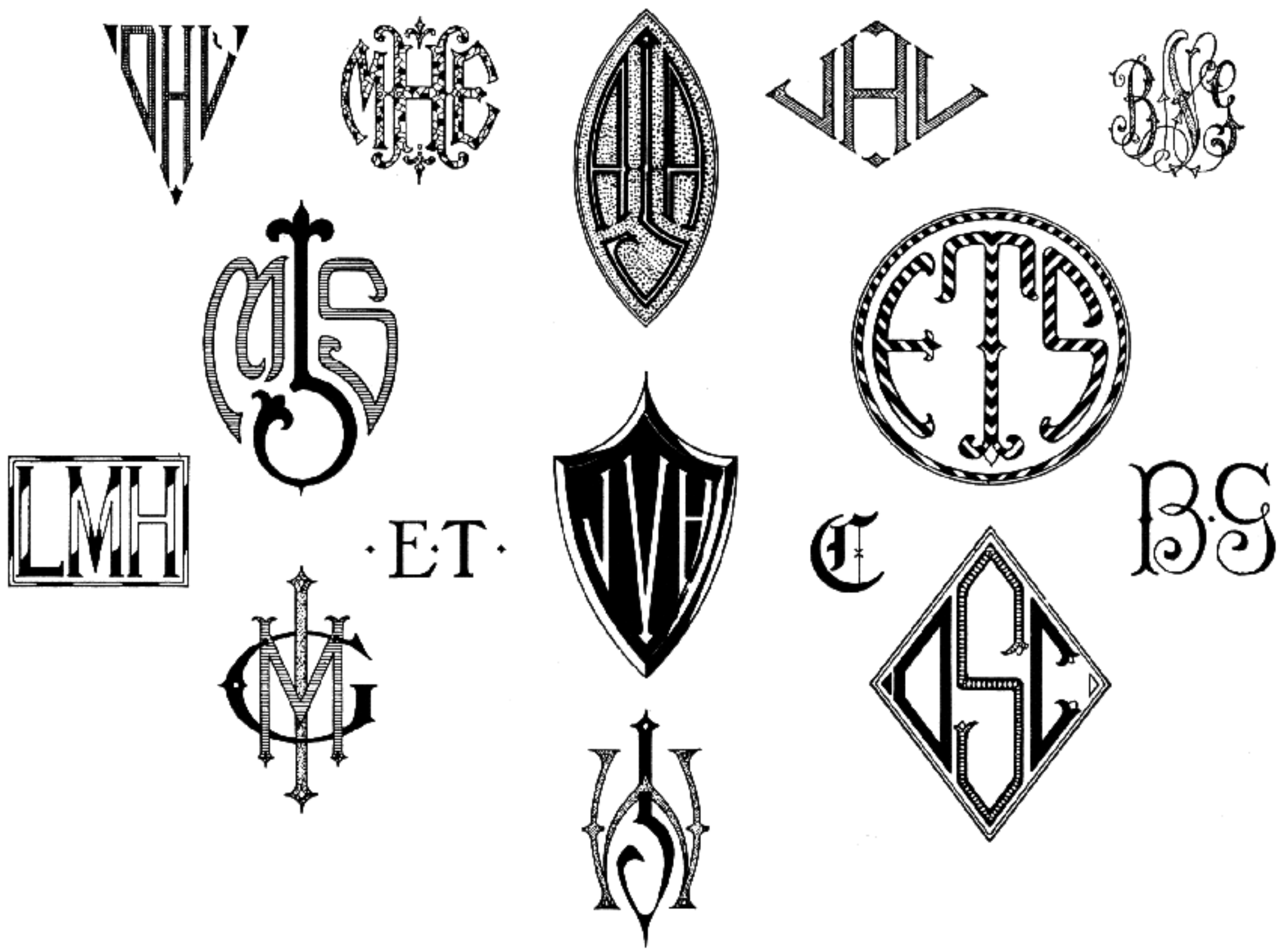

Fig. 158
Initials for monograms, engraving, etching, etc.

Figures such as dogs, birds, deer, moose, elk, and one's initials or monogram, appear to better advantage when finished in gold. The outlines of the animal or letters are first chiseled, and dovetails are cut or chiseled up along these outlines with small chisels of various sizes with round and flat points or edges, straight lines with straight points,

and curved lines with round points. Steel is thrown up to anchor the metal in various places and then the pieces of gold, which consist of 24-karat gold *wire*, are laid beside each other and hammered into place, one at a time, until the figure is filled with gold. The use of a flat punch over this gold will force these gold wires together and the connections between them will not show when the inlay work is completed. The edges are then trimmed and full details are carved or chiseled out, even to showing the hair. Figure designs are rather difficult to engrave, and it will be well to practise on a steel or copper plate before any attempt is made on a gun part. If you are able to draw all the animal designs illustrated in this chapter, and transfer them on metal, you are an artist. When using gold, do not have it stand out boldly as tho it were hung there; it should be in the form of a relief design and constitute a part of the engraving itself. Relief work consists usually of nature studies drawn from nature with a pencil. Do not try to engrave until you are able to draw successfully with a pencil. You will only increase your difficulties so much that you will be dismayed and give up further effort. Choose a simple nature study for your first relief engraving, small and yet effective, such as small leaves, ferns, etc. Do not have one leaf cover the whole action, but place a number of small ones connecting with each other, their stems forming other parts of the design. Many times your efforts will be lost, but there is always a way to correct a bad slip of the graver.

Often the owner of a fine gun, or a person about to have one made, wishes to have a scene from one of his hunting trips engraved on a part of his gun. This is possible not only with pictures of trips or trophies, but with pictures of hunting dogs. All can easily be incorporated by the experienced engraver, and also by the student—after considerable practise. If you are not able to carry out the chiseling effects, allow the work to be done by the etching process.

Engraving, as you know, is cutting lines into the surface of a gun part or any other steel surface. Such work should be done with fine, firm lines cut into, not scratched upon, the metal surface. All, of course, depends upon the artistic sense and skill with which you are able to execute the work. Any design may be traced upon the metal and cut up to a certain degree. Very fine scroll work is the accepted standard, for these lines best adapt themselves to the first requisite of engraving from the gunmaker's point of view, namely, the hiding of

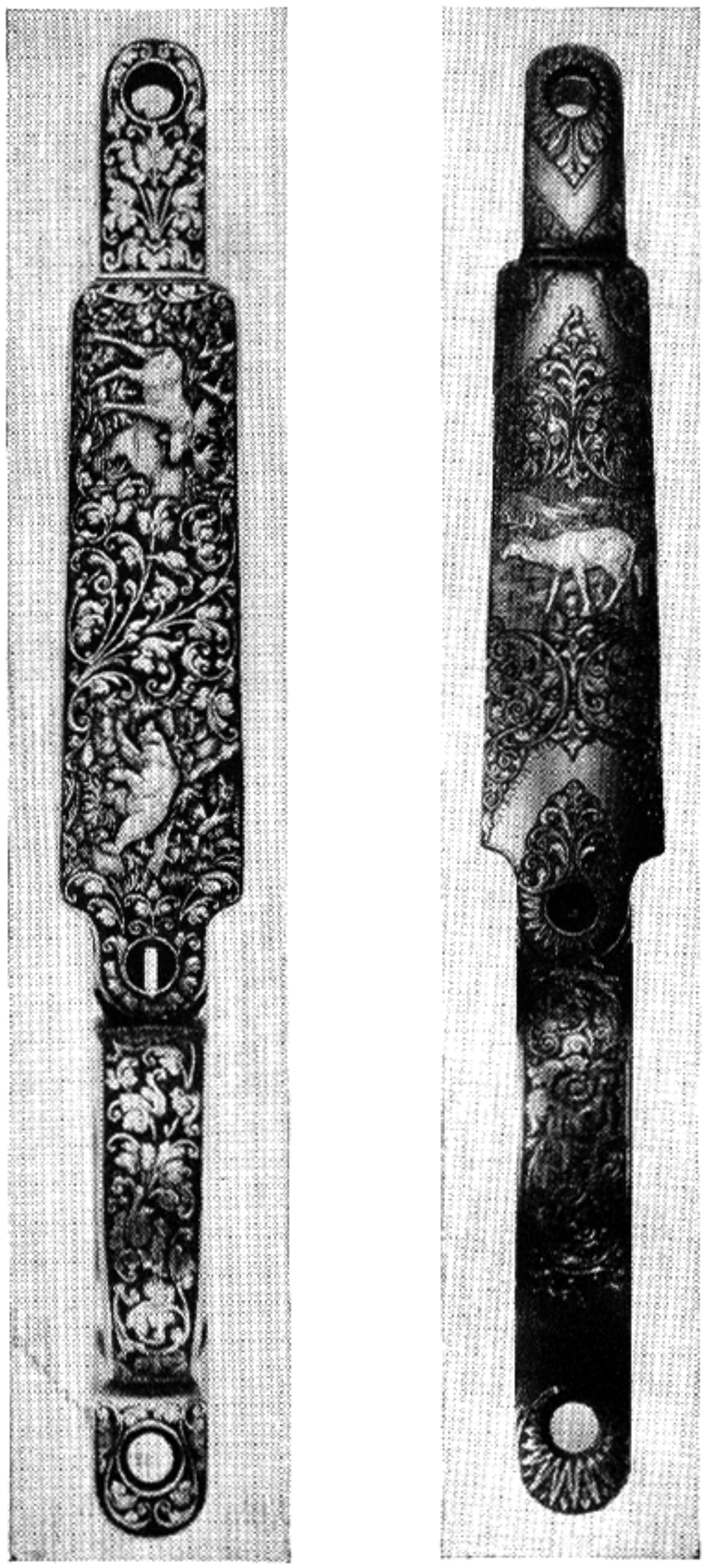

Fig. 159
Springfield magazines and floor plates. Animals in gold. High relief work

Fig. 160
Model 39 Marlin rifle, caliber .22, engraved with snake and bear in gold. High relief work

joints, screw holes, ugly straight lines, obtrusive pins, etc. The gun engraver should by no means neglect to make screw heads, pins, etc., constitute part of the decoration. The engraving of animals, bouquets, and other subjects demands greater skill and a clearer perception of artistic effect.

The use of tools and their proper angle to the work is one point which must be realized through experience. To hold a tool at the correct angle so that the perfect fine lines can be produced is a matter of long hours of practise; not impossible after you chisel out some sample pieces on cold-drawn steel plate. Then you can study the effects of the various pressures you have been applying with the hammer upon the end of the handle where the graver is inserted. Rigid rules are a means of becoming perfect, and in the end your work will show a vast improvement. This class of work brings your artistic ability to the fore, and from such constant application of your efforts you will become an artist of a fine order.

CHAPTER XXVII

Appraisal of Craftsmanship

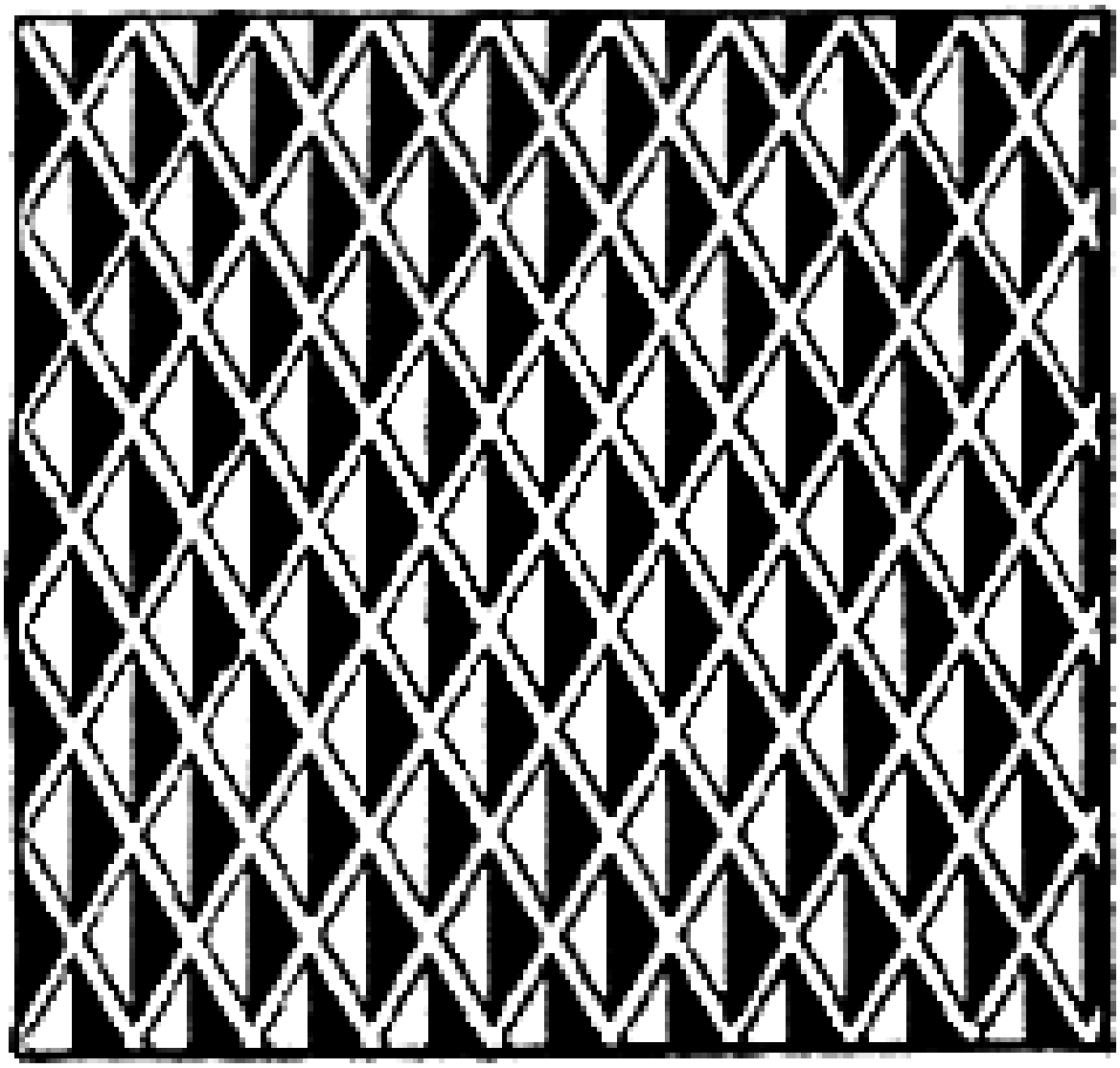

CHAPTER XXVII

Appraisal of Craftsmanship

WE ALL, as we pass through life, pick up and absorb preferences which ultimately determine our standards. An interesting feature of this is the wide divergence of preferences and the impossibility of their reconciliation. That even this is good is at once apparent, for the likes and dislikes of each of us supply the infinite variety that is the spice of life.

Fortunately most preferences are the result of personal satisfaction and are therefore honest and free from mere prejudice. Good workmanship, freedom from break-down, reliable average performance, should and do constitute favor. Still there is something more than this, something often quite indefinable, which nevertheless invariably tips the scale in one's estimation. Nowhere is it more surely evidenced than in the choice of a gun. There are three kinds of people who buy guns. One type buys them merely to kill things with; to these they are merely a tool. A second loves hunting and guns equally, and as his skill increases he delights in making the quest more difficult and the means more exacting. To him a gun is never a tool—it is of all his inanimate possessions the one most loved. It is the companion that he takes into the solitudes; it is the lengthened finger with which he secures his quarry; it is the instrument upon which he tests his skill. This man's hunting season embraces the whole year, for his beautiful weapon is never hidden away. It has an equal share in his hunting stories, it is associated in his happiest memories. It is his "gun." The third type is the gun-crank pure and simple, he to whom hunting is merely the opportunity to test out a formula or attempt the impossible. To this last group we must always stand indebted, for the endless quest of its members has brought us the improvements and developments that make the modern gun so efficient and beautiful. To the great second group, however, do we turn as we contemplate the gun and its uses and philosophize in our own little way. Its members generally exhibit the balanced opinion. It is for them that we like to make guns.

We believe that outside of the general utility in a gun, balance, by which we mean the harmony and proportion of all its parts and the beauty of lines, is the most appealing. And nobody has ever been able to get beauty and harmony into a gun who did not first have them in his soul—who has not made guns first because he loved to make them and secondly because they were the means through which he secured his bread and butter.

Now when we come back to our subject and attempt to appraise craftsmanship we must not lose sight of this last statement—that guns made by men who love guns and who try to express themselves through them, will always be better guns than those made by a machine, however ingeniously or skilfully turned out.

I am going to talk to you for a few minutes about some of the salient features of good guns, and I want you to be kind enough to let me use as examples two well-known makes—one American and one British. I pick these two from the long list which embraces all nations, not because I claim superiority in them to others, but because they are representative makes, are associated with generations of gunners, and are familiar names wherever guns are talked of. Please do not accuse me of being prejudiced or invidious when I mention the names of Westley Richards and Parker Brothers as hooks upon which to hang my thesis. Westley Richards' inventions are an important and integral part of every modern double gun—cocking by means of the barrels, the box lock, the top lever, the fore-end ejector. And as to our good American maker, I am sure no other maker in America will be so ungenerous as to feel annoyance that we should use the famous old firm as our native exemplar.

Both of these makes, as it happens, are identified with the box-lock style of mechanism, Parker Brothers exclusively, Westley Richards predominantly. Now it happens that I am among the warmest admirers of side-lock guns as made by the great London makers, and admit, offhand, their inimitable beauty; but I do not hesitate to say that, aside from this, they have no advantages over the box-lock and that to be of equal quality they must inevitably cost much more. This, therefore, gives us our first suggestion; namely, where cost is an object you will always get a better gun for your money in a box-lock gun. It may be urged that I am not giving proper consideration to the dismount-

able qualities of the side-lock; to this I answer that if you must take your gun to pieces, Westley Richards' detachable lock system enables you to do this with no tools whatever except your fingers. We shall enlarge upon this later.

Over-and-Under Guns — When discussing the best quality of modern workmanship, it is well to bear in mind the practical achievements of the past. In short, sum up their all-around advantages and make comparisons of them with further modern advances of proved inherent utility and design in all points made under a wise supervision to ascertain what is the best type of modern gun to choose. Since reference has been made to the Westley Richards arms, a description may as well be made of some of the fine points of their "Ovundo" or "over and under" principle of design as presenting a wonderful example of a high-class arm in this style. The Westley Richards "Ovundo" gun, top-lever action, embodies all the well-known features of the makers, such as the new quadruple grip, top safety bolt, Westley Richards ejector mechanism, hand-detachable locks, hinged cover plate, and their reliable one-trigger system. These guns are box-lock guns but have dummy side plates resembling a side-lock gun. These are used so that opening traps in them may be provided enabling the one-trigger mechanism to be oiled with a tip of a toothpick and kept properly cleaned. For applying the necessary oil, the ordinary gun must be stripped down—a practise to be avoided except by a trained mechanic. These side panels obviate this difficulty and constitute another superior advantage of the "Ovundo" construction. The illustration shows this feature both in rifle and shotgun. (See Figures 161 and 162.)

The main principle of design, together with perfect craftsmanship, must be a prime consideration; for if a gun, no matter how well made, is constructed with a working movement which presents great strain and great friction, such designs will speedily wear out. Some would advance the idea that this would be the case of an over-and-under gun because some peculiar strain and friction cannot possibly be avoided. It is not so in this present day and age when the finest materials possible go into construction. This is true of materials as well as workmanship. The great modern advances in the chemistry of alloys has given us steels of hardness, ductility, strength and non-corrosive qualities that exceed everything hitherto available.

Figure 163 shows an important part to decide upon—the principle of the locking features. No special rules can be given to govern the formation of this selection other than simplicity and safety—always worthy of favorable consideration. Naturally, the greater the simplicity the better, provided it works to the full accomplishment of all the ends desired. Next to simplicity may be selected durability, and next to this may come the principle of good shooting and safety of the arm. The Westley Richards "Ovundo" gun, whether in a rifle or shotgun, was not designed to satisfy a natural desire

Fig. 161
Westley Richards "Ovundo" gun. The shotgun

Fig. 162
Westley Richards "Ovundo" gun. The rifle

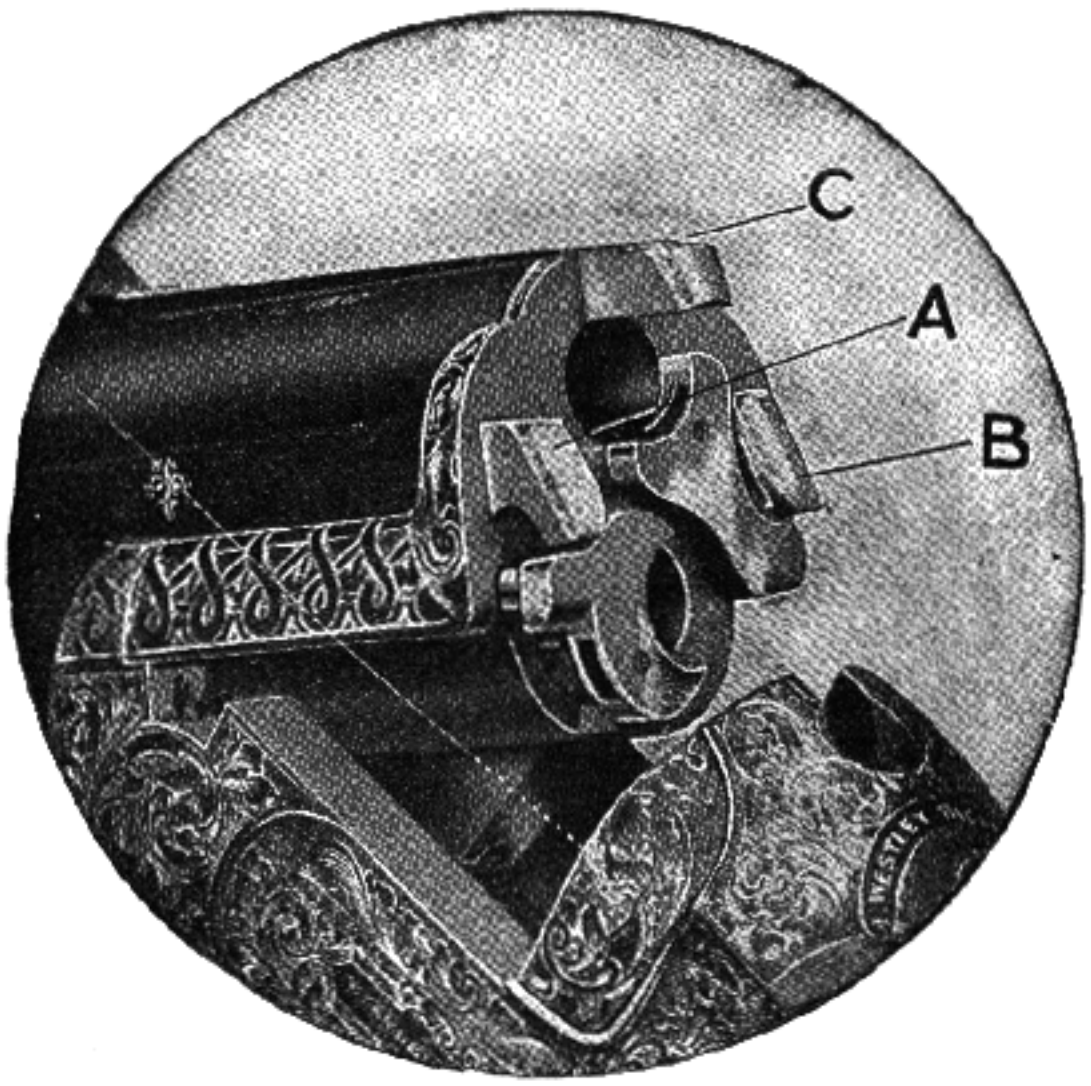

Fig. 163
Westley Richards "Ovundo" locking features

for a change, but to achieve definite and important ends, the chief of which was to provide a narrow, convenient, and well defined aim line to hold the eye, as opposed to the obstruction formed by two barrels and the connecting top rib of the ordinary "double gun" over which the eye can stray at large.

There is little doubt that the narrow sighting base throws into high relief errors in aiming and is therefore an advantage. Placing the barrels one above the other instead of side by side secures a high advantage, and permits a better view of the object at the moment of aiming than is possible with the side-by-side construction, which often obscures the object entirely and causes hesitation instead of that quickness of trigger-pull that is so important an element of successful shooting.

The extensive use of guns designed and constructed on lines of the particular over-and-under models here illustrated enables me to offer a gunmaker's opinion concerning their general characteristics for sporting uses. A casual acquaintance with mechanical principles will assure the owner of one of these guns that all vital matters connected with opening, closing, and firing have received very favorable comments. Naturally, an inspection reveals the agreeable features of simplicity, strength, and easy working, without going too far into technicalities. Effective discharge is insured in the gun locks constructed on the detachable principle. A pair of extra interchangeable locks which can instantly be inserted into the gun are a complete insurance against having any hunting trip end in failure.

Detachable Locks — One of the latest improvements is the permanent attachment of the coverplate to the body of the action by means of a hinge which can be opened and closed in the same manner as the lid of a watch case; the locks when removed will remind you of a watch with its beautiful finishes. It is very interesting to discover that each lock in this type of gun functions perfectly with nearly seven limbs, as compared with double that number of parts found in the usual side lock of ordinary guns; this fact may be verified in the simplest manner, for these locks can be instantly removed with the finger and thumb without the aid of any tool to facilitate inspection, cleaning, and oiling.

The mechanical arrangement of barrel and breech fittings insures rigidity and firmness to withstand the repeated firing, which may extend over a lifetime of use. The ejecting mechanism in the foreend of the stock, with an improved one-trigger, fires the barrels in any order, right-left or left-right, continuously, as may be found expedient.

Many sportsmen who come to my shop are rather inclined to doubt the utility of guns made on this principle. They probably overlook the fact that invaluable assistance is rendered by the less obstructive hindrance of barrels placed one above the other. Close observation of the habits acquired in game shooting will reveal the slight pause made by many shooters prior to pulling the trigger. This is caused by the natural desire to obtain a better view of the bird at the moment the gun butt reaches the shoulder. They cannot have the mind and trigger finger work together, because the bird is wholly or in a large measure obscured by the width of the side-by-side barrels, and while the time thus occupied may be scarcely measurable, it may comprise the whole of the difference between killing and missing the game. This desire to get a clear view of the bird is common to all shooters, and is responsible for more failures than any gunstock misfits, poor ammunition, and all other alledged causes put together. It seems to me that, while it is not in human nature to overcome this difficulty entirely, those who acquire a reputation as fine shooters have found the method to counteract the adverse effects of these habits. Where none of these rules can be brought to bear it is natural that the inexperienced gunsmith or gun lover should turn to these chapters for aid in forming judgment upon the quality of any gun; hence a few unused ideas may not be out of place.

All the movements of the action should be smooth and all the joints should fit perfectly. The locks should have due consideration; when the gun is opened it should break down without much effort. The increase or decrease of power should be

extremely gradual and not great. Throughout these movements there should be a quick locking of the bolt as the top lever is released. In cocking the arm the locks should emit a clear ringing sound as the sears engage the notches. When once heard, this too can never afterward be mistaken.

We now turn to the chambers and the seating of the shell. The counterbore of the chambers and the length and width of the action bed should be closely observed. The counterbore should be cut clean and deep enough to take the rim of the shell without leaving the slightest projection, else the arm will not close properly. But if, on the contrary, the counterbore is too deep, the shell comes back upon the standing breech before the charge makes its exit, which is a means of increasing the recoil and renders accuracy less certain.

I find that the over-and-under guns assist shooters in another way; this is in the shape of the forearm, which in form and substance differs considerably from the shallow fore-end usually attached to double guns with ordinary barrels, as the fore-end of the previously named gun covers the lower barrel entirely. Such increased depth fills the forward hand most comfortably, and prevents the awkward overlapping of the barrels with the fingers which many users find a serious hindrance to correct aiming. This changed form of the forearm in over-and-under guns is often to be commended as giving a much firmer hold, thus increasing the user's command over his weapon and conferring facilities for increased speed in gun swinging and in raising or depressing the barrels. Motions are not well assured by the rather insecure hand-hold obtainable on the customary forearm of the older type of gun.

Let us go back again to the detachable lock system, as seen in Figures 164 and 165. Each lock in this construction becomes a separate unit, acting in complete independence of the other, which it cannot in any way disturb; by such

Fig. 165
Westley Richards detachable lock

a method greater efficiency is secured under the stress of repeated firing. Some men superficially argue as if such a refinement were but a selling point for the fashionable trade, and had no practical utility; such an opinion, however, could not be held by any one with a sound knowledge of gun-lock construction and requirements. This design omits useless and disturbing limbs, and from these improvements there result other subsidiary advantages in the construction of high-class guns. At the same time it maintains the hammer and striker in one piece and so removes the need of a separate striker—always a possible danger of breakage. Whatever merit lies in mere detachability is best exemplified, in my opinion, by the freest and simplest of all designs in firearm construction.

Single Triggers — There is perhaps no part of the modern gun so vital as the one-trigger mechanism, and I shall hail the day when all double guns are equipped with such an improvement. In principle it is a distinct aid to quick shooting. Its instantaneous action confers a great advantage upon the user; comfort, celerity, and reduction of personal movement contribute to a greater proficiency. It secures the same length of stock for both barrels instead of the two different lengths inevitable in a two-trigger gun. How many sportsmen have considered that the rear trigger of a two-trigger gun is usually placed about three-fourths inch behind the front trigger from which the stock length is secured; consequently the user is compelled to

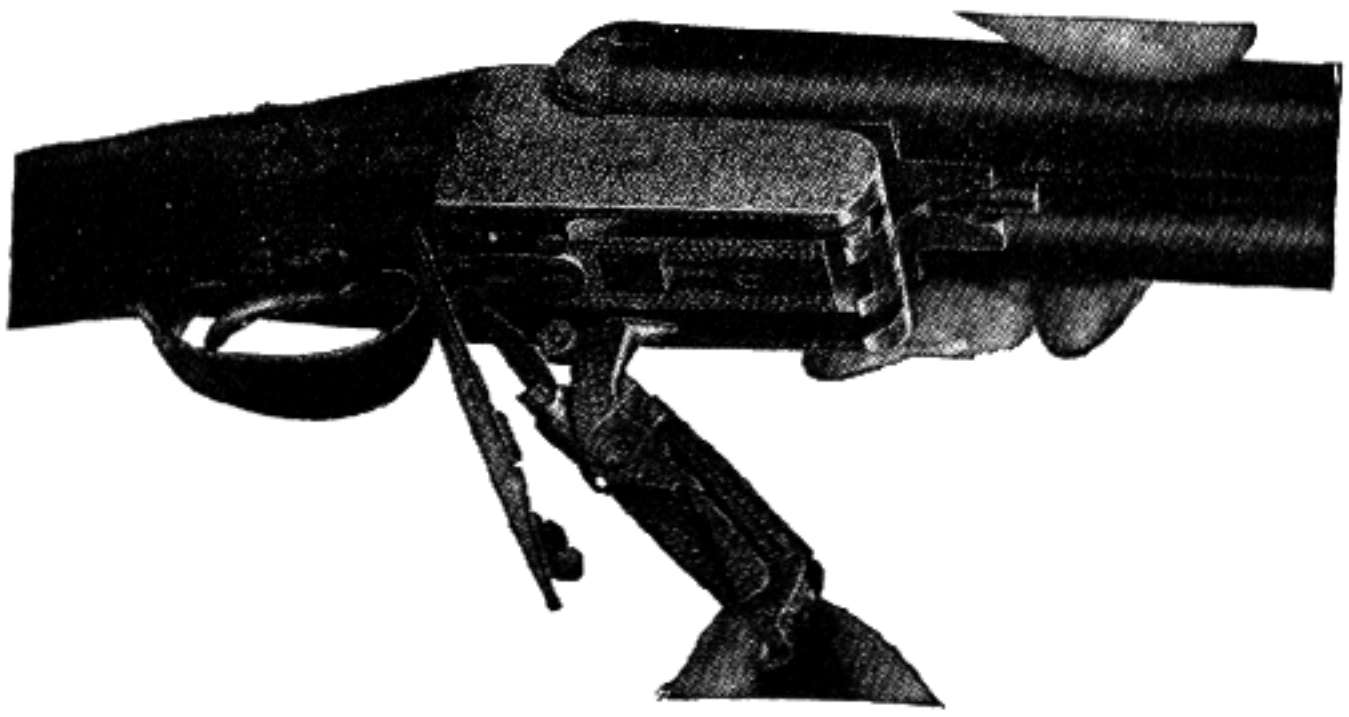

Fig. 164
Westley Richards hinged cover plate

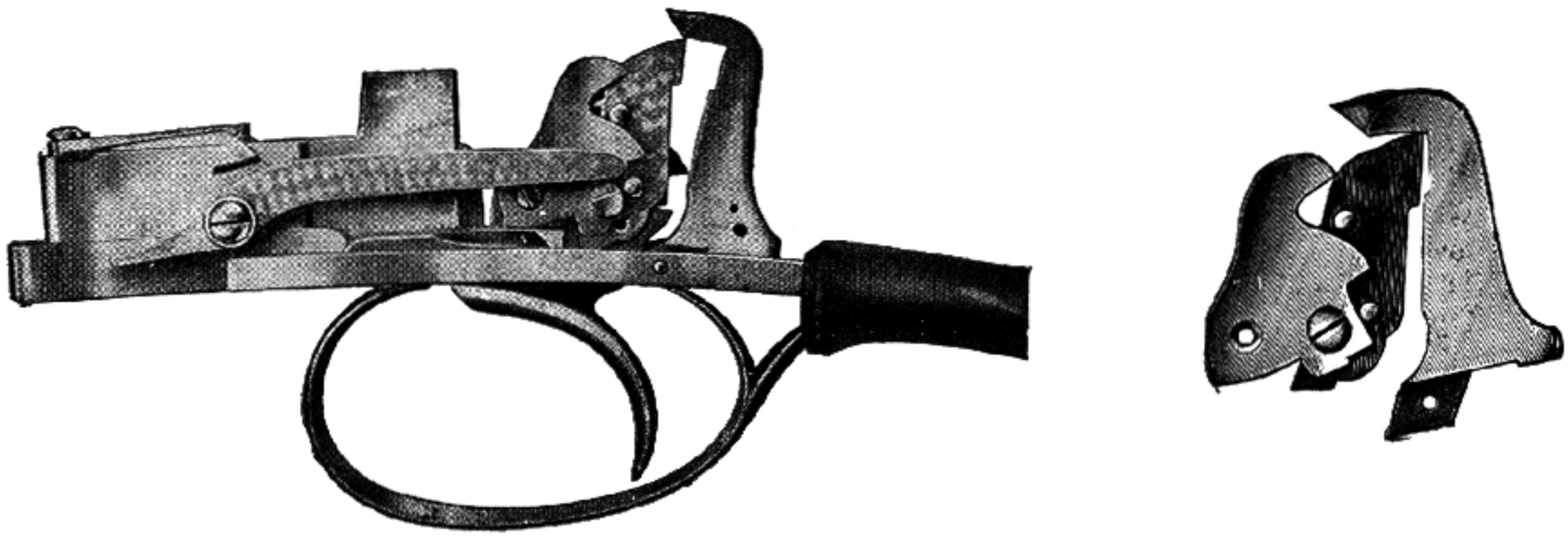

Fig. 166
Westley Richards single-trigger mechanism

shift his hand and adjust his aim each time he fires the two barrels in succession. Not so with the single trigger; there is one length and one constant adjustment for both barrels.

The principles underlying the single-trigger mechanisms of Westley Richards and Parker Brothers are fundamentally the same. Both mechanisms have been refined and perfected by experience. Both are selective, both are on the two-pull principle, both act independently of recoil. The workmanship in both is the very best.

These advantages, briefly stated, are provided by Westley Richards' and Parker's latest design of one-trigger mechanism. That was their original designation as it is today, but here guidance above all other points is often required. During many years past there has been issued a variety of single-trigger systems, many of them, whose faults have been laid to the principle itself, defective in the methods adopted. There never is a limit of any mechanical differentiation involved, and opinion is often expressed without the slightest attempt to distinguish one method from the other. Such an outlook is really deplorable, because it involves in a false estimate the conclusion that all methods of constructing and designing guns with one trigger instead of two can be classed together, in a sort of round-up; good and bad alike are refused that critical discernment which should naturally distinguish one class from another, with the result that the faults of the bad ones are applied to all, including even the best conceived design, altho the Westley Richards system, at least—as Figures 166 and 167 illustrate—is fundamentally free from vices in action which are inherent in all single-trigger systems whose limbs are controlled by or subject to the action and effect of recoil.

The vibration set up by the explosion of the cartridge and the movements of the gun under recoil are disturbing elements, and they vary greatly

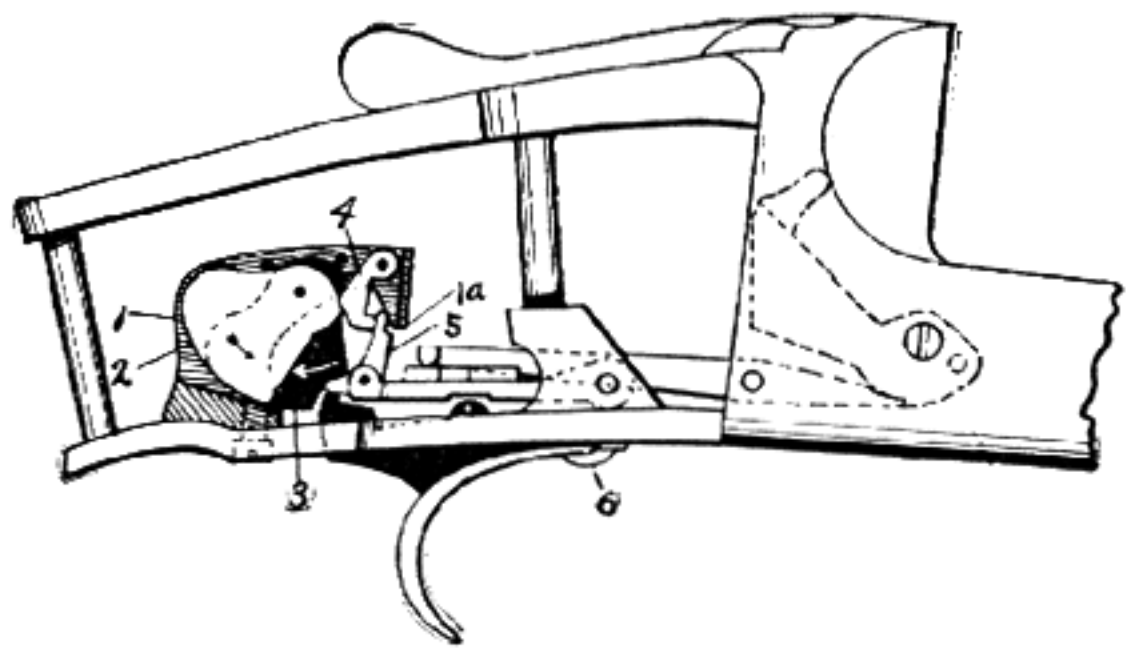

Fig. 167
Parker Brothers single-trigger mechanism

in an act. A mechanical device which is governed by such inconstant agents cannot possibly assure regularity of action, however ingeniously designed or constructed and even carefully made. That fault was evinced in the original three-pull system when snapping off without cartridges. Such a trigger mechanism required three pulls to operate the two barrels. The second or intermediate pull is actuated by recoil—which is variable and admittedly cannot be relied upon. This trigger system unfortunately started with the handicap of an erroneous conception which has led to much unnecessary confusion and disappointment.

In order for a single trigger to be absolutely reliable it must be a two-pull mechanism, and its action must be independent of recoil. The first necessity was to break completely away from false estimates of the condition to be met and to receive a clear idea of a principle immune from the faults attaching to a system built upon such an error. That is only to be found in a mechanical device which is not subject to the effects of recoil; the recoil can neither stay nor accelerate, and is operated at the shooter's will as quickly or as deliberately as it pleases him, whether under light, heavy or indeed any variations in the effects produced by the cart-

ridge discharge. These ideas are attained in the Westley Richards and Parker one-trigger mechanism.

Recoil is not employed to operate the mechanism and there is no long draft of the trigger in firing either barrel; both pulls are short, clean, and quick, and thus imperative to perfect holding and shooting. They have perfect selective action; either barrel can be fired at will followed immediately by the second barrel. The shooter, therefore, never has to fumble with his trigger or place himself into exceptional postures—awkward and therefore fatal to accuracy—in order to fire double shots. The action is easier and more natural than firing a two-trigger gun, and considerably faster. It makes no difference how the gun is fired or what a shooter's peculiarities may be, either in pulling the trigger or handling the gun. It acts just as perfectly, regardless of recoil, and will always act the same.

In referring thus to one American and one British firm of gunmakers, I am by no means denying that good arms are made by others makers, whether in England, Germany, Belgium, France, or the United States, for this would be going wide of the truth. There are some gunmakers in all these countries who turn out the finest the world has seen, and the most costly. But exterior finishes should never be a guiding point of selection. Often arms are models of perfection in outside appearance, but when the best shooting is ascertained it is often discovered that they have not proved themselves superior. To be more substantial in my remarks, the less finely finished and less expensive guns of the American manufacturers have given the American product an enviable reputation throughout the world. Naturally there is a separating line in the purchase of a cheap gun, and when funds are low it is much better to secure a gun of American make than one of foreign manufacture. On the other hand, when we choose the very best we must go to England and select a British gun, for we have not developed that high quality of workmanship which is so essential in fine arms of a better type, when conceived with wonderful ingenuity of purpose, where the cost goes over one thousand dollars. The prohibitive duty placed upon the best arms coming into the United States causes me to agree with Will Rogers when he calls the United States "Cuckoo Land."

Figure 168 illustrates Parker's Invincible, one of the highest-grade guns made here in America, a beautiful example of skilled craftsmanship. A "best" gun, in my opinion, is one perfect in design, simple and efficient in its parts, fashioned by the most skilled hands, with each component mechanically disposed and cunningly interrelated, and adjusted with precision. Such a gun should exhibit, in other directions, qualities of corresponding attainment; barrel-cuppling and exact shape and size of internal portions finely bored, gauged, and finished, thus insuring the proper action for attaining the best workable velocities, complete regularity, and even pellet distribution. A gun of this kind provides the most desirable balance, and by reason of the disposition of parts, spring, weights, and diameter assures pulls capable of fine and lasting adjustment, which can be readily effectuated to suit individual wishes and taste; also an efficient system of ejectors and a reliable selective single trigger independent of recoil. Finally, it is one whose product of constructive craftsmanship is reflected in the exterior lines, which present a happy symmetrical effect.

Fig. 168
Parker Brothers best shotgun

The locking of the barrels in the Westley Richards and the Parker guns presents perhaps as wide a divergence as will be found in any comparative systems. Messrs. Westley Richards have always been the exponents of an elaborate and emphasized bolting system consisting of the usual Purdey under bolts and a "doll's-head" jointed on the radial curve and locked with a sliding bolt. This is an expensive plan and requires unusually

Fig. 169
Another Parker Brothers shotgun

close workmanship. It is obviously impossible in cheaper grades or in machine production. Nevertheless, we all must admit its great strength and thoroughness. Messrs. Parker's system, in comparison, seems ridiculously simple, for only one of the bottom lumps is bolted and the top extension provides little other than a guide to the extractors. Yet so adequate are the contact surfaces and so positive the bolting that no criticism whatever can be leveled aginst it. Rather we must all congratulate the makers that they have achieved such good results in so simple a manner.

No higher recommendation can be given any gun than is found in the bare facts about a certain Parker which came to me for repairs. The owner purchased this gun in 1897; it had Damascus barrels of the A.H.E. grade. It needed tightening of the action, a few dents removed, the stock repolished, and barrels and action refinished. This was the first time this gun had ever been in a shop for repairs—convincing proof of the lasting quality of an adequately priced gun! The average layman will be prone to state that better materials and workmanship were placed in the arms of thirty-six years ago, but he forgets that we in the mechanical field are gradually advancing in a cycle of evolution and year by year see improvements over the past, be they ever so small. The fact must never be forgotten that the world owes its progress to men who could see beyond their noses, who could conceive of things no one had actually seen. "Everything that is attained starts with a dream of it," is a saying we all know to be true, yet we go on forever giving the big rewards to the doers. The man who can only dream lives in a hostile world, as I have found. His real world is in his mind, and when he steps out of it into human society he is only a stranger and alone. To be successful he must combine his dreams with accomplishment, for the world of today is ruled by people who do things.

The eye teaches you to recognize at sight the predominating distinctions of fine craftsmanship. In cases where there are no means of ascertaining the quality of a firearm from the grade stamped or affixed or the test made by a responsible maker, the gunsmith will naturally be forced to turn to his own resources. What these are I cannot state. The firearm should be subjected to a most critical examination, in obedience to rules set apart for such examining, after which the shooting qualities should be thoroughly tested. To no apprentice should be entrusted such a shooting test, tho he should be at hand to learn these requirements while the work is being performed by an expert. When a man purchases a firearm he does it in the expectation of becoming the owner of a gun qualified to shoot well, and no matter how perfect it may be in various other respects, any deficiency in this particular is sure to rouse him to a high state of ire and dissatisfaction with the makers.

The exclusive models in Figures 170 and 171 give an example of this conception. They show products of superior merit, executed by the most skilled and disciplined craftsmanship within modern

Fig. 170
Westley Richards best shotgun

Fig. 171
A better example of Westley Richards best shotgun

command, while at the same time they display an application of the most carefully studied refinements of taste. Apart from their guaranteed efficiency and durability, there is an ingrained character in them, something presenting unusual attraction, an elusive quality of art, due perhaps to the subtle influence of inheritance and tradition.

Publishers' Photo Service, N. Y.

Fig. 172
There is some strange mellowing influence that prevails alike upon all men and women who shoot

CHAPTER XXVIII

Review of Military Small Arms

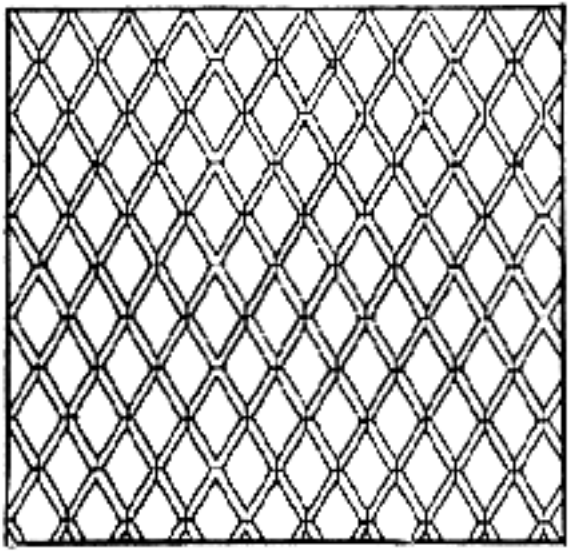

CHAPTER XXVIII

Review of Military Small Arms

MANY references to military arms have been made in these volumes. As the National Rifle Association sells military arms and ammunition through the Director of Civilian Marksmanship, it is in order to describe these weapons of different nations. Military arms are often the means of making very fine sporting rifles—by modeling them to the various ideas that your wishes may dictate. As our best sporting arms are constructed from such weapons, it is very desirable for the student to know them thoroughly, even if they are only to be used for experimental purposes.

The following detailed description is taken mainly from the *Textbook of Small Arms* published by the British Government, and the extracts from that work here reproduced are used by special permission of his Britannic Majesty's Stationery Office, London:

All military rifles of more modern design are breech loaders and are fitted with magazines which will contain five or more cartridges. The breech action, without exception, is operated on the "bolt" system. In this design a hollow cylinder of steel with a solid end is fitted with a handle and knob which is locked in position behind the cartridge in the chamber of the barrel, and together with the metal of the cartridge case, closes the breech against all escape of the gases of the explosion in a backward direction. The pressure developed by the burning powder is between 36,000 and 55,000 pounds to the square inch; therefore a considerable margin of safety may be allowed. The pressure is resisted, taken up, and transferred to the action body by one or more "lugs" which work in cut-outs in the action or receiver and serve as resistance shoulders.

The lugs are part of the bolt and are developed when it is machined to form in the manufacture. From a mechanical point of view, the best designs are those in which they are disposed symmetrically —so that the pressure is taken up evenly—and are placed as near the bolt head as possible in order that the bolt itself shall not be subject to stresses which are bound to be taken up unevenly by a long column of metal free to move within given gauging tolerances, in any direction. The bolt is hollow in order that it may contain the firing pin or striker, the main spring which actuates it, the cocking piece or bolt head, the sleeve, etc. The bolt is also fitted with an extractor, which is really a hook or claw to engage with the rim or groove on the base of the cartridge case and extract it from the chamber after firing. A safety device, in the nature of a lock to prevent accidental discharge of the rifle, is usually fitted to the bolt sleeve at the rear of the bolt. The receiver body or action, in which the bolt works, is screwed to the barrel. The interior is grooved or broached to allow the lugs to pass when the bolt is worked, and is recessed so that the lugs will be given a substantial bearing surface when in the firing position. The right side of the body is usually cut away to allow the formed cases to eject to that side.

Barrel design and form of rifling in all modern military rifles are very similar, but the real differences will be found in outside contour of the barrel, from a straight taper starting at the muzzle and reinforced at the breech. Various arms have barrels turned in the nature of steps, the object being to break up the barrel vibrations in firing. The barrels vary in length from 24 to 32 inches, and in caliber of bore they run from 6.50 mm. or 0.256 inch to 8 mm. or 0.315 inch, and in weight between 2 pounds 3 oz. and 3 pounds 5 oz. In all but two cases the form of rifling is that which is known as concentric or "Enfield," with four grooves (five in the case of the British short-magazine Lee Enfield). The two exceptions are of segmented or "Medoford" form. Of these the Danish Krag has six grooves and the Japanese rifle four grooves. The twist of the rifling is to the right or clock-wise, except in the cases of the Model 1917 caliber 30-06 or Lee Enfield British and French rifles. The Italian rifle has what is called a progressive twist.

The trigger mechanism on military actions, in every case, has what is called a "double pull" or preliminary trigger pull. In such systems, the trigger mechanism is so arranged that after a long light pull the motion is stopped, the firing pin being released by a further short and heavier pull.

In view of the fact that the military breech actions are all on the bolt principle, much ingenuity has been shown in designing them to function with considerable speed, regularity and safety. There

are many and important differences between the various types of these rifles. The main dividing line is between the "straight-pull" actions, in which the bolt is drawn straight back to extract the fired case and pushed straight forward again to feed in a fresh cartridge and lock the breech, and the ordinary "turn-bolt" action, in which the breech is first unlocked by turning the bolt upwards and then the cartridge extracted by drawing the bolt backwards. A new cartridge is fed in and the breech locked again by a reverse movement. Of straight-pull rifles the only ones now in use are the Austrian

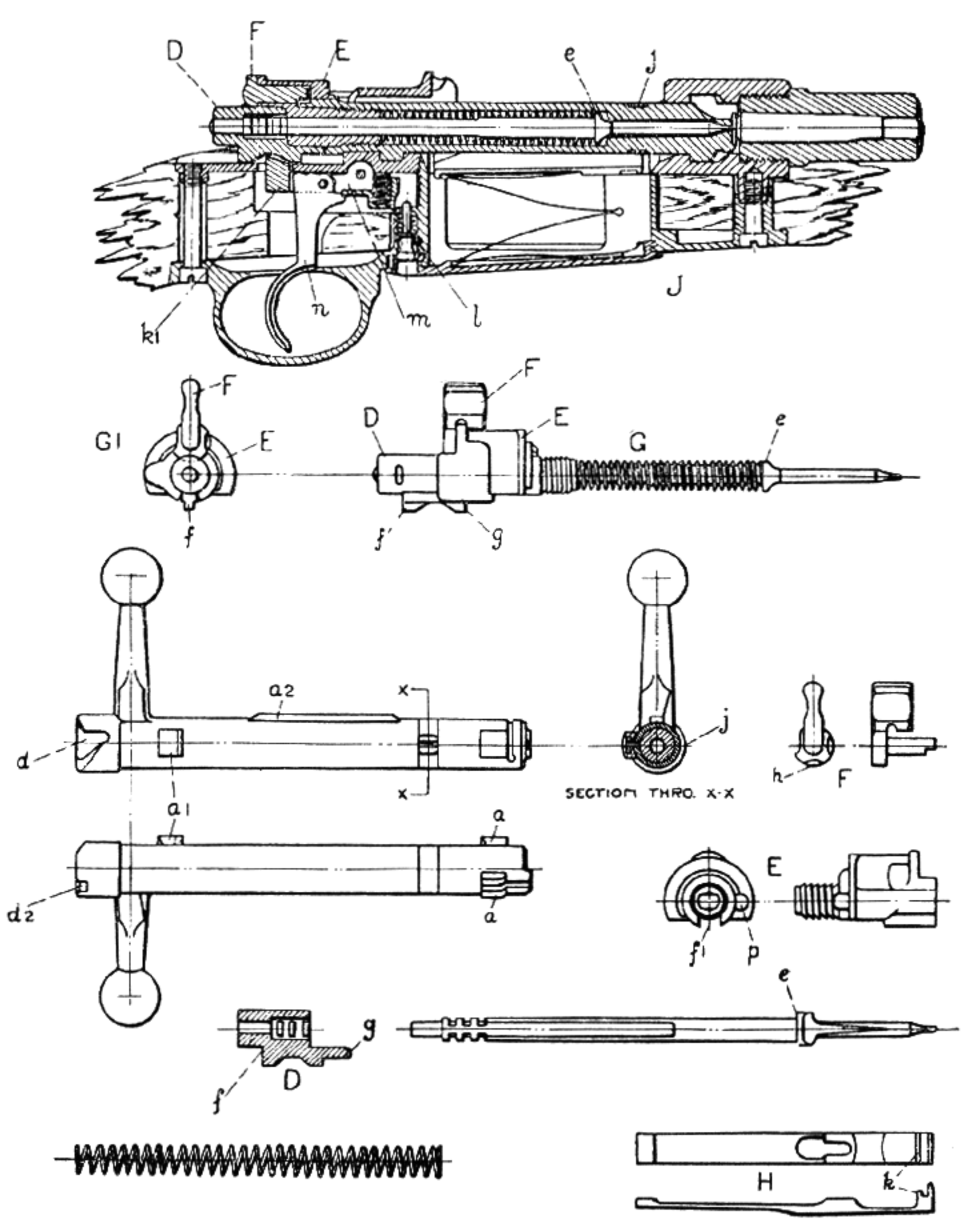

Mauser, Model 1904

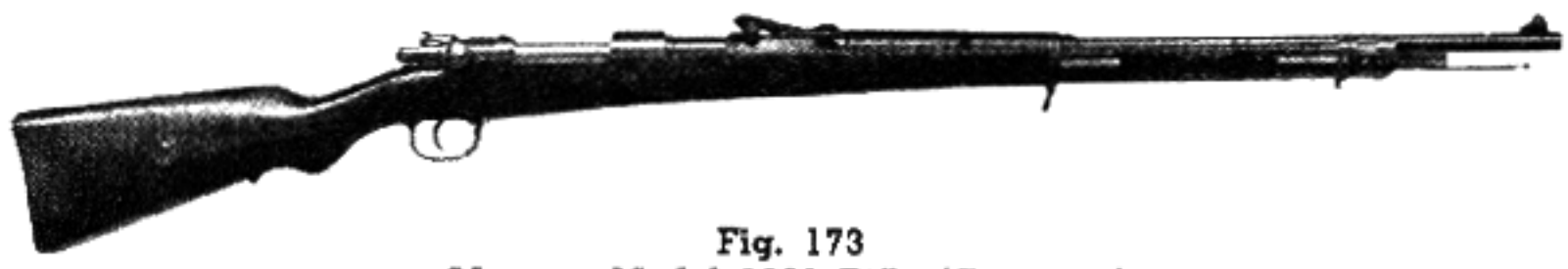

Fig. 173
Mauser, Model 1898 Rifle (Germany)

Mannlicher and the Swiss Schmidt-Rubin. The Ross, once the arm of Canada, is now obsolete.

Turning bolt actions may be divided into three classes: Mauser and Mauser types, Mannlichers, and other types. In the last category are the Lee-Enfield, the Lebel, the Nagant, and the Krag-Jorgensen.

Mauser Rifles — The Mauser action is that most generally in use, more than twenty nations being armed with this type of rifle. Figure 173 illustrates a typical Mauser action and has been reproduced from the descriptive handbook of *The Mauser Magazine Rifle (Model 1904)*.

Mauser Rifles	*Model Caliber*	*Caliber Millimeters*	*Size Inches*
Argentine	1891	7.65	0.301
Belgium	1889	7.65	0.301
Bolivia	1891	7.65	0.301
Brazil	1904	7.00	0.276
Chile	1904	7.00	0.276
China	1893	7.00	0.276
Colombia	1891	7.65	0.301
Ecuador	1891	7.65	0.301
Germany	1898	7.90	0.311
Luxembourg	1896	6.50	0.256
Mexico	1902	7.00	0.276
Peru	1891	7.65	0.301
Portugal	1904	6.50	0.256
Persia	Various old Models		
Spain	1896	7.00	0.276
Sweden	1906	6.50	0.256
Turkey	1905 and other Models	7.65	
Uruguay	1895	7.00	0.276
Yugoslavia	1899	7.00	0.276
Mauser Type Rifles			
Italy	1891 Adopted	6.50	0.256
Japan	Yen 38th Model	6.50	0.256
United States	1903 Adopted	7.62	0.300

The Mauser bolt is of strong and simple construction, in one piece, without a separate movable head. The locking lugs are opposite one another at the front end, *a,a,* illustrated in Figure 173 on the German military bolt (Model 1898); and on the Model 1904 bolt is an extra lug, *a1,* engaging in a recess in the cylindrical part at the rear end of the body. This acts as an additional safeguard in case the front lugs should break. The lever or handle is straight and stands out at right angles from the rear end of the right side of the bolt. The end is formed to a round knob.

At the back end of the bolt is cut a cam-shaped recess *d* which receives the stud of the cocking piece and on turning up the bolt lever slightly withdraws the striker. On the opposite side is a small notch *d2* for the tooth of the safety bolt. The small rib *a2* is special to the German and Model 1904 rifles. It acts as a guide in withdrawing the bolt. When the bolt is closed it lies underneath and supports the extractor. The face of the bolt is recessed to take the base of the rimless cartridge.

The striker or firing pin has a short point and collar *e* against which the main spring bears. The rear end has three interrupted grooves for connection with the cocking piece. The rear portion of the pin is flattened on two opposite sides to prevent it from turning in the bolt plug. The Model 1889 (Belgian) rifle has a striker differing somewhat from later designs. The rear end is threaded, and a rib formed on the pin takes the place of the flats in preventing the striker from turning. The main spring is of 0.06 inch diameter coiled wire with 29 to 31 coils in the different models. Uncompressed it is about 5 inches long.

The cocking piece *d* is provided with interrupted lugs, so that it can be connected to the striker pin by giving it a quarter-turn. An incorrect connection of these parts is impossible, as the rear groove of the striker and the corresponding bearing in the cocking piece are broader than the two front ones. In the Model 1889 a female thread takes the place of an interrupted lug; on the under side of the cocking piece is a projection *f* which travels in a groove cut for it in the tang of the body. This projection engages with the sear nose when the bolt is pushed forward, so that the bolt travels forward while the striker remains stationary, thus compressing the spring fully for firing. The front top surface of the stud *g* is chamfered to correspond with the sloping surface *d* at the end of the bolt. On turning up the bolt the cam surface *d* forces back the stud *g*, gives a preliminary compression to the spring, and withdraws the point of the striker from the fired cap.

The bolt plug *e* screws loosely into the rear end of the bolt by means of a buttress (reinforce) thread, and closes the opening through which the striker is inserted in assembling. It serves as a seat for the main spring. It takes no part in the turning movement of the bolt, the cocking stud *f* working in the slot *f1*. Peculiar to the German Model and also the Model 1904 is the strengthening of the front part of the bolt plug in semicircular shape. This flange acts also as a shield to protect the user against accidental back-blast. In the German and Model 1904 rifles also there is on the left side of the plug a pin catch *e* which, in a certain position, engages with the bolt and keeps bolt plug and bolt securely locked against accidental unscrewing during the opening and closing movements. In other models the front of the stud *g* on the cocking piece rests in a small slot on the rear of the bolt and prevents the bolt plug from turning when the safety bolt is not holding back the cocking piece. The top of the bolt is drilled with a cylindrical hole for the

bolt of the safety catch *f*, which is shown in position on the assembled firing pin in *G* and *G1*.

The safety bolt consists of a thumbpiece and a spindle which works in the hole in the bolt plug. When the bolt is closed and the thumbpiece is turned vertically, as shown in the illustration, the flange *h* on the safety bolt is brought in front of the top of the cocking piece and forces it back slightly, withdrawing the stud *f* from contact with the sear. On turning the thumbpiece over to the right the cocking piece is still locked as above, but at the end of the stem, where it is not cut away, enters into the slot *d2* on the end of the bolt and locks the bolt and bottom plug together, preventing the former from being revolved. The safety bolt is retained in the two safety positions by the top of the cocking piece bearing on shallow depressions on the flange of the safety bolt. In the Model 1889 (Belgian) the safety bolt is retained in position by a small pin fitted in the under side of the thumbpiece, actuated by a spiral spring and bearing in a groove cut across the top of the bolt plug. This practise is also followed in the Springfield bolt.

The extractor is a strong, broad, long-machined spring *H* terminating in a claw, the front of which is chamfered to allow it to ride over the base of the cartridge when the hook engages into the groove at the base of the cartridge and holds it rigidly against the bolt head. The extractor is provided with an undercut groove which engages on the dovetail projection on the spring band *j*, which revolves in a groove on the bolt. A projection *k* works in a groove at the bolt head, and through this medium the pull of the bolt is transmitted to the extractor. The right-hand lug lies under the extractor in a recess when the bolt is drawn back. In the Model 1889 the extractor is a short spring let into the side of the bolt head between the two locking lugs. It revolves with the bolt, which is an objectionable feature, owing to the fact that the rear end of the barrel has to be weakened by being cut away to afford clearance for the end of the extractor, and also on account of the friction introduced between the extractor and the base of the fired cartridge.

The receiver or action is screwed to the breech end of the barrel. On either side of the bolt way is a channel cut, in which slide the bolt lugs and the extractor. The groove on the right side of the receiver is partly cut away to allow the cartridge to be ejected to the right. At the front end of the action, connected with the grooves, are the recesses for the locking lugs. The rear part of the action, through which the bolt moves, forms a complete cylinder, prolonged behind into a tang which is recessed for the cocking stud to move over it. In front of the cylindrical portion are vertical grooves to hold the cartridge clip in loading. The tang is drilled and threaded for the rear guard screw, which helps to hold the trigger guard, stock, and receiver together. In the tang is an opening through which projects the sear. In some early models another slot is cut in the action, just behind the magazine way, for a projection on the front end of the sear; this engages in a slot in the rear of the underside of the bolt when the trigger is pressed. The object is to prevent the accidental discharge of the arm when the bolt is not fully in the firing position. In the Model 1889 and also in the Model 1904 a cross groove is cut, just behind the magazine way, for the additional safety lug on the bolt. In the Spanish Model the left side of the action is cut away to give clearance for the thumb in pushing the cartridges out of the clip or charger into the magazine. Some Turkish Models are fitted with a cut-off similar to that of the Lee Enfield, Mark III. It should be noted that during the World War the Turkish army was provided with Mausers of different Models from the standard Model 1890 to 1903.

The bottom of the action body is cut away for the magazine. The Model 1889 and later models have the magazine and trigger guard in one piece and secured to the stock and receiver body by means of screws. These screws are clearly shown in section *j*, which figures the whole bolt mechanism. The five cartridges lie in two columns and are pressed up against the overhanging edges of the magazine by the pressure of a flat ribbon spring secured to the bottom magazine floor plate and the magazine follower. The follower is provided with a raised rib near its left side, which raises the column of cartridges resting on it to the level of the other column and enables the cartridges in both columns in turn to be caught by the advancing bolt and fed into the chamber. The bottom floor plate is held in position by a small stud to the rear of the magazine opening. The stud can be depressed by the point of a bullet, then the floor plate can slide backwards and be taken out together with the spring and follower.

As a war measure the German rifle was provided with a deep curved box magazine to hold twenty cartridges. It could be attached in place of the bottom floor plate of the standard magazine. It was provided with a simple cut-off in shape of a pin which could be inserted from side to side over the cartridge column. In the Model 1889 (Belgian) the magazine is a detachable box of sheet metal, holding five cartridges in single column. The follower is pressed upwards by an arrangement of levers and flat springs.

All Mauser rifles are clip loaders. The chargers

or clips consist of strips of thin sheet-steel with the edges turned inward and reinforced to engage in the cannelure of the cartridge head. The cartridges are held with sufficient firmness in the clip by a spring of ribbon steel, secured by two small tangs which fall into depressions in the clip body. Two small end tangs are turned up, holding the cartridges firmly in the clip body. The cartridges are swept into the magazine by one motion of the thumb, the clip being thrown out by the first forward motion of the bolt.

The trigger mechanism is on the "double pull" system. The sear *k1* projects into the groove cut in the tang and is part of a bar *m* pivoted near the front end of the body. It is actuated by a spiral spring *1* let into it, one end of which bears against the body. The bar portion of the sear has a vertical slot cut in it, in which the trigger *n* is pivoted. On pressing the trigger the forward of the two projections on the upper surface of the arm presses against the body and the sear is depressed, a sliding movement being felt. The leverage is then transferred to the rearmost projection, a slight check is felt, and on further pressing the trigger the sear parts suddenly from the cocking-piece stud and the striker flies forward to fire the cartridge. There is no half-cock, nor can the striker be placed at full-cock without opening and reclosing the bolt.

An arrangement is provided for stopping the backward travel of the bolt to prevent its being accidentally withdrawn or jerked out. This consists of a lever hinged on the left side of the action. On it is a heel which projects through a slot, into the groove for the left lug of the bolt. The lever is pivoted on a pin and is kept pressed against the body by a small flat spring let into it. The bolt is stopped in its backward travel by the left lug coming in contact with the heel. The retaining-bolt can be swung away from the body so that the bolt can be withdrawn when necessary for cleaning, inspection, etc.

The ejector is pivoted in the same pin as the retaining bolt and forms part of it. It is a triangular-shaped flat piece of steel actuated by a spring inside the retaining-bolt lever. A slot is cut for it in the left locking lug and in the face of the bolt head, so that when the bolt is drawn back the ejector springs into this slot. The base of the cartridge then strikes against the ejector, but as the extractor continues to draw back the right side of the cartridge the latter is swung around and thrown out of the action to the right. There are some small differences in retaining bolts and ejectors—differences of form and not of principle.

Springfield — The United States magazine rifle Model 1903 has an action of Mauser type, but differing from those previously described. A descrip-

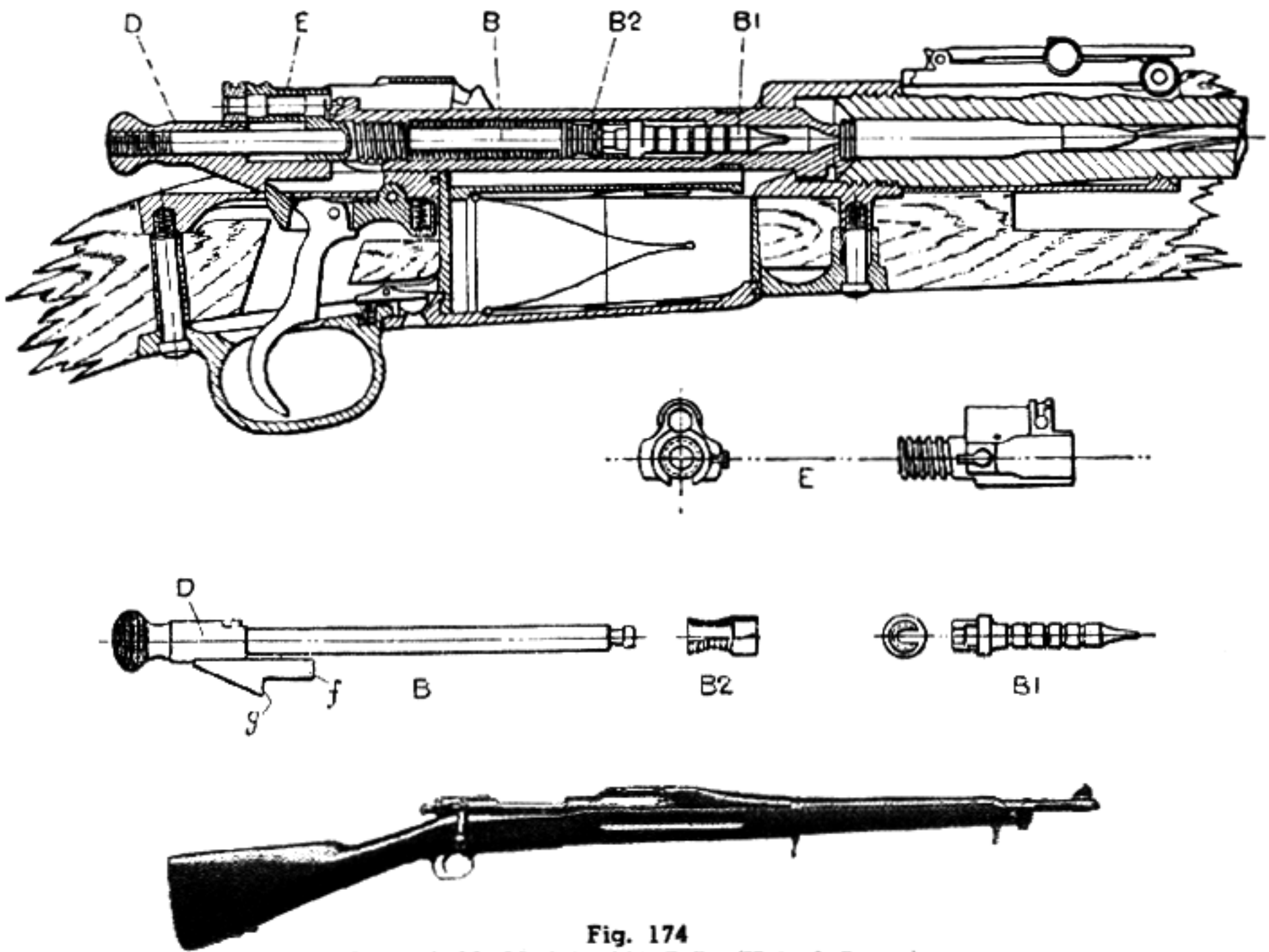

Fig. 174
Springfield, Model 1903 Rifle (United States)

tion is hardly required for the reason that this is our national arm. Those who may want a full description may send to the Government Printing Office and ask for book No. 1923, Description and rules for the management of the "United States Rifle" caliber 30 Model 1903. Figure 174 illustrates the United States Springfield Model 1903 rifle in comparison to other military arms.

Mannlicher-Carcano — The Italian Mannlicher-Carcano, Model 1891, Figure 175, has an action of Mauser type adapted by Mr. Carcano of the Turin Small Arms Factory. The Mannlicher clip system of loading, similar to that employed in the Dutch and Roumanian rifles, is employed to charge the magazine. The action differs from the typical Mauser in the following particular: The bolt lever, which is not at the extreme end of the bolt, projects at right angles about one-third of the length of the bolt from the rear. The rear of the action does not form a complete cylinder, but is cut away at the top to allow the bolt lever to pass. Under the front end of the body is a transverse rib, following Mannlicher practise, which fits into a groove in the stock and serves to transfer the shock of recoil to the stock. The bolt plug *e* fits into the rear end of the bolt, and a groove *a* inside the rear end of the latter admits the stud *c* entering the slot *b*. The main spring bears on the front of the plug and the striker passes through the hole in the center of it.

The bolt plug acts as a safety arrangment in the following manner: When the plug is in its normal position the stud *c* is resting in the recess at the extreme end of the slot *b*, and when the cocking piece and striker are held back by the sear the main spring tends to drive them forward. If now the bolt plug is pressed forward and turned round, by means of the fingerpiece, so that the stud *c* rests in the recess *d*, the back of the bolt plug bears against the front of the cocking piece and the latter has no tendency to fly forward. If the trigger is now pulled, cocking piece and striker remain at rest. If the stud *c* is turned into the end

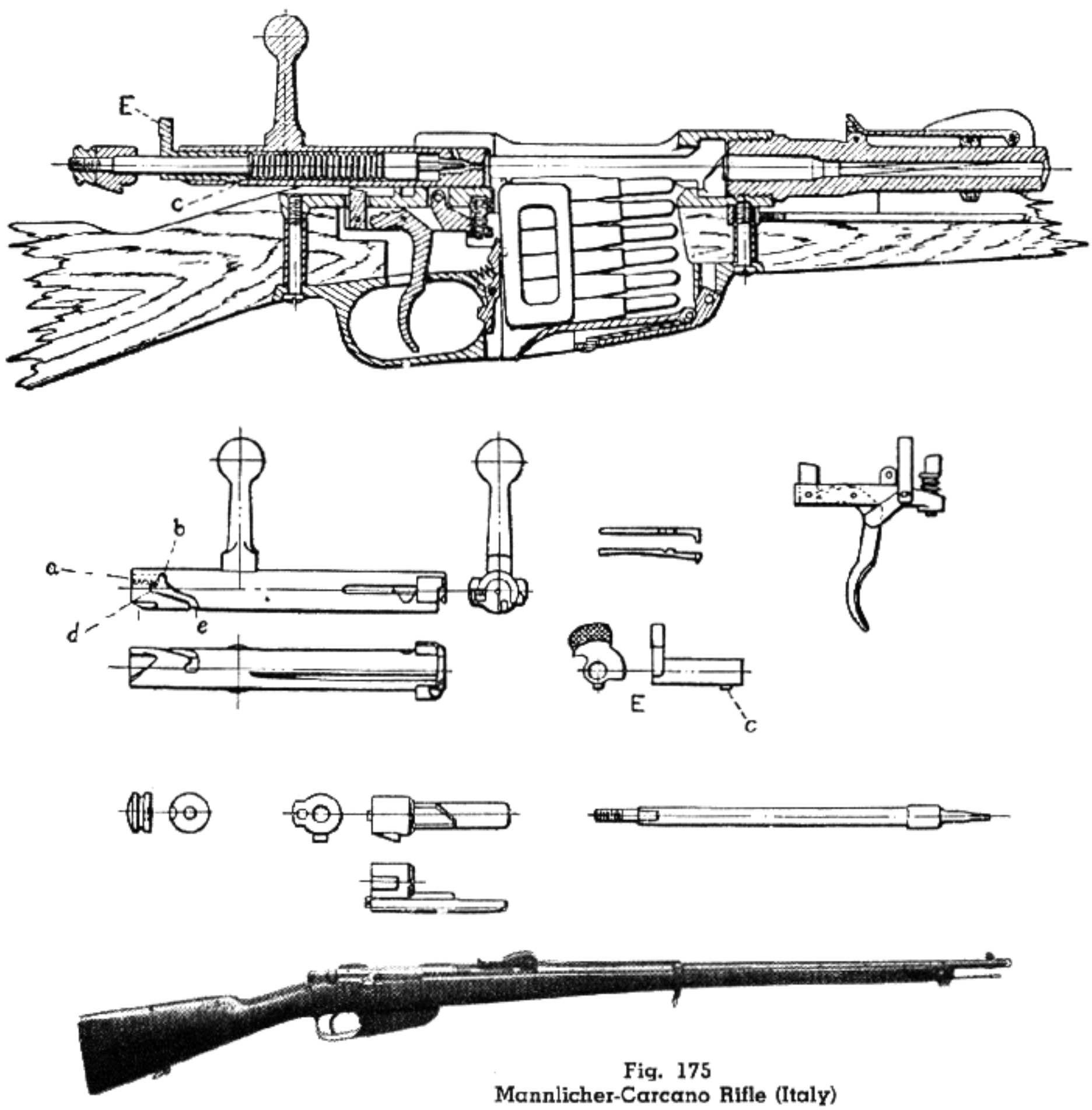

Fig. 175
Mannlicher-Carcano Rifle (Italy)

of the slot *b* and drawn out through the groove *a*, the bolt plug, cocking piece, striker and main spring are withdrawn from the bolt.

The extractor is a medium-length, narrow spring inserted into its groove from the front of the bolt. The extractor revolves with the bolt, which is an objectionable feature. The extractor lies under the right-hand lug, and has a shoulder on it which springs up under the lug and takes the pull during extraction. At the shoulder is a small groove to take the end of a screw-driver or punch in depressing the shoulder when removing the extractor from its groove.

The retaining bolt is on the right-hand side of the action. Its upper end passes through a slot in the right-hand groove for the bolt plug. It is slotted to connect with an arm on the right side of the trigger. To withdraw the bolt the trigger must be pulled when the retaining bolt is lowered and the bolt can pass over it. The magazine holds six cartridges, and is similar to that of the Dutch Mannlicher.

The ejector rests in a bearing in the front of the sear and is pressed upwards by the sear spring. Its top end passes through a slot in the body, enters a groove on the underside of the bolt when the bolt is withdrawn, and strikes against the left-hand lower part of the base of the cartridge, throwing it out to the right.

Japanese — The Japanese Yen 38th Model rifle is of Mauser pattern and differs from typical Mausers in the following manner: The striker and cocking piece are made in one. The striker is of large diameter for two-thirds of its length, and is bored to a depth of 4.2 inches from the rear to take the main spring. A cocking toe is formed on its rear end. In the interior at the rear end are cut two longitudinal guide grooves, disposed at right angles to one another, in which a stud on the locking bolt moves.

On the rear of the bolt the usual chamfered recesses are cut, in order to withdraw the striker from the fired primer on the raising of the lever of the bolt. As there is no bolt plug, these recesses are cut somewhat deeper than in typical Mauser practise.

The locking bolt is in the form of a cylindrical cap on the end of the bolt, with a stem which fits into the striker and bears against the main spring. It can be placed in the safety position only when the action is cocked. To lock the action the locking bolt is pressed forward and then turned to the right, the movement to the right being limited by the travel of a stud, on the under surface of the locking bolt, in a groove in the body. By pressing forward the locking bolt the main spring is compressed, and by turning the locking bolt a small stud on the rear part of the stem, which had engaged with a guide ledge on the forward end of the locking bolt, engages with a stud on the bolt, which is thereby locked. The locking bolt is held by the weight of the main spring with a stud on the rim of the locking bolt forced into a recess in the groove at the rear of the body. When the locking bolt is disengaged the weight of the main spring is transferred from the point of the stem of the locking bolt to a circumferential rib on the bolt, which engages with a rib on the inside of the cylinder of the locking bolt.

The knob of the bolt lever is egg-shaped.

A bolt cover is provided. It is semicircular in cross-section and is retained in guide grooves on either side the body, in which it moves. It encases the whole of the top of the body when the breech is closed. The bolt lever passes through a hole in the cover and draws the latter backwards and forwards.

The magazine and trigger guard are not in one piece. The box is made of sheet steel and holds five cartridges in two columns. In other respects it is similar to typical Mauser magazines.

Main spring Compression — In all Mauser actions, on the first motion of the lever to open the action the cocking piece and bolt plug are prevented from turning with the bolt, owing to the cocking stud projecting into the groove cut in the tang of the body. The tooth on the cocking stud is forced back by the cam-shaped recess on the rear of the bolt, slightly withdrawing the striker and partially compressing the main spring.

In the Belgian, Spanish, Turkish, and Japanese models, on locking the bolt when there is about an inch of travel before final closing, the cocking stud engages with the sear, so that the cocking piece and striker are held back while the bolt and bolt plug are pushed forward, thus completing the compression of the main spring.

In the 1904 and German Models of the Mauser, and in the Springfield Model 1903 and Italian actions, the cocking stud does not engage with the sear until the bottom of the bolt lever meets the cylindrical portion of the body. The main spring takes its final compression when the bolt lever is turned down. This compression is materially assisted and made easy by the lugs on the bolt traveling along the cam-shaped entrances to their recesses and being thereby forced forward.

Primary Extraction — In all Mauser actions primary extraction of the fired case is attained by the

leverage exercised by the lower end of the lever, at the point of junction with the bolt, moving against an inclined plane cut on the rear face of the cylindrical part of the body. In the Springfield action the inclined plane is a spur or continuation of the lever, formed round the bolt, which works against a cam surface on the rear of the body.

In the Italian action the rear end of the body is not cylindrical but is slotted to allow the bolt lever to pass. The necessary leverage to move the fired case is given by the left-hand lug on the bolt working against a cam surface at the front end of the left-hand groove in the body.

Mannlicher Rifles — Turning-bolt action—Figure 176.

	Model	*mm.*	*inch*
Greece	1903	6.5	.256
Holland	1895	6.5	.256
Roumania	1893	6.5	.256

In the Mannlicher bolt the locking lugs are close to the head on opposite sides of the bolt; but disposed a little further back than those of the Mauser to allow of the fitting of a separate bolt head, which does not rotate with the bolt when it is actuated. The advantages of a separate bolt head are many, and considerably outweigh the advantages claimed for the solid bolt head, the most important of which are strength and the impossibility of the bolt head being lost. In order to get the main spring and striker into the bolt, the front or rear end must have an opening as large in diameter as that of the main spring. These openings are closed either by a bolt head or a bolt plug. A bolt head is lighter and less complicated than a bolt plug, and the extractor can be attached to it and can thus be prevented from rotating with the bolt, and at the same time be of light and simple construction. The disadvantage of having the extractor rotate with the bolt has already been dealt with. Another advantage of the separate bolt head is that if the end of the bolt be damaged by defective cartridges or

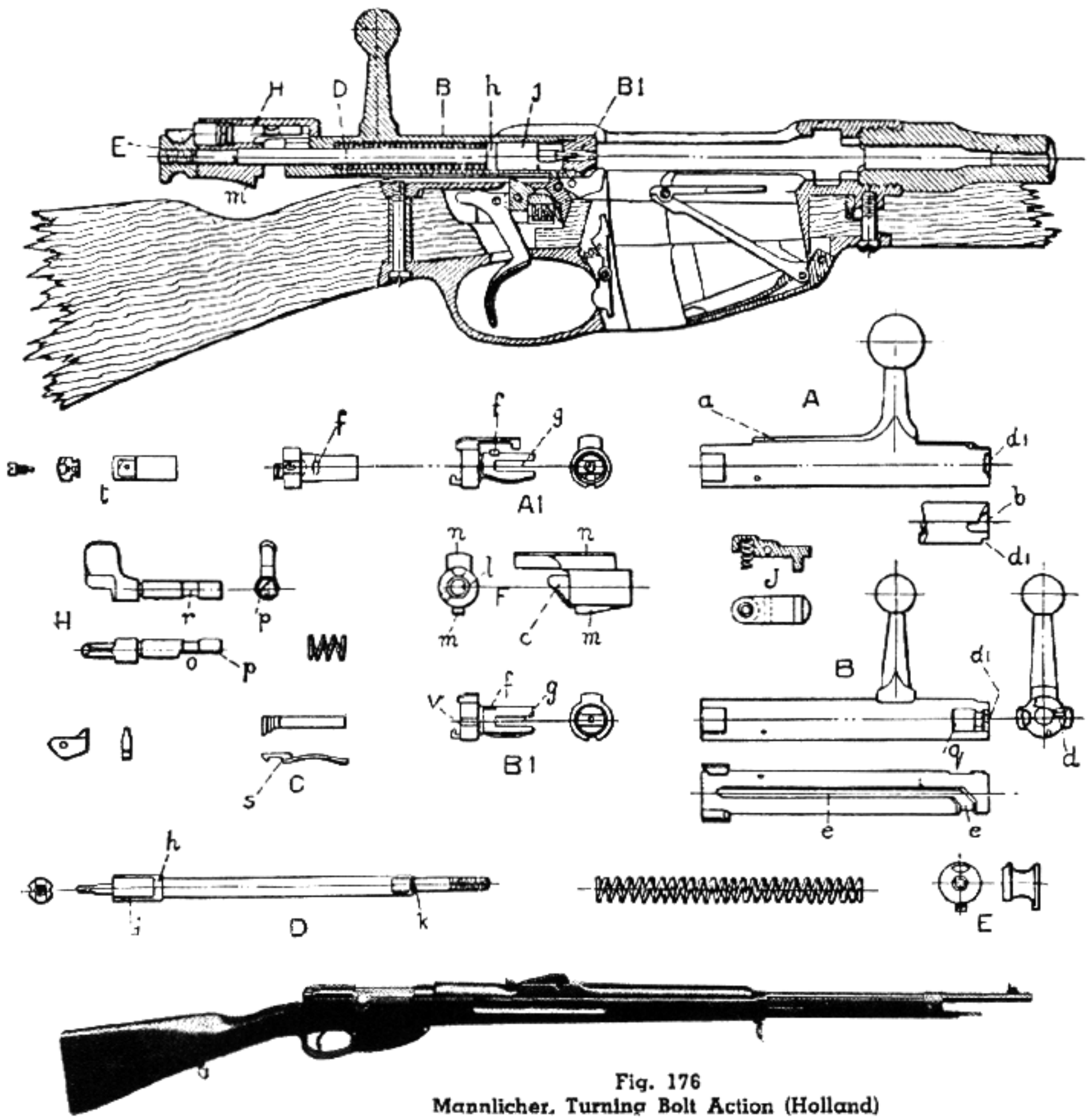

Fig. 176
Mannlicher, Turning Bolt Action (Holland)

in any other way, a repair can be more cheaply effected by exchanging the bolt head than by renewing the entire bolt cylinder.

The disadvantage of a separate bolt head is that the lugs have to be located further back on the bolt to allow for the head and are thus further removed from the barrel and cartridge, and the action body has to be lengthened to allow of proper working of the action. Also, if the bolt head becomes loose, through wear, the shooting of the rifle is impaired.

The Mannlicher bolt is simple in construction and, like the Mauser, can be stripped and assembled without the use of tools. The position of the two locking lugs has already been indicated, and reference to figures *A* and *B*, Figure 176, will obviate further description. *A* represents the Dutch and *B* the Roumanian bolt. The Greek bolt resembles the Roumanian closely, except for differences that will be detailed as they are come to. The Dutch bolt has a strengthening rib *a* in line with the lever. The lever projects at right angles to the bolt about one-third of the length of the bolt from the rear, and terminates in a knob. The knob of the Greek bolt is hollowed out for lightness. It is larger than in either of the other patterns.

There is a cam recess *b* at the end of the bolt, similar to that described in the Mauser bolts and serving a similar purpose. The cocking-piece stud *c* enters it on firing, and the leverage given by the inclined plane on turning up the lever in the first motion of reloading forces back the cocking piece, slightly withdraws the striker, and gives the first compression of the main spring. At the end of its travel along the inclined plane the tooth of the cocking piece rests in a shallow groove *d* in which it is held by the weight of the main spring and prevented from turning when the bolt is withdrawn. On the Greek bolt there is also a projecting cocking-piece stop stud in front of the cam, which prevents the cocking piece being overturned to the right when in the cocked position for insertion in the rifle.

As the striker and main spring are inserted from the front there is no bolt stop. A segmental recess *d-1* on the rear end of the bolt receives the end of the safety bolt. It is larger in the Roumanian and Greek than in the Dutch models. A small gas escape is provided behind the left-hand lug. On the Roumanian and Greek bolts there is a groove *e* to provide a clearance for the ejector fitted to those types. There is a hole in the rear of the bolt through which the end of the striker works.

The bolt heads *A-1* and *B-1*, for the above bolts, are provided with tenons which fit into the front ends of the bolts. The studs *f* work in circular grooves on the inside of the bolts. The bolt heads can only be withdrawn when the studs are turned, so that there are opposite clearances provided for them. The tenons are slotted at *g* for the flats on the front of the strikers. The extractor *C* fits into a groove on the side of the bolt head.

The main spring consists of 26 coils of .056 wire. The rear end bears against a seating in the bolt cylinder.

The striker, *D*, passes through the main spring, bolt, and cocking piece, and screws into the nut, *E*. In the Greek pattern the attachment is by interrupted lugs. The front end of the main spring bears against the collar *h*. The flat *j* works in the slot *g* in the bolt head and prevents the cocking piece from turning when the stud is clear of the groove in the tang, the bolt being drawn to the rear.

The cocking piece *F* fits on to the striker and butts up against the shoulder *k* on it. It is prevented from turning by the end of a screw *l* bearing on the flat on the striker. The stud *m* travels in the groove in the tang of the body and engages with the bent of the sear. The rib *n* is bored out from the rear for the stem of the safety bolt.

In the Greek Model the under side of the top rib of the cocking piece is grooved on the right side to clear the stop-stud on the bolt, and the striker hold is bored with interrupted rings for attachment to the striker.

The stem of the safety bolt *H* fits in its seating in the rib of the cocking piece. It is operated by means of a fingerpiece. A small spiral spring fits over the stem and keeps the safety bolt pressed to the rear. When the striker is cocked, and the fingerpiece is pointing to the left, the stem of the safety bolt is able to move forward over the bolt, as the half that is cut away, *o*, is underneath, next to the bolt. When the finger-piece is turned over to the right, the small cam, *p*, on the end of the safety bolt, engages the front of the recess *d-l* in the bolt and forces safety bolt and cocking piece back, disengaging the stud on the latter from the sear bent. The safety bolt and cocking piece cannot now move forward when the trigger is pressed. In the Roumanian and Greek pattern the finger-piece can be turned over to the right, and the bolt locked, when the cocking piece is in the fired position. The end of the stem of the safety bolt then engages in the recess *q*, a clearance, *r*, being provided in the stem for the division between the recesses. In the Dutch Model the bolt cannot be locked in the fired position.

The extractor *C* fits in a groove in the bolt head. The shoulder *s* fits against a corresponding shoulder in the bolt head, and takes the strain during extraction. The front terminates in the usual claw.

In the Dutch and Greek Models an undercut stud on the ejector *t* slides backwards and forwards in an undercut groove in the bolt head, its travel being limited by a screw working in a groove. The back of the ejector strikes the retaining bolt when the bolt and bolt head are drawn to the rear. The ejector slides forward, and the front of the stud strikes the left rear of the cartridge, ejecting it to the right. The front edge of the stud is beveled off to enable the base of the top cartridge as it rises out of the magazine to push back the ejector.

In the Roumanian action the ejector is pivoted in a slot on the under side of the body immediately behind the magazine way. It is similar in shape to the ejectors already described for typical Mauser actions. The tail of the ejector works in the groove *e* in the bolt. When the bolt is drawn back so that the tail is at the front end of the groove, it is depressed, and the small tooth on the front being raised into the boltway and into the slot *v* in the bolt head, strikes the base of the cartridge and tilts it out of the rifle, to the right. The bolt head is prevented from turning by the ejector, or, in the Roumanian Model, by a stud which takes its place, working in the left-hand groove of the body.

The retaining bolt *J* is pivoted on a vertical pin on the left side of the body near its rear end. A tooth projects into the left groove in the body and arrests the backward movement of the left lug. In the Dutch rifle it is the ejector that strikes the tooth. A small spiral spring keeps the tooth up to its work. To withdraw the bolt, the thumb-piece on the rear end of the retaining bolt is pressed inwards against the body, when the tooth is removed from the boltway and the bolt is free to move backwards out of the body.

The receiver screws on to the barrel in the usual manner. On either side of the boltway is a longitudinal groove for the lugs on either side of the front end of the bolt. At the front end of these grooves are cam-shaped grooves which lead to recesses above and below the boltway. On firing, the lugs resist the backward pressure of the cartridge case by taking a bearing against the rear face of the recesses. The groove on the right is partly cut away to facilitate loading the magazine and to permit of ejection of the fired cartridge. Behind the recesses the bottom of the body is cut away for the magazine. Behind the magazine way the body does not form a complete cylinder, but is cut away at the top to permit of the passage of the bolt lever. The rear part of the body forms a tang in which a groove is cut for the stud of the cocking piece. Near the front end of this groove is an opening through which the bent of the sear projects. At the front end of the magazine way is a projection, the rear face of which is grooved to form a guide for the bullets of the cartridges as they rise in the magazine; it also serves to keep the trigger guard at the correct distance from the body. Underneath the front part of the body is a boss which fits in a recess in the stock and transfers the shock of recoil from the barrel and body to the stock. It also takes the front guard screw. In the Roumanian rifle there is a narrow slot just in rear of the magazine way for the ejector to work in.

In the Dutch and Roumanian rifles the magazine works on the clip system. Each clip, which is of sheet steel, with deep sides, contains five cartridges. The clip is placed in the magazine together with the cartridges, which are forced up out of the clip by the action of the magazine spring against a lever termed an "elevator." When all the cartridges have been pushed up out of the clip the clip falls out through the bottom of the magazine, in which a hole is left for the purpose. The advantages of this system are that the loading is easier than when the cartridges have to be swept out of a charger by the action of the thumb, and the clips and cartridges can be easily removed from the magazine when necessary. The disadvantages are that the clips are more bulky and heavier than charges and are more liable to be bent and distorted. The magazine must be made deeper than in the best designs of clip-loading systems, to hold the same number of cartridges, as they lie in the magazine box in single instead of in double column. With a charger extra pressure can be applied by the thumb to overcome extra friction caused by rust or dirt between the charger and the cartridges; but in the case of the clip the strength of the magazine spring cannot be temporarily increased to overcome any abnormal resistance. With charger-loaded magazines, a partially emptied magazine can be filled up with separate cartridges, if desired. With clip-loading the magazine cannot be charged until the empty clip has fallen out of the bottom of the box. In addition, the large hole in the bottom of the box is undesirable in that it is liable to let dirt into the magazine, particularly when firing over a parapet or when firing prone.

In the Dutch and Roumanian rifle the lower part of the box is formed in one piece with the trigger guard. In the Roumanian pattern a small platform is pivoted on to the end of the elevator and actuated by a spiral spring. In the Dutch pattern there is no platform, the end of the elevator being rounded off to work against the cartridges, which are not so well supported as by the platform.

The Schœnauer magazine of the Greek rifle is charger-loaded and is designed on an ingenious rotary system, which, however, presents no ad-

vantages over the more simple charger-loaded box magazines with rising platform and is more liable to become clogged with dirt that cannot easily be cleared from the mechanism.

A rectangular box forming the bottom part of the magazine is fitted into the bottom of the body and held in position by a bottom-fixing plate, pivoted in the center at the bottom of the box; each end of this plate, when revolved, enters radial locking grooves, cut in the front and rear of the downward extensions of the bottom of the body, which forms the top part of the magazine. The magazine bottom-fixing plate is retained in position by a spring which enters a recess in the plate.

In the rectangular box, forming the bottom part of the magazine, a rotary platform is fitted. The platform is bored to receive front and rear axis studs attached to a spiral spring. The axis studs are grooved to receive, and prevented from turning by, two retaining pins, fitted in the axis hole of the platform. The platform is provided externally with five grooves to receive the cartridges.

As the cartridges are charged, the magazine platform is rotated and the spiral spring coiled, its tension being thereby increased (a certain amount of tension is on the spring when assembled with studs to the platform). By the expansion of the spring the platform is rotated, and the cartridges forced up to a cartridge stop projecting into the boltway. The thumbpiece of the cartridge stop projects through a slot cut in the top on the right side of the body, where it is pivoted. When charging the magazine, the cartridge stop is depressed by the cartridges. If it is desired to remove the cartridges from the magazine, the cartridge stop is depressed by pressure on the thumbpiece, when the cartridges are ejected out of the magazine.

The trigger mechanism of all Mannlicher rifles is on the "double-pull" system. Its construction can be clearly seen from Figure 176.

The main spring is given an initial compression and the striker withdrawn from the fired primer by the first motion of turning up the bolt, when the cocking piece is forced back by the action of the cam-shaped recess on the rear of the body cylinder working against a tooth on the cocking piece, which enters a groove at the end of the recess on the completion of its travel. Final compression is given by turning down the lever when the bolt has been returned. During this turning movement the cocking-piece stud engages on the sear bent, and the lugs on the bolt travel along the cam-shaped grooves leading from the grooves in the boltway to their seatings when in the cocked position. The reverse action, when unlocking the bolt, gives primary extraction of the cartridge.

Other Turning-Bolt Actions — The other turning-bolt actions, which do not fall into either of the classes dealt with, are the Lebel (French), the Krag-Jorgensen (Denmark and Norway), the Nagant (Russia), and the Lee (Great Britain). The Lee action is fully described later. The Lebel, Nagant, and Lee bolts have separate bolt heads. The bolt heads of the Lebel and Nagant carry the locking lugs and rotate with the bolt. This system would appear to have no advantages, except for repair purposes, over that in which there is no separate bolt head, as it is desirable that the bolt, especially the front part, should be as solid and rigid as possible. In the Lee action the bolt head does not rotate with the bolt, but the lugs are disposed at the rear of the bolt cylinder. This is not a desirable arrangement, as, on firing, the greater part of the body and bolt are thrown into a state of tension and compression respectively. This strain, acting on the unsymmetrical central part of the body, causes lateral vibrations, which have to be compensated for by displacing the foresight laterally. The unsymmetrical incidence of the strain also has a disturbing influence on the accuracy of the rifle. The British action has, however, advantages which may compensate for the fact that, mechanically, its design is unsound. There is no deep cylindrical portion in front of the action body, as in the continental forms, in which dirt can accumulate. The form of the action and the shape and disposition of the bolt lever allow of extremely rapid fire. It is possible to deliver roughly directed fire at the rate of sixty rounds a minute, a rate which is often attained and sometimes passed in routine tests on the range of the Small Arms Ammunition Inspection Department. With no other action is it possible to attain anything like this rate of fire. Competition has proved that, with good ammunition, and when adjusted carefully, the British rifle is capable of accuracy which compares favorably with that of any Continental Service weapon.

The Krag-Jorgensen has no separate bolt head, but there is one lug only which engages in a recess below the entrance to the chamber. This unsymmetrical arrangement is objectionable because it must give rise to considerable vibrations in a vertical plane.

Lebel Rifle — Figure 177.

France .....Model 1886.....8 mm..... .315 inch

This was the first small-bore rifle to be adopted by any nation, and with it smokeless powder was first used. A later model of this rifle, introduced in 1907, is similar to the 1886 model, except as regards the magazine.

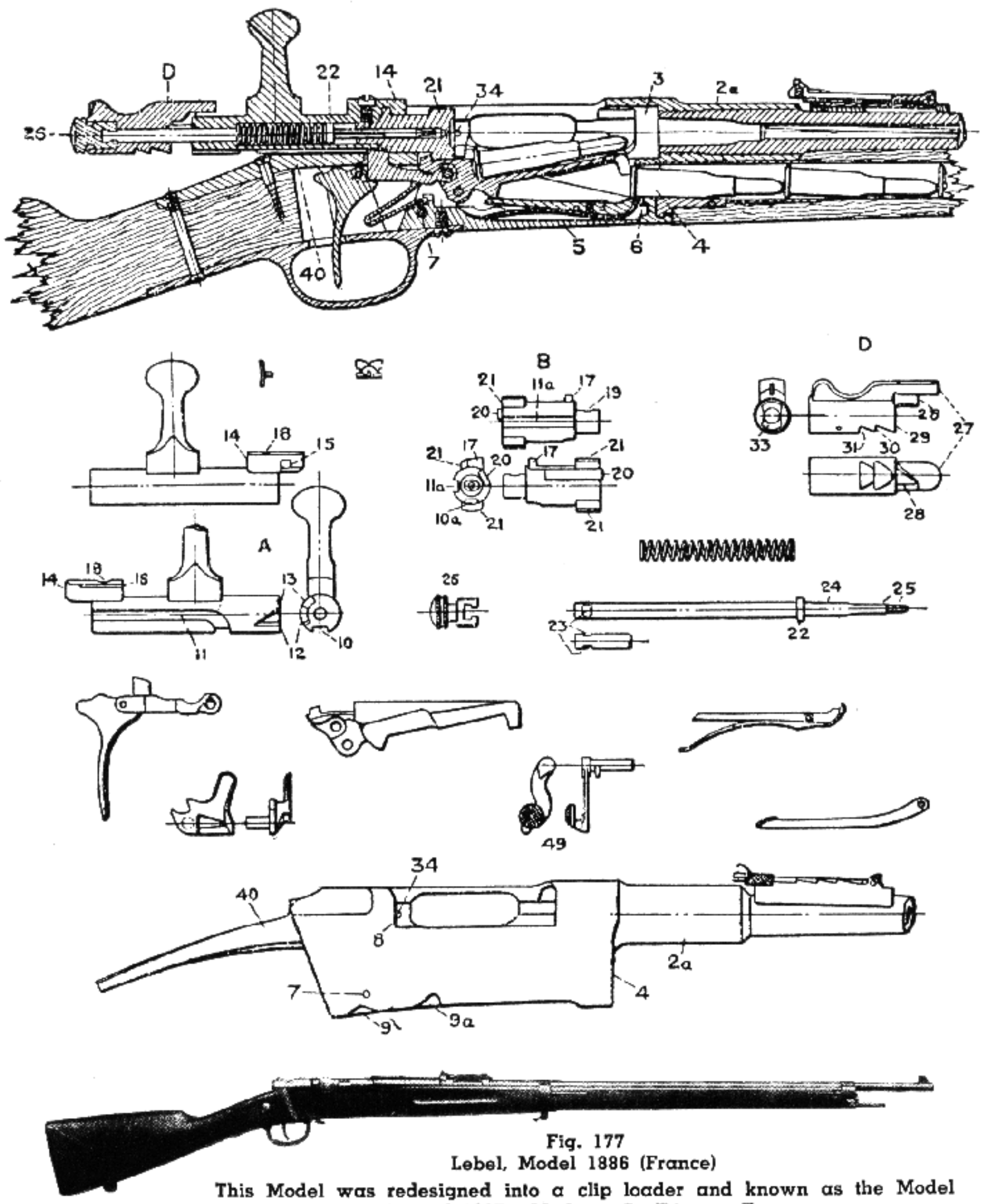

Fig. 177
Lebel, Model 1886 (France)
This Model was redesigned into a clip loader and known as the Model 1892 and 1907. Made at St. Etienne, France

The **bolt** *A* **is** a strong cylinder, bored out from the front for the main spring. It has a straight lever terminating in a knob. On the opposite side to the lever is a groove (*10*) into which the nose of the sear projects. On the left side, with the lever in the raised position, is the groove (*11*) for the ejector (*34*). On the same side is cut, at the rear end of the cylinder, a cam-shaped recess (*12*) for the similarly shaped projecting tooth (*28*) on the cocking piece. When the bolt lever is raised the end of the tooth (*28*) rests in the recess (*13*). The projecting rib (*14*) extends beyond the face of the bolt, and serves to connect the bolt head and bolt by means of the recess (*15*) fitting over the stud (*17*) on the bolt head. A screw passes through the hole (*18*) in the bolt and enters the hole (*19*) in the bolt-head tenon, which in turn enters the main-spring channel of the bolt head; the latter is therefore forced to turn with the bolt. This rib also acts as a guide to the bolt, the small rib (*16*) traveling along the left top edge of the body.

On the left of the bolt head *B* is the ejector groove (*11a*). On the right, the extractor (*20*) fits into an undercut groove, the rear end being splayed out slightly to resist the pull during extration. The two lugs (*21*) enter the recesses (*3*)

in the body on the right and left of the boltway, and prevent the bolt being forced to the rear on firing. The face of the bolt head is cupped out to a depth equal to the thickness of the cartridge rim; the extractor, therefore, will not rise over the rim of the cartridge until the cartridge is almost home in the chamber. The bolt head is bored out for the striker, the hole in rear being oval to receive the part (*24*) on the striker. The groove (*10*) on the bolt for the sear nose is continued for a short distance along the bolt head at (*10a*).

The main spring consists of 19 coils of wire, 0.05 inch thick, set to a length of 3.9 inches.

The striker has a shoulder (*22*) for the main spring to bear against, and two slots (*23*) near the rear end, fit into the T-shaped recess in the striker knob (*26*). The part that enters into the bolt head is thinned down in front of the shoulder at (*24*). The point is further reduced in two steps at (*25*).

The cocking piece *D* has a projection (*27*) in front, working in the opening between the sides of the body. Underneath the projection is a tooth (*28*) which is shaped to fit into the cam recess (*12*) at the back of the bolt cylinder. The bottom front corner (*29*) of the cocking piece is the full-cock bent. The notch (*30*) is a second full-cock bent. The notch (*31*) affords clearance for the bent of the sear, when the cocking piece is forward in the fired position. The top is hollowed out and roughened to form a comb for drawing back, or letting down the striker, but the main spring is too strong for this to be done with safety. The striker passes through the cocking piece, its knob fitting into the recess (*33*) in the rear end of the latter and being locked with a half turn.

The extractor (*20*) is a short flat spring terminating in the usual claw, which projects over the face of the bolt head; it is dovetailed into its groove in the bolt head. The breech end of the barrel is beveled off for a quarter of its circumference to afford clearance for the claw of the extractor.

The ejector is a small pin (*34*) screwed into the body on the left side; it projects into the boltway and works in the slot (*11*) and (*11a*) in the bolt and bolt head.

The body has vertical sides which slope inwards at the top. The body is prolonged in front at (*2a*), and forms a cylindrical reinforce for the barrel. The rear end forms a long tang which is prolonged forwards at (*40*) between the sides of the body. The bolt slides in a longitudinal groove, cut in the upper part of the body, and the lugs (*21*) on the bolt head turn into recesses (*3*) at the front end of the boltway. The entrances to these recesses are rounded off to allow of the bolt coming back during primary extraction. At the front end, below the projection (*2a*), is an opening (*4*) for the magazine tube. The bottom of the body is closed by a plate (*5*), to which are attached the sear and the cartridge elevating mechanism, which are situated below the boltway. The projection (*6*) on the front end of the plate fits into a recess in the body, and a screw passes through the body and through a screw hole (*7*) in the rear end of the plate. The body is cut away on the right side to allow of the cartridge cases being ejected to the right. The rear part of the boltway is open on top to allow for the cartridge cases being ejected to the right. The rear part of of the boltway is open on top to allow of the passage of the rib (*14*), on the bolt, and also of the bolt lever, which turns down in front of the shoulder (*8*). Two recesses, (*9*) and (*9a*), are cut in the bottom of the right side of the body for the handle of the carrier axis-pin lever (*49*).

The trigger mechanism is on the double-pull system and is very similar to that of the Mauser and Mannlicher actions, except that the sear arm is short so that the sear is disposed rather in front of the trigger than behind it, and the spring is V-shaped instead of being spiral. The trigger is little curved and is awkward in shape.

The magazine of the 1886 model is tubular and consists of a longitudinal hole bored in the fore-end, lined towards the rear with a short steel tube. It holds eight cartridges, which are pressed towards the rear by a steel spring consisting of 78 coils of wire .03 inch thick. The spring terminates in a steel plunger which is prevented from coming out of the tube by a small shoulder in the latter. The cartridges are raised to the level of the chamber by a carrier scoop actuated by the bolt striking against a projecting lever. The magazine is loaded by depressing the scoop with the bullet of the cartridge and passing it into the magazine. On the right side of the bottom of the action body a checkered button, connected with the carrier axis pin, projects. When this is pushed to the front the depressor lever is moved so that it cannot be struck by the bolt. The magazine can then be retained full and the rifle used as a single-loader. The magazine of the latter 1907-15 model is of the more usual fixed vertical-box type, holding 5 rounds.

Besides being slow to load, a tubular magazine is objectionable because the balance of the rifle shifts as the column of cartridges is pushed to the rear and the cartridges loaded and fired. The necessary raising platform, also, is complicated and very liable to be jammed by dirt.

On first raising the bolt the main spring is compressed nearly to its full extent by the cocking piece being forced backwards by the cam recess on the

rear of the bolt cylinder. Final compression is given on closing the bolt by the lugs working along the curved entrances to their recesses. Primary extraction is given by the front end of the projection on the bolt being forced back by a curved face on the body.

Krag-Jorgensen Rifle — Figure 178.

Denmark	Model 1889	8 mm	.315 inch
Norway	Model 1894	6.5 mm	.256 inch

The bolt (*1*) is of simple construction with no separate bolt head. A single locking lug (*2*) is situated at the head of the bolt. On the right side, when the bolt is closed, is a solid rib (*3*) which bears against a shoulder in the body, and assists in taking the shock of recoil. The lever, terminating in a knob, is at the rear end of the bolt cylinder, and is set back a little. In the Norwegian model it is turned down, but not to the same degree as in the British rifle. The usual cam-shaped recess is cut in the back of the bolt. A gas-escape hole (*4*) is bored in the right side of the bolt cylinder, close to the lug.

A flange (*5*) runs partly round the rear end of the bolt and serves to retain the bolt plug. The bolt can be stripped without the aid of tools.

The bolt is bored out from the rear for the main spring, which is of wire .053 inch in diameter, with 28 coils set to a length of 4.5 inches.

The striker (*6*) is in two pieces; the point forming the front is secured to it by a sort of knuckle joint. This is the same as in the Springfield model, except that there is no sleeve. The main spring bears against the rear end of the front part of the striker.

The rear portion of the striker screws into the cocking piece (*7*), from which the cocking stud (*8*) projects downwards, traveling in a groove cut for it in the tang of the body. The front of the stud is shaped to fit into the cam recess of the bolt. The stud is provided with a half bent, as well as a full bent, and the cocking piece has a roughened thumbpiece. In the Norwegian action there is no half bent. The cocking piece ends in a knob.

The striker passes through the plug, which fits into the rear portion of the bolt, and against which the main spring bears. The sleeve is bored out for

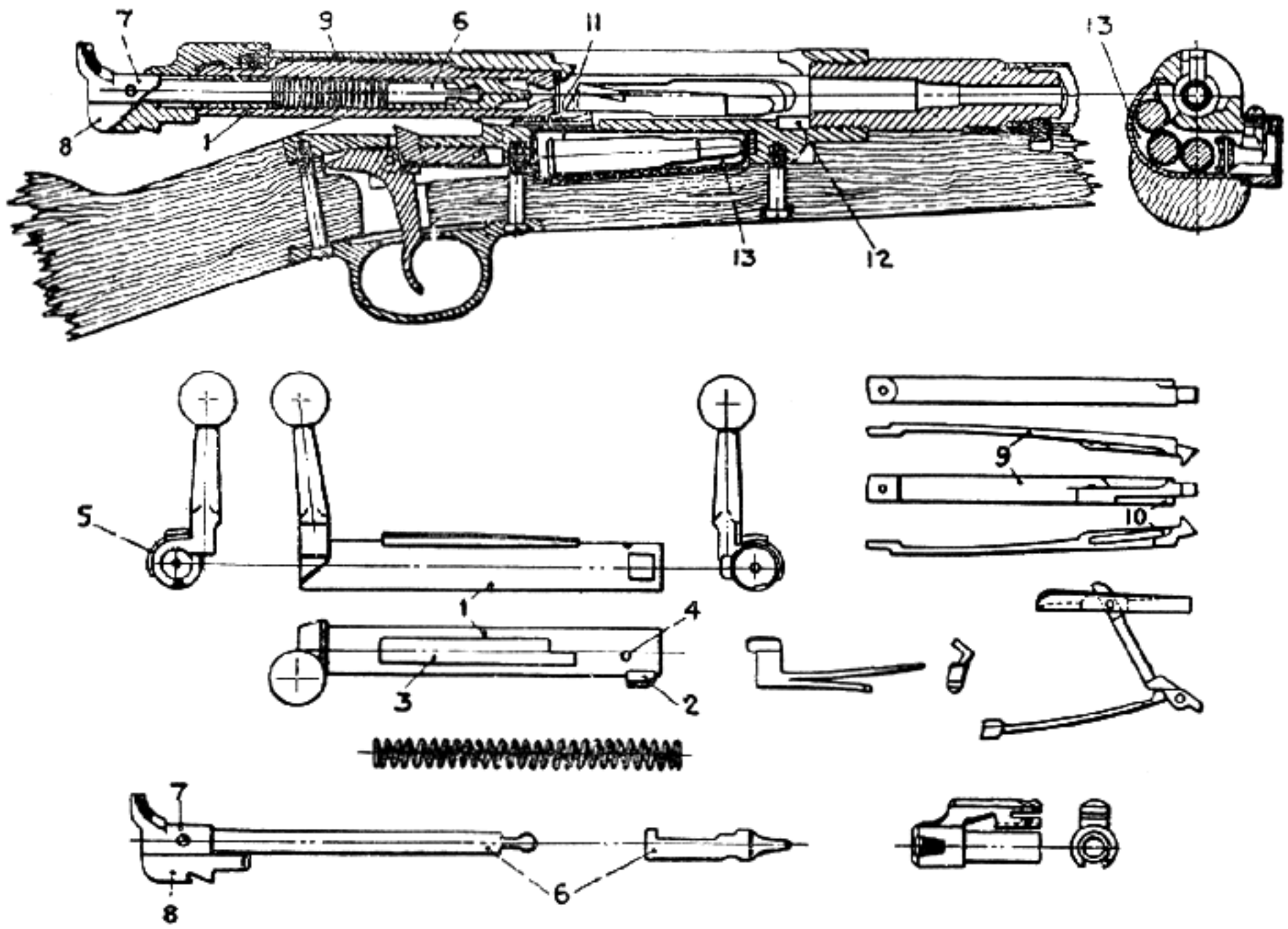

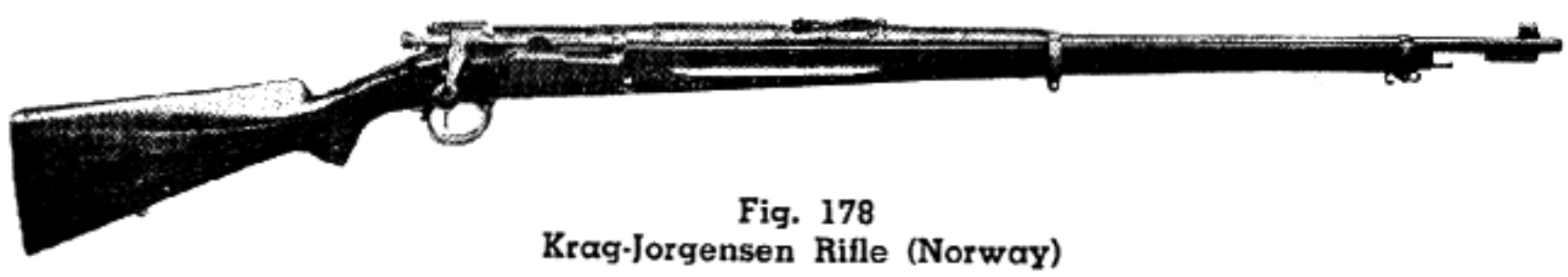

Fig. 178
Krag-Jorgensen Rifle (Norway)

the cocking piece, and has a slot in its under side for the cocking stud to travel in. The top extends over the bolt, traveling in the slot cut in the body cylinder; a groove is cut in this portion of the sleeve, in which a corresponding flange on the rear of the bolt works, and prevents the pressure of the main spring from forcing the sleeve out to the rear.

The extractor (*9*), which is a long flat spring terminating in the usual claw, is pivoted by a screw to the bolt sleeve, and fits over the bolt rib, when the bolt lever is raised. It has a secondary spring (*10*) mortised into it, which fits under a projection in the body and prevents the extractor from rising during primary extraction. The extractor claw projects over the face of the bolt-head recess. When the bolt is closed the end of the extractor fits into a recess in the body, but when the bolt lever is raised the projection on the front of the rib of the bolt bears against a projection on the extractor, guiding the latter while the bolt is being drawn back. A slot in the cylindrical portion of the body assists in performing the last-mentioned function. The extractor of the Norwegian rifle is wider than that of the Danish.

There is no retaining bolt, but the lug on the bolt coming up against the resisting shoulder stops the backward movement of the bolt. To remove the bolt it must be drawn back, the extractor lifted so as to clear the top of the body, and the bolt lever turned to the left; this brings the lug opposite the slot in the body cylinder, when the bolt can be withdrawn.

The ejector (*11*) is a spring, dovetailed into the bottom of the boltway. Its front end projects upwards and enters a groove in the head of the bolt, when the latter is drawn back. On the base of the cartridge striking the ejector, the cartridge is rotated upwards and to the right, and is ejected from the action.

There is no locking or safety bolt in the Danish rifle. The striker can be placed at half and full cock without opening the action. The Norwegian rifle has a safety bolt of the Mauser pattern.

The body has no features calling for special mention, except that the recess (*12*) for the locking lug is at the bottom of the front end of the body and is readily accessible for cleaning purposes.

The magazine (*13*) is a horizontal box under the body, closed by a door on the right side. The spring, lever, and platform, which press the cartridges out into the boltway, are attached to the door. When the door is open the platform is held back against it, allowing for the free introduction of the five cartridges it will hold. The magazine can be charged with the bolt either open or closed, and can be replenished at any time by one or more cartridges. This type of magazine is very slow compared with those which are charger- or clip-loaded. A charger is provided for this magazine, but it is a clumsy arrangement provided with a handle. The handle has to be raised from the side of the charger box and the rifle tilted to the left before the cartridges can be spilled into the magazine. A cut-off is provided by which the cartridges can be prevented from rising into the boltway.

The trigger mechanism is on the double-pull system. The sear is actuated by a flat spring.

The first compression of the main spring is given in the manner described for Mauser rifles, and the final compression by the sliding of the lug along the cam-shaped entrance to its recess.

Primary extraction is given by the bolt lever being forced back by working along the curved surface at the back of the body.

The Nagant Rifle — Three-line—Figure 179.

Russia .....Model 1900....7.62 mm..... .30 inch

The bolt of this rifle bears some resemblance to that of the French Lebel but is of far more complicated construction. There is a separate bolt-head (*1*) which revolves with the bolt (*2*) and carries two lugs. A connecting bar lies underneath the bolt, holds the bolt-head to the bolt, acts as a guide to the cocking piece, and helps to retain the bolt in the body. When the bolt is closed the lugs are horizontal instead of being one above the other as in Mauser and Mannlicher actions. The striker (*3*) is in one piece and is actuated by a main spring of 28 coils of .05 inch diameter wire set to a length of 4 inches. The cocking piece calls for no special comment except that it can be pulled back by hand and revolved to the left when it fits into a recess on the rear end of the bolt, which prevents the rifle from being fired or the bolt from being opened.

The extractor is small and fits into a groove in the bolt head.

The magazine is of box form and is made in one piece with the trigger guard. It is fitted with an interrupter (*4*) to prevent the possibility of double loading. The interrupter is a plate which works in a slot on the left of the body in a manner somewhat similar to the cut-off of the British rifle. On loading the magazine the cartridges are forced down from the charger and press the interrupter outwards and are thus able to pass it. In loading and firing the cartridge next below the top one is held down by a tooth on the plate until the top cartridge has been forced into the chamber and the bolt lever turned down. No other rifle is fitted with this device. The ejector is a projection on the edge of the interrupter.

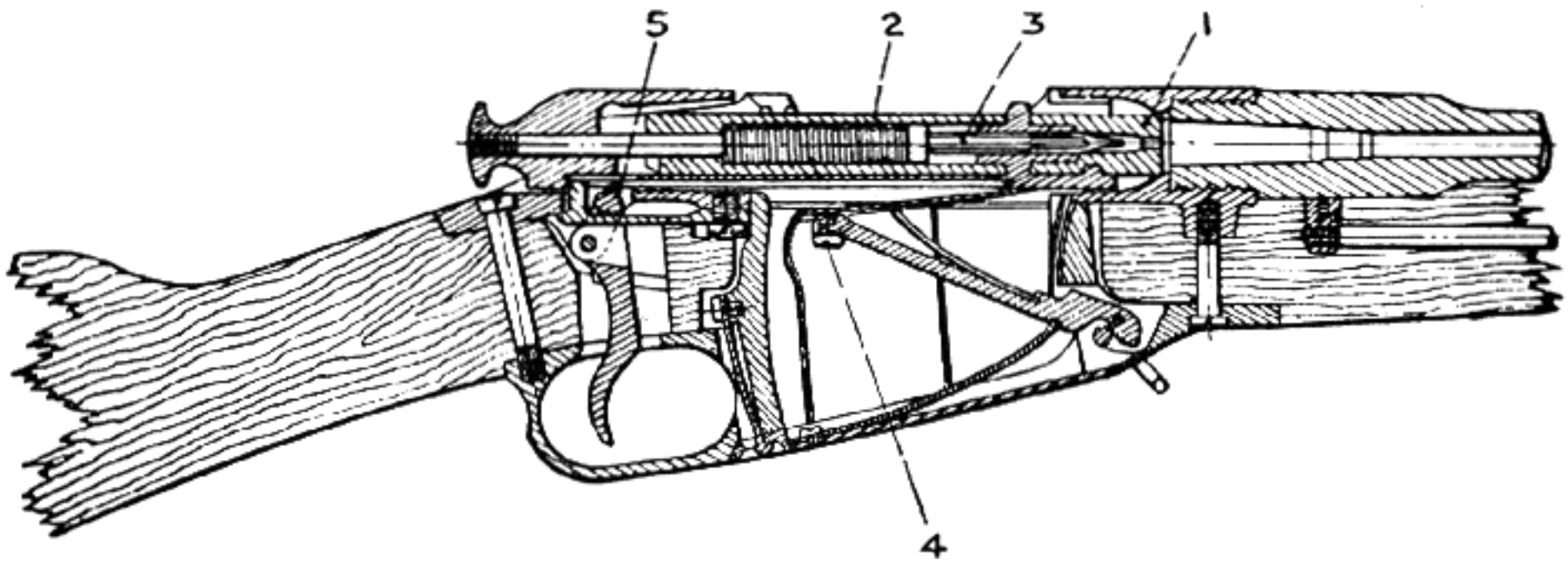

Fig. 179
Nagant Rifle (Russia)

The trigger mechanism gives a single pull. The trigger is provided with a tooth (*5*) at the top, which projects into the boltway and acts as a retaining arrangement. The trigger must be drawn back to depress this tooth and allow the front end of the connecting bar to pass over it, when the bolt can be withdrawn from the action.

Withdrawal of the striker from the fired cap is arranged for, and first compression of the main spring is given in the usual manner, by the cocking-piece nose working in a cam recess on the bolt end. Final compression of the main spring is given by the final turning down of the bolt and the action of the lugs on the sloped entrances to their seatings.

Primary extraction is effected by the front of a rib on the bolt working along an inclined plane in the body.

Straight-pull Action Rifles —

Austria—
Mannlicher .....Model 1895.. 8 mm... .315 inch
Switzerland—
Schmidt-Rubin ...Model 1909..7.5 mm... .295 inch

Compared with turning-bolt action, straight-pull actions are complicated both in design and functioning. There are more moving parts bearing against one another and consequently more friction. In turning bolts, primary extraction is obtained by the direct leverage of the bolt handle being transferred to cam surfaces on the bolt and body.

With a straight-pull bolt this additional leverage is more difficult to obtain, but to a limited extent it can be introduced during the unlocking of the action at the beginning of the backward movement of the bolt handle. In the Schmidt-Rubin, Austrian Mannlicher, and Ross, the locking of the action is effected by rotating lugs. The necessary turning movement of that portion of the bolt carrying the lugs is obtained during the unlocking of the action, at the beginning of the backward movement of the bolt handle, through the medium of helical grooves. A certain amount of additional leverage for primary extraction is obtained by cutting the lugs and their seatings in the body on a screw pitch. This, however, is not so effective as the direct cam action obtainable with a turning bolt. In theory, straight-pull bolts can be operated a trifle more quickly and are more easily worked without removing the rifle from the shoulder; but it is doubtful if there is any real advantage. Certainly no straight-pull rifle can be worked at the speed of the Springfield. Straight-pull rifles are said to be less likely to jam when exposed to sand and mud, as there is no turning movement to draw deleterious material down between the bolt and the left side of the body.

The Straight-pull Mannlicher — Figure 180. From the Austrian Official Handbook.

In this action the bolt is a hollow cylinder, reinforced at the rear end, where is the lever, terminating in the usual knob. The lever projects at right angles to the bolt. On either side of the bolt are ribs, *a, a,* which work in grooves in the body and prevent the bolt from turning. On the underneath of the front of the bolt are two feathers, *b,* which act as a retaining arrangement by coming in contact with two horns on the trigger when the bolt is drawn backwards. The trigger must be pushed forward to lower the horns and allow the feathers to pass, when the bolt may be withdrawn.

The underneath of the rear reinforced portion of the bolt is cut away for the stud of the cocking piece. The recess for the cocking piece is separated from that for the tail of the bolt head by a collar *d* secured by a screw, the point of which projects into the firing-pin hole, and, bearing against a flat

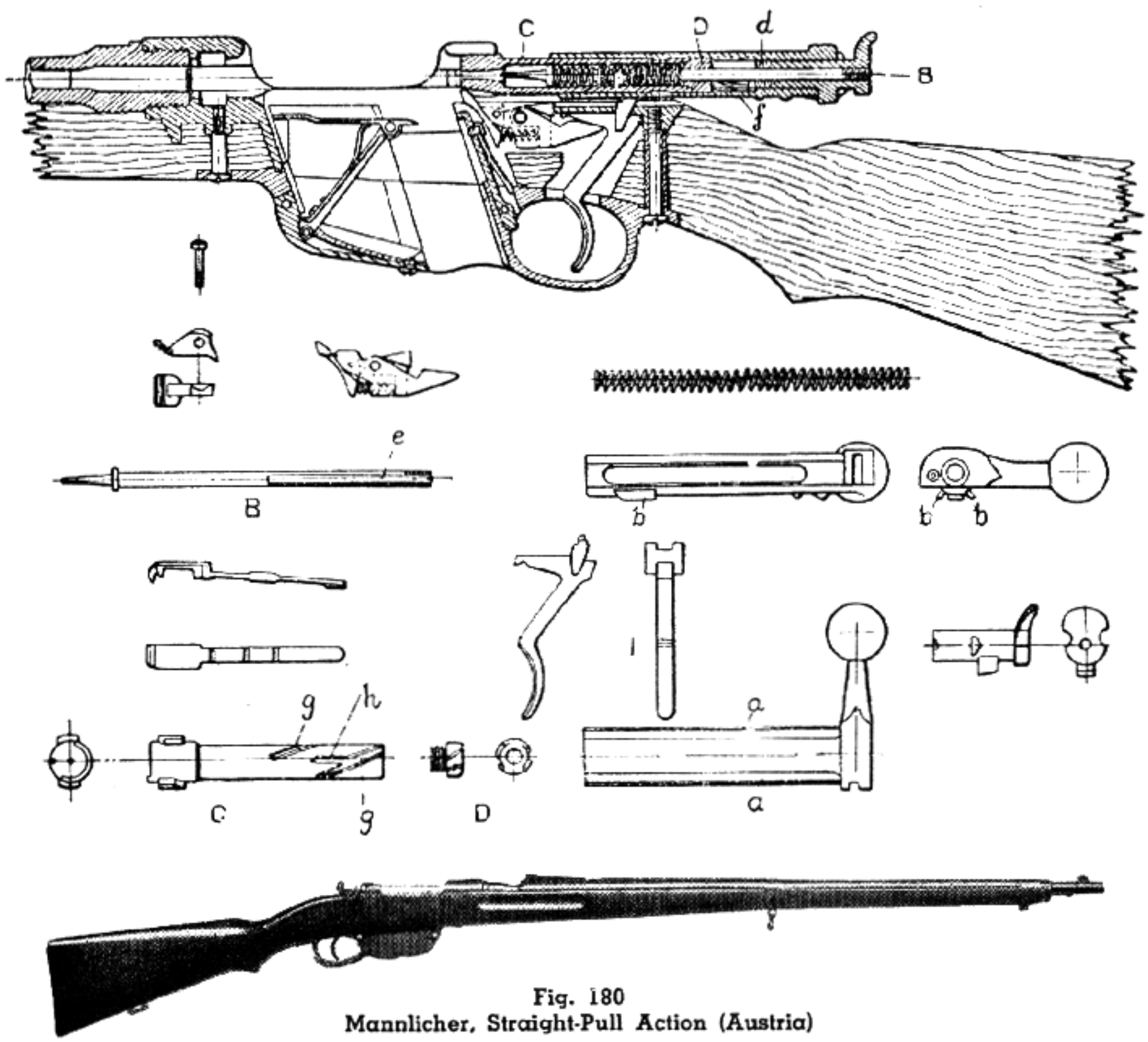

Fig. 180
Mannlicher, Straight-Pull Action (Austria)

e on the firing pin *B*, prevents the latter from turning. The safety bolt is pivoted in the left side of the reinforce. Inside the middle portion of the bolt are two helical feathers, *f*, which work in corresponding grooves, *g, g*, in the tail of the bolt head, and rotate it in opening and closing the bolt. A groove is cut on the inside of the right rib for the extractor.

The bolt head, *C*, consists of a head which projects beyond the face of the bolt cylinder, and the tail which enters the cylinder. The bolt head has cam-shaped locking lugs on either side, which enter the recesses of the body by way of the cam-shaped grooves and support the bolt head in the firing position. A groove is cut in the head for the ejector to work in. The rear end of the tail has two external helical grooves, already mentioned, in which work the feathers in the inside of the bolt cylinder. The helical grooves have each a small groove, *h*, leading out of them in the direction of the length of the bolt, one to the front and one to the rear. The groove to the front is on the top of the tail, that to the rear is on the right side when the bolt is opened.

The bolt head contains the main spring of .04 wire, coiled to a length of 4.9 inches, and the striker. The rear end of the bolt-head tail is closed by a screw plug, *D*, against which the main spring bears, the striker passing out through the plug. The other end of the main spring bears against a collar on the striker. The extractor is a long flat spring, which lies in the right rib of the bolt cylinder. The portion which projects fits over the right locking lug and terminates in a broad claw. The other extremity has a small nib on its under side, which engages in the two longitudinal grooves in the tail of the bolt head above mentioned. When the action is closed, the nib is engaged in the longitudinal groove on the top of the bolt-head tail; when the bolt is drawn back, the nib rises out of this groove, and when the bolt head has turned a quarter of the circle from right to left falls into the other groove. The right lug is then embraced by the head of the extractor and the extractor is drawn back by the bolt. The claw engages the top cartridge in the magazine immediately it is pushed forward by the bolt advancing, and holds it in all the backward and forward motions of the bolt, thus rendering double loading impossible.

The cocking piece screws on to the end of the

striker and works in the rear end of the bolt cylinder. In its left side is a groove in which the locking bolt engages, when it is employed to lock the action with the spring eased. At full cock the locking bolt, when used as a safety bolt, is interposed between the front face of the cocking piece and the rear face of the bolt cylinder; the tooth of the bolt is cam-shaped, and when pushed into position forces back the cocking stud from engagement with the sear.

The body calls for no special comment, except that the tang groove for the cocking-piece stud to work in is undercut on either side to take the feathers, *b, b,* on either side the front end of the bolt. Underneath the front part of the body is a downwards projection which transfers the shock of recoil from the barrel and body to the stock. A similar but larger projection forms the prolongation of the front of the magazine.

The sear consists of two components, the body and the bent; they are both pivoted on the same pin, which passes through the action body. The bent fits in a slot in the body.

The ejector is pivoted to the front of the sear body. Its bottom end is pressed forward by a small spiral spring, the other end of which presses the sear and sear bent backwards. The upper end of the ejector is slightly depressed by the bolt; the spring is partly compressed, and tends to keep the sear and sear bent up to their work.

The trigger is in the form of a bell-crank lever, the long arm projecting downwards through the trigger guard, the short arm terminating in a hook which engages the rear of the sear. At the angle is the cross-piece with the two horns which project into the boltway and prevent the withdrawal of the bolt, as already described. The trigger is not pivoted to the body in any way, but is supported in its groove by the sear.

When the trigger is pressed, the bent of the sear is depressed, releasing the cocking stud and allowing the striker to fly forward; at the same time the front of the sear body is raised into the boltway behind the safety projection on the back end of the under side of the bolt, preventing any backward motion of the latter while the arm is being fired. Further, as the bolt is pushed forward, this safety projection, sliding over the projecting front portion of the sear, prevents the latter rising, and consequently prevents the bent of the sear from being lowered, by pressing the trigger, until the bolt is completely closed.

The magazine and guard are in one piece. The former is clip-loaded with five cartridges, and is similar in most particulars to that already described for the Roumanian Mannlicher.

The bolt is actuated by a straight backwards-and-forwards pull and push. When the lever is pulled to the rear, the bolt cylinder cannot revolve, owing to the ribs on it working in the grooves of the body, and the feathers, in the undercut grooves in the tang. The bolt head, on the other hand, cannot come to the rear until the locking lugs have been disengaged from their recesses in the body, and this is effected by the turning motion given to the tail of the bolt head by the helical feathers in the inside of the bolt cylinder, working in the bolt-head tail. Primary extraction is given by the cam shape of the ends of the grooves in the body in which the locking lugs work. The first motion of the bolt to the rear partly compresses the main spring. As soon as the locking lugs are disengaged from the body they are in prolongation of the ribs in the bolt cylinder, and the whole bolt can then be drawn to the rear.

The Schmidt-Rubin — Figure 181. In this action the body departs from the shape which, with minor differences, has been seen in all rifles already discussed. Behind the magazine way it forms a complete cylinder for a length of 4½ inches and is thus of considerable length and clumsy. On the right side, and forming part of the body, is a smaller cylinder opening into the larger one. The bottom of this small cylinder is slotted for the tooth of the retaining bolt. The main cylinder is slotted for the sear and grooved for the striker stud to travel. This is in place of the grooved tang found in most other rifles. The main cylinder is also grooved longitudinally on each side for the bolt lugs to work in. Those grooves lead into the lug seatings, which are cut on a screw pitch. The rear part of the body forms a short tang, which is bored for one of the three action screws.

The bolt, which is made up of the bolt cylinder *C*, the locking sleeve *D*, and the bolt cap *E*, is operated by means of the action rod *F*. The bolt cylinder is bored out from the rear for the striker and main spring, and is slotted on the right side to admit the tooth, *a*, of the action rod. A circular flange affords a bearing for the front end of the locking sleeve. In front of this flange the bolt cylinder is grooved on both sides to allow it to pass through the turned-in sides of the magazine.

On the left is a deeper groove for the ejector. On top a little to the right is a flat for the extractor. The front end of the bolt cylinder is permanently screwed in. The face of the cylinder is recessed for the head of the cartridge, but the rim of the recess is not cut away at the bottom to allow the heads of the cartridges to rise up at once under the claw of the extractor when loading, therefore double loading is possible. The bolt cap *E* screws on to the

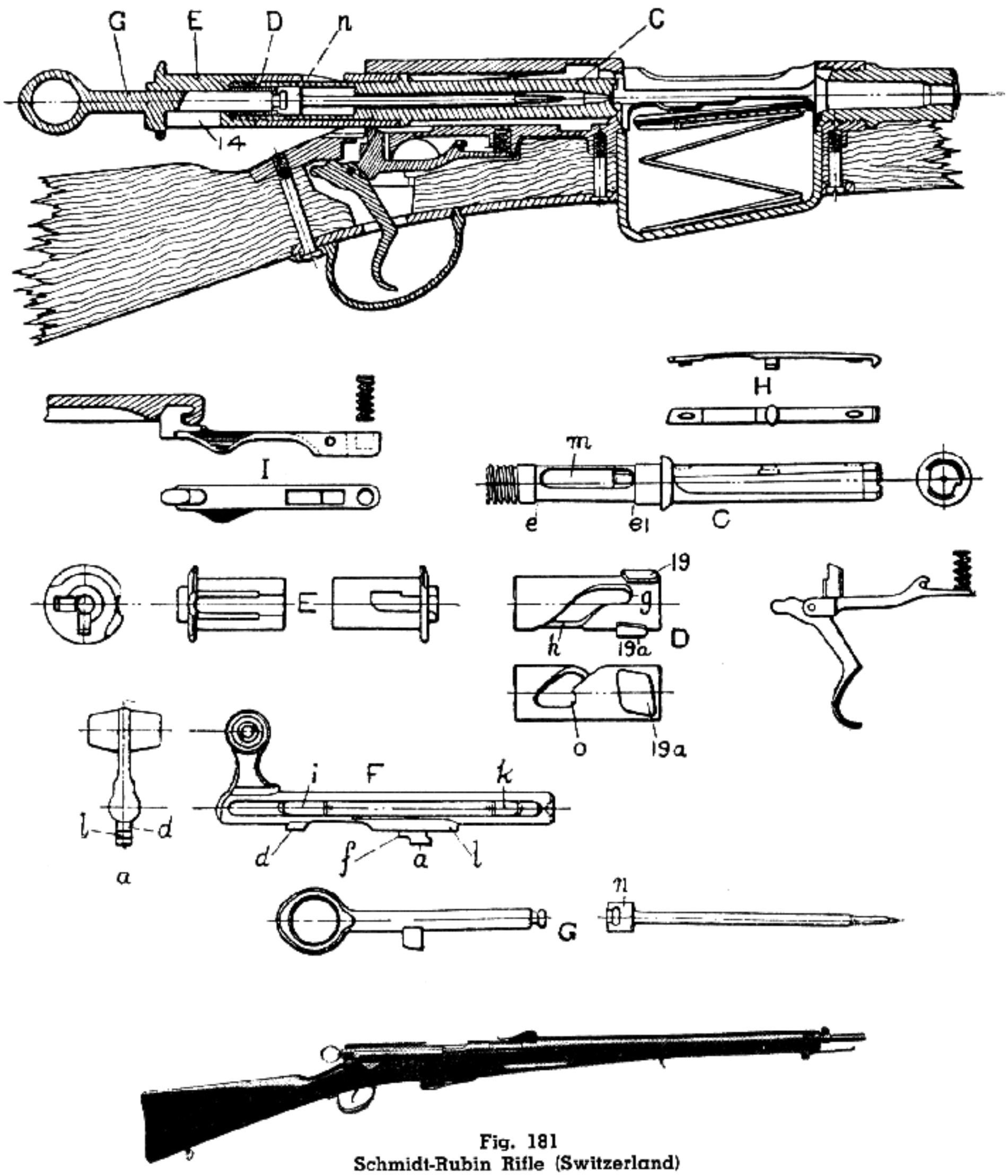

Fig. 181
Schmidt-Rubin Rifle (Switzerland)

rear end of the bolt cylinder. It is bored out for the striker, and has a shoulder inside, against which the rear end of the main spring bears. At the rear end is a broad flange, with a clearance for the action rod. It is slotted out for the striker stud. At right angles to this slot is the safety slot for the striker stud. On the right side is a rib with an undercut groove for the stud *d* on the action rod. The front end forms a bearing for the rear end of the locking sleeve. The locking sleeve fits loosely behind the flange on the bolt cylinder, the diameter of the latter being slightly reduced from *e* to *e-1* to lessen friction. At the front end are the two lugs, which resist the backward pressure of the cartridge on firing. The top lug is slightly in advance of the other, and their front and rear faces are cut with a screw pitch. A helical slot for the stud *f* on the action rod runs from *g* to *h*. A recess in this slot affords a seating for the stud *f* when the action rod is drawn back. The action rod works in the cylinder in the body. On the right, at the rear end, is a lever for operating the rod, to the end of which lever, on either side, vulcanite knobs are fixed by screws. Underneath is a groove for the tooth of the retaining bolt. Within this groove are two projections, *i*, *k*, against which the tooth of the retaining bolt bears, in the open and closed positions, and holds the action rod steady. On the left a dovetail stud *d* fits in the undercut groove on the bolt cap. The rib *l* works in the slot between the cylinder in the body, in which the bolt works, and the cylinder for the action rod. The stud works in

the helical groove *g, h,* in the locking sleeve, which it causes to revolve. The stud *a* enters the bolt cylinder through the slot *m,* and lies in front of the head *n* on the striker.

The striker *G* is divided into two parts; the front part has a short point at the front end, and a head *n* at the other. The rear part has a button at one end, which fits into a suitable recess in the head, and underneath carries the striker stud, which works in the slot (*14*) in the bolt cap. The striker can be drawn back by means of the ring on the rear end.

The main spring consists of 15 coils of flattened steel wire .06 x .04 set to a length of 2.3 inches.

The extractor, *H,* is a flat spring terminating in the usual claw, projecting beyond the face of the bolt. It is provided with a stud with circular stem and oval head. Near each end are two small projections. To fix the extractor, place the stud in the oval hole in the bolt cylinder, with the extractor at right angles to the latter, then turn the extractor parallel with the bolt, and the head of the stud will lock under undercut grooves, and the projections will spring into seatings cut for them. A shallow recess enables the end to be raised when removing the extractor.

The ejector is a pin with a broad head and flat point, which passes through the left side of the body. It is secured by a keeper screw.

The retaining bolt, *I,* is pivoted underneath the small cylinder on a projection, which fits into the slot through which the axis pin passes. At the front end is a spiral spring which fits in a hole and bears against the bottom of the cylinder. On the rear end is a tooth, which is pressed upwards by the spring into the groove in the action rod. When the latter is fully drawn back this tooth locks into the front end of the groove. To withdraw the bolt push it forward slightly, and depress the tooth by pressing on the thumbpiece.

The trigger mechanism is on the double-pull system and differs but little from those already discussed under turning-bolt Mannlicher actions. The sear bar is pivoted at its forward end and the sear is kept up to its work by a spiral spring disposed vertically. The sear bar is rather longer than usual. The trigger is of the usual shape and is provided with two humps for taking the two pulls. It is pivoted to the rear end of the sear bar.

The magazine is made of sheet steel and holds six rimless cartridges. The bottom is strengthened by a steel strap brazed on. In the bottom are two openings for the escape of dust, which, however, is also liable to find its way in through these openings. The magazine box is inserted through an opening in the trigger guard and is held in position by a spring catch on the right side of the box engaging on the trigger-guard plate. The platform is shaped to raise one of the two columns of three cartridges higher than the other and present the cartridges in the two columns alternately at the top of the magazine. The platform can be slipped out of the box to the rear and is actuated by a zigzag wire spring with three coils. The magazine can be filled either by the insertion of single cartridges or from a charger. The charger is made of *papier maché* strengthened and protected at the bottom by a tinned iron strip, two tongues on either side of which are turned over to retain the cartridges.

The action of the mechanism is as follows: In the first motion of drawing the action rod to the rear, the tooth *f* moves in the straight path of the slot *g* of the locking sleeve; the tooth *a,* bearing against the head of the striker, begins to draw it back, and the projection *i,* in the groove of the action rod, depresses the tooth *f,* which is constrained to move in a straight line, on account of the rib *l* moving in the slot between the two cylinders, bears against the curved part of the slot on the locking sleeve, and rotates the sleeve, turning the lugs from in front of their seatings into the diagonal grooves in the body. On account of the lugs and their seatings being put on a screw pitch, the entire bolt is withdrawn about $\frac{1}{16}$ inch; this forms the primary extraction. The tooth *f* has now got to the back end *h* of the slot in the locking sleeve, and has drawn the striker fully back. The whole bolt is now free to come back; as it does so, the lugs (*19* and *19-a*) on the bolt sleeve, pass along the diagonal grooves and further rotate the locking sleeve, until the recess at the end of the locking-sleeve groove slips in front of the stud *f.* The latter is pressed forward into this recess by the head on the striker, actuated by the main spring. On continuing the backward motion, the projection in the action-rod groove depresses the retaining-bolt tooth, and the latter then strikes the end of the groove and arrests the backward motion. The dovetailed stud *d* on the action rod, working in the groove on the bolt cap, serves to keep the action rod parallel with the bolt.

On pushing forward the handle of the action rod the retaining tooth in the action-rod groove is depressed by the projection, and the whole bolt mechanism moves forward. When the lugs pass down the diagonal grooves the locking sleeve is rotated, so that the recess *o* no longer retains the stud. When the flange on the bolt cap arrives within $\frac{1}{16}$ inch of the cylinder on the body, the sear bent engages the striker stud and the lugs on the bolt cylinder have arrived at the entrance to their seatings. On pushing home the action rod the

stud *f* passes along the groove in this locking sleeve and revolves the sleeve, placing the lugs in their recesses, and fully closing the bolt. As the bolt is finally closed the extractor claw springs into the groove round the head of the cartridge, which has been pushed forward out of the magazine by the bolt, and the retaining-bolt tooth rises behind the projection in the action-rod groove, and prevents the action rod from slipping back.

By drawing back the striker, and revolving it so that the striker stud points to the left, the latter enters the safety slot in the bolt cap. The point of the striker cannot then reach the cap of the cartridge, and the bolt cannot be drawn back, as the rear face of the striker stud is engaged by the shoulder in the groove in the bolt cap.

The Ross — Figure 182. The Ross was, previously to the early days of the Great War, the arm of the Canadian forces, but is now obsolete. There have been various models, some with solid lugs and some with lugs interrupted as in the breech mechanism of big guns, and with differences in sights and in other particulars.

The essentials of the action are, a bolt (*1*) and handle machined solid from one piece, and a turning portion (*2*), carrying the lugs (*3*) on the front end and containing the main spring and striker. The lugs, striker and cocking piece, which is secured by a screw thread to the end of the striker, are similar in design to those of the Mauser bolt. The Ross bolt is provided with ribs which work in longitudinal grooves in the body and prevent the bolt from turning. On the inside is a screw thread (*4*) which engages with a similar screw thread on the turning portion and gives it the necessary turning movement to lock and unlock the lugs. The lugs work in cam-shaped recesses in the fore-end of the action-body in the usual way.

The screw thread on the turning portion is not cut right round it but is on two spiral ribs.

The extractor, which has the usual claw end at the front, is provided with a long tail on which is a lug which engages with the rear edge of the bolt head and takes the pull during extraction. A cam surface works against this lug and causes the claw to grip the case more firmly during extraction.

The trigger (*5*) is a bent lever pivoted to a frame (*6*) which also carries the sear (*7*). When the trigger is pressed the lower end of the sear is forced forward and the nose (*8*) therefore depressed from engagement with the bent. At the same time the stop (*9*), which is pivoted on the sear, is raised and engages behind the two lugs (*10*) on the under side of the bolt, thus preventing the bolt being withdrawn at the same moment as the trigger is

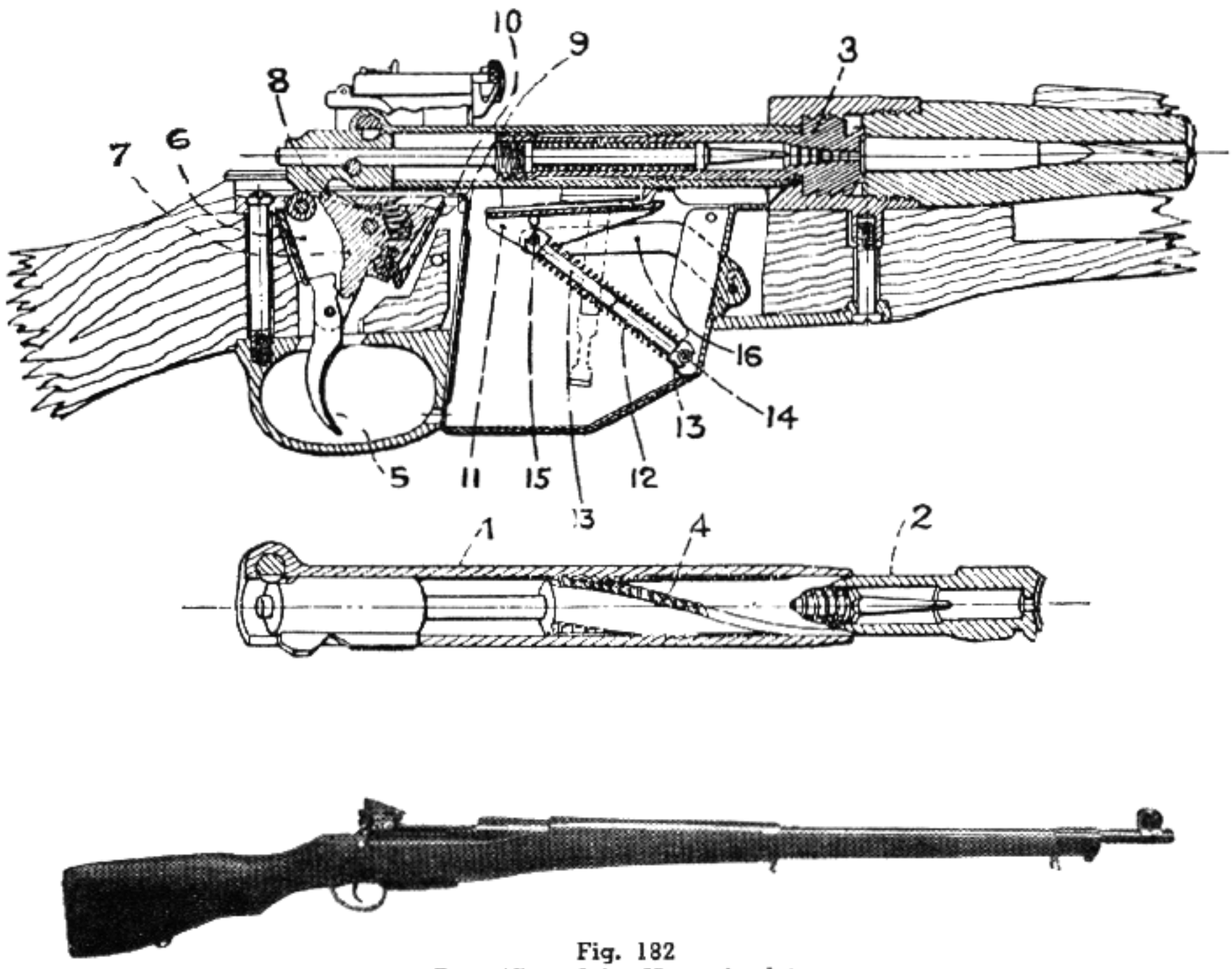

Fig. 182
Ross (Canada). Now obsolete

pressed and serving as additional safety lugs. A double pull in the trigger action is arranged for by two ribs on the upper end of the trigger in the same manner as in the British Mark III.

The magazine consists of a box enclosed in the stock, and retained by the trigger guard. It is provided with means for charger-loading, and is of interesting design. The follower (*11*) is supported by the spring (*12*) which works on a telescopic piston or plunger (*13*) pivoted at (*14*) and (*15*). Its movement is controlled by two arms, one of which (*16*) (that on the far side) is shown in Figure 182. The separate axes on which these arms pivot both in the body of the magazine and in the platform are so arranged that the platform remains parallel to the axis of the rifle throughout the greater part of its movement.

In an earlier model of this rifle no provision was made for charger-loading, but, by means of a lever, the platform of the magazine was connected to a fingerpiece conveniently placed on the right side of the stock to be operated by the fingers of the left hand in the firing position. By depressing the fingerpiece the magazine follower was lowered and cartridges could then be dropped into the magazine with the right hand.

Barrels — The length of a rifle is governed by the length of the barrel with which it is fitted. Barrels as short as 20 inches can be made to shoot well; but a certain amount of length is necessary to give a reasonable handle for the bayonet. The majority of countries use rifles of about 4.25 feet, with barrels measuring about 31 inches. Great Britain and the United States, however, are armed with short rifles just over 3.5 feet long with barrels shortened to correspond. The Swiss Schmidt-Rubin, which was a short rifle in the 1900 Model, has been redesigned with a barrel of 30.75 inches. A well-designed short rifle has the merit of being handier for snap-shooting than a long rifle. It also obviates the necessity of providing a carbine for the mounted services. One arm for all services is a great convenience in details of storing, issue, and upkeep.

The weight of the barrel, within limits, has little effect on the weight of the complete rifle. The British and the United States Springfield rifles are by no means the lightest military rifles. The weight is governed, to some extent, by the consideration that a light rifle gives an unpleasantly heavy recoil with cartridges of the usual military specifications. Most modern rifles weigh, complete, without bayonet, between 8.5 and 9 pounds, yet there is more than a pound difference between the lightest and the heaviest barrels.

The following table shows the barrel length and weight, and the relation between these dimensions, of a few foreign rifles for comparison with our own service rifle:

Rifle	*Bore*	*Rifle weight lbs. oz.*	*Barrel length, inches*	*Barrel weight, lbs.*	*Lbs. per inch*
British	0.303	8-10	25.19	2.156	.083
Springfield	0.300	8- 8	23.79	2.906	.122
Roumanian	0.256	8-13	28.56	3.093	.108
Nagant	0.315	8-15	31.50	3.093	.098
Japan	0.256	8-12	31.30	2.969	.095
Chile Mauser...	0.276	8-13	29.20	2.719	.093
Lebel	0.315	9- 3	31.50	3.187	.115

It will be seen from the above table that the British has the lightest barrel in actual weight and also the lightest barrel relative to its length.

When firing, the barrel commences to vibrate before the bullet has left the muzzle. This vibration exercises a very disturbing effect on the accuracy of the shooting on account of the difficulty of insuring that the fore-end shall influence the vibrations to the same extent for every shot. With a heavy barrel the vibrations are not so severe and the influence of the fore-end is less important.

On account of the heavy pressures set up on firing, but which fall off very rapidly, barrels are made heaviest at the breech end. This increased portion is called the "reinforcement." The effect of this weight of the metal on the external contour of the barrel is exaggerated by the size of the chamber necessary to accommodate the case. The exterior of the barrel from just in front of the reinforcement to the muzzle is usually slightly tapered. In the German, Spanish and Turkish Mausers the barrel is turned down externally in steps, with the idea of breaking up the vibrations on firing. Barrels are browned or blued to protect them from rust on the outside and to give them a dull non-reflecting surface. In some cases the outer contour is slightly increased at appropriate points to afford a seating for the sights.

The degree of twist given to the rifling would seem to be governed a good deal by the individual preferences of the designers. It is essential that it should be enough to give the bullet sufficient spin to keep it end-on in its flight; but usually there is an ample margin beyond the minimum necessary to give stability. In most rifles the twist is about 1 turn in 31 calibers. The most rapid is the French, with 1 turn in 30 calibers, and the slowest the Krag-Jorgensen, with 1 turn in 37.5 calibers. The Italian Carcano rifle is peculiar in that it has a progressive twist.

British Service Rifle — The short, magazine, Lee-Enfield rifle was approved on 23rd December, 1902, to take the place of the magazine Lee-Metford and magazine Lee-Enfield (familiarly known

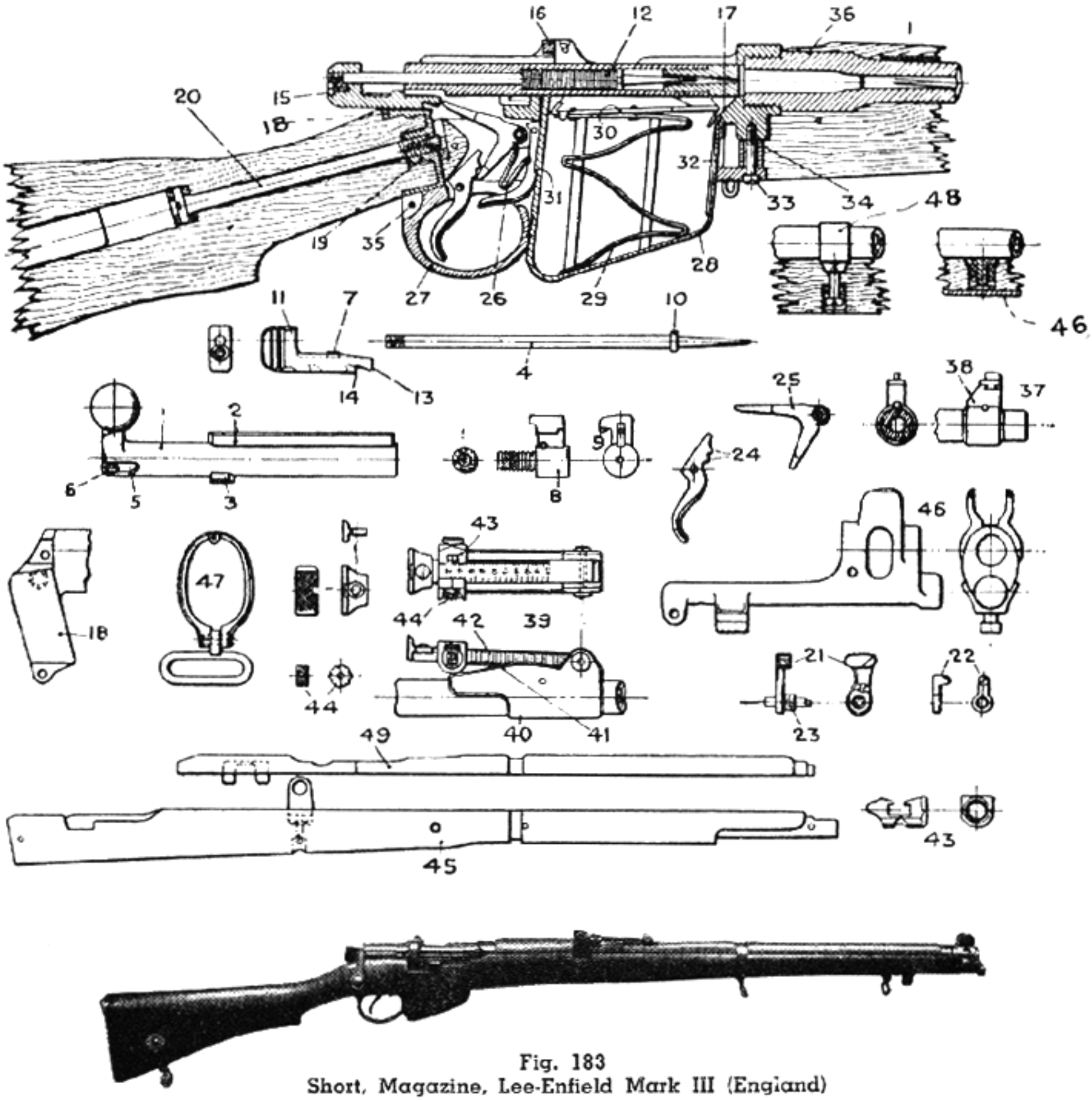

Fig. 183
Short, Magazine, Lee-Enfield Mark III (England)

as the "long rifle"), various marks of which had been the service weapon since 1888. Of the rifle there are six marks, Marks III, III*, and IV now being in use.

Mark I.....Approved 1902. New rifle.
Mark II....A conversion from long rifle. Similar to Mark I.
Mark III...Approved 1907. Improvement on Mark I.
Mark III*..Approved 1908. No cut-off. No long-range sights.
Mark IV ...Conversion from old marks. Similar to Mark III.
Mark V....Provisionally approved 1922. Improvement on Mark III. Aperture rear sight. (Superseded before being produced in quantity.)
Mark VI ...Improvement on Mark V.

All the above marks have the Lee bolt action, similar to that approved in 1888 for the Lee-Metford magazine rifle, Mark I. Details of the Mark III and Mark III* are as follows (see Figure 183):

The bolt (*1*) is simple in construction. It is cylindrical and has a bent lever at the rear end, terminating in a round knob for convenience in handling. The shape and position of the lever are very convenient for rapid manipulation. On the right side of the bolt cylinder is formed a solid rib (*2*), which works in a slot in the rear of the body and acts as a guide when the bolt is worked backwards and forwards. On the opposite side to the rib, and having its rear face level with the rear face of the rib, is a solid lug (*3*). The lug and the rear face of the rib engage against appropriate bearings when the bolt is locked and support the bolt on firing. The disadvantages and advantages of having the lugs so far removed from the face of the bolt-head have been discussed. The rear faces of the rib and lug are cut on a screw pitch corresponding to the slope of their seatings on the body. On turning down the bolt this gives the necessary leverage to force the leverage for primary extraction on turning up the bolt. The bolt cylinder is bored out to take the striker (*4*) and main spring. The rear part of the boring is constricted to the diameter of the striker, to form a seating

for the rear of the main spring and to act as a guide for the striker. Underneath the rear end of the bolt cylinder is a recess (*5*) formed by a long groove on the right and a short groove on the left, connected together in front by a cam-shaped face and separated by a stud (*6*). On raising the bolt lever the cocking-piece stud (*7*), which is resting in the right-hand or long groove, is forced backwards by the cam-shaped face until it rests in the left-hand or short groove, thus partially compressing the main spring and withdrawing the point of the striker from the face of the bolt head. This is necessary to prevent the striker point from firing the cap of the next cartridge as it is fed upwards from the magazine and pushed forward into the chamber.

The bolt head (*8*) has a tenon which screws into the bolt cylinder. On it is a solid projection which has a hook (*9*) on its right side which engages with a rib on the right side of the body and prevents the bolt head from turning with the bolt cylinder. On the side of the bolt head is a hole to allow for the escape of gas in event of a blow-back or burst case. The projection on the bolt head is slotted to take the extractor, which is a short steel bar with the usual claw at the end. It is pivoted on a screw at the rear of the slot and is kept up to its work by a small V-spring let into the slot above it.

The striker is in one piece and has a collar (*10*) against which the front end of the main spring bears. The front face of the collar seats against the rear end of the bolt-head tenon in the "fired" position and thus limits the protrusion of the striker. Originally there was, in front of the collar, a small stud which fitted into a recess cut for it in the rear of the bolt-head tenon. This stud was later discarded, but both the modified and unmodified types of striker are still in use in the service. The end of the striker is screw-threaded for attachment to the cocking piece (*11*).

The main spring (*12*) is of coiled steel wire set to a length of 3½ inches.

The cocking piece has a long tongue projecting to the front and lying against the under side of the bolt when it is assembled. The front end of the tongue forms the full bent (*13*) and a groove cut across it the half bent (*14*). A stud (*7*) on the upper side of the tongue works in the two grooves already mentioned in the rear of the bolt cylinder. On the left side the tongue is recessed in two places for the locking bolt to engage in. The rear of the cocking piece was originally formed with a circular projection, cut away on the left-hand side and roughened to serve as a grip for finger and thumb when cocking without operating the bolt. The Mark III* rifle was fitted, as an alternative to facilitate manufacture, with a cocking piece which had its rear end formed as a flat piece, grooved on each side to give a grip for finger and thumb. Both these types of cocking piece are now interchangeable in the Marks III and III*.

The bolt may be easily stripped for cleaning and examination. The striker-keeper screw (*15*), which retains the striker in position in the hole drilled and tapped for it in the rear portion of the cocking piece, having been removed, the bolt head is unscrewed. Those strikers which are fitted with a stud on the front face of the collar can be unscrewed by means of the bolt head, but to avoid the possibility of damage to the bolt-head tenon this method should not be employed, and the special tools with which armorers are provided should be used.

The body is cut away on the right side for the greater part of its length to allow the projection on the bolt head to work backwards and forwards. The hook on the projection of the bolt head engages in a slot or rib, which is cut away at the rear end just sufficiently to allow the hook on the bolt head to be free. There is a small retaining catch forming a continuation of the rib at this point. When the bolt is drawn back as far as possible the hook can be forced up over this catch and the bolt removed from the body. The retaining catch is a small spring secured by the rear-axis screw on the right side of the body. The rear of the body does not form a complete cylinder, but is slotted out at the top to afford passage for the rib on the bolt and at the bottom for the bolt lug and cocking pieces. The right-hand side of the rear of the body forms the right resistance shoulder for the rib on the bolt, and opposite this on the left side is the slot into which fits the bolt lug, the rear face of the slot forming the resistance shoulder on this side of the body. It is cut on a screw pitch to assist in forcing the cartridge home in the chamber and in the final compression of the main spring when the bolt is turned down into the locked position for firing. The recess for the lug is at the rear end of the body, opposite the resistance shoulder; the entrance to it is cut on an incline in the usual way to give the leverage necessary for primary extraction.

In front of the resistance shoulder, at a sufficient distance to give clearance for the bolt-head projection when the bolt is being removed, a charger-guide, in the form of a bridge (*16*), is riveted to the left and right sides of the body. Immediately in front of the charger-guide, the left side of the body is cut away in a semicircle to allow the thumb to sweep the cartridges out of the charger into the magazine. The front end of the body is a complete

cylinder, into which the barrel screws. As no space has to be provided for the lug recesses, the bolt head enters a little distance only into this cylinder, which is not much recessed and is readily cleaned. Beneath the barrel chamber the action body is sloped off (*17*) to provide a way or guide for the cartridges entering the chamber from the magazine. The right side of the body is slotted to take the cut-off. There is no tang as in Continental actions. The place of the tang is taken by a socket (*18*), which is part of the body and projects downwards. Into it the butt fits, and in the center of it is a hollow, threaded boss (*19*) for the stock-bolt (*20*). The rear end of the body, including the upper surface of the socket, is grooved to allow passage for the lug and cocking-piece tongue. The usual opening beneath the body is provided for the magazine.

At the rear end, on the left of the body, two holes are drilled for the locking bolt (*21*) and locking-bolt safety-catch (*22*). The locking bolt is a stem, fitted with a roughened thumbpiece by which it may be actuated. The stem fits into a hole in the body leading into the groove for the cocking-piece tongue. The end of the stem is cut away so that when the thumbpiece is in the forward position the cut-away portion is level with the floor of the groove for the cocking-piece tongue and the cocking piece can pass over it. When the thumbpiece is drawn to the rear the solid portion of the stem rises in the groove and engages in one of two recesses cut in the cocking-piece tongue, according to whether the latter is in the cocked or fired position. The bolt can thus be locked fired, or cocked. When the stem of the locking bolt engages in the front or cocked-position recess, it draws back the cocking piece slightly, removing the bent from contact with the nose of the sear. On the stem of the locking bolt, close to the thumbpiece, is cut a steep-pitched thread (*23*). On this thread works the arm of the safety catch. On the end of this arm is a short stem which fits in the hole entering the boltway of the body. When the thumbpiece of the locking bolt is in the forward position, this stem is within its hole and clear of the bolt in the boltway. When the thumbpiece is drawn to the rear, the threads on the locking-bolt stem and safety-catch arm push the stem forward so that its end enters the short groove on the end of the bolt and prevents the latter from being rotated and drawn back. By the combined action of locking bolt and safety catch, both cocking piece and bolt are positively locked against any possibility of accidental opening or discharge.

The ejector is a small screw which projects slightly into the boltway on the left side. On drawing back the bolt the back edge of the rim of the cartridge case catches against the end of this screw and is thrown out of the rifle to the right. In practise this action only takes place in the case of a bulleted round, when the case is held on the bolt face until the bullet is clear of the breech. An empty case, being shorter and therefore being clear of the barrel sooner, is normally thrown out to the right by the action of its rim frictioning against the sloping portion of the groove hollowed out in the left side of the body immediately behind the breech.

The trigger mechanism is on the double-pull system already described in the account of Continental rifles, but differs from them in most particulars, save for the provision of two ribs (*24*) on the upper part of the trigger. The sear (*25*) is a two-armed, bell-cranked lever, pivoted to the projection beneath the body on the same screw which holds the retaining catch. It is pressed to the rear and upwards by a U-shaped spring (*26*) which also serves to keep the magazine-catch up to its work. The long upper arm passes through a hole in the body into the groove for the cocking-piece tongue, and engages with the full bent on the latter when the bolt is pushed forward. The short arm projects downwards. The trigger is pivoted on a pin which passes through the trigger guard (*27*). The two ribs are on the front surface of the upper part of the trigger. On pressing the trigger the lower of the two ribs engages with the short arm of the sear and causes the latter to revolve on its axis until the end of the long arm has come close to the edge of the bent. The pull during this movement is light, as the rib is close to the trigger pivot and great leverage is obtained. The fulcrum is then transferred to the upper of the two ribs, which, being further from the pivot, affords less leverage, and a stronger pull is therefore necessary to make the sear move the small remaining distance which releases the cocking piece and allows it to fly forward. The motion imparted to the sear by the motion of the trigger acting through its upper rib is, however, more rapid, and the sear is thus drawn smartly off the bent.

The action of the bolt mechanism has already been indicated in the description of the parts. The complete sequence is as follows:

On raising the bolt lever the cocking piece is prevented from turning with the bolt by the fact that the tongue is engaged in the groove in the body. The bolt head is prevented from turning by its hook engaging with the rib on the right side of the body. As the bolt is turned, the cam face at the end of the two grooves on the rear of the bolt forces back the stud on the upper side of the tongue of the cocking piece. This draws the end of the striker clear of the end of the bolt head and par-

tially compresses the main spring. As the turning movement continues, the sloping face of the lug working against the sloping face of the recess in the action causes the whole bolt to move to the rear, effecting primary extraction. When the bolt has been turned as far as it will go, the rib touches the left side of the body and is opposite the gap in the rear of the body. The lug is now in the groove for the cocking piece. The bolt can be drawn back until the projection on the bolt head strikes against the resisting shoulder. This acts as a retaining arrangement. The stud on the cocking-piece tongue has now fallen into the recess in the front end of the short groove on the bolt and the cocking piece cannot revolve and is retained in position for entering its groove in the body. On pushing forward the bolt the full bent of the cocking piece engages the end of the sear, and the main spring is further compressed. As the bolt is driven forward the stud between the long and short grooves on the bolt passes the stud on the now stationary cocking piece. On turning down the bolt, the bolt is forced forward by the action of the sloping faces on the rear of the lug, and the rib working against their bearings on the body. In the complete action of closing the bolt the free forward travel is 3 inches; the travel after the sear has engaged with the bent, when the pressure of the main spring has to be overcome, is ½ inch, and the final forward movement, on turning down the lever, ⅛ inch. When the action is cocked, the stud on the cocking-piece tongue lies in the long groove in the body, and the cocking piece and striker are free to fly forward when the sear is released from the bent by pressing the trigger. Should the trigger be pulled when the bolt is not completely closed, the stud on the cocking-piece tongue strikes against the stud between the two grooves on the bolt and either causes the bolt to close, automatically, before the striker point reaches the cap of the cartridge, or else the two studs meet full face and the striker is prevented from flying forward. If the action is then closed by hand the sear falls into the half-bent and the action is locked owing to the two studs lying side by side, preventing the rotation of the bolt. It is possible to cock the action fully by drawing back the cocking piece.

The magazine (*28*) is a detachable sheet-steel box, strengthened by two flutings on either side. It contains ten cartridges in two columns which are fed up as required by the action of a zigzag ribbon steel spring (*29*). The platform (*30*) is so formed that the left side is higher than the right. The left-hand column of cartridges is thus presented to the bolt first and then the right-hand column, cartridges being pushed forward alternately from each column until the magazine is empty. The sides of the rear end of the box are extended slightly upwards and turned in to retain the cartridges. In the No. 1B (stamped with the figure 4) magazine there are small inturning projections made by turning over the top of the sides of the box in front. These serve to keep the platform in position when the magazine is empty. In earlier marks of magazine a stop clip is pivoted on the right side of the box, in front, which helps to keep the platform in position when the magazine is empty and keeps the bullet of the upper cartridge of the right-hand column in position when the magazine is full. This clip can be drawn down to the front when the magazine has been detached from the body, and the platform and spring can be withdrawn for examination and cleaning. The spring is secured to the No. 3 platform by a tongue of metal turned over on the right-hand side and by two rivets. In earlier marks it is secured by two tongues of metal on each side. Downward-turned tongues of metal on the front and on the left-hand side at the rear of the platform serve as positioning guides. A small turned-down tongue on the right side at the rear serves the same purpose. At the back of the box is a rib in which is cut a tooth (*31*) to engage in the magazine retaining spring catch. In the No. 1A and 1B (stamped 3 and 4) magazines there is also a small auxiliary spring which bears against the front of the trigger guard. Into the front of the box is hooked and secured the magazine platform auxiliary spring (*32*) which serves to keep the front end of the platform at a proper angle when the magazine is full and also protects the front of the box from being dented by the points of the bullets.

The cut-off is pivoted to a vertical screw in the projection on the right side of the body. It works in a slot parallel to and below the rib on the body for the bolt-head hook. It is provided with a cylindrical thumbpiece, bored out for lightness and ribbed on top for the thumb to grip. It is spring-tempered and set to press upwards, a small projecting flat on the upper surface acting as a catch against the side of the body and holding the cut-off open or shut. In the shut position the cut-off holds down the cartridges in the magazine out of the path of the bolt and acts as a platform for single loading. The hole in the rear of the cut-off is for convenience in manufacture only. In the Mark III* rifle there is no cut-off. In none of the marks is any provision made to indicate that the magazine is empty, as is provided in the Springfield rifle and in some Continental arms.

The trigger guard is attached to the body by a screw (*33*) passing up through a collar (*34*) let

into the fore-end in front of the magazine, and by a small transverse screw (*35*) passing through ears on the bottom of the socket of the body.

The barrel which screws into the body in the usual manner is strongly reinforced at the breech end, which is formed into a flat on its upper surface known as the Nock's or "Knox" form (*36*), from an old-time gun maker named Nock, who first devised this method of insuring the correct breeching up of barrel to body necessary to bring the sights vertical. It is 25.1 inches long overall and weights 2 pounds 2½ ounces. This is the lightest barrel used in any service arm.

The rifling is of the Enfield figure, with five grooves of .0065 inch mean depth. The width of the lands between the grooves is .0936 inch. The twist of the rifling is one turn in 10 inches, left-hand. The left-handed twist was originally adopted in order to compensate for the drift due to the rotation of the earth in the Northern hemisphere. It also has the effect of twisting the butt of the rifle away from the firer's cheek instead of against it.

The foresight (*37*) is of the "blade" pattern and consists of a plate dovetailed into the foresight block (*38*) at right angles to the axis of the barrel. It is capable of lateral adjustment. The foresight block is formed with a band which fits the barrel and is kept in position by a key and cross-pin. It is set approximately .015 inch left to counteract the lateral throw of the rifle due to vibrations set up on firing. The backsight (*39*) is attached to a bed (*40*) which encircles the barrel, to which it is fixed by a cross-pin in the middle. It is also supported by the sight-spring screw. The sides of the bed are raised to form a ramp (*41*). The leaf (*42*) is a solid piece of steel pivoted to the bed in front and kept in position by a spring fitted into the bed. It can be turned over on to the hand guard and rebounds into correct position when it is brought past the vertical. It is graduated from 200 to 2,000 yards. On the top left side of the leaf are lines representing every 25 yards. On the top right side the lines represent every 100 yards. The odd figures from 300 to 1,900 yards are omitted. A slide (*43*) fitted with a spring catch and a fine adjustment worm-wheel (*44*) enables the sight to be set at any elevation. The right side of the leaf is cut with screw-thread notches, and in these the fine adjustment is released, and the slide may be moved quickly along the leaf by the action of the thumb only. The periphery of the worm-wheel is divided by 10 thumbnail notches, the distance between each notch representing 5 yards in range, *i.e.*, 5 notches equal 25 yards, or one division on the left side of the leaf. One complete revolution of the fine-adjustment worm-wheel moves the slide 50 yards.

A wind gauge was originally fitted on the rear end of the leaf, but has been discarded. It was held in position by the wind-gauge screw. The scale was marked in divisions representing 6 inches' deflection on the target at 100 yards. Each quarter-turn of the wind-gauge screw represented 1 inch of deflection for every 100 yards of range at which the sight was set. At each quarter-turn a friction spring engaged in a nick inside the head of the screw, checking its rotation. A U-shaped notch was cut in the top edge of the slide, and the face was roughed to prevent the reflection of light.

In the Mark III* and in the later Mark III rifle there is no wind gauge. Its place is taken by a cap which is attached to the leaf by means of a screw. It is provided with a U-notch and roughened on the face. There are two patterns of backsight caps which differ slightly in form.

Long-range sights were provided in the earlier Mark III giving elevations from 1,700 to 2,800 yards. The backsight consisted of an aperture attached to the left side of the body. It was carried on a bar terminating at the upper end in a cup-shaped button through which a peep-hole was bored. It was pivoted on the stem of the locking bolt and kept in position by a spring. The foresight, known as the dial sight, was attached to the left side of the fore-end, and consisted of a dial on which the ranges were marked, a pointer, and a bead which acted as a foresight.

No long-range sights are fitted to the Mark III* rifle or to the later Mark III.

The stock is in two pieces. The fore-end (*45*) is held to the barrel by a nose cap (*46*) and outer band (*47*), which are fitted with swivels. The swivel of the nose cap is a piling swivel, *i.e.*, cut away in the center. A swivel is also fitted on the butt. Naval-service swivels are made slightly larger than for land service. The barrel being comparatively light, accuracy is liable to be detrimentally affected by a badly fitting fore-end. In the assembled rifle there are three important metal-on-wood bearing points where even bearings must be insured. They are as follows:

(1) The thrust of recoil is received by the stock, through the medium of the rear lugs on the body, on the resistance shoulders formed a little in front of its rear end. It is essential that the thrust should be taken up evenly on both sides.

(2) The barrel must be held firmly down on the fore-end at the reinforce. This is effected by the fore-trigger-guard screw, which is

fitted with a collar which limits the amount of "crush" which can be obtained on the wood by tightening. It must be noted that in the case of a shrunk fore-end there is a danger of the screw being screwed up tightly against the collar without pulling the barrel down tightly on the fore-end. Careful fitting is therefore necessary. It is also important to remember that, since the trigger is mounted on the trigger guard, a loose fore-trigger-guard screw may affect the "pull-off" of the rifle by allowing the front end of the trigger guard to drop, and thus slightly affecting the relative positions of the trigger and the tail of the sear.

(3) The barrel is caused to bear lightly on the woodwork ½ inch in rear of the inner band (48) by means of a spring acting through the medium of the latter.

Between (2) and (3) the woodwork is hollowed out so as to be clear of the barrel, and from the inner band forwards the barrel is held away from the fore-end by the fore-end spring stud, the hole in the nose cap being slightly oval in form to give the necessary clearance.

The foregoing is a brief description of the service stocking. For match shooting under N. R. A.* conditions, with private rifles, certain other methods have been evolved. These other methods have for their object the increased weight of the barrel and the damping of the vibrations set up on firing in order to attain a relatively high standard of accuracy for the special conditions of target shooting. They consist, briefly, in adopting some means of packing the barrel between the fore-end and fore-hand guard. The service stocking was evolved with the object of insuring a consistently satisfactory standard of accuracy under service conditions.

A backsight protector formed with two upstanding ears, roughened on top so as not to reflect the light, is let into the fore-end and secured by a vertical screw and nut.

The nose cap completely encircles the barrel at the muzzle and is provided with a tang which projects backwards under the fore-end and carries the piling swivel at its rear end. Immediately in front of the piling swivel is a sword bar for the attachment of the pommel of the bayonet, and in front below the muzzle is a boss on which the ring of the bayonet cross-piece fits. The sword bayonet is thus fixed underneath the rifle to the nose cap only, and does not touch the barrel. The nose cap is provided with high wings roughened on top, which protect the foresight. It is pierced on either side beneath the wings for lightness.

The hand guard (*49*) extends the full length of the barrel and is divided into two parts by a saw-cut opposite the backsight bed. This is for convenience in fitting and removing.

The rear portion fits over the barrel and is held in position by means of a spring riveted on to it. The front end of the hand guard is strengthened by a sheet-steel cap which fits under a recess in the nose-cap. A groove is cut in the correct position for the jointed outer band, a slot being formed to give clearance to the hinge. The hand guard does not touch the barrel, as the groove is of greater diameter than the barrel. An inner band is carried permanently on the barrel; it is grooved out so as to touch the barrel in two places, and is fixed in the groove of the fore-end in rear of the lower band by means of a screw, the head of which bears against a strong spiral spring.

The butt is attached to the socket on the action body by means of a stock bolt (*20*) that is inserted through a hole drilled longitudinally from the butt end. It is made in three ordinary lengths, long and short butts being marked by the letter L or S stamped on the wood on the top of the butt. For special use during the Great War, butts shorter than the ordinary short butt were made. These were termed "bantams" and stamped with the letter "B."

The butt plate is of brass, forgeable alloy or malleable iron. It is finished polished or zinc electroplated, according to the materials employed in manufacture. It is fitted with a trap for the insertion of oil bottle and pull-through. A marking disc is fixed with a screw to the right side. The "grip" is of a special "semi-pistol" shape.

The rifle, short, magazine, Lee Enfield Mark V was an improvement on the Mark III, but altho a certain number were produced in 1925 none were issued, and it was later discarded in favor of the more fully developed Mark VI. The Mark V differed from the Mark III in several particulars, the chief of which were (1) the adoption of an aperture backsight located on a specially-designed bed on the body behind the bridge charger-guide; (2) the making of the hand guard in one piece completely covering the barrel. The Mark VI is the outcome of experiment, since the Great War, but as yet has not been produced in quantity.

*National Rifle Association of Great Britain.

CHAPTER XXIX

Glossary of Chemicals and Substances

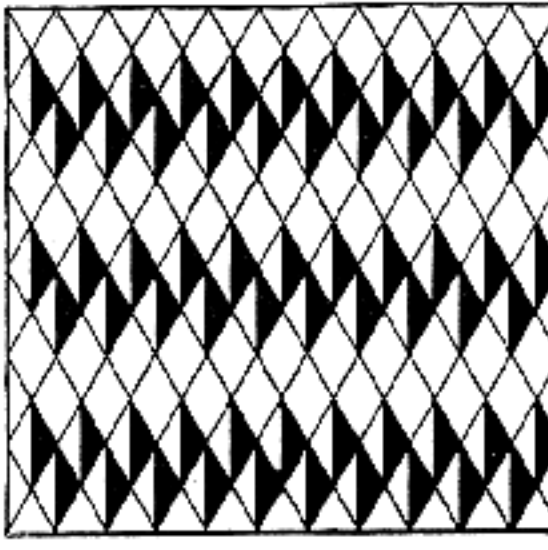

CHAPTER XXIX

Glossary of Chemicals and Substances

INASMUCH as chemistry plays an important part in the manufacture of ammunition and firearms, some elementary information on this subject will be helpful for the student who wishes a general understanding of what is necessary in compounding various acids for browning or bluing, and in the handling of other substances used in the building of a firearm. With a definite understanding of the names of chemicals and the formulæ given in other chapters, he will be able to carry his experiments to any desired length. It is much like the glossary of mechanical terms used by gunmakers—a separate book could be written on the subject—but with this as a foundation, the reader will find a world of facts suited to the many needs that may arise in the course of his gun work.

Acids—

Acetic Acid—A colorless pungent liquid, usually obtained by the destructive distillation of wood, or by the oxidization of alcohol with ferments. The acetic acid of commerce is an aqueous solution containing 33 to 36 per cent of glacial (pure) acetic acid. Vinegar contains 4 to 12 per cent.

Boracic Acid—A colorless crystalline compound, obtained largely in volcanic lagoons of Tuscany, Italy, and found in chemical combinations such as borax.

Carbolic Acid—A white crystalline deliquescent compound with a burning taste, and an odor resembling that of creosote; contained in the heavy oil of tar from which it is distilled. It is a caustic poison. Known also as phenol.

Gallic Acid—Acid produced in yellowish-colored crystals, derived from nut galls or oak apples. Soluble in water and alcohol. Nut galls are an important ingredient in the manufacture of good black ink.

Hydrochloric Acid—Known in commerce as muriatic acid. The only known compound of chlorin and hydrogen. Obtained when equal quantities of chlorin and hydrogen are mixed and exposed to the diffused light of day. The gases combine and form an unaltered volume of hydrochloric-acid gas. The acid may, however, be more easily prepared by heating sodium chlorid (common table salt) and sulfuric acid in a flask. This acid is a colorless gas, 1.269 times heavier than air; it fumes strongly in damp air, combining with the moisture, and has a strong acid reaction. It is very soluble in water, one volume of the acid at 15 degrees dissolving 454 volumes of the gas. This solution is the ordinary hydrochloric or muriatic acid of commerce.

Hydrofluoric or Fluoric Acid—Used to etch glass. The gas and solution are dangerous substances. The gas is poisonous, and the acid, if dropped on the skin, produces severe burns. Keep in wax or bakelite bottles.

Muriatic Acid—So called because it was formerly thought to be an oxid of an unknown element, murium. Also called hydrochloric acid.

Nitric Acid—Formed by the action of sulfuric acid on nitrates and other means. The pure acid is a colorless, fuming, corrosive liquid. Ordinary commercial nitric acid is yellowish in color. This acid is very active, dissociating very readily in water, and also having strong oxidizing qualities. It attacks most metals and certain other elements. It yellows and corrodes various organic compounds. Known also as aqua fortis, or strong water. Used to etch metal.

Oxalic Acid—A white crystalline poisonous compound found extensively in the vegetable kingdom; also made by the decomposition of sugar, etc., with nitric acid. Also called salts of lemon.

Picric Acid—A yellow crystalline compound obtained by the action of nitric acid on phenol, and by other means.

Pyrogallic Acid—Obtained from gallic acid by heat.

Salicylic Acid—A white crystalline compound contained in many plants, and also made from phenol.

Sulfuric Acid—A colorless, very corrosive, oily liquid compound. Originally made by distilling iron sulfate (green vitriol), hence its name, oil of vitriol. It is the most important acid used in the arts. Do not confound it with sulfurous acid (sulfur dioxid), which is simply the fumes of burning sulfur combined with the oxygen of the air. The burning brimstone match gives forth sulfurous acid.

Tartaric Acid—A colorless crystalline compound occurring largely in the vegetable kingdom, either as a potassium or calcium salt. Usually prepared commercially from argol, which is the crude tartar found at the bottom of wine casks.

Acetone—An inflammable liquid with a biting taste, obtained by the destructive distillation of certain acetates, citric acid, starch, sugar or gum. Used in making chloroform; a solvent for fats, camphor and resins, and powder residue.

Alcohol—

Ethyl—Grain alcohol. Obtained by fermentation and distillation of rye, wheat, etc.

Methyl—Wood alcohol, wood spirits, carbinol; distilled from wood.

Denatured—The addition of 10 per cent wood alcohol "denatures" it according to law. For general commercial use benzine is added, the first-mentioned article being allowed to manufacturers of varnish, etc., only under special permit. Hence, denatured commercial alcohol is not so desirable for many uses that a wood finisher finds for alcohol, owing to the presence of the benzine. In Great Britain, denatured alcohol is known as methylated spirits.

Absolute—Absolute alcohol is that which is entirely free of water, a condition not obtainable by ordinary distillation, and effected only by the use of some dehydrating substance such as quicklime. Commercial absolute alcohol contains about 1 per cent of water and is used only for special purposes. As used in the U. S. Pharmacopœia, alcohol means a solution of 91 per cent by weight of ethyl alcohol and 9 per cent of water.

Proof Spirit—Or dilute alcohol: 45.5 per cent by weight of alcohol, 54.5 per cent of water.

Amyl—Amyl alcohol is the principal constituent of fusel oil, etc.

Alizarine—An orange-red crystalline compound formerly obtained from the madder plant, but now made from the coal-tar product, anthracene.

Alkali—Anything that will neutralize an acid; for example, lime, magnesia, ammonia, soda, potash.

Alkanet Root—The root of a species of bugloss. It gives a fine red color to alcohol and oils, but a dirty red to water. Used very successfully when mixed with linseed oil to darken light woods.

Aloes—An intensely bitter resinous substance consisting of the inspissated juices of the leaves of several species of aloes.

Alum—Sulfate of potash and aluminum. Potash alum.

Ammonia—A colorless gaseous compound of hydrogen and nitrogen. Aqua ammonia or ammonia water is a solution of gaseous anhydrous ammonia in water. It should contain 10 per cent of the gas by weight; the "stronger ammonia," 28 per cent. Ammonia is very soluble in water, liquefiable and solidifiable by cold and pressure; it is strongly alkaline and combines readily with acids to form ammonia salts.

Ammonia Persulfate—Comes in a powder form and when mixed with ammonia and distilled water makes a very good cleaning solution, especially for dissolving metal fouling.

Ammonium—

Phosphate—A combination of ammonia and phosphoric acid.

Sulfate—A salt formed by the union of ammonia and sulfuric acid.

Chlorid—Sal ammoniac.

Carbonate—A variable mixture of ammonium bicarbonate and ammonium carbamate.

Annato—Also spelled anotta, arnotta, and annotto. A red coloring substance obtained from the pulp of the seed vessel of the plant bixaorellana. It dissolves in alcohol and can be used to darken light woods.

Anilin—An oily poisonous basic liquid, colorless when pure; now chiefly made by the reduction of nitrobenzine. It may be regarded as ammonia in which one hydrogen atom has been replaced by the radical phenyl. In commercial language anilin (or anilin oil) for blue, signifies pure anilin; anilin for red, a mixture of anilin and o- and p-toluilin; and anilin for safranin, anilin containing o-toluidin.

Antimony Trichlorid—Butter of antimony. A compound obtained as a soft, white, fuming crystalline mass by dissolving antimony trisulphid in hydrochloric acid and distilling. Butter of antimony enters into most formulas for furniture polish, because it is a good cleanser, not affecting the luster. It is highly corrosive.

Aqua Regia—Meaning "royal water." Certain metals such as gold and platinum, and many metallic compounds such as certain sulfids which do not dissolve in either nitric or hydrochloric acid separately are readily soluble in a mixture of these two acids, especially upon warming.

Arsenic—White and red arsenic are used in coloring.

Arsenic Chlorid—Also used in the ingredients to color brass, copper, etc.

Barium Chlorid—A salt obtained by fusing barite, a native sulfate of barium, with calcium chlorid.

Barytes—Sulfate of baryta. Most important of the salts of barium. Barytes is commonly known as heavy spar.

Benzene—Obtained by distillation from petroleum.

Benzoin Gum, or Gum Benjamin—A gum extracted from the tree, styrax benzoin, which grows in the East Indies. It fuses at a gentle heat. Can be dissolved in alcohol and employed as a varnish to take the place of white shellac in finishing. It gives an agreeable odor when warmed by the heat of the hands.

Bismuth Chlorid—Used to color metals when mixed in proportions of other ingredients.

Bismuth Oxychlorid—A metallic salt used in certain bluing solutions.

Blue Vitriol—Sulfate of copper, also called blue stone. A salt formed by sulfate acid in combination with copper. It is soluble in cold or warm water. Used in bluing solutions and for coating steel when mixed with sulfuric acid to give a copper appearance to the surface.

Bone-black—Animal charcoal or bone-black is made by heating bones and animal refuse in a closed vessel. Used to coat work where fine points are exposed in hardening.

Brazilwood—A number of tropical American trees yield dyes such as the sapanwood, peachwood, limawood, camwood, barwood, brazilwood, and red sanders or sandalwood. These produce red or purple dyes.

Brunoleine—A preparation used to give the appearance of age to oak, or to make imitation old oak. To make it, boil 7 parts linseed oil with 2 parts litharge and 2 parts red lead in a large kettle until the pale red liquid is converted into a thick brown mass which becomes solid when cold. Reduce this solid body into pieces; pour 16 parts of turpentine over it and dissolve by stirring or by the use of heat. This is filtered through linen, and the clear liquid obtained is mixed with 3 parts of wax turpentine solution. If necessary, color with a solution of asphaltum in turpentine for a lively brown tone.

Campeachy Extract—Logwood extract.

Camphor—A solid concrete substance. Laurus camphor or Indian laurel tree grows in the East Indies, China, Japan and the Island of Sumatra. This substance dissolves in alcohol, ether, oil, and acetic acid. Used in making sulfur casts, etc.

Catechu—That mostly used is called Bengal catechu and is an extract of the wood of either of two East Indian acacias. Gambier catechu is from an East Indian shrub. Cutch is from several tropical Asiatic plants. The wood, leaves, or fruits are used in obtaining the coloring matter, by decoction and evaporation.

Carbon Disulphid—A clear liquid which, when not perfectly pure, has a very offensive odor. Dissolves rubber, etc.

Carbonate of—

Magnesia—The white magnesia is a varying mixture of carbonate and hydrate, made by precipitating a hot solution of magnesium sulfate with sodium carbonate.

Potash—Commercially known as pearlash and potash.

Soda—Known in commerce as soda ash. Made on a large scale from sea salt.

Carmine—There are several carmines. Made from the cochineal insect. Carmine lake is made from carmine and alum. Indigo carmine is of the same class.

Caustic Soda—Sodium hydroxid. Made by boiling lime and carbonate of soda together with water and evaporating down the clear solution.

Charcoal—Used when powdered to blue small parts, willow charcoal being the best. Also used in the making of black powder.

China-wood Oil—Tung oil. Described at some length in Chapter XII, Volume I.

Chlorid of Lime—Calcium chlorid. A mixture of calcium and calcium hypochlorite; bleaching powder.

Chlorid of Sulfur—Sulfuryl chlorid. A colorless, slightly fuming liquid, obtained by direct union of sulfur dioxid and chlorin by sunlight and otherwise. Treated with water, it decomposes, forming sulfuric chloranhydrid.

Coconut Oil—Used in the mixture of oils such as sperm, etc.

Collodium—Collodion. A viscous liquid consisting of a mixture of alcohol and ether in which soluble guncotton or pyroxyllin is dissolved. On evaporation of the solvents, the pyroxyllin remains in a tough adhesive form, in which condition it is used for photograph films, etc.

Copal—The concrete juice of a tree growing in South America and the East Indies. Strictly speaking, it is not a gum or a resin, but rather resembles amber. It may be dissolved in linseed oils with heat a little less than sufficient to boil the oil. The solution diluted with oil of turpentine forms a transparent varnish used on some forms of stock work.

Copperas—Sulfate of iron or green vitriol. A salt made by decomposition of iron or iron pyrites in oil of vitriol, dissolved in water and other ingredients. The basis of some bluing solutions.

Corrosive Sublimate—Or bichlorid of mercury. Made by the action of chloroform and quicksilver, forming a deadly white powder. Used in most bluing solutions.

Creosote—An oil liquid, colorless when pure, but usually colored yellow or brown by impurities or exposure. It is obtained by the distillation of wood tar, especially that of beechwood. A similar substance is obtained from coal tar. Creosote is obtained from creosote oil by purification.

Cupric Chlorid—Chlorid of copper. Formed when copper is brought into chlorin gas, or when copper oxid is dissolved in hydrochloric acid; it forms green needle-shaped crystals, soluble in water and alcohol. Used in bluing solution.

Cupric Sulfate—Sulfate of copper, blue vitriol, bluestone. Largely made by dissolving copper oxid in sulfuric acid. It crystallizes in large blue crystals.

Cyanid Chlorid—A white substance which is produced in moulds and also powder. Highly poisonous. Used in case-hardening.

Dammar—A resin obtained from various pinaceous trees of the genus dammara in Australia, New Zealand, and the East Indies. Dammar alba is from the Amboyna pine; dammar Australia is from the Kauri pine. Batavia dammar simply means that it came from the principal shipping point of that name. The so-called Batavia dammar is considered to represent the best.

Distilled Water—Use only the pure distilled water in all chemical mixtures.

Digest—To extract soluble substance, as from bark, etc., in alcohol; to soften by heat or moisture.

Dragon's Blood—The true dragon's blood of commerce is obtained from the Malayan rattan palm, from whose fruit the resin exudes. Socotrine dragon's blood, from the island of Socotra, is probably the "cinnabar" of the ancients. Used for tinting varnishes and staining wood and marble.

Epsom Salts—Magnesium sulfate. Obtained mainly from the mines at Kieserite. Formerly obtained by boiling down the mineral waters of Epsom, England.

Ether—Obtained by the distillation of alcohol with sulfuric acid, hence also known as sulfurous ether. A powerful solvent of fats, oils, resins, etc.

Ether, Nitric—Made by distilling equal parts of strong nitric acid and alcohol with a few grains of urea. It is a liquid; colorless, having a sweet taste and insoluble in water.

Ferric Chlorid—A brown salt used in bluing solutions.

Fusel Oil—An acrid, oily liquid of vile odor, accompanying the making of potato spirits, corn spirits, etc. It consists chiefly of amyl alcohol, hence is known also as amyl alcohol.

Fustic—A light yellow dye obtained from the wood of a tree growing in Mexico and West Indies.

Gamboge—An orange-red resin which becomes bright yellow when powdered. The best comes from Cambodia, Siam.

Glauber Salts—See sulfate of soda.

Glycerin—A sweet syrupy liquid, colorless, odorless, and obtained by the saponification of the neutral fats and oils, which are composed of glycerin with various acids. It is a by-product of soap and candle factories.

Gum—Any of a number of amorphous, tasteless substances, exuded in most cases by plants, and hardening on exposure to the air. Their chief constituents are certain carbohydrates, as arabic acid, bassorin, etc. Some (tree gums) form clear solutions with water, while others (vegetable mucilages) swell up in water into a glutinous mass. All are soluble in alcohol. They may be true secretions, or transformation products of cellulose, as in cherry gum, etc. Loosely, any of various plant exudations, including the gums proper, resins, gum resins, etc.

Gum resins are essentially a mixture of gum and resin, usually obtained by making an incision in a plant and allowing the juice which exudes to solidify by evaporation. Gum resins are, in accordance with their composition, partially soluble in alcohol. Some substances commonly called gums are gum resins; they usually originate as excretion products in special canals or glands. See also Resin.

Henna, Tincture of—From the leaves of a thorny tree or shrub of Asia there is obtained a reddish orange dye, called henna, or alhenna.

Indigo—Made artificially from naphthalene. Formerly made entirely from the indigo plant. The indigo coloring did not exist in the plant as such, but was obtained by decomposition of indican, which contains, besides indigo blue, various other substances unless specially purified.

Indigo Carmine—The sodium or potassium salt of indigo in disulfuric acid (indigo extract). Sold usually in the form of a paste.

Iron Acetone—A liquid formed by the action of acetic acid on iron filings.

Iron, Sesquichlorid of—Perchlorid of iron or permurate of iron. Made by dissolving rust of iron in hydrochloric acid, and then crystallizing. It forms red crystals. Soluble in water and alcohol. Very corrosive; used in bluing solutions.

Japan—A varnish used in Japan and obained by tapping a tree called the varnish tree. In the painting trade, japan means a drying agent. There are various kinds; brown is the kind generally used by house painters for adding to paint to assist its drying; of course there are several qualities or grades of brown japan. Black japan is really a black varnish used by coach painters. Coach japan is a good-quality drier used by coach painters. The color of a drying japan depends upon the siccative agent used and the amount of boiling the liquid receives. The dark japan is a quicker drier than the light tints. Japan gold size is light in color, but a strong drier. It all depends upon method of manufacture. For the wood finisher, the dark japans are usually the most useful.

Kilo—A prefix meaning thousand, used in forming names of units of measurement, as in kilogram, kilometer, kilowatt. A "kilo" is 2.2 pounds.

Lacquer—Nitrocellulose is an essential ingredient of special solutions called lacquers. These are extensively used for coating finished metal parts.

Lead Acetate—Sugar of lead. A drying agent, used in making "patent drier." A colorless or white crystal salt with a sweet astringent and metallic taste, made by dissolv-

ing lead in vinegar, and in other ways. It is an irritant poison.

Lime—A caustic, highly infusible substance, white when pure; obtained by burning limestone, oyster shells, etc. Known also as quicklime. Calcium oxid. Lime slaked with water is calcium hydroxid. Lime slaked in the air is carbonate of lime.

Linseed Oil—Made from crushed flaxseed; used on gun stocks. There are two kinds, the raw linseed oil and the boiled.

Litharge—A yellowish-red substance obtained by heating lead moderately in the presence of air, or by calcining lead nitrate or lead carbonate. Practically the same as red lead.

Logwood—The heartwood of a Central American tree. It is very hard, and of a brown or brownish red color. Imported in logs hence its name. Logwood chips and extract are used in dying. Barrels are sometimes boiled in logwood to produce a deep black after bluing.

Madder—A plant of the genus rubia, one species of which is used to dye red.

Magnesium Chlorid—A fusible salt obtained by evaporating magnesia dissolved in hydrochloric acid with an equal quantity of sal ammoniac; on fusion, the latter salt volatilizes, and the magnesium chlorid remains behind.

Malaxating—To soften by kneading, rubbing, mixing, or by stirring some thinner substance.

Manganate of Soda—A salt of manganic acid. Various manganates are formed as green masses by fusion of manganese dioxid with alkalies, oxids, or carbonates. Those of sodium (manganate of soda), of potassium (manganate of potash), and of barium are perhaps the best known.

Manganese, Sulfate of—A beautiful rose-colored salt, used to give a fine brown to woods.

Marble Dust—Simply crushed and pulverized limestone. Large quantities are used in making what is called "putty."

Mercury, Quicksilver—A fluid metal which congeals at about 40 degrees below zero Fahrenheit. Boils at 660 degrees, and forms a colorless dense vapor. It is used in barometers and thermometers, and in alloy with tin in coating mirrors. It unites with chloroform, forming calomel and corrosive sublimate. The only acids that act upon it are sulfuric and nitric. To make it unite with the latter, it must be heated. Used to remove lead fouling from rifle barrels, and to harden lead bullets.

Muriate of Iron—Called chlorid or iron. Made by dissolving iron chips in hydrochloric acid and crystallizing by evaporation, crystals of green color being the result. Used at times in bluing solutions.

Neat's-foot Oil—A pale yellowish fixed oil made by boiling the feet and shins of neat cattle. It consists almost wholly of olein and is used as a fine lubricant and leather dressing.

Nitrate of Silver—Made by dissolving silver in nitric acid and evaporating the solution to crystals. Will dissolve in warm water. It is used for indelible ink and photography. Also in the coloring of different metals when mixed with other ingredients. In contact with organic matter, it turns black.

Niter, Sweet Spirits of—A solution of nitrous ether. Contains a high percentage of alcohol. Used in bluing solutions.

Oil of Amber—Amber varnish.

Oxalate of Tin—An oxalate is an ester of salt of oxalic acid.

Ozokerite—Mineral wax. A waxy, translucent substance or natural paraffin, occurring usually in coal measures, sometimes in large quantities.

Paraffin—A wax produced in distilling wood, lignite, coal, etc., and occurring in the earth as ozokerite, either as a solid deposit or as a constituent of petroleum. Pure paraffin is white or colorless, odorless and without taste. Chemically, it is perfectly inert.

Pearlash—Carbonate of potash. An alkali obtained from the ashes of trees by leaching. When evaporated to dryness in iron kettles, it is called potash, but when calcined to burn off the coloring matter it is called pearlash.

Persian Berries—The dried berries of various European and Asiatic species of rhamnus, producing, with tin salts, a yellow lake.

Petroleum Ether—A term sometimes used to designate 62-degree benzene.

Phenol—A colorless or pinkish crystalline substance produced by the destructive distillation of wood, coal, etc., and from the heavy oil from coal tar. Its odor resembles that of creosote. Generally called carbolic acid.

Plaster of Paris—So called because originally brought from a suburb of Paris. Made from gypsum. When gypsum is moderately heated it loses its water, and becomes plaster of Paris. This, when moistened takes up two atoms of water again and sets to a solid mass.

Potash—Caustic potash. Potassium hydroxid. Prepared by boiling one part of carbonate of potash with 12 parts of water, adding slaked lime prepared from two to three parts of quicklime. In this reaction calcium carbonate (chalk) is formed, which falls to the bottom as a heavy powder, caustic potash remaining in solution. The clear liquid, which should not effervesce on addition of an acid, is evaporated in a silver basin to dryness, fused by exposure to a stronger heat, and cast into sticks in a metallic mold. This prepared caustic potash is a white substance soluble in half its weight of water, and is highly corrosive to the skin.

Potash, Prussiate of—There are the red and yellow prussiates, the latter being non-poisonous.

Potassium Bitartrate—Cream of tartar. Used to color metals.

Potassium Chlorate—Used in bluing formulas.

Potassium Chlorid—Used in different formulas.

Potassium Cyanid—Used for case-hardening.

Potassium Nitrate—Saltpeter. Used in coloring steel and in solutions.

Potassium Permanganate—Used to color woods, and for snake bite, etc.

Pumice—Pumice stone. A highly vesicular volcanic froth, which became stone upon cooling. The color is white, gray, yellowish, or brownish, but rarely red. The imported is best for rubbing with, being free from grit, from which the American article is not sufficiently free.

Quercitron Bark—The bark of a large timber oak of the Eastern United States, whose foliage resembles that of the red oak; its inner bark is yellow.

Resin—Any of various solid or semi-solid organic substances, chiefly of vegetable origin, yellowish to brown (usually), transparent or translucent, and soluble in ether, alcohol, etc., but not in water. Resins soften and melt on heating and burn with a smoky flame. Chemically they differ widely, but all are rich in carbon and hydrogen and also contain some oxygen. Many are oxidization products of the terpenes and are produced as exudates from plants either alone or as mixtures with essential oils (oleoresins), with gums (gum resins), etc., being chiefly excretion products. Some are obtained from alcoholic extracts by addition of water, and some are made artificially as by the action of caustic potash on aldehyde. The chief constituents of the natural resins are certain copals, dammar, guaiacum, lac, mastic, rosin, and sandarach.

Rosin—The residue from the turpentine still. Known

also as North Carolina copal. Its better name perhaps is colophony.

Rose Pink—Whiting dyed with a decoction of brazilwood and alum.

Rose Madder—An alumina lake of madder or alizarin, of a pale rose color.

Rottenstone—A friable siliceous stone, the residue of a siliceous limestone whose calcareous matter has been removed by the solvent action of water. Also called tripoli powder. Used for fine wood finishes.

Sal Ammoniac—Ammonia and its compounds are now obtained mainly from the ammonia liquors of gas works. Adding hydrochloric acid to the liquid and evaporating the solution produces the sal ammoniac of commerce. Quicklime and sal ammoniac give chlorid of lime. Used in soldering, etc.

Sal Soda—Washing soda. Sodium carbonate. Soda crystals. Carbonate of soda.

Salt—Table salt. Sal culinarius. Chlorid of soda. It is from this that almost all the other sodium compounds are prepared.

Sandarac—A resin that exudes from trees growing in Africa. Fusible by heat and soluble in alcohol. Used in varnishes.

Saturated Solution—When water has taken up all of a solid that it can hold in suspension, as of salt, for instance, it is said to be a saturated solution.

Savogran—A commercial cleanser containing certain alkaline substances.

Shellac—Lac is a resinous substance produced mainly from the banyan tree of the East Indies. It is also the product of an insect.

Silver Nitrate—Prepared in the form of small fusible stones like crystals, by dissolving silver in aqua fortis or nitric acid.

Soda—Sodium, a metal, silver white, and soft at ordinary temperatures. When thrown upon water it floats, and rapidly decomposes the water with disengagement of hydrogen, soda being formed. The compounds of sodium are very widely diffused; every particle of dust contains some; sea water contains nearly 3 per cent of sodium chlorid or common table salt. Sodium carbonate (see carbonate of soda) is made on a large scale from sea salt.

Soda Ash—Same as carbonate of soda.

Sodium Chlorid—Common table salt. See salt.

Sodium Bicarbonate—Bicarbonate of soda. Baking soda. Saleratus (aerated salt). Obtained by exposing the crystallized carbonate of soda in an atmosphere of carbonic acid gas. Heating will convert it again to the carbonate form.

Sodium Nitrate—Used in bluing solutions and other means of bluing steel.

Spermaceti—See Wax.

Spirits of Wine—See Alcohol.

Stannous Chlorid—Obtained by dissolving tin in hydrochloric acid; it separates in needle-shaped crystals, when the solution is concentrated. In commerce known as tin salts. Used in dyeing as a mordant.

Stearin—A constituent of many animal and vegetable fats and oils. Tallow owes its firmness to the presence of stearin. Olein is the liquid or oily part, and stearin the solid part of oil or fat.

Steatite—Soapstone, a variety of talc.

Stick Lac—The resin in its natural state; seed lac when broken up, cleaned of impurities and washed; shellac when it is melted and formed in thin flakes. United with ivory black, or vermilion, it makes sealing wax. Dissolved in alcohol it makes lacquers and varnishes.

Sulfate of Copper—Blue vitriol. Bluestone is the common name, as it comes in large blue crystals. Made by dissolving copper oxid in sulfuric acid.

Sulfate of Hydrogen—Hydrogen sulfate, known in commerce as brown oil of vitriol. Thick oily liquid, combining with water with great force, and used in the laboratory as a drying agent, as it absorbs moisture rapidly from the air. Great heat is evolved when this acid is mixed with water, and care must be taken to bring the two together gradually, otherwise an explosive combination may ensue. Many organic bodies, such as woody fiber and sugar, are completely decomposed and charred by strong sulfuric acid.

Sulfate of Soda—Glauber's salts is the commercial term.

Sulfate of Zinc—Used to color metals, etc.

Sulfur—A mineral of yellowish color, often called brimstone. Soluble in turpentine, fat oils, bisulfuret of carbon, and hot liquor of potassa. With oxygen it forms sulfuric acid and sulfuret acid, and with the metals it combines as sulfurets or sulfides. It is an essential ingredient in the making of black powder. Used in tempering oils for springs and sulfur casts.

Sweet Oil—Oil from the olive.

Talc—A soft mineral of a soapy feel; usually whitish, greenish, or grayish in color. Soapstone and French chalk are varieties of talc. Talcum powder is a toilet article composed of powdered talc and a perfume.

Tannin—Chemically, tannic acid.

Tartar, Salt of—Potassium carbonate, an especially pure form, is made by heating cream of tartar. Cream of tartar is purified tartar. Chemically it is acid potassium tartrate, or potassium bitartrate. Tartar is the crystalline sediment of wine casks.

Tea—Used to age ivory.

Tincture—The finer and more soluble parts of a substance separated by a solvent.

Tincture of Ferric Chlorid—"Tincture of iron" used in bluing solutions.

Turmeric—A vegetable dye, a yellow, and there may be used in its stead, answering the same purpose, Persian berries or quercitron bark.

Turpentine—An olio-resinous substance flowing from several species of pine, larch, and fir trees. Oil of turpentine is obtained by distilling the crude turpentine.

Verdigris—Copper acetate. A dark green salt, poisonous. Obtained by action of acetic acid on copper. Formerly used in paint, but besides being poisonous, it was liable to fade, blacken, and react with other substances.

Water Bath—To prevent the overheating or burning of a substance that is to be boiled, it is placed in a vessel which is placed within a second vessel containing water, and the water, upon heating or boiling, heats the first vessel's contents sufficiently and without endangering it from overheating.

Water Glass—Soluble glass. Silicate of soda. Silicate of potash. A substance consisting of silica which has been liquefied by extreme heat and pressure, in connection with potash or soda, potash giving potassium silicate, and soda sodium silicate, the latter being the more generally used by painters. It is a sirupy liquid, soluble in water.

Wax—Beeswax is secreted by the bee, and used in the making of the honeycomb. A dull yellow solid wax of agreeable odor; melts at 142 to 148 degrees Fahrenheit. Can be purified and bleached white, in which condition it is tasteless, odorless, and somewhat brittle. Insoluble in water, partially soluble in boiling alcohol, and miscible in all proportions with fats and oils (turpentine of course). Used to a large extent in finishing oils for stocks, and coating surfaces of metals for etching. Carnauba wax is obtained from

the Brazil wax. It is yellow in color and brittle. Used in making candles. Ceresin wax is an amorphous substance, the insoluble part of cherry gum. Japan wax is obtained from the Japan wax tree, a Japanese sumac. A fragrant green wax from the bayberry or wax myrtle is called myrtle wax. Paraffin wax—see Paraffin. Spermaceti is a yellowish or white wax, solid, obtained from the oil of the sperm whale.

Whiting—Calcium carbonate. There are various forms: crude, commercial, gilder's bolted, English cliffstone, Paris white, Spanish white. All whitings are made from chalk, but differ in grade or quality, according to amount of preparation in the making.

Woad—A coloring matter from the woad plant, isatis tinctoria, resembling indigo, consisting of the powdered and fermented leaves of the plant. Its essential constituent, indigotin, is identical with that of indigo, which has largely superseded it in dyeing.

Zinc Chlorid—Chlorid of zinc. A white soluble deliquescent substance formed by burning zinc in chlorid, or by dissolving zinc in hydrochloric acid.

Zinc Sulfate—A soluble salt, crystallizing in long prisms, and commonly called white vitriol.

INDEX

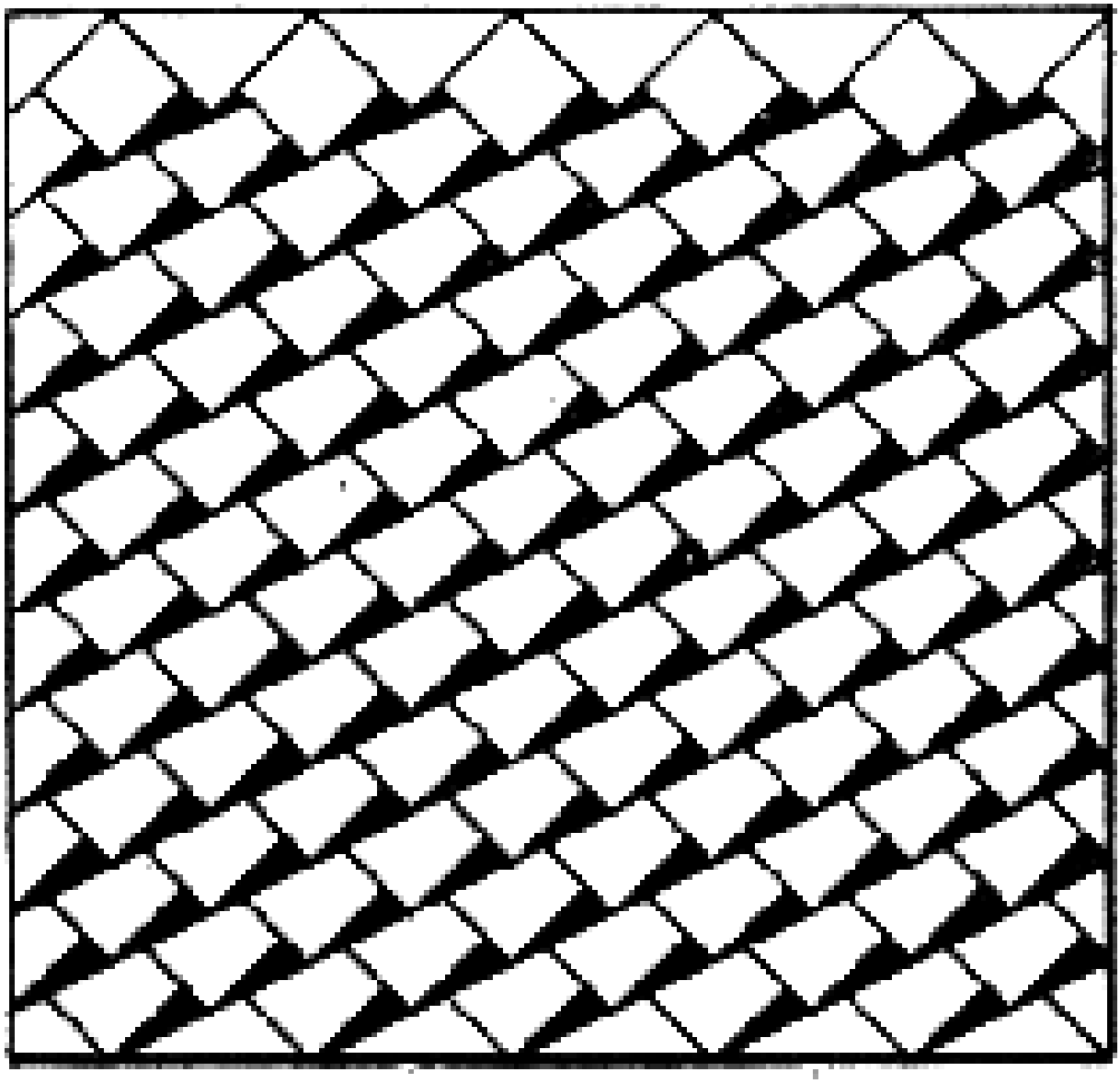

INDEX

NOTE—*All page numbers after I in each paragraph will be found in Volume I, all after II in Volume II.*

A

Abbreviations used in weights and measures, II, 223.
Acetone, for cleaning, I, 44.
Acids, various kinds used, I, 44; described, II, 411.
Action, inletting the, I, 123-139; bedding in the stock, 159-161; preference for bolt, 219; alterations in Winchester, 336; in Martini, 337; methods of stripping, 323-329; bolt-action rifles, 323; to dismount a bolt, 325-326; to assemble a bolt, 326; disassembling and reassembling a shotgun action, 326-329; working on single triggers, 329; on automatic ejectors, 329; definition of, 383, 411; loose, how to cure, II, 343; straight-pull in rifles, 396.
Addresses of dealers in gunsmithing supplies, I, 419-424.
Aiming, correct method of, II, 353.
Alcohol, uses of, I, 44; various kinds described, II, 411.
Alkanet root, how used, I, 44.
Almond wood, I, 86.
Amboyan wood, I, 86.
Ammonia, uses of, I, 44; in etching, 313.
Ammunition for small arms, I, 375; cartridge cases, 376-385; primer pockets, 377; manufacture of, 366-392; case hardness, 393; bullet experimental factors, 394; bullet weight, 398; expanding bullets, 398; bullet design, 399; National Match bullets, 404; designs of the future, 406; best types of, II, 76; high-power, in Hornet cartridge, 179-188.
Angle plate, how to make, I, 10.
Annealing, process of, I, 266; methods of, II, 90-91.
Antique firearms, restoration of, II, 319-334.
Anvil, proper size of, I, 10; how to select, 64.
Apple wood, I, 86.
Arasake rifle, I, 225.
Arbor press, use of I, 11.
Arbors, how to make, I, 11; further details on construction, II, 48; making lapping arbors, 52.
Ash wood, curly, I, 88.
Automatic arms, I, 378.
Avoirdupois weight, table of, II, 222.

B

Balance, in a rifle, I, 106-109.
Barium chlorid bath, for steel, II, 90.
Barrel-cleaning tools, how to make, II, 23-27.
Barrels, how to bed in the stock, I, 159-161; definition of, 383, 411; dealers in gun barrels, 419; barrel design and fitting, II, 103-116; barrel steels, 104-106; standard barrel design, 106-110; turning barrels, 110, 112; chambers and fitting, 114; ribbed barrels, 115; bullet fit in barrels, 115; rebored barrels, 116; barrel tools and their construction, 119-142; barrel drilling and reaming, 145-153; straightening, 148-152; reaming, 152-153; rebored barrel, 162-163; heat-treatment of, 163-164; barrel turning, chambering and headspacing, 169-176; threading and fitting barrels, 172; barrel steel for Hornet cartridge, 179; relining a barrel, 191-194; best method of "striking" and polishing, 197-206; draw-filing, 200; draw-finishing with emery cloth, 201; power polishing, 201; problems of polishing, 203-205; cleaning and removing obstructions from, 227-237; bases for swivels on, 263; barrel bands, 264; collars, 267; making repairs on barrels, 344-346; removing dents from, 346-348; making special ribs for, 348-351; resoldering ribs, 351; length of in military rifles, 402.
Bedd wood, I, 87.
Beech wood, I, 87.
Beef wood, I, 86.
Beeswax, uses of, I, 46.
Bench, making your own, I, 9; bench plate, 11; bench tops, 11; bench horse, use of, 35.
Benteak wood, I, 87.
Bevel protractor, use of, I, 11; choice of, II, 38.
Big game, cartridges suitable for, I, 375.
Birch wood, I, 87.
Bits, auger, Forstner, etc., I, 11, 52.
Blackbean wood, I, 87.
Blacksmith equipment, I, 261.
Blackwood, African, I, 87.
Bluing and browning steel, the art of, II, 209-223; chemicals required, 209; formulas for bluing solutions, 211-214; formulas for browning solutions, 214-216; miscellaneous formulas, 216-221.
Boat-tailed bullet, advantages of, I, 375, 376, 395, 396.
Bolt, definition of, I, 383, 411; bolt-action rifles, preference for, 219; disassembling, 323; bolt-bending fixture, how to make, II, 31.
Bone-black, how used, I, 46.
Bore, definition of, I, 383, 411; measuring a, II, 158; cleaning and removing obstructions from, 227-237; choke, how to make, 338-342.
Bottoming, tools for, I, 14, 34.
Braces, choosing, I, 11; gun, how made, 35.
Brass, how to purchase, I, 42; formulas for etching on, II, 218-221.
Brazing, heat required for, I, 355; brazing cast-iron, formula for, 359.
Breech blocks, brushing of, II, 182.
Brinell hardness table, I, 394; hardness test, II, 99.
British service rifles, various "marks" described, II, 402-408.
Bronze, formula for etching of, II, 218.
Browning solutions, formulas for, II, 214-216.
Brush, scratch, I, 22.
Buffing wheel, use of in polishing, I, 174; buffing and polishing compositions, II, 202.
Bullet-drilling fixture, how to make, II, 32; bullet-resizing dies, 299; bullet swages, 301.
Bullets, different types of, I, 375; weight of, 383; bullet experimental factors, 394; boat-tailed bullet, 375, 376, 395, 396; bullet weight, 398; expanding bullets, 398; bullet design, 399-400; armor-piercing bullets, 401; incendiary bullets, 402; National Match bullets, 404; designs of the future, 406; fit of in barrels, II, 115; modern method of making, 301-303; bullet moulds, various kinds of, 307-315; ball cherry, how to use, 307; bullet cherry, 310; simple form of cherry, 311; bullet moulds, how to make, 311-314; material for casting bullets, 314.
Bunsen burner, use of, I, 11, 63.

Butt plate, fitting the, I, 145; buffalo horn for, 146; trap butt plate, 146; plain steel, 147 checkering the, 189; dies for making, II, 66; where best are made, 259.
Butt stock designs, I, 109.

C

Caliber, definition of, I, 383, 412.
Calipers, inside and outside, I, 11.
Camphor, how used, I, 44.
Camp Perry, Ohio, meets held at, II, 71.
Care of firearms, I, 367-371; also II, 227-237; cleaning the bore, II, 228; cleaning rods, sizes of, 229; use of powder solvents and metal-fouling solutions, 230; cleaning the neglected rifle bore, 231; cleaning shotgun barrels, 232; removing obstructions from the barrel, 233; mercury treatment for lead fouling, 234; obstructions in shotgun barrels, 235; chamber obstructions, 236; cleaning and repair kits, 236.
Cartridges, kinds now made, I, 375; case designs, 378; primer pockets, 377; cases, manufacture of, 385; factory layout, 386; processes and machines used, 387-392; case hardness, 393; bullet experimental factors, 394; bullet weight, 398; expanding bullets, 398; bullet design, 399.
Cartridge clips, dies for making, II, 65.
Carving, tools for, I, 14; tools and methods, 190-192.
Case-hardening, principles of, I, 266; methods of, II, 97-98.
Cast-off and cast-on, I, 106.
Casts, sulfur, formula for, I, 345-346.
Chambering rifle barrels, details of, II, 172-176; chambering the .22 caliber Hornet, 184-188.
Chambers, fitting in rifles, II, 114; lapping out, 247; removing obstructions from, 236; in over-and-under guns, 374.
Charcoal, uses of, I, 46.
Checkering, making tools for, I, 11; stand and cradle for, 29-31; tools for, 31; cradle, how to make, II, 21-23.
Checkering, carving, and inlays, directions for, I, 179-197; frame or cradle for checkering, 184; checkering forearm and grip, 186; border design, 187; checkering metal parts, 281.
Cheek pieces, desirability of, I, 110.
Chemicals and other substances used by the gunsmith, II, 411-416.
Cherry, used to make bullet moulds, II, 307-315.
Cherry wood, I, 87, 88.
Chisels, various kinds of, I, 13-14; how to make, 33-34; how to use, 49-50.
Clamps, most useful kinds of, I, 14; how to make, 37.
Cleaning fouled barrels, II, 227-237; cleaning-rods, sizes of, 228; solutions for, 230; pitted rifle bores, 231; cleaning shotgun barrels, 232; removing obstructions, 233-237.
Clip, definition of, I, 383.
Clip hand guard, dies for making, II, 63.
Cocobolo wood, I, 88.
Colors or dyes, where they come from, I, 350-351.
Colt revolver, I, 266, 271, 275, 277, 278, 279, 280, 281, 283, 287, 295, 296.
Comb, difficulty of design, I, 111; how to insert, 203; Monte Carlo effect, 204.
Copper, uses of, I, 42.
Coppering solutions, formulas for, II, 218.
Counterbores, how to make, I, 21; further details, II, 44-45; making barrel counterbores, 142.
Countersinks, kinds used, I, 14.
Craftsmanship, appraisal of, II, 371-378.
Crocus cloth, use of, I, 43.
Crossman, Captain, *The Book of the Springfield*, I, 246.
Cube block, how to make, II, 38-40.
Cutters, fishtail, how to make, II, 45; angle and T-slot, 46; formed and fly cutters, 48; rifling cutters, 161.
Cyanid bath, for steel, II, 90; for blue mottled color, 217.

D

Dealers in gunsmithing supplies, I, 419-424.
Dents, removal from stocks, I, 210; from barrels, II, 346.
Designs for engraving gun parts, II, 359-368.
Dies, sizes for beginners, I, 15; threading, how to make, II, 44; making dies of other kinds, 57-68; hardening, 61; tempering, 62; forming dies, 62-66; correcting mistakes in, 66; for resizing cartridge cases, 299-301.
Director of Civilian Marksmanship, I, 129, 303.
Directory, addresses of dealers in gunsmithing supplies, I, 419-424.
Dividers, for laying-out work, I, 15.
Dragon's blood, superseded by analins, I, 45.
Draw-filing, methods of, II, 200; draw-finishing with emery cloth, 201.
Drawings, mechanical, how to read, I, 69-73; how to make, 71-73.
Draw-knife, I, 15, 50.
Drilling barrels, II, 145-153.
Drills, sizes needed, I, 15; how to use, 52-54; drills for making barrels, II, 129-132.
Drill jigs, how to make, II, 49.
Drill press, best makes of, I, 15; how to use, 54-55; centering device for, 128; a home-made drill press, 350; choice of drill presses, II, 8.
Dyes, where they come from, I, 350-351.

E

Ebony, African, I, 88.
Ejectors, automatic, I, 329.
Emery, kinds needed, I, 43; emery cake, cloth, and paper, 43, 64; use of in draw-finishing barrels, II, 201; grain numbers of, 202.
Enfield rifle, I, 223, 224; Lee-Enfield, description of, II, 402-408.
Engraving metal work, I, 307-319; beautiful examples of, 308, 309; essential tools for, 311-315; use of matting tools, 315; damaskeening, 318; engraved receivers, 318; the art of engraving for gunmakers, II, 359-368; tools used, 359-361; methods of etching, 362-366.
Etching and engraving, tools for, I, 307; use of the scraper, 309; of burnisher and graver, 310; acids and mordants used, 310; bottles for aids, 312; trays for aids, 313; ammonia, how used, 313; stopping-out varnishes, 313; what to do with screw heads, 314; use of matting tools, 315; damaskeening, 317; engraved receivers, 318; the art of etching for gunmakers, II, 362-366.
Extractors, for Hornet barrel, II, 183.
Eyes, use of both in aiming, II, 353.

F

Felt, to line vise-jaw blocks, I, 43.
Fiber, kinds needed, I, 43.
Field repair kits and devices, I, 367-371.
Files, classes and uses of, I, 16; brushes for cleaning, 17; handles for, 16; many uses for, 55-56.
Finish, final, I, 165, 256.
Firearms, antique, how to restore, II, 319-334; restoring old rifle barrels, 322; rifling a muzzle-loader, 324; reconditioning the locks, 236; the furniture, 327; fore-end tips, 329; nipples, 330; forming decorative metals, 330; ramrods, 330; stocks, 331; antique finish for stocks, 332; what to do with ancient arms, 332; where to get flints for flintlocks, 332; how to make black powder, 334.

Firing pins, correct form of, II, 182.
Flintlock, a picturesque reminder, II, 332-334.
Fluxes, uses of, I, 62.
Fooling with firearms, I, 369.
Forearms, best wood for, I, 111; reshaping, 208; repairing when loose, II, 352.
Fore-end, shaping the, I, 156; checkering the, 186; finishing the, 205, 208; restoring on old guns, II, 329.
Forge, how to select and use, I, 64; a home-made, 261; fuels for, 262.
Formulas, for linseed oil, I, 168-171; for wood stains, 173-174; for etching varnish, 313; for oils, solvents, and fouling solutions, 341-351; for bluing solutions, II, 211-214; for browning solutions, 214-216; miscellaneous, 216-221; for antique finish for stocks, 332; for making black powder, 334.
French army rifle, description of, II, 391-394.
French polish, how to obtain, I, 171.
Friction, laws of, I, 255.
Furnace, electric or gas, I, 17.

G

Gauges, for drills and wire, I, 15; for marking, depth, etc., 17; center, how to make, II, 40; making other kinds of, 51; barrel gauges, construction of, 139-142.
Gerlich, Mr. H., I, 160.
Glossary of shop terms used by gun makers, I, 411-415; of chemicals and substances used in gun making, II, 411-416.
Glue, how to heat, I, 15; how to apply, 43; best methods with, 347.
Gouges, how to make, I, 13, 34.
Gravers, how to use, II, 359-362.
Grease for guns, formula for, I, 342.
Grinder, bench, choosing a, I, 11; motor grinders, choice of, 32; how to operate, 56-58; choice of grinding wheels, 57; cylindrical, surface and internal grinders, II, 8; types of grinding machines, 15; selection of grinding wheels, 17.
Grip, hand and pistol, I, 113; checkering the, 186; pistol grip for rifle, 203-204.
Gun, how to handle with safety, I, 369.
Gun-metal finish, formula for, II, 217.
Gun parts, special, and their construction, II, 251-270; front-sight ramps, 251; sight covers, 254; front-sight fastenings, 255-257; pistol-grip caps, 257-259; butt plates, 259-260; palm rest, 270; rear-sight bases, 261; barrel swivel bases, 263; barrel bands, 264; swivel screws and bows, 265; barrel collars, 267; telescope mounts, 268; telescope blocks, 268; shields and ovals, 270; gun slings, 270.

H

Hammers, kinds needed, I, 17; adjustment of, 293-303.
Hand forging and heat treatment, I, 261-268; blacksmith equipment, 261; welding, 262; hardening and tempering, 264; case-hardening, 266.
Hardening steel, Brinell tests, I, 394; more about same tests, II, 99; methods of, 91-95; further methods, 95-106.
Headspace, rimless, definition of, I, 383; importance of, II, 174-176.
Heat-treatment, equipment for, I, 261; welding, 262; hardening and tempering, 264; oil tempering baths, 265; lead bath, 266; how to anneal steel, 266; how to blue steel, 266; case-hardening, 266; heat-treatment of barrels, II, 163-164; for bluing steel, 216.
Heel plates, British term for butt plates, II, 259.
Holder for rifle, how to make, II, 27; rifle machine-rest, types of, 28; how to construct, 28-30; for telescope, 31.
Holly wood, I, 88.
Horn, buffalo, uses of, I, 43.
Hornet cartridge, conversion of rifles for, II, 179-188; barrel must be of ordnance steel, 179; alteration on tangs necessary, 181; bushing breech blocks, 182; firing pins for, 182; extractors for, 183; chambering the .22 caliber Hornet rifle, 184-188.
Howe-Whelen sight, II, 286, 287.

I

Ignition, problems of, I, 334.
Information, mathematical, I, 351.
Inlays, shields and ovals, I, 192-197.
Iron, how to test, I, 266, 349.
Iron and steel, principles of, II, 81-85.
Ivory, uses of, I, 46.

J

Japanese Yen 38th model rifle, II, 387.
Jigs, drill, how to make, II, 49.

K

Knurling tool, how to make, II, 52.
Kornbrath, Rudolph J., artist in etching, I, 314; master of gun engraving, II, 359.
Krag rifle, refitting a, I, 130-131; changing service stock, 202-205.
Krag-Jorgensen rifle, description of, II, 394.

L

Lacquer, better than varnish, I, 45; for metal, 46; for stocks, 173.
Ladle, for melting lead, I, 17.
Laminated woods, for gun stocks, I, 213-216.
Lamp, alcohol, I, 9, 63.
Lands, definition of, I, 383, 413.
Lapping, I, 58-60; materials for, II, 52; details of the process, 164-166; lapping barrels and polishing shotgun bores, 241-248; measuring the bores, 241-243; casting the lead lap, 243; use of emery, 244; lapping shotgun barrels, 245; lapping out choke for pattern, 247; lapping chambers, 247.
Lathes, motor-driven, I, 17; bench and speed, II, 7, 9; types of, 11; tools for, 11; position of tools, 12; precision bench, 50.
Laying out work, details of, II, 49.
Lead, uses of, I, 42; for hardening steel, II, 90.
Lebel rifle, description of, II, 391-394.
Leed, definition of, I, 383.
Lee-Enfield rifle, description of, II, 402-408.
Linseed oil, best kinds of, I, 45; formulas for use of, 168-171.
Locks, speeding up, I, 302; how to repair, II, 338; detachable, 373.
Logwood, now rarely used, I, 45.
Lubricants, miscellaneous, I, 342.
Lyman 48 sight, I, 239, 250; made of ivory, II, 345.

M

Machinery, power, and general tool equipment, II, 7.
Machine tools, selection of, II, 10.
Magazine, inletting the, I, 123-126.
Magnifying glass, how to make, I, 18.
Mahogany, use of, I, 88.
Mallets, rawhide and wood, I, 17.
Mandrels, how to make, II, 48.
Mannlicher rifle, restocking a, I, 136; modernizing, 221, 225; description of in detail, II, 388; straight-pull, 396.

Mannlicher-Carcano rifle, description of, II, 386.
Maple wood, I, 89.
Martini action, alterations on, I, 337.
Matting tools, use of, I, 17; matting vs. checkering, I, 190.
Mauser rifle, restocking a, I, 136; modernizing, 221, 225; description of, II, 383-385.
Mechanical definitions and phrases, I, 411-415.
Medford method of rifling, II, 157.
Mercury, how used, I, 44; mercury treatment for lead fouling, II, 234.
Metal-fouling solution, formula for, I, 344.
Metals used in gunmaking, I, 41-42.
Micrometers, essential in gun work, I, 17; how to use, 65; kinds needed, II, 38.
Military small arms, modernizing, I, 219-227; review of, II, 381-408; Mauser rifles, 383-385; Springfield, 385-386; Mannlicher-Carcano, 386; Japanese, 387; Mannlicher rifles, 388; Lebel rifles, 391; Krag-Jorgensen, 394; Nagant rifles, 395; straight-pull action rifles, 396; straight-pull Mannlicher, 396; the Schmidt-Rubin, 398; the Ross, 401; lengths of different barrels, 402; British service rifle, Lee-Enfield, etc., 402-408.
Milling machine, choice of, II, 10; how used, 13; milling sight bases, II, 170-172.
Mills, hollow, how to make, II, 47.
Miter box, how to make, I, 18.
Monograms, examples of, II, 366.
Monte Carlo effect, I, 204-205.
Muzzle, removing a rusted, I, 333; lapping an old, 334.
Myrtle wood, I, 89.

N

Nagant rifle, good for amateur work, I, 222; description of, II, 395.
National Rifle Association, I, 219.

O

Oak, not suitable for gun work, I, 89.
Obstructions in barrels, removal of, II, 233, 235.
Oil, cans for, I, 19; lubricating and preservative, 45; oil finishes, best materials for, 166; oiling the action, 327; best oil for guns, 341; miscellaneous lubricants, 342; how to test, 343; brown or thickened, 343.
Oilstones, various kinds of, I, 18; how to use, 65; care of, 66.
Oil tubing, use of, II, 132-136.
Osage orange wood, I, 89.
Over-and-under guns, advantages of, II, 372.
Oxy-acetylene torch, use of, I, 360; cutting metals with, 362-363; high and low pressure torches, 363.

P

Pack-hardening, method of, II, 98.
Paduka wood, I, 89.
Palm rest, how to make, II, 260.
Pans, use of, I, 19.
Parallels, how to make, I, 19.
Parker Brothers, examples of their work analyzed, II, 371-378.
Patches and insertions, ideas on, I, 207.
Patterns, how to make, I, 346; patterns with shotgun charges, II, 354.
Persimmon wood, I. 90.
Phrases and technical terms, glossary of, I, 411-415.
Pistols, repairing, I, 271-289; single-shot, 285; automatic, 280, 288.
Pistol-grip caps, dies for making, II, 66; construction of, 257.
Planes, wood-working, I, 20; how to use, 50.
Plates, angle, I, 10; dowel, 19; lapping and oilstone, 20.
Plum wood, I, 90.
Polishing wheels, kinds needed, I, 21; methods of polishing barrels, II, 197-206; problems of polishing, 203; polishing bolts and other parts, 204; rules for polishing, 205.
Pope, Harry, noted barrel maker, II, 3.
Potassium, uses of, I, 44.
Powder solvent, formula for, I, 343-344.
Power for machine tools, II, 7.
Pressure pads, dies for making, II, 65.
Prussian blue, use of, I, 46.
Pumice powder, use of, I, 45.
Punches, various kinds of, I, 20; how to make for dies, II, 60; punch troubles, 67.
Pyrometers, use of, II, 89-90.

Q

Quenching baths, kinds of, for steel, II, 93; tanks used for, 93.

R

Ramps, front sight, how to make, II, 251.
Ramrods, for antique firearms, II, 329, 330.
Rasps, how to use, I, 51.
Reamers, how to make, I, 18; various kinds of, 21; how to use, 60; further details on making, II, 119-129; reaming barrels, 152-153.
Receiver, definition of, I, 383.
Recoil pads, rubber, I, 145; objections to, 202.
Refinishing stocks, I, 207.
Relining rifle barrels, II, 191-194.
Remington rifle, I, 222, 223.
Repair kits, items for the, I, 333-338; II, 236-237.
Repairs, how to make, I, 333-338; field kit for, 367; for broken stocks, 367; for actions, 368; for dents in shotgun barrels, 368; for bolt-action rifles, 368; for sights, 368; obstructions in barrels, 369; an emergency vise, 370; cleaning and removing obstructions from barrels, II, 227-237; repairs on shotguns, 337-355.
Replacement of small working parts, I, 255-258.
Revolver and pistol repairs, I, 271-289; making new grips, 272; improving the sights, 274; fitting new barrels, 276; replacement of parts, 278; causes of misfire, 279; checkering metal parts, 281; refinishing, 282; hammer alterations, 282; changing cylinders, 283; odd alterations, 283; relining barrels, 285; single-shot pistols, 285; how to select a good revolver, 287; how to test an automatic, 288.
Ribs, for single barrels, II, 348; how to resolder, 351.
Richards, Westley, examples of his work analyzed, II, 371-378.
Rifle, making a holder for, I, 36; accuracy in a, 380; factors in rifle shooting, 383; how to choose a, II, 72-75; barrel design and fitting, 103-116; reboring various makes of, 116; heads for boring, 136-139; relining the barrel, 191-194; final finishing, 193-194; military rifles, various types described, 381-408.
Rifling heads, how to make and use, II, 136-139; require patience and skill, 161; rifling barrels, 157-166.
Rigby method of rifling, II, 157.
Rosewood, I, 90.
Ross rifle, I, 225; description of, II, 401.
Rottenstone, use of, I, 43; rubbing pads for, 167.
Rouge, ferric acid, finest of abrasives, I, 46.
Rules, graduated, use of, I, 22.
Russian army rifle, description of, II, 395.

S

Safety with firearms, fourteen rules for, I, 77-78; chief causes of danger, 78-80; more rules for, 369-370.
Sanding drums, where to get, I, 15.
Sandpaper, kinds needed, I, 43; how to use, 66.
Satinee wood, I, 90.
Savage rifle, I, 225.
Saws, various kinds of, I, 22; how to use, 51.
Scales, weighing, where to get, I, 24.
Schmidt-Rubin rifle, description of, II, 398.
Screw-drivers, making your own, I, 22; best kinds of, 34-35; how to use, 61.
Screw-head polishing fixtures, II, 30.
Screw machine, selection of, II, 10.
Screws, machine, I, 42; wood, 43; positions of screws in Springfield rifle, 337; loose wood screws, 349.
Scribers, making from dental burrs, I, 22.
Sea Girt, New Jersey, meets held at, II, 71.
Shapers and planers, choice of, II, 9; how used, 13.
Shellac, diminishing use of, I, 45; gunmaker's, 341; shellac varnish, 348.
Shields and ovals, construction of, II, 270.
Shooting, correct method of, I, 221; II, 353.
Shop terms used by gunmakers, glossary of, I, 411-415.
Shotguns, stock designs for, I, 116; inletting action of, 131; choosing wood for, 131; modeling the stock, 152-154; removing obstructions from barrels, II, 235; tables of gauges of, 245; lapping out choke for pattern, 247; how to repair, 337-355; repairing the lock, 338; choke-boring, 338; chambering, 339-342; mending loose actions, 343; working on the barrel, 344-346; removing dents, 346; special ribs on single barrels, 348; resoldering ribs, 351; repairing loose forearms, 352; broken parts and renewals, 352; correct method of shooting, 354.
Sight bases, how to mill, II, 170-172.
Sight cover, dies for making, II, 64.
Sighting equipment, fitting the, I, 231-251.
Sights, changing on military rifle, I, 220, 222; fitting, 231-251; telescope, 231; open, 232; aperture, 232; barrel and tang, 234; peep, 235; fitting front and rear, 236-238; receiver sights, 238; Lyman 48 type, 239, 250; drilling and tapping for bases, 240; cocking-piece sights, 241; fitting telescope base blocks, 244; sighting in, 248; hunting telescope mounts, 251; principles governing sights, 383; optical, 383; standard telescope, 384; dies for making removable sights, II, 64; telescope and metallic, 76-78; ramps for, 251; covers for, 254; fastenings for, 255; bases for, 261; telescope blocks and mounts, 268; manufacture of sights, 273-287; rear open sights, 275; aperture and open sights, 278; front sights, 278-280; aperture front sights, 280-283; bolt-sleeve sights, 283-286; Howe-Whelen sight, how assembled, 286; sight-setting gauge, 287; how to repair sights, 345.
Silvering, formula for, II, 220.
Sine bar, how to make, II, 53.
Single-shot action stocks, I, 115.
Small arms, experimental factors governing, I, 375, 407; military small arms, review of, II, 381-408.
Slings, for guns, II, 270.
Smith & Wesson revolver, I, 271, 274, 275, 277, 283, 286, 288, 295, 296.
Snap shooting, how to become proficient in, I, 370.
Solder, composition of, I, 42; soldering salts, 43.
Soldering, with electric iron, I, 16, best methods of, 61-62; soldering, brazing, and welding, 355-363; solder fluxes, 355; soft solders, 356; hard soldering, 357; sweating, 357; fluxes and alloys, 357; silver solder, 358.
Spoke-shave, use of, I, 20, 51.
Spring making, principles of, II, 291-295; analysis of proper spring steel, 291; proper methods of forging, 291-292; hardening and tempering, 292; helical springs, 293; spring winding tools, 294; using steel from an old automobile spring, 295.
Springfield rifle, restocking a, I, 123-130; "Sporter" model, 201; changing service stock, 202-205; modernizing, 219-225; adjusting trigger pull, 297; speeding up lock time on, 303; engraving the metal work on, 319; disassembling a, 323; .22 caliber bolt stop, 337; where to find description of, II, 385.
Spring-winding tool, how to make, I, 24.
Squares, various kinds of, I, 24; die-maker's, II, 40.
Stains used for wood, I, 166, 172; where they come from, 350-351.
Stance, correct, in shooting, II, 353.
Steel, letters and figures on, I, 24; tool steel, definition of, 41; cold-drawn, sizes required, 41; drill rod, sizes used, 42; spring, 42; tubing, 42; wool, 43; how to weld, 263; how to temper, 264; how to anneal, 266; how to test, 266; case-hardening of, 266-268; checkering, 281; new tests for, 349; a glance at the various kinds of steel, II, 41-42; principles of, 81-85; carbon steels, 82; nickel steels, 82; nickel chromium steels, 83; chromium-vanadium steels, 84; molybdenum steels, 84; screw-stock steel, 84; crucible or tool steel, 85; heat-treatment of steel, 89-99; furnaces for heating, 89; how to anneal, 90-91; hardening, critical temperatures, 91-95; tempering, 97; case-hardening, 97; pack-hardening, 98; testing hardness of 99; steel for barrels, 104-106; stainless, 106.
Stevens single-shot rifle, restocking a, I, 213.
Stinkwood, African, I, 89.
Stock, choosing the wood for, I, 83-97; designing and making, 101-119; fitting it to the customer, 102; estimating length of, 103; stock nomenclature, 104-106; cast-off and cast-on, 108; butt stock design, 109; cheek pieces, 110; comb design, 111; forearms, 111; grips, hand and pistol, 113-115; single-shot action stocks, 115; shotgun stock designs, 116; abnormal stocks, 117; laying out the, 123; selecting wood for, 123; fitting action into, 125-139; modeling and shaping the, 143-156; boring and roughing out, 149-151; giving final finish to, 165-176; surgery for, 201-210; making it fit your build, II, 75; darkening, on antique arms, 331.
Stop pins, on dies, II, 67.
Straight-edge, how to make, I, 22; knife-edged, II, 40.
Straightening barrels, II, 148-152.
Striking barrels and polishing gun parts, II, 197-206; definition of "striking," 197.
Sulfur, uses of, I, 44; sulfur casts, formula for, 345-346.
Swages, for making bullets, II, 301-303.
Swiss army rifle, description of, II, 398-401.
Swivel bases on rifle barrels, II, 263; swivel screws and bows, 265.

T

Tangs, alteration of, for Hornet rifle, II, 181.
Taps, how to make, II, 42-44; how to harden, 44; taps and tapping, 62-63.
Telescope sights, I, 231, 384; II, 76-78; telescope holder, how to make, II, 31; telescope mounts and blocks, 268.
Tempering, by the color method, II, 95; use of oil for, 95.
Templets, when and how to make, I, 24.
Test indicator, best to buy, II, 40.
Threading dies, how to make, II, 44.
Tongs and tweezers, sizes needed, I, 24.
Tool holder, use of, I, 36; adjustable, how to make, II, 23; boring tool holder, 52.

Tools, descriptive list of, I, 9-25; use of, 49-66; glossary of names, 411-415; dealers in, 419; general equipment, II, 7-19; special tools for gunshop, 21-33; for barrel cleaning, 23; methods of making tools, 37-53; most necessary tools, 37; standard types, 42; how to make forming tools, 47; bench-lathe knurling tool, 52; boring-tool holder, 52.
Tool steel, defined, I, 41.
Trigger, mechanism of, I, 293; adjusting the pull, 221; problems of the, 293-295; minimum pull on revolvers, 295; on automatics, 296; bolt-action pulls, 296; set triggers, 299; shotgun triggers, 300, 301; speeding up lock time, 302; single, advantages of, II, 374.
Troy weight, table of, II, 222.
Tubing, oil, II, 132-136.
Turning, tools used in, I, 63.
Tweezers, sizes needed, I, 24.

U

Umber, raw and burnt, for wood staining, I, 45.
Utility electric motor, I, 24.

V

Varnish, kinds for gun work, I, 45; remover, 46; use of, in etching, 313; varnish not best for stocks, 173; how to remove, 174; varnish for gun-lock, formula for, II, 221.
V-blocks, where to get, I, 24; how to make, II, 38.
Violin-varnish finish, I, 172.
Vises, kinds needed, I, 24; false jaws for, 25, 37; vise blocks, 37; vise clamping, when polishing barrels, II, 205.

W

Walnut, use of for gun stocks, I, 90-93.
Water, distilled, use of, I, 46.
Weight, tables of, II, 222.
Welding, principles of, I, 262; autogenous, 359; equipment for, 360; oxy-acetylene torch, 360; making welds, 361; pre-heating, 361; welding steel, also brass, 362.
Whelen, Colonel Townsend, on bedding barrels and actions, I, 159-161; on lever action, 326.
Whims and fancies in firearms, II, 71-78.
Winchester rifle, alterations on single-shot action, I, 336.
Witzel, Dr. E. J., workshop of, I, 223.
Woods for stocks, where to procure, I, 46; selection of, 83-97; how to handle seasoned blanks, 94-95; prices of blanks, 97; stains for, 172-174; laminated, 213-216; seasoning of, 213; end-checking of, 216; steaming for bending, 348.
Wood-working tools, choice of, II, 10; best makes of, 17.
Woody, Captain G. A., on chambering the .22 caliber Hornet rifle, II, 184-188; on bullet resizing dies, 299-303.
Workbench, how to make, I, 9.
Working parts, replacement of, I, 255-258.
Workshop, locating and equipping, I, 9.
Wrenches, kinds needed, I, 25.

Y

Yen 38th model rifle, description of, II, 387.
Yew, British, use of, I, 94.

The Modern Gunsmith Supplement

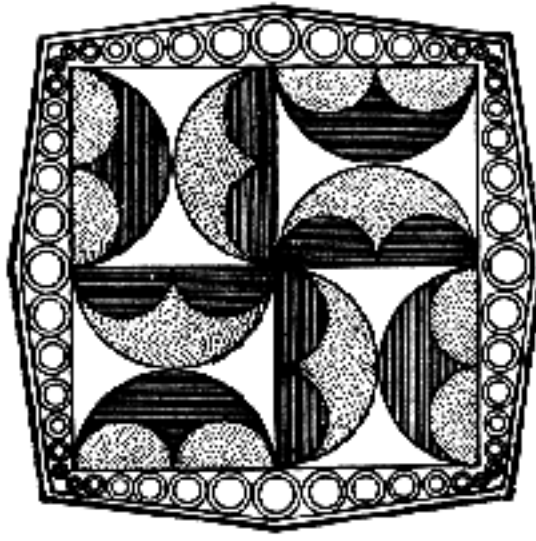

THE MODERN GUNSMITH

SUPPLEMENT

Latest Developments, up to 1941, in Metallurgy, High-Velocity Projectiles, the Merits and Defects of the Garand and Other New Semi-Automatic Weapons, and Some Recent Inventions

By
JAMES VIRGIL HOWE

FUNK & WAGNALLS COMPANY
New York and London

PREFACE

AS THIS two-volume work on gunsmithing has been extensively used by all lovers of firearms in our country and in several foreign countries, and has, in its entire circulation, exceeded three editions, the author and the publisher have felt it their moral obligation, in return for such distinguished interest, to use their best endeavors to render the work as complete as possible for those in whose behalf it was primarily designed. With this in view, much of the work has been revised in the large books, and this supplement is now added as an incorporated part, bringing the subject more fully up to the present advanced state of the art of gunsmithing and gunmaking than has been done in any similar book in this country or abroad.

The present supplement contains a number of new chapters on phases of the subjects which the progressive state of firearms development has rendered permanent since the first great European war. Among these are various aspects of practical metallurgy, notably in the art of increasing velocities, in the ability to ream gun barrels with greater precision and without injury to the metal surrounding the bore, in producing the most ideal finishes to metal and wood, in handling the new automatic military weapons, and in gauging the wind in testing small arms. High velocity is a subject but little understood. This is true not only of the average sportsman but also of military engineers; yet the subject is one of so much importance to all nations in wartime and to all riflemen who wish to secure greater range and killing power in their weapons, that we have greatly enlarged this chapter. The new chapter, also, on "Gun Barrels, Their Steels, and a Safety Analysis" has been prepared with greater care than usual and will, it is hoped, give the sportsman and target shooter a clear and intelligent understanding of the strains and stresses to be found in all gun-barrel steels, and of their proper treatment at the hands of the experienced rifleman and gunmaker.

We have aimed here, as in the main volumes, to furnish a full view of the most useful gunsmithing knowledge and its most important practical applications; but we have sought to avoid the error that mars too many of the attempts to render our art easy of comprehension—that of setting forth nothing but what is so barren and superficial as to be of little service to either the professional gunmaker or the learner. Addressing ourselves to the more advanced technical field of gunmaking, and keeping constantly in view the practical applications as well as the modern improvements, we have been careful to give to each additional chapter a space proportional to its value in relation to its objective. To render difficult gunmaking plain and intelligible to the young shooter of military age, and to enrich his mind with such knowledge as may at once inspire a love and a habit of using small arms on the rifle and pistol range, has been the author's aim; it has been his desire also to furnish practical suggestions to many who are dissatisfied with themselves and with the weapons they are continually firing, and who lack the essential knowledge that would make them perform efficiently and thus enable them to secure higher scores —or promotion in the ranks.

Besides the men who are about to be pressed into military service, we have had constantly in view two other classes of readers—first, gunsmiths who must be trained and educated in the service and who may desire to continue the study of gunsmithing as a means of livelihood after their honorable discharge; and, secondly, practical target shooters and sportsmen, who consult a work of this class for principles which they can employ in judging all weapons that they own or expect to purchase. In conclusion, we truly believe that the present supplement, although of small dimensions, will be found to contain an unusual amount of such information as is required by the ballistic engineer and the gun mechanic, and that the two-volume work and this supplement together deserve, therefore, a place in all their libraries.

J. V. HOWE

Wayne Oak Plantation, Virginia,
January 10, 1941

CONTENTS — Supplement

CHAPTER PAGE

I — Some Matters of Major Importance 9

The dictators—Those who have been inspired by *The Modern Gunsmith*—Finding our men of mechanical ambitions—In variety we create intelligence—The demand for technically trained men—In the field of mechanics—The discovery school—That which makes a gentleman of him—The inventive field—The working imagination—The inventive imagination—In the field of invention—Seeking original ideas—Waiting for inspiration—Men who have continued to work after becoming rich—The sense of proportion—Engineering responsibility.

II — Iron and Steel in Nature and in Guns 13

Each phase of metallurgy—The background of metallurgy—The subject of vital interest—That yellow stain on the edges of brooks and springs—Iron in the state of rust—Alive and dead—Oxygen and its influence—The earths and the alkalies—The earth turned into flat plates of metal—Metals breathe—The oxides—Carbon—Manganese—Nickel—Chromium—Molybdenum—Silicon—Sulfur—Phosphorus—Copper—Aluminum—Tungsten—Vanadium—The function of the alloys—The responsibility of the metallurgist—The application of logic.

III — Gun Barrels, Their Steels, and a Safety Analysis 16

The problem of classifying steels—Trade names are more descriptive than accurate—In the past, steels were just steels—Seeking a metallurgist—Barrels that have blown apart—The chemical analysis—The bad barrel—Cutting out the specimen—Polishing the specimen—Etching the specimen—Studying the structure—Photographing the surface—The light and dark areas—The effects of sulfur and phosphorus—The bad bar of steel—Chambering the Model 1917 Enfield rifle—Aided by the microscope—The pressure a gun barrel can stand—Producing accurate gun barrels—The Brinell and Rockwell hardness standards—The steels recommended.

IV — Gun-Barrel Stresses and Strains, and their Treatment 21

Regulating our habits—Human frailty—Indications of inaccuracy—A study of the problem—An old familiar story—The gun barrel is not a rigid body—Manufacturing a gun barrel—The blank and the forging—The heat treatment—The grain sizes—Where strains are in evidence—The injector body and plunger—An experiment—Tests at the Springfield Armory—Clamping the barrel in a vise—The vibrations—The bullet fitting the bore tightly—The stress-relief treatment—Artificial treatment—Warming up a high-velocity barrel—Starting water through the barrel—What is gained by seasoning an old barrel—Looking through a rifle barrel—Unavoidable manufacturing conditions—The process of making good guns.

V — Producing Finishes and Surfaces 27

A gun-lover among his guns—Arousing a young man's interest—An art created by skilful craftsmen—The guns from the hands of master gunsmiths—The two separate senses—Sensations in appearances—The polished surface—The metallurgist with his microscope—The spiral fluted reamer—Removing metal without marring the surface of the structure—The conventional type of reamer—Reamers are just reamers—The rules in general—The surface fractures—The minute fractures—Why failure of a part occurs—Shaving away the chips—The internal surface imperfections—Surfaces that

CHAPTER PAGE

cause friction—The bullet's starting flight—Lapping, one of the oldest arts—The amount of skill required in lapping a surface—The finish has been sadly neglected—Finishes that are lasting and those which are deceiving—Smoothing the surface—Using the magnifying glass.

VI — Essential Results of High-Velocity Experiments 32

Our national defense preparations—Foreseeing the possibilities of higher velocities—Reviewing Gerlich's patent—His claims—The War Department's experiments—Where performed—Our start on the problem—Producing results—The author went to England—His failure there—The two negative words—A visit to the War Department—Accused of being in Poland—The story from the Berlin attaché—The discovery of the high-velocity gun—What the Germans then accomplished—Our claims recorded—Turning our attention to the scientific aspects—The laws of mechanics—The bullet's mass—Acceleration—The powder gases act—Friction and velocity—Eliminating a part of the rifling—Our experiments—The gun barrel that is bore-free—The bullet entering the rifling—Bullet material—The proper solution—The plastic material—The methods in which it is used—The two-sectional type of barrel—Joining the two barrels—The results—Making the barrels—Leading up to the tapered cone—Experimental trials on bullet pressure through a cone—The author's findings—The one-fin bullet—The methods employed to make these—Fiber and celluloid bases—The record high velocity had been secured—Conclusions.

VII — Gunpowder and Its Influence 43

The request for formulas—The author's answers—Gunpowder burns—A high explosive detonates—Nitroglycerine and its value as a propellant—Its action—Many are convinced that it can be used—The mechanical effect—The yield of the volume of gas—Illustrating the effects—A material that disappears into dust—The weight striking the atmosphere—Results of the author's early black-powder experiments—Compounding the ingredients—The function of the elements—The energy of heat—Oxygen—Carbon—Dr. Diesel's experiment—Nitrogen—What an explosion means—Nitroglycerine gunpowder—The term force—Nitrocellulose gunpowder—The fundamental process—A comparison—That which is known as a propellant—The safety of the primer—Uniformity in loading, and of the chemicals.

VIII — Gauging the Wind in Shooting and in Rifle Testing 48

Overestimating the strength of the wind—The author's observations—Wind pressure as a factor—Wind in terms of pressure—Wind in terms of velocity—Gauging the speed of the wind correctly—Some suggestions—Effects on bullets in flight—Where to look for the effects—The use of the anemometer—The wind gauge—Wind in terms of force—Wind is a natural force to contend with—Many of the descriptive terms used—Specifying wind in accurate terms—Making a series of measurements—Such measurements would be invaluable—Something that would merit attention.

IX — The Cost of Firearms 51

A wise man who lived in Teheran—He gave free counsel to all—We purchase guns as presents to ourselves—Those with falsely developed tastes—In the matter of purchasing judgment—The first step toward the gun-appreciation sense—Purchasing either a rifle or a shotgun—Individual gunmakers—Those who are called robbers—We are advised to advertise—Guns made under the direction of experienced men—Special guns are tailored to fit—The center of the British gun business—Expressing an opinion—Those who purchase the best guns—Our financial standing descends—Guns under the heading of luxuries—Sportsmen and catalogues—What is money worth?—The value of guns—We do not purchase guns with dollars—We purchase guns in terms of hours at labor—Guns in terms of our ability to earn what they cost.

CHAPTER PAGE

X — Semi-Automatic Military Weapons 54

The most complex of firearms—The number of types—Our service bolt-action rifle—The Garand Semi-Automatic Rifle—The three types touched upon—Employing accurate machinery—Operations are exactly numbered—A file is seldom used—Equipping two million men—The number of parts—Employment of gauges—The sets—Preservation of the gauges—The system of inspection—An example—The stock wood—Historical outlines—The first appropriations made—The outcome—Mr. John D. Pedersen—Mr. John C. Garand—The Pedersen semi-automatic rifle—A comparison—The merits of an inventor—Gas-operated—A study of the Garand rifle—The rear sight on the Garand—Value of an aperture sight—The discovery of the aperture—Sighting a rifle through a pinhole—Our sense of vision—The Thompson Sub-Machine Gun—Its operating principles—The Johnson Semi-Automatic Rifle—Its operating principles—The bolt—The firing mechanism—A study of both guns—Efficient manufacturing methods—The tooling up of the Garand receiver—Our discovery—Parts must not be complicated—Parts which are easy to manufacture—Their use in modern warfare—Those who are willing to make war upon us—Two centuries hence—Time's spiteful revenge—The Springfield as a military weapon—Fate of our newest models in another half-century.

XI — A Broader View of Craftsmanship 63

His chisels—Improving our leisure hours—Craftsmanship as a hobby—Small woodworking machines—The home workshop furnishes the impulse—A hobby creates that incentive—The high-speed forming tools—The beginning materials for a gun—Turning to ancient times—The era of severe accuracy—The days of patient labor—Machines are not artistic—A certain number of boys—Apprentices—Taste dominates the emotions—The study of facts—Dignity of all kinds of labor—Happiness in work—Of talent—The crafts involved—From all walks of life—The dead rooms in museums—The humble gunsmith—A shop of your own—Breakage and decay—Restoration of antiques—Early development of craft interests—Factory and individual—The waning of curiosity—Not feeling out of place in this world.

ILLUSTRATIONS—Supplement

FIGURE		PAGE
1.	It is the ambition of every gun inventor to own a bench lathe	10
2.	It is also the desire of every guncraftsman to own a milling machine	11
3.	The slag elongation in the direction of which Damascus, stub twist, wire twist, etc., were welded. This is the reason why so many of these barrels go "bad" when a heavily loaded cartridge is used	17
4.	*Top*—The position of a 2¾-inch shotgun cartridge in a 2½-inch chamber. The dotted lines show the crimp as it opens out into the cone. *Bottom*—The correct position of a 2¾-inch cartridge in its proper length of chamber. It is also the cause of many of the old guns' going "bad"	18
5.	Free ferrite or sulphide of manganese, which is often found in all types of steel. It is hard to secure a desirable internal finish when this is in evidence	20
6.	The standard practise in all arms plants of forming a gun-barrel forging rolled from the hot bar of steel	22
7.	Grain size Number 2	22
8.	Grain size Number 8	22
9.	Discovering the coarse microstructure in steel	23
10.	The microstructure of overheated steel	23
11.	The microstructure of steel showing incomplete heat treatment	24
12.	A cleaning tube with funnel is an aid in the seasoning treatment	25
13.	A perfectly finished surface without a scratch in evidence—100 X, unetched	28
14.	The spiral fluted reamers of ⅜- and 19/32-inch diameters	28
15.	The Gerlich high-velocity tapered rifled gun barrel	32
16.	The Gerlich two-diameter bullet, caliber .35-.25, weight 100 grains	33
17.	The two-diameter bullet with but one fin, and with fiber base attached, caliber .30-.22, weight 45 grains	33
18.	The experimental two-sectional barrel. Here a caliber .30 barrel has been attached to a caliber .22 barrel	39
19.	The tapered cone or gas-expansion chamber constructed ahead of the cartridge chamber	40
20.	All marksmen should have an anemometer in view to tell the force of the wind	49
21.	A wind gauge also should be in view on any target range, so that the changing direction of the wind may be observed	49
22.	The machine rest which was made by Otto A. Wagner, Ensign, Kansas. A very fine example of a home-made machine rest	54
23.	Main exterior parts of the Garand Semi-Automatic Rifle	55
24.	Main interior parts of the Garand Semi-Automatic Rifle	55
25.	An aperture is nothing more than a hole in a disc. B = The direction in which sighting is directed	58
26.	The Model 28 A C Thompson Sub-Machine Gun	59
27.	The Johnson Semi-Automatic Rifle	60

The Modern Gunsmith
Supplement

CHAPTER I

Some Matters of Major Importance

THE spectacle of destruction furnished by Europe's dictators, with their threat of death to all who may oppose their dictatorial power, has affected the peace of our own nation, compelling us to prepare for action in the event that their designs may reach to the Western Hemisphere, which we must defend; and to defend it we shall require thousands of technical and mechanical experts similar to those which *The Modern Gunsmith* has produced since its publication in 1934.

The Modern Gunsmith, it is true, has inspired hundreds of sportsmen to become successful gunmakers and gunsmiths, and these can give a good account of themselves when called upon to do so; but how can we secure the thousands of mechanically minded men which we now require in keeping a large mechanized army in the field? What means shall we employ to find the mechanical geniuses who can be used in our large munition plants, or how shall we produce the necessary number of gunmakers, gunsmiths, tool- and die-makers, machinists, and men to handle or repair aircraft engines and instruments, in order that a large army and navy may be kept in operation?

The first answer to these questions, of course, is that we always have to find our men of mechanical ambitions, not to make them; we cannot manufacture them, any more than we can manufacture the iron ore of which all weapons of war are made. But it is possible to find both the right ore and the right men, and to educate these men. A certain number of mechanically minded infants are born annually in every country, greater or less according to the nature and advancement of the nation; but only a fixed number annually, not increasable to any great extent. Without a doubt it is possible to find two or three Edisons at this moment in some of our industrial centers or in government employment; but we are not using their particular talents in war industries, where they could do the most good; indeed, we may only be oppressing and destroying their ambitious spirits. And the mechanical gift usually is not combined with other talents; your born gunmaker, if you do not make a gunmaker of him, will never become a successful doctor or chemist; and the special gifts of such a man are seldom detected by the heads of the average industrial organization. They fail to recognize the fact that variety, not specialization, develops the human brain.

Through variety we create a certain degree of intelligence, which we can make use of only by setting it at its proper work; if any attempt is made to use it otherwise, the result is the dead loss of so much human energy.

Now that we are in urgent need of such men, how are they to be discovered? Easily enough! To desire to employ them, is to discover them. The needs of the War Department today are for mechanics—gunmakers, tool-makers, and instrument-makers in every important government arsenal, aircraft engine factory, navy yard, and in industries that are working on war orders and cannot find men of such talents; therefore they must train men who are able to fit in where they can accomplish the most good. Many who have studied *The Modern Gunsmith,* namely, sportsmen, shooters in general, and gun hobbyists who have used this book in their home workshop—farmers' sons, salesmen, clerks, and ambitious apartment-house dwellers whom the urge to use tools has made mechanically minded, and others in all walks of life—would make excellent apprentices to supply the great demand for mechanics. To complete the education of such men, schools are urgently needed; but these schools must not be entirely regulated by formal political laws, nor should the teachers be selected from the rank and file of manual-training instructors. Not only should these teachers be finished masters in their particular fields; they should also be able to find out what their pupils are adapted for in the field of mechanics.

After passing through the school he has selected, the student must be given secure employment.

This is a matter of chief importance, for even under the present apprentice system the young men who have real mechanical ability generally make mechanics of themselves, whether in the field of gunmaking or in similar industries.

Having provided these young men with the right kind of school and the proper employment, and having encouraged them with judicious praise, one thing more remains to be done for them in order to prepare them for complete success in the work they have chosen; namely, to make, in the complete sense, gentlemen of them; that is to say, to take care that their minds receive such training that in everything they undertake, whether upon weapons, aircraft engines or a locomotive, they shall see and feel that they are putting forth their best efforts, and are treating the work they do in the most gentle and human manner. Unfortunately, in the education of the average mechanic, the calm and gentle part of his being has been the most neglected. Too frequently one may perceive some jarring defect in his nature, some element of degradation in his treatment of machine tools and fine precision instruments, owing to the want of a more gentle training and the liberal influence of the right kind of books.

There are many other points of nearly as much importance as this, which must be brought to light with reference to the development of genius in the inventive field. We must look for these men in the various mechanical trades. Many of them may not possess the rank of genius, but they are men who are ready and willing to develop their creative talents to higher purposes, especially that of producing more efficient weapons for our own defense. Mechanical geniuses, interesting as they are when discovered, should be placed in key positions, especially where weapons and tools are in need of improvement. But mechanical genuises are born, not made, even by our best technical instructors. Teach as much as we can, yes; but we must first teach the same thing to all: how to make correct observations of all things mechanical, and more especially of sight impressions.

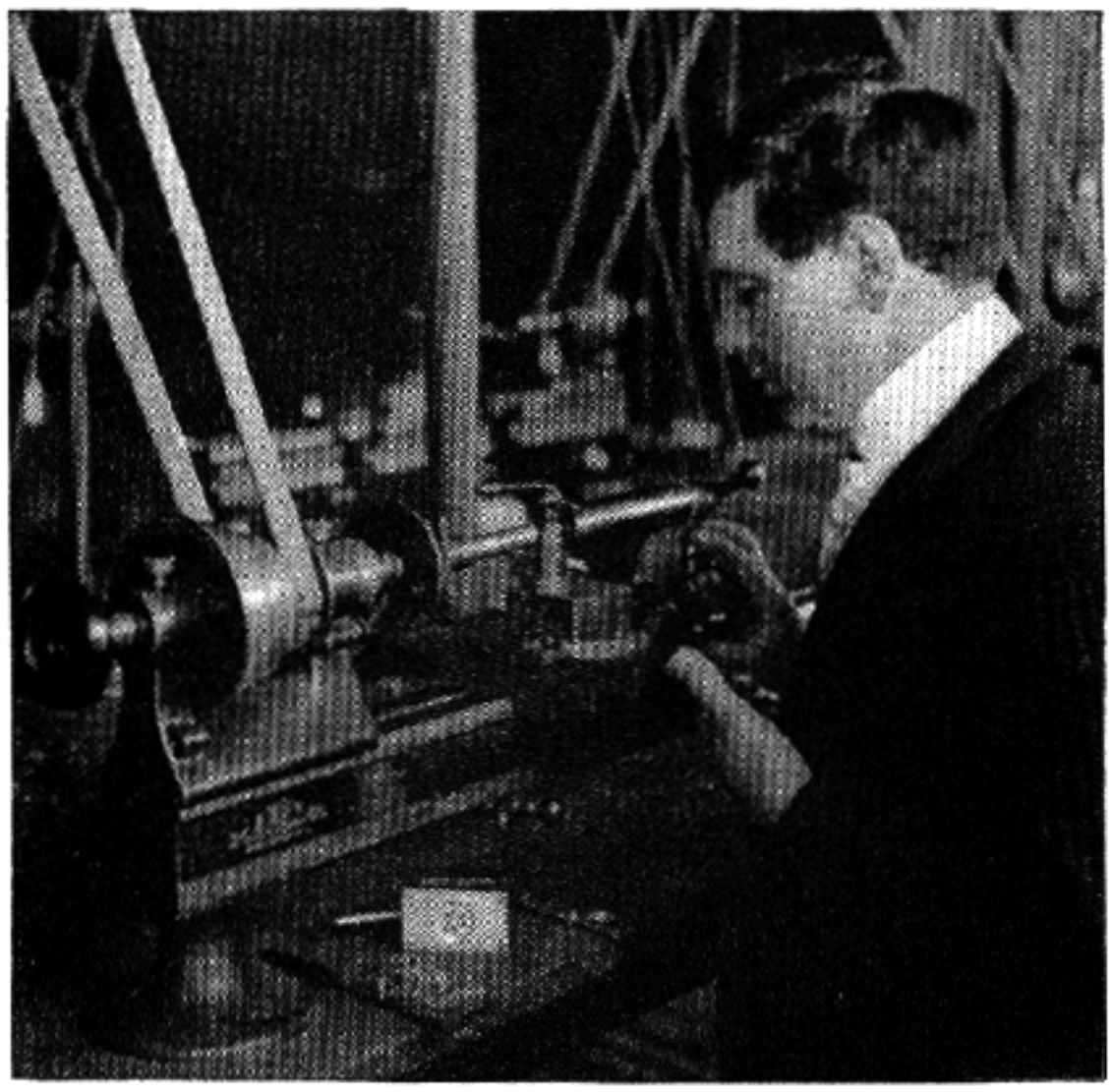

Fig. 1
It is the ambition of every gun inventor to own a bench lathe

A very difficult subject to teach, this, perhaps, for it must be combined with the proper brand of inventive imagination, the most important element in the whole range of technical training. We must be taught to think as we make observations; and it does not matter how much imagination we possess if we do not know how to use it. What is needed, in these days of war preparation, is to be able to see in the dark—foresight, that is the greatest gift of all.

Certain it is that our immediate business, in such a school as we have described, will prosper more by attending to the mind than to the use of the hands in the beginning courses. We can do more good by simply endeavoring to enable the student to use his inventive imagination as applied to mechanical work. This, especially for those who are destined to labor afterward upon fine precision work, whether upon weapons or instruments, is the most valuable preparation the student can have. He must begin observing without any sense of effort before he can apply his mind to mechanical observation as a business. All gunmakers have been amateurs in the beginning, however early in life their first serious work may have been performed, and all amateurs have begun by watching mechanical things as idle people window-shop. We are first enticed by the pleasure of irresponsible imagination, and afterward led into the work by a sort of accident. Between the ease of irresponsibility and the ease of mastery there lies a difficult passage, that season of apparent failure when the imaginative power is impeded by the straining of the attention.

Invention is simply mechanical imagination at work on a given task. The distinction between the inventive imagination and the common power to think out mechanical improvements lies simply in the capability of discipline.

To this it may be answered that the idea which would be considered the source of the real invention usually comes to us involuntarily, as for example, when a gunmaker hits upon a new and original rifle sight at a time when his mind is occupied with a barrel problem. We are aware of this, but we do not consider that the real inventive power is to be sought for in the original idea, which is often of

the most extreme simplicity, and is not infrequently borrowed from another source without any kind of acknowledgment. Sketches of first ideas, both by research engineers and inventors, are frequently so crude that they give one no conception of the work the perfected invention is to perform; the inventor only sees his way as he proceeds. What he does is to make some sort of attempt and see what he can make of it by the trial-and-error method—with the aid of his inventive ability. Then comes the real test, which is the working out of the idea so as to present it in its exact proportions, and with the most vivid appearance of reality when all its component parts are assembled, whether it be a machine or a gun. To accomplish this, he "sets his wits to percolate"; that is, he makes his imagination obedient to his will. The everyday sort of man seems to have no imagination in mechanics because he is unable to apply his disconnected dreamings to a definite purpose.

When the real gunmaker gets hold of a good practical idea, he applies his mind to the business of invention in this way. He is not able to invent at a moment's notice, but he knows that in the course of time, he will certainly be able to work out the requisite amount of detail. An arrangement is made between a sportsman and a clever gunmaker by which the gunmaker promises to deliver a new type of shotgun with features in the action and locks which are patentable. At the time when the promise is made, he is ignorant as to the locks and details of action design, but he knows that by the application of his imaginative power he will be able to form the action and locks to the proper proportions. An uninventive sportsman might see almost as much of the shotgun's action after his first glance at some crude sketches made by the gunmaker, but the difference is that he would never see anything more.

It is my belief—and I hope that many will accept it, as it comes from one who has made numerous improvements in small arms, ammunition and diesel engineering—that invention is imagination which can be made to work; therefore, it must follow that real inventors will work at inventing improvements just as they would at anything else, and those who "wait for inspiration" are those who are the least likely to be honored. Does not experience generally confirm this? Setting aside the general belief that men of genius are conceited individuals (an error that can only arise from ignorance of the toil involved in work which seems so easy), and looking at the real facts of the case, do we not find, when we know them personally, that they labor just like other professional engineers?

We may even go further and say that if there is a difference, it is in favor of the men who possess mechanical genius, for they work more than common mechanics, because they have a much finer appreciation of what they are doing, and take pleasure in performing it and seeing their creation finished and working. Consider the amount of experimental work performed by Eli Whitney, Blanchard, Edison, Steinmetz, Pope, and Wright! In some cases it is true that the great labors of men of genius have been performed under the stimulus of necessity, but we do not find that wealth leads to wasting precious hours in their case. Browning, the inventor of the automatic rifle and machine gun, and Henry Ford continued to work long after they had become rich men. It is easy to acquire knowledge, but invention we bring with us, to develop it in great or little measure, as these men did, for they developed it while young and never allowed it to die within them.

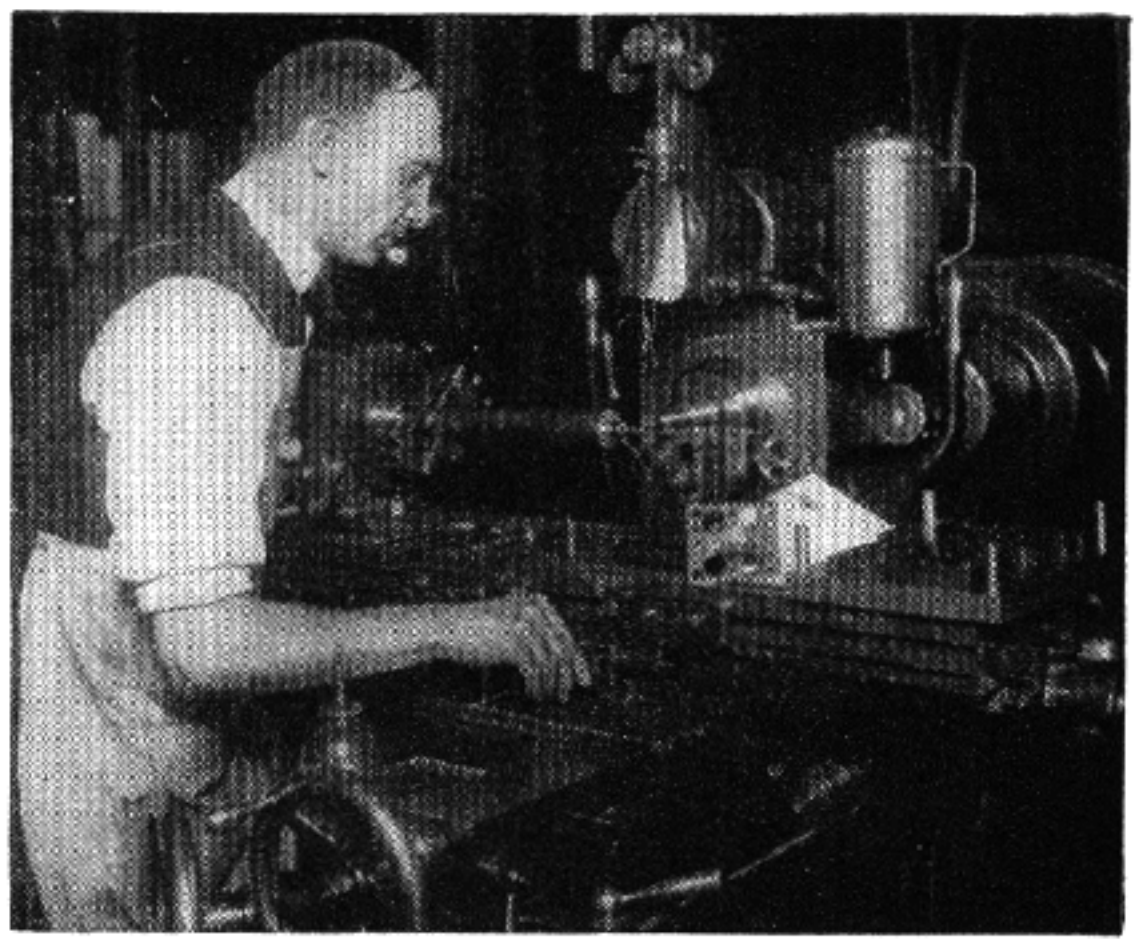

Fig. 2
It is also the desire of every guncraftsman to own a milling machine

Invention in firearms and ammunition, as in every other mechanical art, requires a certain amount of freedom of action, especially in gun and ammunition experiments; and this freedom involves a working condition of a peculiar kind, which has led to the belief that firearms inventors are an especially gifted race. If he were bound down to rigid factory supervision, the gun inventor would be unable to perform the best which is expected of him. All inventors working upon firearms select steels which have great strength, and if the material does not possess strength in its easily workable state, they can easily specify the proper heat treatment after a part is completed. Their education in the metallurgical art enables them to do this, for the recog-

nized men of invention have always done it, and their strong successors are likely to continue the practise, always applying, too, the proper sense of proportion to the things they invent.

That is why hundreds of young men study engineering in all its branches in many technical schools. Too often, however, these young men, not having a well-developed sense of proportion, do not make the best mechanical engineers after graduation.

The term "proportion," in arithmetic, denotes the ratio one number or distance bears to another, and is essentially a concept of linear relations. A "sense of proportion," of course, permits one to estimate fairly well whether one gun barrel is double, one half, one quarter, or one third the length of another, but it certainly is not limited to that. There appears to be some appreciation of the squares and cubes of quantities, especially in measuring gunpowder, although this may, to a great extent, depend upon one's experience.

It is interesting to contemplate how far a gunsmith may go in his reliance on judgment, or sense of proportion, without being led astray. Dimensional analysis is a convenient tool for such investigation, and has the advantage of revealing those fundamental relations which, in so many cases, make it possible to design guns "in proportion" or by "rule of thumb" successfully.

It is safe to say that whenever a new gun is designed which involves geometric similitude, the mechanical engineer's sense of proportion is of inestimable value, but that, conversely, where geometry is not involved directly, the mechanical engineer is apt to guess the wrong answer unless he makes use of theory, or research, or both. Unfortunately, the highly trained technical person is only rarely endowed, to any high degree, with that fine sense of proportion, clarity of vision, and creative ability which is an attribute of the successful "practical" inventor or research engineer. Indeed, I fear that too much intensive technical training tends at times to becloud and suppress the most desirable characteristics of a successful gun designer; and too much logical thought tends to crowd out the more artistic and spontaneous creative thinking that is also necessary in gun and ammunition design. Be that as it may, the engineering department of an arms and ammunition factory is usually faced today with the problem of persuading these temperamental individuals to work in harmony. The gun inventor is fortunate who possesses the talents for creative invention and yet has a strong technical background.

CHAPTER II

Iron and Steel in Nature and in Guns

THE importance of conveying to the non-technical gun hobbyist and sportsman a working knowledge of metallurgy, as a foundation upon which to build a clearer understanding of the chapters to follow, cannot be overemphasized. Only by carefully arranging, classifying, and subdividing these fundamentals according to their respective importance to the gun lover, can each phase of metallurgy and the treatment of steels be clearly understood. Reference to various treatises on steel-making—metallurgy in relation to the proper heat treatment of metals—will demonstrate that for many reasons few, if any, have presented the fundamentals of steels and their action in general gun-making. Therefore, these chapters have been dedicated to the task of dealing with that subject in simplicity, for three reasons: First, because there is an apparently widespread demand for such information in readable form. Second, because to educate properly is to present the fundamental facts first, and let the arbitrary details be relegated to their relative position in the technical background. Third, we have been accused of not saying enough in the second volume of *The Modern Gunsmith* about steels, their treatment, and their relation to the gunmaker's art by hundreds of enthusiastic home craftsmen and shop mechanics.

We did not understand at first that this subject was of such vital interest, and even when writing what we did upon the subject, five or six good reasons for eliminating those chapters completely occurred to us; but what was written only whetted the appetite for more, it seems; for we live in an age in which metals of all kinds play a major role in industry. Gun enthusiasts are divisible into two distinct classes: those who are capable of comprehending the fundamental principles of metals, and those who are not. The first class, who are the minority, entered into our mind at the time the large volumes were written; but the second class were never considered, even though they were the majority, for we thought that any explanation in the matter of heat treatment of steels would be wasted upon them. We have learned at last that it is the latter class who really need considering, for it is these men who are bewildered about the fundamentals of metallurgy, especially in the proper treatment of their gun barrels when shots will not group in the center of the ten ring. Metallurgy, in all its branches, has a sort of influence upon all shooters who are more or less mechanically minded. It would take volumes to define all the details so that the layman could really understand, but if a young man understands some of the elementary principles of metals, he is already far above those in the mechanics class.

Iron Rust and Its Value—You all probably know that the yellow stain often seen on the banks of a running brook, and around the edges of a spring, is iron in a state of rust; and when we see rusty iron in other places we generally think, not only that it spoils the places it stains, but that it is spoiled itself—for rusty iron consists of ferric hydroxide, an oxide formed by corrosion.

Iron in such a state of rust cannot be employed for most of our needs; and because we do not care to use a rusty gun barrel instead of a highly polished one, we imagine rust to be a great defect in the metal from which it is made, and conclude that gun barrels should be made from steels which are not subject to rust. But this is not the case; on the contrary, the most useful quality of steel is its tendency to get itself into that condition. Rust is not a fault in the iron, but an accomplishment; for in that condition it fulfils its most important functions in the universe and its most useful duties to the human race. We may say, indeed, that iron in a rusted state is Living; but when melted, and when a specimen is removed from the bar and polished to explore its structure, it is Dead.

In the mixed air that we breathe, the part which is so essential to animal life, as you know, is oxygen. The nervous power of life is a delicately arranged structure, but the supporting elements of the structure cannot be nourished without the help of oxygen. The air we breathe is the very same air which the iron breathes when it gets rusty. It takes the oxygen from the atmosphere as eagerly as we do, although it uses it differently. The iron keeps all that it gets; we, and other animals, part with it again; but the metal absolutely keeps what it has once received; and the yellow oxide which we so often despise is, in fact, just so much pure iron,

in so far as it is iron and oxygen combined. The main service of the iron and all other metals, to us, is not in making guns, tanks, cookstoves, and hunting knives, but in enriching the ground we feed from; for iron constitutes 4½ per cent of the earth's crust, and is one of the various substances, in the form of oxides, that are most needful to our very existence. All these are nothing but metals and oxygen—metals with oxygen put in them—but they are in such a disintegrated, unrecognizable state that the unobserving person will never detect their presence. Sand, clay, lime, and the rest of the earths—potash and soda, and the rest of the alkalies—are all metals which have experienced this vital change, and have been made fit for the service of man by their permanent unity with oxygen.

Is there not something significant in these facts, considered as one of the lessons furnished by inanimate creation? Here we have our hard, bright, cold, lifeless metal when made into steel—good enough for guns and battleships, but not for food. You may think that iron is wonderfully useful in its pure state, but how would we react if all the fields, instead of growing grass, grew nothing but iron nails? Or if the whole earth, instead of being rich with green forest between the level fields as far as the eye could see, showed nothing but the image of a vast furnace district like that around Pittsburgh—a globe of black, lifeless metal? It would be that, if the elements of which it is made did not breathe the oxygen from the atmosphere. And as metals breathe, the crusts of the harder substances naturally fall into the class of oxides, or dust, planting themselves again in the earth from which they are extracted for our commercial uses.

Steel Alloys—Thus far the same interest attaches to all the physical elements of which steel is made; but now a deeper interest attracts our attention to another element—carbon, that which gives steel its hardening qualities. The addition of carbon to iron wrought revolutionary changes in the art of steelmaking. It was in 1000 A.D. that the charcoal hearth process of making iron brought to light this effect of carbon—followed later by a carburizing process in which charcoal was used to give steel its desired carbon content. Whenever an analysis is made of steel of modern manufacture, the elements listed below in their proper order are usually found, with their functional value and their effects when incorporated in steel.

IRON

Found as a metal in meteors. Occurs as iron ores; namely, hematite, magnetite, limonite, siderite, etc. It constitutes 4½ per cent of the earth's crust.

CARBON

Found in wood, coal, graphite, diamonds, and is a vital element of all plant life and of all animal bodies.

Used extensively in the form of cast iron, in steelmaking, and in all organic chemical compounds; namely, dyes, flavors, gasoline, etc.

It is steel's principal hardening element (except those of an alloy content). It is the most vital element which gives steel its qualities of hardness.

MANGANESE

Found as manganese ores, and manganiferous iron ores.

Used in steel-making and in glass-making.

It has strong hardening features, giving steel its toughness and great wear resistance. Our best rifle barrels are made from manganese steel.

NICKEL

Found as sulphide ores.

Used in steel-making, cast iron, nickel-copper alloys, magnetic alloys, etc.

It has great toughness, hardenability, and corrosion resistance.

It is the alloy which gives steel great strength and fatigue-resisting qualities.

CHROMIUM

Found as chromite, etc. All chromium ores are oxides.

Used in steel-making, in cast iron, chromium plating, tanning, and in color and paint pigments (chrome yellow, etc.).

In steel it has stainless properties, heat-resistance, abrasion-resistance, and hardenability.

MOLYBDENUM

Found as molybdenum sulphide and calcium molybdate.

Used in steel-making, cast iron, paint pigment, and for plates and grids for vacuum tubes.

It gives steel a high-temperature hardness, and hardenability in the annealed state. The barrels used on the Garand automatic rifle are made from a steel with a molybdenum content, known as S. A. E. 4150. The amateur should avoid using this type of steel for rifle barrels, because of his inability to secure a satisfactory finish to the bore.

SILICON

Found in sand, quartzite; in fact, 7 per cent of the earth's crust is this element.

Used for making glass, Portland cement, carborundum, etc., as compounds.

Used in the making of steel, and in cast iron as a dissolvent element.

In steel it is a deoxidizer, and is gifted with special properties. Basic open-hearth alloy steels usually contain between 0.15 and 0.30 per cent of silicon. Electric and acid open-hearth steels usually contain 0.15 per cent of silicon as the minimum range.

SULFUR

Found in its pure state; also found with iron (pyrites) and in other minerals.

Used in making free-cutting steels, gunpowder, rubber, lubricants, bleaching compounds, sulfuric acid, etc.

In all alloy steels it is generally considered an im-

purity; when used in a free-cutting steel up to 0.30 per cent, it raises the value of the metal's machinability.

PHOSPHORUS

Found in phosphate rock (calcium phosphate). It is also an important constituent of bones.

Used to make fertilizer, and in free-cutting steels.

In all alloy steels it is considered an impurity, and when found in large amounts it lessens the ductility of steel; but when used up to 0.20 per cent in rust-resisting steels, and in the presence of copper, it resists the effects of weather upon the metal.

COPPER

Found as metallic copper, as sulphides, and as an oxide.

It is one of the metals most widely used in pure form. It is used in steel, coinage, household and industrial uses, copper plating, etc.

In steel it has corrosion-resisting properties, and is used occasionally in certain grades of steels as a hardening agent, and when 4 per cent is used, it produces very effective hardening results.

ALUMINUM

Found as the mineral "Bauxite," which is the commercial name of this metal. It is also found in clays and rocks in a very wide range throughout the world as a metallic element.

When used up to 1.50 per cent in steel it is an alloy for surface hardening by nitrogen—in a furnace constructed for that purpose. It is also alloyed with copper. The oxide is used as an abrasive and as a refractory.

In steel it is used as a grain refiner and as a deoxidizer.

TUNGSTEN

Found largely as an oxide compound, calcium tungstate.

Tungsten steel is the steel *par excellence* for cutting other metals, and is known as high-speed tool steel.

Used for lamp filament, it is made into wire by drawing it through diamond dies as small as 0.0005 inch.

In steel it has many special uses. It also provides stability at high temperatures. Some of our best reamer steels are of a low tungsten content.

VANADIUM

Found as various oxides and as sulphide ores.

Used in steel-making. It is a toughening agent and refines the grain size of steel; when used in a larger percentage it is a hardener.

In this slight review of the functions of the alloys of modern steels, it will be observed that they all impart a strengthening power to the metal. Thus nickel, added to steel, raises its strength without sacrificing its ductility, and intensifies the effects of other alloy elements, particularly chromium. Chromium raises the ultimate strength, and gives steel its hardness and toughness, thus keeping grain growth down to a minimum. Molybdenum raises the ultimate strength, hardness and toughness, and, like chromium, minimizes grain growth at a high normalizing temperature. The tables of the S. A. E. numbers will be found in Chapter VI, Volume II, and should be used as a reference in connection with this table of information.

But the most important point to remember is that the oxides would never have existed had it not been that the oxygen first turned them into dust. The pure alloys have no special part in steel-making, and they never occur in nature at all except in meteoric stones fallen from the skies. In the necessary work of preparing the nation for war, great tonnage of steel is used; but if the alloys in the form of oxides had never breathed the oxygen from the atmosphere, we would still be using cast-iron cannon, cast-iron rifle barrels, and wooden ships would still be upon the seven seas.

Problems of the Metallurgist—With the discovery of the alloys the steel industry moved rapidly forward, and following in its path is the shadow of obsolescence, creeping over and obscuring the weapons and ships of yesterday's hope. The nation and its weapons may both be obscured if either fails to keep pace with the needs of warfare. Yet, our nation has within its power that which will prevent it from falling behind—the vision to penetrate the darkness, see what is ahead, and adjust its pace accordingly.

Today the science of warfare is in the spot-light, bringing about recognition of its importance. Upon the shoulders of the metallurgist, mechanical engineer, and research engineer falls the burden of the responsibilities accompanying this recognition. It is their task to demonstrate their ability by improving the products of which they are the masters. Their success will be in proportion to their vision.

The metallurgist, the mechanical engineer, and the research engineer are as essential to modern industry as the engine is to the airplane. But, unless modern industry can be made to appreciate the value of the "engine to the airplane," the shadow of obsolescence will fall upon all three engineers.

Therefore, upon all three rests the further responsibility of convincing the war industries of their value, by the intelligence they display in solving the heat-treating problems of those industries. This task will be less difficult if they will avoid complex explanations of "phenomena" pertaining to engineering problems in their contacts with army officers and perhaps with more inexperienced men at the head of some particular war industry. This can best be done by the application of logic, because logic is simply fundamental "horse sense" in any kind of language.

CHAPTER III

Gun Barrels, Their Steels, and a Safety Analysis

CLASSIFYING S. A. E. numbered steels, and explaining to gun hobbyists and sportsmen in general how one differs from the other, is almost as difficult for the metallurgist as classifying the human race is for the psychologist. Like human beings, steels follow the same master pattern; their variations in physical detail merely reflect the influence of progressive scientific development.

Gunmakers, like psychologists, may agree on the fundamentals of their professional problems, but few agree on their solution. Therefore, while the number method used by the S. A. E. to classify steels and their approximate heat treatments may not be agreed with in detail by those who have to work out their individual heat-treating problems, it is felt by that society that the clarity of its method justifies its use by the nontechnical reader. The difficulty is amplified by the fact that it is necessary to deal with problems correlating metallurgical fundamentals with traditionally established coined words, trade names and phraseology which, in themselves, are sometimes more descriptive than accurate. Every attempt has been made to set forth the classification and subdivision of various steels and their approximate heat treatment for industrial needs in a sufficiently broad manner to permit different opinions and authoritative views to be given their due recognition. It is not the purpose of this chapter to pass judgment on the firearms manufacturer, or to agree with any specific statements the steel-makers may make. Rather, our purpose is to accomplish the essential function of any educational text, namely, to present the law of safety limits in a gun barrel to the sportsman (who is not usually at fault when a gun barrel blows apart) in an interesting, nontechnical form.

In attempting to classify the various barrel steels used by the gun manufacturers, many complications arise, due to the large number of companies making firearms, not only in our own country but in Europe. This is true, even though one grade of steel is used for all calibers by the makers of firearms, as in the case of the U. S. Springfield Armory before the Garand automatic rifle was placed in production. However, it is believed that this chapter and the next one will clarify the subject for the sportsman and give the gun manufacturer material for thought.

It is not too much to say that the founders of the great arms companies of the United States, the names of which are now household words throughout the nation, were all amateurs at one time. In the days when those companies were formed, steels were just steels to them. When they purchased a piece of steel, they expected nothing more than a piece of chisel steel, tool steel, spring steel, machinery steel, and all of the poorest grades. But today more than a hundred different S. A. E. steels are listed. From these are selected about forty different numbers that are used in the automotive industry alone. Many of these are of the finest quality, and have given us certain standards according to which we may now select our steels for the making of the various component parts of our firearms. There is a reason for the selection of each kind listed in the *S. A. E. Hand Book*. Some steels give greater strength (as we have already proved) for actual weight, others will not corrode when exposed to the powder gases or to the elements. There are special alloy steels which, after they have been given the proper heat treatment, show no wear after long use.

In order to obtain the best in steels for the manufacture of firearms components, including gun barrels, or for that matter any of our industrial needs, the assistance of a metallurgist from one of our leading steel mills should be sought. Such men are willing to assist not only the sportsman who may have only a small experimental gun shop, but also the large industrial plant; for he will be able to assist both with the proper selection of steels and with the solution of all heat-treating problems; also to advise regarding all special requirements for individual parts, if practical.

Defective Gun Barrels—Unfortunately, I cannot help casting my memory back over the number of high-velocity gun barrels I have seen blown apart, and the shotgun barrels and actions which have been set before me split open from ahead of the chamber to the muzzle. Many of these accidents were due in part to the sportsman's carelessness; some of these guns which blew apart, however, had defects that were readily found in the metal itself.

Such blemishes existed in many gun barrels made

less than a century ago, and there must always be a few guns whose defects will never come to light until an obstruction is lodged in the bore, unknown to the shooter. Perfection can exist only in the imagination; and doubtless an exploding gun barrel either kills or seriously injures its owner. Yet a chemical analysis of the defective metal will prove that it had been considered safe: it contained the requisite amount of carbon, manganese, silicon, and not too much sulfur or phosphorus. But, just as

Fig. 3
The slag elongation in the direction of which Damascus, stub twist, wire twist, etc., were welded. This is the reason why so many of these barrels go "bad" when a heavily loaded cartridge is used

many a sportsman mingles for years with his associates, his character unrevealed, until suddenly he is found to be "bad," so this gun barrel is found to be bad inwardly and outwardly. The chemist had made a thorough chemical analysis of that particular heat of metal at the mill, and appeared to have fulfilled his duties faithfully. But place the bad barrel under a metallurgical microscope, and then the exact reason for its failure to perform its duty becomes as clear to the trained metallurgist (the man who studies the internal architecture of metals) as it does to the physician that the poison found in the stomach of a lifeless patient was the cause of his death.

Let us suppose that, after the barrel burst in the hands of the sportsman, we have removed from the breech a small specimen, and formed it into a ½-inch cube.

After cutting out our specimen with a hacksaw, we finish-grind one side, and mount it in a piece of bakelite one inch in diameter by three-fourths of an inch in length, and then the ground surface is highly polished. The polishing operation consists of removing all grinding marks by the aid of various grades of fine emery paper, starting with grade number 1 and finishing with number 4/0. This last is a hand operation, and is followed by a buffing operation on a vertical metallurgical polishing machine, in which a very fine kitten's-ear buff is used charged with a very fine polishing compound. Of course, the side of the specimen that is polished is the side in which the steel bar has been drawn, and which would naturally be from breech to muzzle, i. e., lengthwise of the tube. We are now aware that the surface of the metal appears in its best clothes, so to speak, without a spot or a minute scratch to mar the mirror-like surface. It is like the ordinary target shooter whom we meet occasionally at Camp Perry—at times one can hardly recognize him. Shooting clothes have been removed and he is clean shaven and dressed in his best. This part of the barrel, in other words, is difficult to recognize without its external coat of blue.

Although a specimen of polished steel appears quite homogeneous to the unaided eye, microscopic examination of a polished surface which has been lightly etched with acid shows the internal structure to be complex. The study of the internal structure of metals, and the effect of such structure on the properties of metals, is the science of metallography. The use of the microscope is not the only means by which the structure of metals can be studied, but it has been one of the most effective.

Before the cube of barrel steel is ready to have its picture taken, it must be given an etch to make the structure visible under the microscope, in order that we may examine the nature of its internal design. As the old-fashioned commercial photographer so often suggested, we are asking it to "Look natural, please."

The treatment consists simply in subjecting our specimen to the action of a chemical compound which attacks the different components of the metal; in short, we are immersing the face of the specimen in a solution of nitric acid and alcohol for a few seconds, usually between eight and twelve seconds. This is known to the profession as the 5 per cent nital etch. The solution first attacks the junctions of the different crystals in the metal, and then the crystals themselves, coloring some brown or black, but leaving others white. The cube has now lost some of its polish, but the whole framework or structure lies plainly before us. To the sportsman or layman the polished surface of the

metal shows practically no change, though it is a little less brilliant, and a slight grayish appearance is visible to the unaided eye.

To elaborate further: The structures of steels are found to be closely related to their physical properties. The study of structure is, therefore, useful in determining the practical applications to which the steel may be subjected. Even when the relationship is not completely understood, satisfactory performance sometimes can be associated with *suitable* structures, and unsatisfactory performance with *unsuitable* structures.

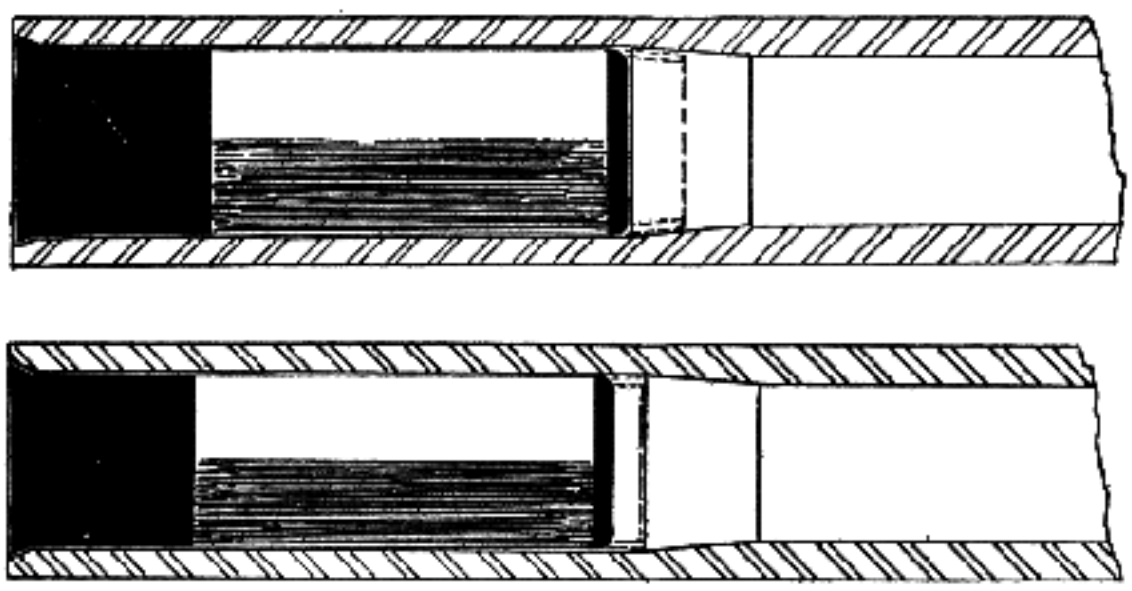

Fig. 4

Top—The position of a 2¾-inch shotgun cartridge in a 2½-inch chamber. The dotted lines show the crimp as it opens out into the cone

Bottom—The correct position of a 2¾-inch cartridge in its proper length of chamber. It is also the cause of many of the old guns' going "bad"

In order that we may detect the suitable and unsuitable structures of our barrel specimen, we must be aided by the microscope. Through a number of lenses and prisms from the objective to the binocular eyepiece, the metallurgist can look at this piece of barrel steel under a linear magnification of from fifty to three thousand diameters. This means that a spot measuring 0.010 of an inch across, and to be explored by the 100 × objective piece in position, will appear one inch in diameter to the eye of the observer.

A picture can be now obtained, if desired, in the usual technique of photography by throwing the image of the structure upon a photographic film in a camera attached to the microscope.

Examining the photograph thus taken, we notice light and dark areas, the former pure iron or ferrite, the latter pearlite, named from its resemblance to mother-of-pearl when seen through the microscope for the first time. We shall not linger here with ferrite and the other technical names of steel's chemical composition, but shall leave them to the metallurgist, for they will be of no further use to the sportsman or gunsmith, except that they may create a desire to study the subject. Those who are interested will find many books that will give them all this information.

We do not intend to convey the idea that all prevailing ills in gun barrels may be viewed through the microscope. Gun-barrel steels should be left to the metallurgist and his indispensable etching compounds, for today he is able to detect all the sins of barrel steels at the mill before they ever reach the gun manufacturer. Of course, he may not detect a few tenths of 1 per cent of sulfur or phosphorus which may make a barrel go bad. A seemingly small amount of sulfur will make a barrel steel brittle if worked hot, and phosphorus will cause it to fracture from a sudden shock, as in the case of an overloaded cartridge when the barrel is cold. These two, sulfur and phosphorus, are the two evils that the metallurgist attempts to keep down to a minimum at the steel mill if the steel is to be classed as "good" barrel steel.

Neither do we wish to convey the idea that all barrel steels are bad, nor that all fractured gun barrels are due to faulty bars of steel. Let us suppose, for the sake of illustration, that a bad bar of steel occasionally slips in among the good ones. That is the one to be dreaded, not only by the steel manufacturer, but by the maker of firearms. For after it has left the mills there is no possible way to distinguish this physically incompetent bar of metal or its source of weakness, and it may never be detected during the process of manufacturing the barrel. If the defective bar is not discovered by the barrel-maker, and is allowed to pass through all the sequence of operations to which a gun barrel is subjected, it will finally appear in the complete rifle or shotgun. Our modern inspection methods are so efficient, however, that such a bad piece of steel is seldom found in a high-velocity rifle; for rarely does one ever survive the final stages of its operations without being detected either by the inspector or by one of the machine operators. But there is still a million-to-one chance that a bad bar of barrel steel may never be detected.

Danger of Altered Barrels—A high-velocity gun barrel, after being properly heat-treated, should stand a pressure of 130,000 pounds, or 65 tons, to the square inch, before the yielding point is reached; whereas, the maximum established pressure of a high-velocity cartridge in the Model 1906 class is but 26 tons per square inch. This surely gives a good gun barrel a great margin of safety. But on the other hand, if the caliber .300 magnum cartridge is chambered in the U. S. Model 1917 Enfield rifle, meant for the caliber .30-06 cartridge, the change is very apt to make a bad gun barrel blow open, particularly if the metal should contain any small pipes,

segregations, or abnormal changes in the structure of the metal from the surface to the bore near the breech. Perhaps many such rifles have been changed over to use the more powerful cartridge? Those making such changes may not know that the steel produced at the end of the First World War was not so carefully selected as gun-barrel steels are today. Those who have changed such guns are creatures of infinite limitations, limited by their health and sex, and their incomplete education in handling firearms. Of course, to that class, a certain range of sentiment comes along with one of those guns, especially if it was bought in the days when it could be purchased for $7.50. Now that the sale of all arms and ammunition has been discontinued by the D. C. M. (Director of Civilian Marksmanship), the sale of all military rifles should remain closed to those who must be continually changing calibers on this class of weapons; and those who already possess such made-over guns should be ready to reserve a room for an indefinite period in some hospital—or space in some cemetery.

Your guns, however, are not to remain in a state of inactivity because you may think them unsafe or inaccurate after glancing over this and other chapters. On the contrary, it is only necessary to recall the fact that the makers of firearms today eliminate all defective material by a thorough inspection in their laboratories, which proves that the mastery of gun-making is quite complete. Upon rare occasions, carelessness may enter into the making of a rifle barrel, causing it to be inaccurate, even as carelessness enters into the lives of those who use them. It is not enough to be acquainted with the facts as stated, for gun knowledge only begins when the character and behavior of metals are known to the sportsman. The sportsman should also know that all steels selected for gun barrels must be given the proper heat treatment, not only at the mills where they are made, but also after the barrel has been forged and straightened; for it is then again scientifically heat-treated for the proper hardness and machinability, so that, when completed, it shall have strength where needed.

Requirements of Good Steel—It now remains for us to direct our attention to the fact that, among all thoughtful and experienced gunmakers of the past half century in the United States as well as in Europe, no phase of firearm construction has been the subject of more forethought than the producing of accurate rifle barrels. Gun barrels have been made as inclination dictated, often from the free-cutting steels which were used in the black powder days, and at the present date upon cheaply made caliber .22 boys' rifles. They have been made of every known chemical composition in which 3½ per cent of tungsten was part of the content, alloys of which have played the major part since the First World War with a view to securing a tough steel for the service of the sportsman. But this fact should never be forgotten: That while regular shotgun, rifle and revolver steels will bear strains of more than 50 per cent against excessive loads in a cartridge case, they will expand and blow apart whenever a slight obstruction has been accidentally left in the bore. Whenever a gun barrel is severely strained by the effects of an obstruction, if not blown apart, it loses that degree of safety, for the molecular structure of the metal has been changed and so injured that the final bursting of the barrel is but a matter of time. This is especially true of a gun barrel in the high-velocity class. Whenever a shotgun has been found to be badly strained in the breech action, or bulged in the barrels, the whole gun should be destroyed in justice to those who may incidentally use it.

The requirements of a good barrel steel today, whether used upon a rifle, shotgun or target revolver, call for special physical properties, namely, tensile strength, yielding point, elongation, reduction of area, and the necessary hardness governed by the machinability of the metal. For the hardness inspection, either Brinell or Rockwell standards are accepted; but we prefer the Rockwell instrument to take our hardness tests upon steel specimens, mainly because of its simplicity and the direct hardness readings upon a dial.

To secure all these qualities in a gun barrel, it is necessary to select our steel from the list of the S. A. E. (Society of Automotive Engineers) standards, specifying electric furnace steel of airplane quality. This may serve to account for the fact that T-1350 would be the most logical material for the gun-barrel experimenter. It is manufactured by the Timken Roller Bearing Company, Canton, Ohio, and possesses all the desirable qualities in the physical charts, being a steel capable of taking a very fine interior finish, provided perfect cutting reamers are used. When desiring to use a nickel steel, we would naturally select 2350; or if not satisfied with a nickel content, we would select 3150, which is a steel of a nickel-chromium content; if a molybdenum content is desired, we select 4150, which will withstand shock and fatigue, but is a hard steel to work; that is, it is not a steel to remain stable after being heat-treated, nor, at times, can a good finish be secured on the surface of the bore. It does not always remain stable when slightly heated; that is, the structure of the metal will not remain set when a barrel has been fired a number of times, particularly if the barrel is of light construction, as I have ex-

perienced. I have very good grounds for believing that a number of such bars of steel as I have named are ordered from time to time by gun hobbyists who have small shops; if I am correct, they must specify that the bars thus ordered shall be heat-treated at the mill at a hardness of 28-32 Rockwell "C" scale.

In the manufacture of automatic guns, such as shotguns and rifles, one of the most important considerations is the selection of the proper grade of steel to permit the weight of the breech mechanism to be of light construction and at the same time assure adequate strength and wear-resistance for dependable performance. In addition, the steels selected must respond readily to machining methods and heat treatment; and good impact and fatigue strength are essential to withstand recoil from modern high-velocity loads. One great reason why we select 2350, a 3½ per cent nickel steel, for such types of weapons, is that the high physical properties of such an alloy steel are extremely useful in the making of such guns.

Fig. 5
Free ferrite or sulphide of manganese, which is often found in all types of steel. It is hard to secure a desirable internal finish when this is in evidence

There is hardly a steel used today, where strength and fatigue are the main issue, that is not an alloy steel. Common cast iron alone is too soft for any firearm construction. Carbon and manganese are the chief chemical elements for most rifle barrels (as we have already pointed out), but too great a percentage of carbon makes steel too brittle, whereas, too great a percentage of manganese makes it too hard to work. But with a slight addition of manganese over the standard practise, so that the chemical composition would read: Carbon range 0.45-0.55 per cent, manganese range 1.00-1.20 per cent, nickel range 1.25-1.75 per cent, the steel would be toughened remarkably for rifle barrels. The use of such a nickel-manganese steel in the making of special rifle barrels will mark the beginning of a new era of better accuracy, and of bullet stability over long ranges for target shooters.

CHAPTER IV

Gun-Barrel Stresses and Strains, and Their Treatment

PHYSICIANS are constantly warning us to control our diet, regulate our habits, have our teeth thoroughly examined three times a year, and consult them immediately when certain symptoms of serious illness are observed. Being human, we eagerly confess our loyalty to these warnings on our sick bed, and just as quickly condemn them as silly when our recovery is complete. Too frequently we struggle along, knowing we are not 99 9/10 per cent perfect, but do nothing about it until the doctor reaches our bedside, then go into a cold sweat when he whispers to the family: "Operation," "Hospital," "Stop worrying," "Be brave."

Regrettable though it may be, the same human frailty extends itself into the sportsman's and target shooter's activities upon the range. There it is referred to in theory as: unbalanced bullets, unequal powder charges, too great a headspace, unequal pressure of wood against the barrel, uneven bullet-jacket metal, variable winds, and a world of other faults mentioned in sporting magazines. Regardless of the number of theories expressed or the fact that they relate to gun barrels instead of the human body, they are all manifestations of the same human weakness. How often, in the firing trials of new guns, do the symptoms of coming or apparent "illness" go unnoticed or ignored in the hope that the barrel will settle down and "adjust itself"!

The first tangible indication of inaccuracy in a new rifle barrel often is its failure to keep target groups centered, yet careful observation may have indicated poor accuracy before groups really began to change. So in the outline of a gun barrel's accuracy problem it is well to start with the discussion of "stresses and strains" and from there lead to the manifestations which, if recognized, will often indicate the logical treatment of the steel's molecular structure to prevent any further poor shooting results. The metallurgist, like the physician, must have the knowledge which will constantly warn his patrons of the meaning of their symptoms. If a new rifle shoots poor groups, it does not mean "expected trouble"—the trouble already exists.

Normally, a study of the problems of stresses and strains in a gun barrel is conducted by considering, first, the cause of the barrel's failure to shoot good groups; second, the effects of such cause upon the shooter; and third, the results or the actual failure to secure good groups. However, it is believed that this chapter will have more practical value if this study is conducted in the reverse order; so we will begin by considering the "results" or the failure of the barrel to remain stable.

Why Gun Barrels Fail—Everyone interested in shooting, and in guns in general, is probably familiar with the fact that powder gases are converted into instantaneous energy when confined in the chamber of a gun barrel, after being created by a simple ignition agent—the primer. A cartridge is introduced into a chamber, an explosion occurs, a bullet is forced along its path, and velocity is transposed from a projectile at rest through a cylindrical engraved surface—the bore. This is an old familiar story, but the sequence of these actions in relation to each other may well bear further investigation, for it is upon this sequence that the first important variations of barrel accuracy hinge. A clear understanding of these conditions is essential if the shooter is to meet and overcome inaccuracy problems involved in shooting at targets over long ranges, even though heavy barrels are used.

Too frequently the barrel-maker is called in after inaccuracy occurs, and is asked to diagnose the case and point out the true cause of the difficulty. If he is inclined to be truthful, he can give an accurate account of the conditions surrounding the barrel's failure, together with a complete survey of the heat-treating conditions under which the steel had been handled. This should enable him at least to establish a starting point in the "circle of circumstances" in which the barrel's failure began.

This "circle of circumstances" prevails in the heat-treating department of the forge shop and, as the name indicates, is endless. It has its beginning, however, in the manner in which the barrel is forged, straightened and heat-treated. The problem of subjecting the barrel blank or forging to the proper heat and stress-relief treatments is one of major importance. This burdensome task must fall largely upon the department which heat-treats the barrels and other parts, both before and after the sequence of operations.

Forging and Heat-Treating a Barrel—It is highly desirable that we pause here to get a better understanding of the methods used in forging and heat-treating a rifle barrel, as seen in the forge shop of the Springfield Armory when at work on the Model 1906 barrel.

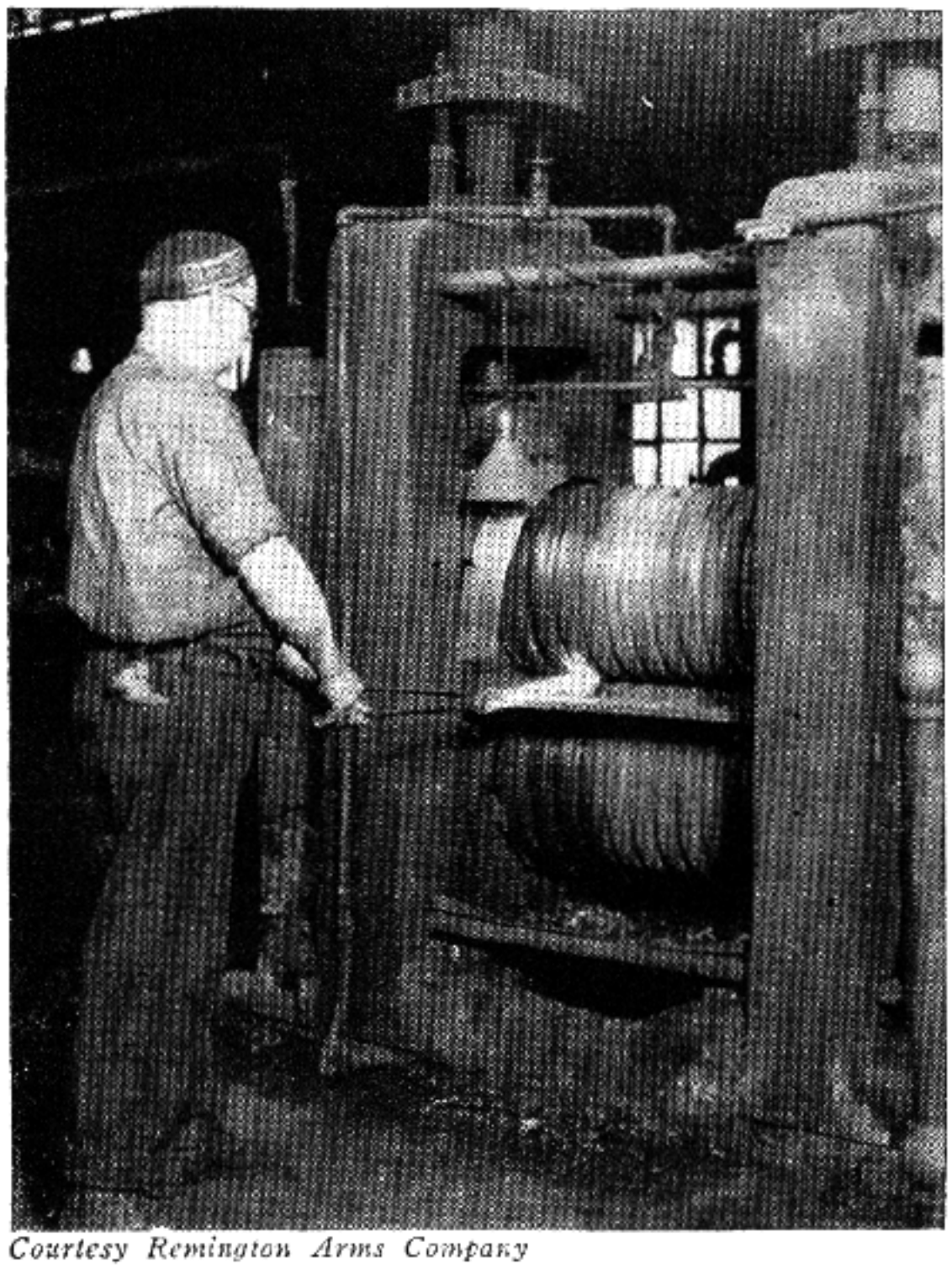

Courtesy Remington Arms Company

Fig. 6
The standard practise in all arms plants of forming a gun-barrel forging rolled from the hot bar of steel

A blank is first cut off a bar of W. D. 1350 steel. This blank, approximately 2 inches in diameter and nearly 10 inches in length, is heated in a furnace at forging heat. While hot it is passed through a rolling mill in which the two rolls carry a series of grooves or depressions cut in the upper and lower rolls, of which two are cylindrical and the balance tapered to conform to the contour of the finished barrel. This operation consists of passing the hot blank from one form to another until it is gradually lengthened out and emerges from the last depression of the rolls in the form of a rough gun-barrel forging, with sufficient material left on the outer surface for the turning and grinding operations. After being rough-straightened under a drop-hammer, the forgings are normalized at a temperature between 1600 and 1650 degrees F. in a furnace for a period of three quarters of an hour. They are then allowed to cool in free air.

Following the normalizing heat treatment, which places the structure of the metal in the best condition for the machining operations, it is heated between 1500 and 1550 degrees F. for one hour and quenched in oil, which gives the metal a hardness between 50 and 54, Rockwell "C" scale; removed from the oil, it is then tempered to the required machining hardness and tensile strength, at a temperature between 1060 and 1100 degrees F. by leaving it in the furnace for three hours or longer, in order that the proper hardness shall be even in the light and heavy sections.

To the inexperienced the forging or barrel blank appears exactly suitable to attach to the receiver when finished, but the metallurgist may detect some very unusual conditions in the structure of the

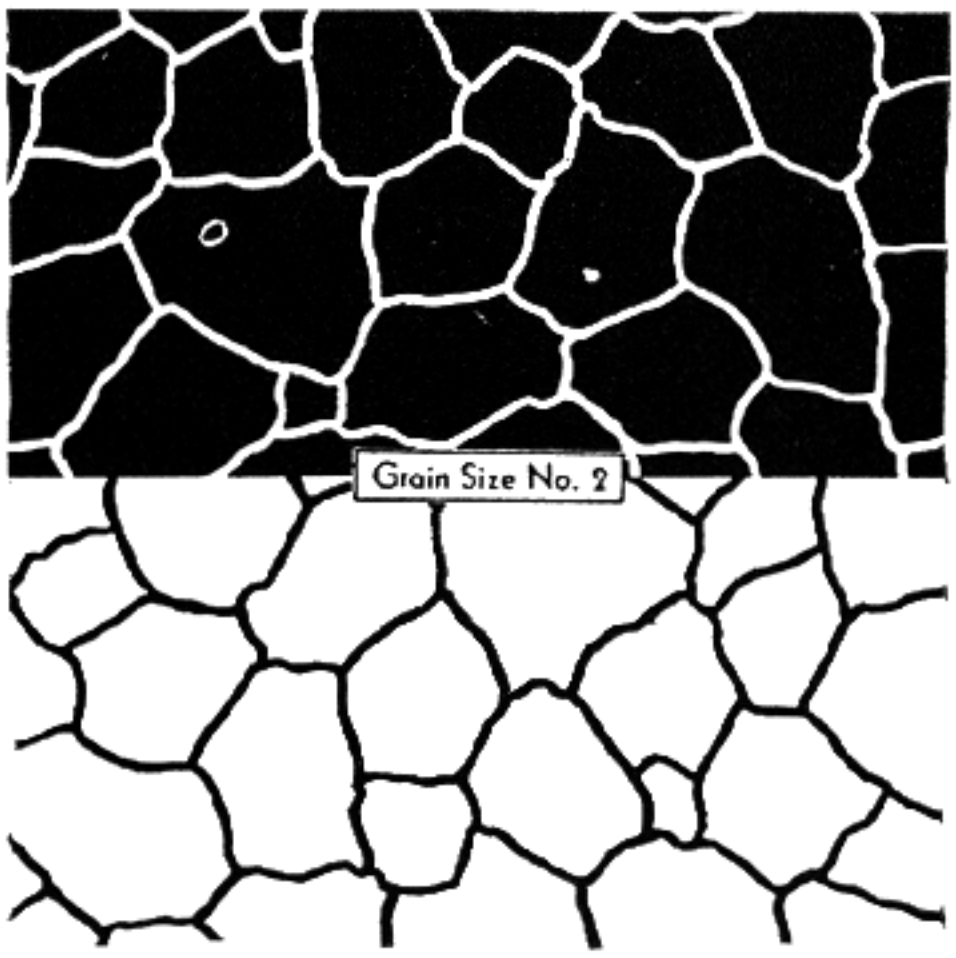

Fig. 7
Grain size Number 2

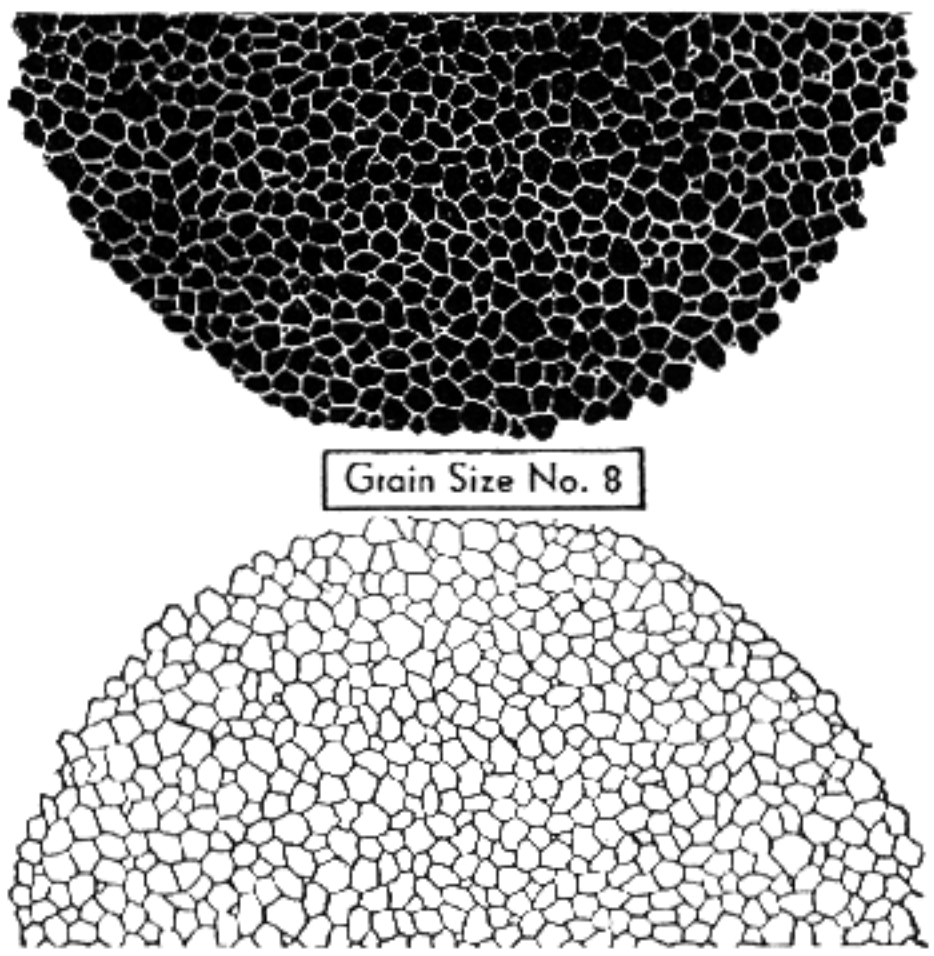

Fig. 8
Grain size Number 8

metal. He may find that the rolling operation was done at either too low or too high a temperature, causing the grain sizes to be much too large; and he may discover that the normalizing treatment did not correct this fault, for grain size number 2 appeared instead of size number 7 or 8. (Figures 7 and 8 illustrate this difference.) Experience has proved to the metallurgist that large grain sizes tend to absorb neighboring atoms into the structure. If a barrel were composed entirely of grains of the same size and arrangement, and of the finer sizes, all unstrained, then all the grains would possess equal vibrating tendencies and no changes of groups from such a barrel would occur. Therefore, the finest grain size and arrangement of the crystals should be in evidence, giving the metal toughness and strength in order that it may be able to yield at will during the passage of the bullet through the bore, and settle more quickly to a set position after each shot is fired, even though the heat of the powder gases and the friction of the bullet in its passage are the most illustrated factors controlling accuracy.

Stress-Relief Treatment—The mere effect of perspective observation is a powerful cause of illusion. It is better now to carry the romantic vision of the operations in the forge shop away with us, than to follow the barrels to the cold straightening operation. We cannot resist the temptation to suggest that barrel forgings should be straightened hot under a drop-hammer after coming off the rolls as nearly straight as possible, so that the straightening operation in a cold state may be eliminated; for if straightened cold, stresses and strains of the worst kind are likely to develop, and these are difficult to remove even by a stress-relief treatment. Such stresses will remain in the finished barrel for a long time, unless it is artificially seasoned by its owner.

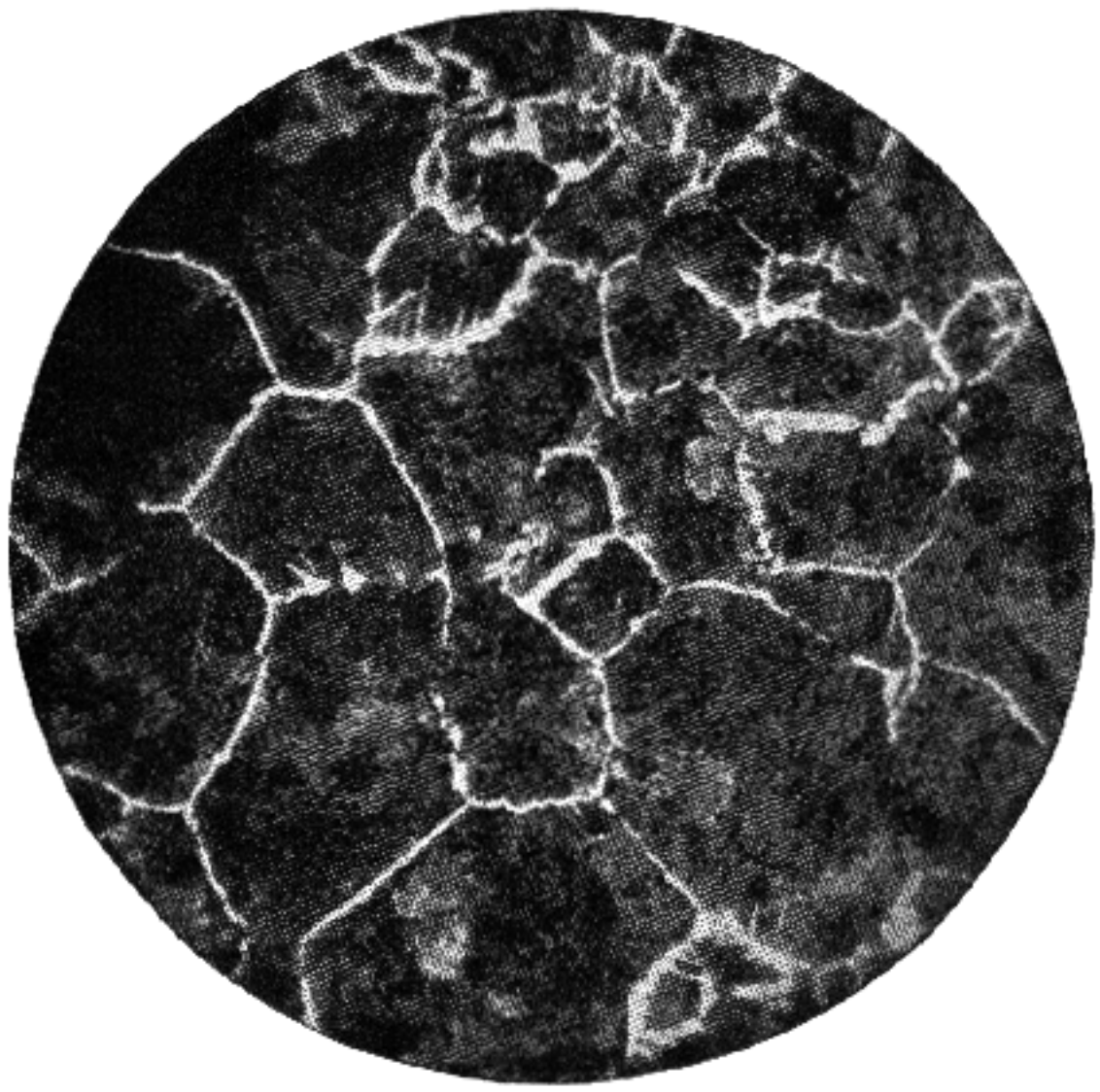

Fig. 9
Discovering the coarse microstructure in steel

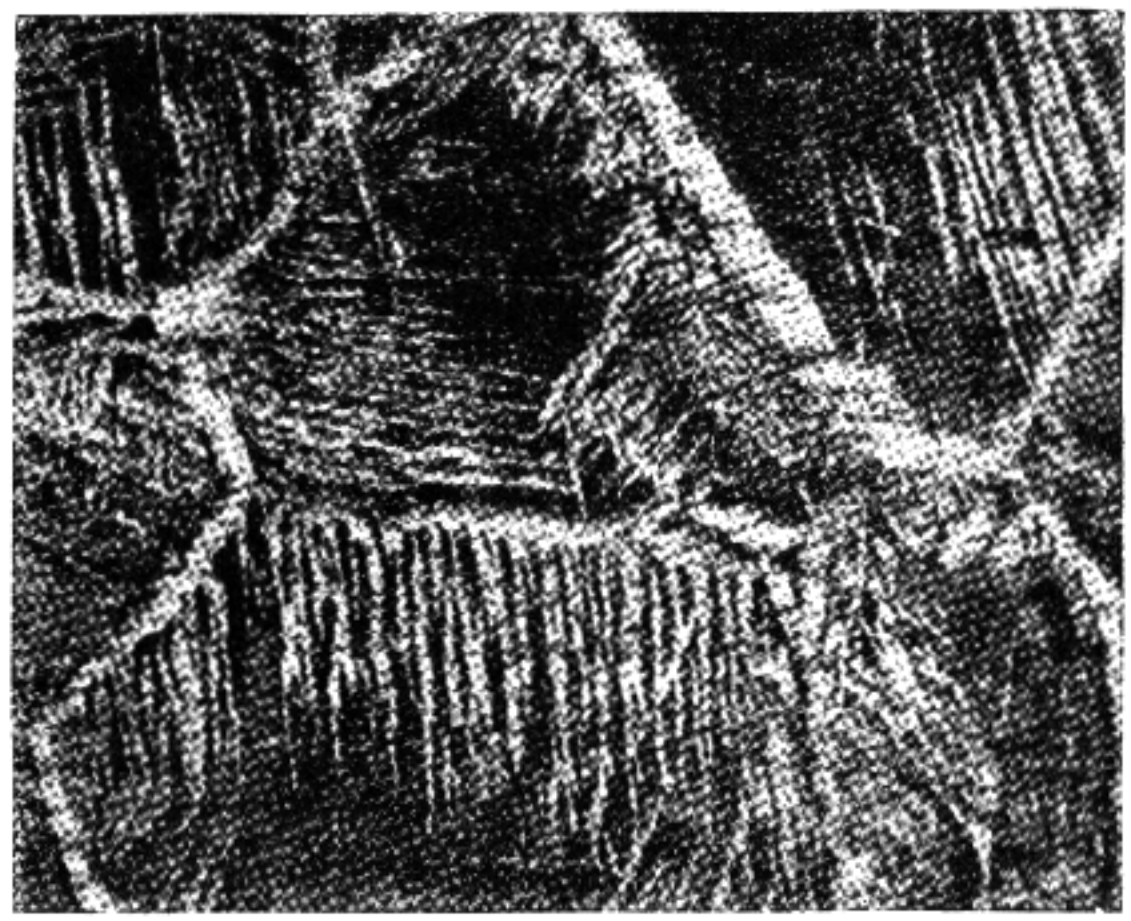

Fig. 10
The microstructure of overheated steel

Discouraging as it may seem, there are times when a shop has a run of bad barrels; they "crop up," and the defects are not discovered until the cold straightening of the forgings takes place. Those bent in the center are straightened in a special press in which a ram operated by air is used to remove the kink or bend, as the forging rests upon two V blocks. Should a number of such barrels require this undesired operation, it is natural to believe that they will continually change their center of groups when finished into completed guns. Strange as it may seem, these forgings are not now given a stress-relief treatment, though it would certainly seem desirable to do everything possible to remove the stresses and strains formed in the metal by this straightening operation, so that the steel would remain in nearly a certain set position regardless of the number of shots fired from the barrel.

A new gun, regardless of its kind or caliber, is often disappointing. All that we can reasonably expect is fair results, for the steel in all new barrels has a natural grain growth or tendency to grow larger and move in various directions, due in part to not being properly stress-relieved at the factory. Extensive experiments on this subject were made on the type-II Cummins injector bodies—length 5⅛ inches, and made from T-1350 steel without a stress-relief treatment—to secure a fair estimate of

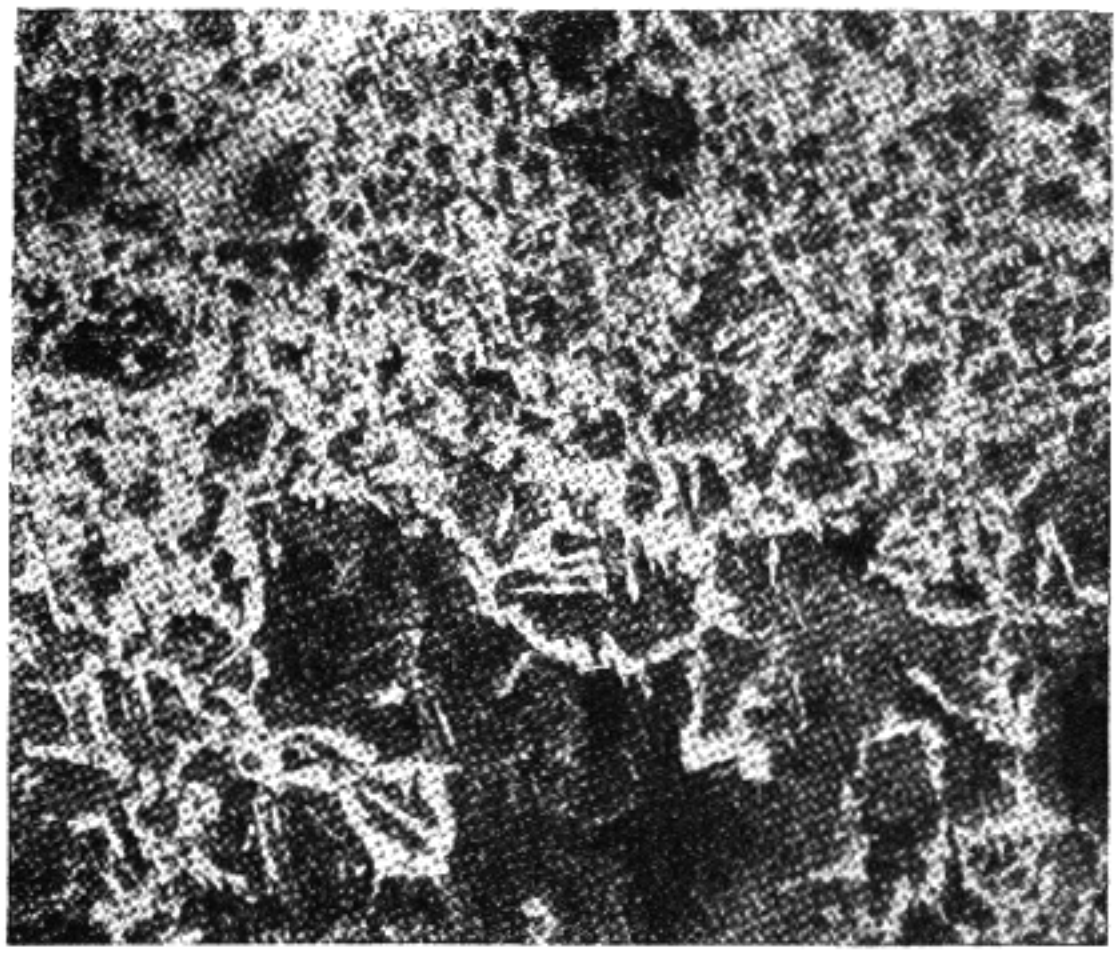

Fig. 11
The microstructure of steel showing incomplete heat treatment

the structural changes taking place in the metal.

The first course of these experiments required three weeks to find three near-perfect injector bodies out of 600 produced in that period of time, injectors in which the holes were without a blemish, and were straight, with gauges that were perfect according to a set standard. The holes in the three bodies measured 0.37520 inch, and were fitted with perfectly lapped plungers which measured 0.37500 inch; this allowed a tolerance of 0.00020 inch between body and plunger, and allowed them to drop through the hole in the body by their own weight at room temperature. The three bodies and plungers were placed at nine o'clock in the morning of December 5 in a holder which held both bodies and plungers in a vertical position in a room heated to 72 degrees F. during the day. At 4 P.M. of the same day, one of the bodies proved to have developed a kink which did not allow the plunger to slip freely through the bore without the aid of a ⅞-inch steel ball placed in the radius on top of the plunger. This body was marked number 1. On the morning of December 6, the second body, and also the third, now possessed bad kinks, which would not allow the plunger to slip through the bore without the aid of various-sized balls, some as large as 1½ inches; whereas, those two bodies had been perfect in the afternoon of the 5th. It may be mentioned that all three bodies varied in hole straightness over a thirty-day period; and to our surprise, body number 1 came back to its original straightness, while the other two continued in a warped condition. And the warp proved, from various experiments made, to be always in a spiral direction; that is, the indications of the warp were influenced to move in a spiral direction, proving that stresses and strains in steel are released in a spiral, and remain in that form even when time alone does the seasoning, whether in a gun barrel or in a highly finished hole in an injector body used on a diesel engine.

To obtain the proper results in an experiment of this nature, of course, the room temperature should be held to within two degrees above or below 70 degrees Fahrenheit during the whole twenty-four hours. Even though the experiments were conducted during the cold of early December, and a wide range of temperature existed, the fact is that they were carried out under about the exact conditions which a rifle would encounter in the hands of its owner. The tests also proved that there existed too wide a range of grain size of the crystals under the microscope; the grains were rubbing against each other in the entire length of the bodies, never allowing the atoms to come to rest. In order that the atoms may come to rest, the steel must be given a stress-relief treatment at a temperature between 200 and 400 degrees below the tempering treatment.

Other special tests which we carried out at the Springfield Armory proved that it required a pressure of 1100 pounds to the square inch to force a minimum bullet through a maximum barrel (tests upon Model 1906 barrels); whereas, it required a pressure of over one ton (2000 lbs.) to force a maximum bullet through a minimum barrel.

It is always a mistake to think that the barrel is a rigid body incapable of bending; it is very sensitive to stress movements—to the pressure of the explosion, the pressure of the bullet as it is driven along the surface of the bore, and the unequal outside pressure of the stock and the clamps that hold the stock to the barrel. To prove this, clamp your action and barrel in a milling-machine vise, or in a vise upon a solid bench, allowing the barrel to swing free in space, and then gently tap the muzzle with your fingernail. The muzzle vibrates like a tuning fork! You may not believe it, but the barrel will bend perceptibly under pressure which can be put on it by the fingernail. It is like any other metallic rod or tube. A gun barrel vibrates even when struck by the finger, but owing to its tapered sectional area, it does not have the same vibrations that are found in a straight metallic rod. When the seasoning treatment takes place (we shall come to that a little later), it is these vibrations that we are trying to control by a simple elementary treatment. The object is to allow the metal crystals, in their relations to each other, to be lubricated, so to speak, in order that they shall always return to their original positions.

From such a simple experiment it can readily be

seen that the shock of the explosion sets up all these vibrations much more forcibly than the fingernail. The whole barrel vibrates, most violently at the muzzle, less so at points near the breech, while the latter remains still, for it is the point where it is fixed—the receiver. The frequency of the essential vibrations depends on the design of the barrel and the metal allowed along its entire length of taper, for the fixed ratio of the vibrations is governed by the taper design. In all good barrels we find that the vibrations are evenly distributed along the entire taper, and the friction of the bullet does not exert such an influence.

Of course, the bullet, when shot in any high-velocity barrel, fits the bore tightly, makes a perfect seal between bore and bullet, and in doing so creates a high degree of friction during its passage. If there is any increase in the amount of force required to urge the bullet through the bore, the increased friction will naturally affect the metal, causing it to yield to a certain degree along the entire length of the bore before the bullet ever reaches the muzzle; for the vibrations travel much faster than the bullet. These vibrations, reaching the muzzle ahead of the projectile, naturally cause the target groups to vary in relation to the distance shot. In other words, the barrel's vibrations are a reflection of a controlling factor, and not a prevalent error.

If we follow a barrel after it has left the Pratt and Whitney gun-barrel drilling machine, we can readily see that unless it receives the proper stress-relief treatment all the strains in the metal will remain active and become greater as the rest of the operations are performed. It is important to bear in mind that the more the barrel is handled in the machining operations, the worse the strains will become. The removal of metal by the reamers, the engraving of the surface of the bore, the turning and grinding operations, all tend to release stresses and strains from the center of the bore to the outer diameter, causing kinks and bends to run in a spiral direction between bore and outer surface of taper; and all this tends to give a false impression between the fit of the bullet and the established tolerance in the bore. Whenever an extremely good barrel has been found—a barrel in which a 0.0002-inch tolerance has been established between the gauge and bore, and from breech to muzzle, without kink or bend, a hole in which a plug gauge five inches in length will slip through perfectly without binding along its passage—whenever such a barrel is found, you may be sure that it has been stress-relieved by the proper degree of heat in a furnace.

Seasoning a Gun Barrel—In a gun shot over a long period of time, the metal becomes seasoned by the expansion caused by the maximum bullets shot through the bore. The ever-present stresses and strains in the molecular structure of the metal have come to rest, and an artificial stress-relief treatment at this stage is, of course, too late to be given any consideration. Experience has convinced us that rifles and shotguns, if kept in use, become seasoned by time alone. Like good whisky, they improve with age; a rifle barrel improves with shooting—if it has proper care at the hands of its owner. A gun barrel will not really settle down to perform good shooting until a number of boxes of ammunition have been shot through the bore; and in many cases, the stresses and strains which were first detected in the metal will then have come to rest. But an artificial method should, in many instances, be employed to season a new rifle barrel if it is to be used on the target range. If a new barrel does have a tendency to be continually changing its center of groups, a "seasoning" treatment should be employed.

Every one who is acquainted with firing a high-velocity gun slowly, that is, three or four shots per minute, knows that the barrel can then be handled without fear of burning one's hand; but if fired as many as twenty shots per minute, it will blister

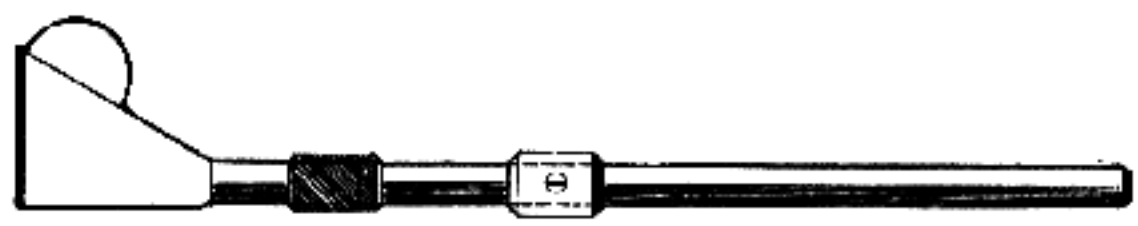

Fig. 12
A cleaning tube with funnel is an aid in the seasoning treatment

one's fingers, and above that number the barrel becomes very hot. One hundred rounds of high-velocity ammunition can be fired without any more injury to the barrel than a slight discoloration of the finish. To heat a barrel for the "seasoning" treatment by the use of ammunition, therefore, would be rather expensive; and it would be almost impossible to secure the correct temperature in a caliber .22 barrel to season it by this method. A more logical method is to use an electric furnace or a gas range, in which it is possible to encircle the whole barrel and regulate the temperature between 325 and 375 degrees F. Of course, whatever means are employed to heat the barrel, the rifle must be stripped of all its parts, and only the barrel and action left intact.

The only rational way of treating a barrel is to heat it, and we shall assume that the barrel has been subjected to the required degree of heat, either by some artificial process, or just by firing a number of shots through the bore to secure a barrel so

hot that the hand cannot touch it without fear of badly burning the flesh. If the latter method is used, the bolt must be removed, then water poured through the bore with the aid of a rubber hose containing a cartridge in which the end is drilled, and a piece of tubing soldered therein, long enough to clear the end of the action, or with the aid of a cleaning tube and funnel. Start the water through the bore very slowly at first, continuing until steam no longer forms, then allow the water to flow more rapidly until the outer surface of the barrel is really cold. In some cases it will be found necessary to apply this treatment as many as ten times in order to secure the results desired; but as a rule, three or four such treatments will produce unexpected results.

There is little to be gained by employing this seasoning process upon defective gun barrels, those made from bad pieces of steel, or those which have been straightened often during the sequence of operations. Neither do we recommend a seasoning treatment for an old barrel, or for a shotgun or a revolver; for in such weapons the human element enters into the picture too strongly. A shotgun must be considered as a "scatter gun," and to pour cold water through the bore would only remove the powder residue; for the slightest amount of set, if it could ever be measured, could never be noticed in terms of accuracy. As for a target revolver, even though it were placed upon the finest machine rest, and extensive firing trials were made and the results analyzed, there would be no results worth recording.

The habit of looking through rifle barrels has caused many sportsmen to find imaginary things, one of these being the straightness of the bore. The sportsman, by using his imagination, has never yet been able to discover a crooked or bent barrel, that is, a badly kinked one. Such barrels may outshoot the straightest barrel ever made. It is not, as many suppose, the crooked or kinked barrel which causes the most trouble: it is the one possessing unsettled strains in the metal; the unseen factors which are too great for the average person's comprehension, but often come to light after a few shots are fired by those possessing technical knowledge.

There are, of course, some unavoidable manufacturing conditions existing in all plants where firearms are made, and some defective gun barrels are bound to be found by those who are very alert—the best of target shooters. Were this condition to occur frequently, the manufacturer's final loss would be greater than his profit. But manufacturers are bound by necessity to inspect all guns made, and to make them capable of good shooting. If a new gun is only worth what can be shot with it, it is equally worth only the expense of energy to place it in the best of shooting condition, and a seasoning treatment will naturally earn that for any new target rifle.

CHAPTER V

Producing Finishes and Surfaces

LIVING with guns represents love for an art and a pleasure of a very high order. Every sportsman who purchases a firearm of any kind satisfies this desire by living, as we may say, in his own small world, for in mind he is often completely absorbed in antique arms of the past, or in gun design and progress of the present, thus developing a certain insight into an art which would require a lifetime for others who are lacking in this interest or even incapable of analyzing what he has gained in wealth—contentment of mind.

To a gun lover, one single hour among his guns at the end of the day is worth more than an entire day spent at golf, in business, a trade, or a profession. Looking for the secret of this curious interest and source of pleasure, we find that what this man really enjoys is the excitement produced by examining the finishes and surfaces of old and new guns, and by testing his imagination upon the methods used by men who made such works of art, yesterday and today.

It may be that the sportsman of gun lore is nothing more than the helpless victim of an irrepressible appetite, a person for whom intellectual gun intoxication begins as a pleasure and later becomes the compelling force necessary to make his whole life complete. Some may wonder why any rational person, finding himself sinking into such a regrettable condition in early life, did not receive some severe discipline, verging on the patriarchal or autocratic type, which would have compelled him to concentrate on the better things in life—automatically excluding guns. But, whether it be guns or fishing rods, those things which are capable of bringing him to the outdoors are the things which arouse such a young man's interest, quicken his enthusiasm, raise his energies above the dead level of mere animal existence—and help to make him a sane and intelligent man.

As no man can put new wine into old bottles, so no one can hope to put different beliefs into young men who are unable to enjoy life without firearms. That, at any rate, is what the study of the dyed-in-the-wool gun-minded enthusiast has taught us. If we have misinterpreted the recorded lives of sportsmen throughout the centuries, we have not done so with wilful intention.

Charm of a Beautiful Finish—Should finely designed and constructed sporting firearms be ranked among the world's art objects—things of beauty created by skilful craftsmen? Certainly they are objects of finished craftsmanship created with individuality and distinction. It should not be very difficult to give credit and honor to the gunmakers who so cunningly conceived and admirably completed the finishes on finely made guns, thus meeting the critical demands of those who select them.

Who can disregard the powerful personal element entering into the execution of the examples of beautiful gunmaking from the present day down to more than a century ago? Who can resist the attributes of elegance, the outstanding external finishes applied by hand work to steel and wood, which are revealed in such guns, and illustrative of the critical selection for those of our era? To the sportsman who may be a lover of choice guns, all such weapons speak with a strange, magical, and bewitching tongue. In all of them he recognizes the expression of genius, the creations of master gunsmiths, whether they be rifles or shotguns, or the accessories found in the leather cases which are so vital to the complete service of such weapons in the field. In such leather cases, whether old or new, the sportsman of appreciation sees the results of much forethought in designing proper cleaning equipment, and for the older arms the necessary loading tools; there, too, he sees the gun's form: the contour of the action, the sights, everything is there in finished outline, for the wood in the stock and forearm does carry rich pigments, beautiful streaks of brown and black, of twisted ripples seen only in gun-stock woods grown either in southern France or Italy, and finished by nature. Today, as yesterday, the growers of walnut trees in southern Europe cultivate their trees for gun stocks, obtaining the ripples or wavy form of "coon-tail effect" by wrapping chains around the trunks and allowing these to remain until the growth of the tree has embedded them to a certain depth, only to remove them and relocate them again between the old indentations to make the finishes complete when formed into a gun stock. After such trees are cut, seasoned and sawed out for stocks, the spiral-like streaks are to be found close together, and inter-

mingled with colors which can be finished only by nature's handiwork. The chains are the instrumental means of enhancing nature's finishes in order to please the senses of the critical lover of firearms.

We ought, nevertheless, if we desire to think accurately, to know that there are two separate senses in a sportsman, the first of which detects a thing finished, and the second detects it well finished, internally and externally. The first refers to the mere neatness and completeness of actual hand labor, as we speak of a well-finished gun, or the optics in a telescope; and the second is a sense which refers to the effect produced by the thing shown; thus we may call a high-priced British shotgun well-finished in all details, whether on the interior or exterior surfaces, because it produces the effect of reality on the mind of the observer.

The way we all really act with regard to the sensations produced by the appearance of finishes is this: A high polish on any of the essential working parts of a firearm, including the interior surface of the barrels, does not necessarily mean that all parts contain a good surface finish. Nor does it mean strength of surface similar to the much-abused expression, "mirror-like polish," a surface which one will judge very quickly by observation, for with the aid of the microscope one reviews all the marks of the workman's ingenious methods of securing a deceiving polished surface. Nor does it mean the usual lapped finish, that which we often see upon the interior surface of finely made shotgun barrels. A finished surface to any part of a firearm should mean that dull-appearing surface which will take a natural polish; for a surface which is not completely free of deep scratches and any tool's harmful effects to cause surface fractures will reflect light, and this in turn produces the effect of deceiving reality upon the observer, for such a surface can never be made into a "mirror-like polish." When a surface is viewed under the microscope, it should appear flat without any exaggerated superficial traces of "hills or hollows" such as are made by abrasive materials. Figure 13 shows a perfectly finished surface as seen under the microscope, without a scratch or a fracture. The small specks which the eye discovers are nonmetallic inclusions, but so minute in size that the metal is considered the best and of airplane quality.

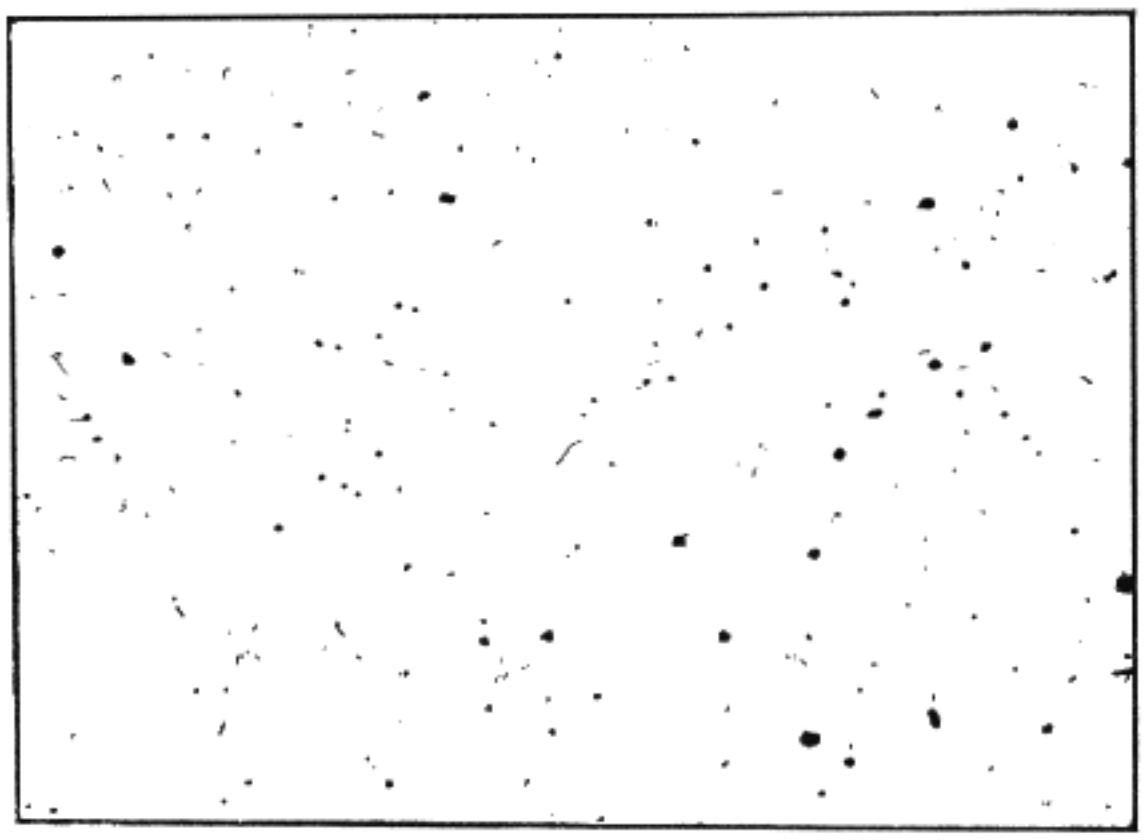

Fig. 13
A perfectly finished surface without a scratch in evidence: 100 X, unetched

Discovery of the Spiral-Fluted Reamer—Metallurgists, with the aid of their microscopes, have a great advantage over the toolmaker with his small magnifying glass to detect the faults of reamers, particularly straight-fluted reamers used for the purpose of reaming gun barrels. A common vice of straight-fluted reamers is the false impression they leave on the surface of the hole they ream, but the worst vice of all is their tendency to fracture the surface of the metal they ream to a depth between 0.003 and 0.007 inch; when such parts are hardened, there will appear, in many cases, surface ruptures and seasoning cracks.

Fig. 14
The spiral fluted reamers of 3/8 and 19/32 inch diameters

After this had been discovered, experimental developments were started on a spiral-fluted reamer to correct such faults (illustrated in Figure 14). Had it not been that the diesel-engine injector body required a highly burnished hole, a reamed hole in which all surface fractures had been completely eliminated to correct the vices of erosion and corrosion—a far better finish than that given to gun barrels—the special spiral cutting reamer probably would never have been brought to light.

This discovery required two years' study and experimenting on methods of securing a reamed hole which would be highly finished. After all other conditions had been attended to—the selection of the proper steel, heat treatments of the same, and stress-relief treatments—experiments were made on various types of cutting angles on reamers with a spiral cut in the flutes, using from one turn in 3 inches to one turn in 9 inches, and made with odd flutes. The odd flutes consisted of 3, 5, and 7 cuts along the circumference of the reamers, in order that no two flutes would be cutting from opposite sides and

hinder the efficient cutting of the metal in contact, having in mind to produce a chip from the cutting edges in a curled form similar to those produced from a well-ground lathe tool. Applying our thoughts to this purpose, we found at last that a spiral of one turn in 5¼ inches produced the effects desired, but to our surprise chips were removed in a curl-like form, and in lengths as great as 12 inches, from the diameter of a ⅜-inch hole in which only 0.002 inch stock was left for this reamer to remove. This meant that the cutting edges removed only 0.001 inch of metal from the circumference of the hole, proving also that whenever a 12-inch length of chip could be removed, the surface of the metal had not been fractured in the complete length of hole reamed. Whenever the interior surface of metal is left in such a state, it is possible to secure that "mirror-like polish" in any hole, especially when a scrape-reaming operation follows such spiral reamers; that is to say, by using spiral reamers for the roughing operations, the scrape reamers are capable of producing a perfect finish when viewed by the naked eye from each end of the hole.

There is hardly a reamer to be found today that is not a straight-fluted reamer, whether used for reaming a caliber .22 rifle barrel or a 16-inch cannon. The fundamentals of the cutting efficiency of the special spiral reamer will vary greatly in comparison to the work produced by the straight-fluted reamers, especially when we demand of the bore surface in gun barrels the best possible finish, and these requirements branch out to various industries, particularly in plants where airplane engines are made. To the minds of many, reamers are just reamers, without any practical thought as to their vices in a piece of steel; the reamer is only a tool to them, a tool which will ream a hole to a given size, without taking into consideration whether the parts reamed are subjected to fatigue, corrosion, or the stresses and strains in the metal which are released by a heat treatment, and which may rupture the surface reamed to a greater depth. Of course, straight-fluted reamers are used largely because of the ease with which they can be made in the average toolroom, and the cheapness with which the standard sizes can be purchased through tool catalogues. But whenever a part must withstand great fatigue strains, as in a gun barrel or an airplane-engine part, or where the parts may or may not be heat-treated later, regardless of the kind of steel used, a spiral-fluted reamer should be employed, in order that those parts reamed will not show any minute fractures surrounding the circumference of the hole. Today, there should exist some improvements in our antiquated methods of reaming, particularly in the reaming of gun barrels, of airplane-engine parts, and even of common engine parts in a motor car. The following rules, therefore, should apply in general:

(1) Avoid the use of straight-fluted reamers in all deep-hole reaming; namely, in small-arms gun barrels, heavy and light cannon, propeller and cam shafts, etc.
(2) Avoid the use of straight-fluted reamers on parts subjected to fatigue stresses and strains.
(3) Avoid the use of straight-fluted reamers on parts which may be subjected to erosion and corrosion.
(4) Avoid the use of straight-fluted reamers on parts which are to be heat-treated.
(5) Avoid the use of straight-fluted reamers in steel low in either Brinell or Rockwell hardness tests if perfect internal finishes are desired.

Since there are so many factors affecting the "fatigue limit" of complicated parts which contain a reamed hole, reamers must be selected which will reduce all serious failures which may be anticipated, especially in parts that have an important role to perform. The ability of steels to resist localized concentration of minute fractures, such as are usually found in the circumference of a reamed hole, may not be so great when the alloy steels are used, compared with steel found in the lower-numbered brackets; and whenever such steels are carbonized, the failures resulting are soon proven by the aid of the microscope. But, regardless of the steel selected for a given part, surface fractures usually appear in great numbers in certain concentrated areas of the metal, and usually increase in depth whenever a heat treatment is given to that particular part. Also, corrosive environments embed themselves in such fractured surfaces, and will appreciably shorten the life of any steel parts under fatigue stresses. The extent of the life of a rifle or machine-gun barrel depends upon the perfect finish within the bore, for powder gases have the ability to cut away the metal carbides between the crystals, thus leaving deep grooves in the structure of the metal, especially in the bullet seat, that location where the bullet enters the rifling. Contrary to the opinion long held by many metallurgists, we find that it is not possible to secure a near-perfect surface whenever the conventional straight-fluted reamers are used. A metallurgist has, of course, his own theory of what a reamer should accomplish in a piece of steel, but the choice and nature of the holes that are produced should not be matters of theory.

When a gun barrel fails—a barrel which has been reamed with the conventional type of reamer, and which has been subjected to the repeated strains and stresses of overloads of cartridges—the metal-

lurgist seldom looks for the minute fractures surrounding the circumference of the hole by cutting out his specimens from that locality, nor does he stop to think that the structure of the metal may have been damaged by the reamers during their passage through the bore. The usual explanation of such damage is that the steel was "crystallized" in the hardening operation. It is known by all metallurgists that metals are crystalline in nature; but failure would not occur so readily from the inside if some mechanical part had not contained hundreds of minute fractures, and hundreds to a depth greater than 0.007 inch. In the process of reaming steel, particularly parts which must be submitted to fatigue hardships, we are bound to eliminate all the internal minute fractures of the metal surrounding the diameter of the hole; and this applies not only to a gun barrel but to the largest propeller shaft used on an ocean liner. Clearly, the danger lies in the rubbing together of the crystals which are located around the ruptures, and which increase in depth by fatigue strains, until at last the fracture of the part occurs. It is those fractures which may cause a vital part of a gun to go "bad" so suddenly.

Whenever internal-surface fractures are found under the microscope, they are the result of the straight cutting edges of the reamer's flutes breaking off the chips rather than shaving them away from the surface they contact. Reamers of this type naturally fracture the structure of the metal between the crystals, producing an effect similar to that characteristic appearance of a freshly planed surface of a pine board run through a jointer which carried extremely dull blades. Therefore, whenever a reamed hole is only judged by the naked eye, it is not possible to observe the minute defects left by the conventional type of reamer, for specimens must be prepared and viewed under the microscope for surface defects; and it is only in such a manner that we might become familiar with the finishes produced, and the exact damage to the surface of the metal by the reamers employed. A reamed surface, when viewed under the microscope, should be free of all fractures, and specimens should be so prepared that the edges of the hole from the center can be readily explored; and when etched, all exact vices are very plainly detected, especially when viewed under different magnifications.

Of course, under various magnifications, all kinds of internal-surface imperfections can be found, which are difficult to eradicate without employing burnishing or scrape reamers, reamers which have a scrape cutting edge, and which are illustrated on pages 121 and 122, Volume II. Regardless of the type of first reamers employed for the roughing operation, scrape reamers must be used to produce a very high surface finish, and an exact size, as in the case of a rifle barrel. In the manufacture of gun barrels, of course, three scrape reamers are used to produce a finish and a correct gauge size, but they are unable completely to eliminate the fractures caused by the straight-fluted reamers. Whenever much finer finishes are required, a spiral fluted reamer must be used with a sufficient oil supply so that the flutes may not labor under operation, and so that the curled chips may come away from the flutes with the utmost freedom, as a curled shaving comes away from the blade of a keen cutting edge of a carpenter's plane, whether under a heavy or a light cut.

Lapping— It should be remembered that surfaces which cause friction must be transferred from raw-machined and process-finished surfaces to limits terminating in a solid surface capable of reducing friction to a minimum, especially in a gun barrel and all the working parts of a firearm able to maintain an adequate and suitable oil film. This subject should be of paramount interest to those who make rifle and shotgun barrels, and yet it is one about which very little is known definitely, as we have already pointed out. It is a proved fact, that minimum friction to the passage of the bullet through the bore of a rifle barrel is obtainable only when the projectile makes its starting flight with complete freedom after the rifling is first engraved upon the bullet's bearing surface. The bullet then responds to an independent velocity without being retarded by the file-like appearance at the top of the lands (which can be discovered by the aid of the microscope), and which removes minute particles of metal at the bottom of the grooves engraved in the bullet. It is the pointed, sharp surfaces of the file-like minute scratches that peel off the metal and produce abrasion, so by removing these by a lapping operation, if found necessary, the life of the barrel may be multiplied a number of times.

Lapping to produce a fine finish to the interior of a fowling piece or a smooth-bore musket is probably one of the oldest arts in gunmaking. In other industries, today, it is used in the production of optical work of all kinds, and in the toolroom on precision tools and gauges.

Of course, it is entirely different from all other mechanical operations for producing a finish in that lapping is limited to the use of powdered abrasives, from various grades of emery powder, diamond dust, to that of finely powdered rouge. The abrasive materials are usually mixed with different types of carriers such as oil, grease, etc., and charged into the porous surfaces of hard woods, cast iron, brass,

lead, etc., together with the lubricant and used to lap various parts of guns, including the barrels. Today, in mass production of firearms, all parts are either turned, reamed or ground to size, and a lap is very seldom used on a rifle barrel.

For most commercial purposes it is too expensive a method to be of much value, except in the toolroom and in the small experimental shop of the guncraftsman. Lapping is something that requires the greatest amount of personal skill and experience for the production of finishes. It is a very slow and precise operation in securing exact measurements, and the resultant finishes depend upon the experience and ability of the mechanic handling the laps and abrasives. Even the experienced mechanic generally leaves a finish of minute scratches over the entire surface of the work—scratches so fine that the naked eye cannot detect them. Yet they are easily measured or photographed, and a photomicrograph of the ordinary lapped finish at 50 magnifications indicates the surface to be a miniature surface of a skating rink in January. Yet it does not require the aid of the microscope to measure surface smoothness as we do it in the laboratory, for the ball of the finger can be used, or the fingernail, the edge of a coin, the use of a thin nonmetallic edge, the naked eye, and the edge of one's front teeth. Of course, the latter method cannot be used on any large parts, except by those who happen to have false teeth, and then they would have to be removed to perform the operation This method is not advised in public.

American vs. British Finishes—We are all aware of the singular advance made within the last half century in the United States in the gunmaking industry. Yet, apart from all the modern improvements, the problem of the "finishing" of firearms has been sadly neglected, internally and externally. The finishing on American firearms when compared to that on all British makes is neither as substantial nor as lasting. It is evident, to begin with, that American guns have two forms of finishing—a useful finish and a useless finish. This distinction, which can more or less be detected, may be further defined as "substantial finish" and "apparent finish," or, more bluntly, "lasting" and "deceiving." So far as the finish is contrived for the purpose of deceiving, we have nothing to say against it, because it serves a purpose at the price paid. But there is a form of vanity which displays itself in an attempt to give the outward appearance of firearm durability to a finish that will not survive hard handling. Yet, when such a gun is purchased, there is much in this finish to be admired—until it begins to wear off by hard usage. The finish on most British guns, on the other hand, is completed for the purpose of lasting, and we find much to be said in its favor; it has certain qualities—smoothness and fineness to a certain degree, and a texture which would be worthy of admiration on any kind of firearms, for it has been placed on the exterior by acids, and then finished by a burnishing operation—quite unlike the finish upon the majority of American guns, which has been produced in a day by the fumes from chemical compounds.

Our best finishing process by chemical compound is by no means a coarse one, but it can deceive the inexperienced. For we may be able to smooth the surface, externally and internally; and, externally, soften the outlines round barrel and action, but if a good magnifying glass is used on our miracle of factory skill, the visible finish on the metal in all details will appear incomplete; the pores in the stock and forearm will appear partially unfilled; the oil finish, which requires from three to four weeks' time, is hurried—completed, as it shows, in a day. When it comes to a comparison of American with British guns, it seems as if the British gunmakers are capable of producing a much better finish than our gunmakers. The higher-priced the American gun becomes, the higher the finish and ornamentations, and the same is true of the interior of its mechanism. But it is not high enough to warrant a sportsman's paying the higher price when he can select a standard gun and have the ornamentation executed to suit his own taste and liking; that is, the engraving more in keeping with his idea of intelligent expression. Nevertheless, good American firearms do exist. They are all about us, and sportsmen are justified in making their own critical selection, for it is their money which they spend.

CHAPTER VI

Essential Results of High-Velocity Experiments

WE APPARENTLY must admit the inherited stupidity of nations in failing to arm themselves intelligently. That stupidity is evidenced by the creeping slowness with which medieval men improved their means of warfare when opportunities for improvement lay all around them waiting to be observed and embraced. Again, it is evidenced by our own failure to gain the most for the proper defense of our nation from the opportunities offered by men of science, particularly in employing them constantly in experimental development and research. Viewing the improvements made in military weapons year by year, it is true, one can see a progressive betterment—at a tremendous cost. But the ways of the past are too slow for the present age.

We have recently become seriously thoughtful of our responsibilities regarding defense preparations. We can now be properly optimistic as to the changing design of weapons necessary for our complete protection from the air. We have also become alert to the importance of complete efficiency of higher velocities in all calibers of guns.

Optimism, however, must have a solid basis if it is to be of any help to us in this emergency. One of the weakest points in our present preparedness campaign is due to the failure of our army and navy officers to foresee the possibilities of higher-velocity projectiles and to perfect the manner in which they can be perfectly controlled over long ranges. True optimism arises from courage coupled with knowledge through which difficulties and pitfalls are foreseen and guarded against. Our military and naval experts have large departments at their fingertips, so to speak, but these are not always used to their full capacity. It is important for us to understand fully the need of entrusting all such research and experiments to efficient employees rather than to army officers who are changed to other posts every four years.

The Gerlich Gun—Before proceeding to discuss high-velocity research and experiments, it is desirable for us to review our file marks in a research engineer's habitual manner. The story begins with the way in which a high-velocity gun was discovered by German army officers, and how, from this discovery, arose the guns which are now employed on the Channel coast line of France to shell England.

To make the picture more complete, it will be necessary to review one of the most essential developments made on higher velocities over the conventional types of arms and ammunition. Gerlich, a German inventor who was the originator of the tapered rifled barrel and finned bullet, tried for many years to interest various European nations, including his own, in his high-velocity invention; but he failed in all his attempts. In 1932 the United States Army became interested in his idea and thought of purchasing his patent rights, provided it were possible to secure the velocities he had made claims for, which were supposed to be greater than 6500 f. s. (foot-seconds). Paying Gerlich's expenses to this country, the U. S. Army conducted firing trials with his original guns and ammunition, which he brought with him from Germany; but it was found to be possible to secure a velocity of only 4500 f. s. For a period of four years the army worked upon his patent at a cost of many thousands of dollars, and then discontinued all experimental work because it was impossible to secure a greater velocity than that of his original guns and ammunition. Both the Dupont and the Hercules powder companies were called in on this problem, and they manufactured many different grades of experimental powders, but failed to bring the velocities up to the inventor's claims.

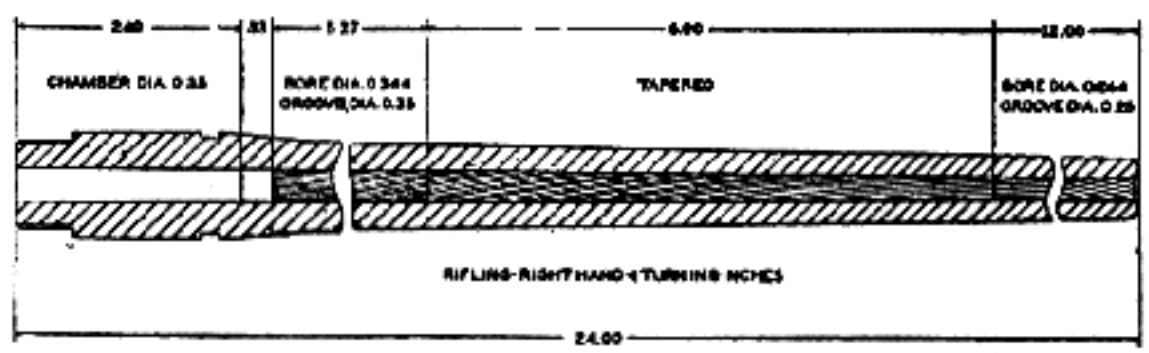

Fig. 15
The Gerlich high-velocity tapered rifled gun barrel

Even though his gun had failed to produce the velocities that he had claimed, Gerlich's ultra-high-velocity gun had many promising features. The interior of his barrel was made in three tapered sections; that is, they were tapered rifled sections, consisting of a short tapered section at the rear, an

intermediate taper, and a straight cylindrical section of about 12 inches back from the muzzle, as illustrated in Figure 15. The rear taper in front of the chamber is enlarged to a caliber .35, and ends at the straight cylindrical diameter as a caliber .25, the two tapers and straight bore being rifled their entire length. The cost of all the experimental barrel work at the Springfield Armory was nearly $40,000, which proved that the cost of manufacturing such barrels for military purposes would be prohibitive.

After the Springfield Armory completed the Gerlich tapered barrels, they were shipped to the Frankford Arsenal, which made the experimental bullets and conducted all firing trials and ballistic tests. The bullets fired in this rifle had two flanges which might be described as fins. These fins, in the beginning flight of the bullet, engaged the first taper in the groove diameter of the rifling, making a perfect gas seal. (This bullet is illustrated in Figure 16.) When the projectile leaves the mouth of the cartridge case, the fins gradually fold into the recess cut below the cylindrical diameter, and by the time it reaches the caliber diameter, it is delivered at the muzzle of the barrel as a solid bullet, and with a much higher velocity than can be secured with the

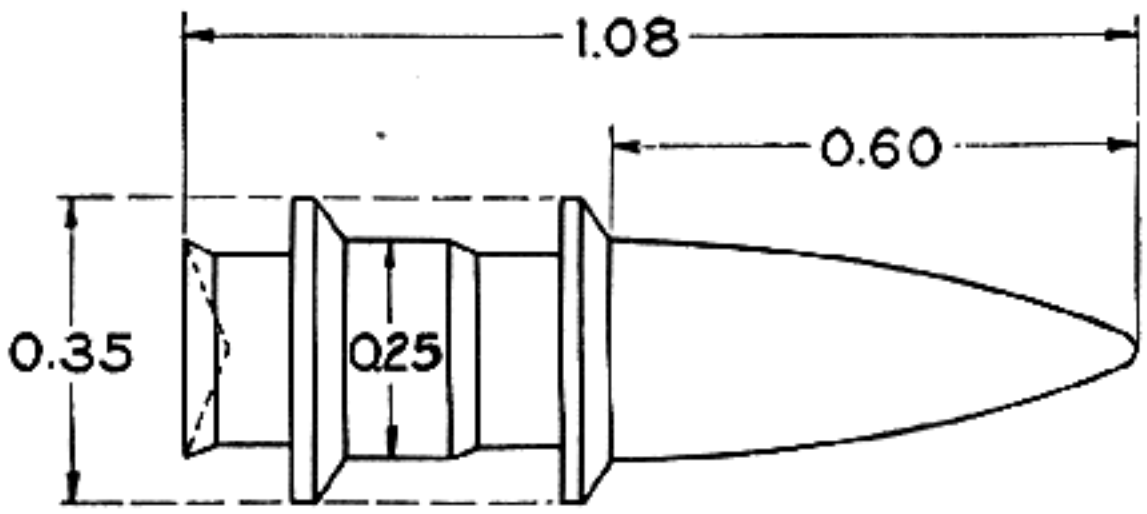

Fig. 16
The Gerlich two-diameter bullet, caliber, .35—.25, weight 100 grains

conventional type of bullet. The firing of Gerlich's own cartridges, even loaded with German powders, developed velocities far below that which he himself had anticipated, and all further experiments were given up.

A High-Velocity Discovery—Life carries us much more toward experiments than toward perfection, so that on January 2, 1937, I accepted a position at the Springfield Armory, and was assigned to the further development of a high-velocity gun and its ammunition. But I was to attack the problem from a different angle than that specified in Gerlich's patents, and was to secure, if possible, the velocities which Gerlich anticipated.

Our experiments in the beginning were not encouraging, for we used the same bullet as Gerlich—a two-fin bullet—but reduced the caliber to a .30-.22; that is, we used the standard caliber .30 Model 1906 cartridge case, and reduced our caliber to a .22 in the bore, using a bullet whose weight was over 60 grains. Success along these lines eluded us until we had reduced our bullet to 45 grains and used but one fin, with a fiber base over the rear of

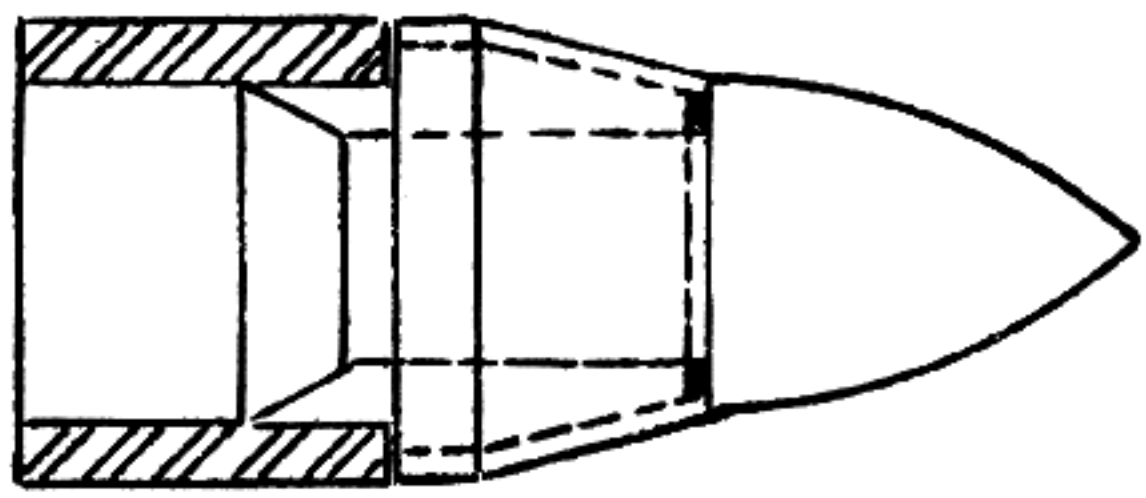

Fig. 17
The two-diameter bullet with but one fin, and with fiber base attached, caliber .30—.22, weight 45 grains

the bullet to hold it centrally in the mouth of the case and keep it centered in its passage through the gas-expansion chamber—the auxiliary chamber or tapered cone. (Figure 17 shows this bullet with the fiber base attached.) The complete details of all experiments leading to the high-velocity results will be given later in this chapter.

Our experiments then produced results more quickly than we had ever expected. After centering our pressure gun on the screens, a velocity of 5122 f. s. was recorded on the Aberdeen chronograph with a pressure slightly above normal, using a powder which was made for the Gerlich experiments. Many more shots were then fired, but, although the bullets penetrated both screens perfectly, and the needles on the chronograph issued sparks from both, there was only one shot that recorded a velocity, namely, 7100 f. s. From all the rest of the shots fired, no indications of the recording marks could be found, proving that the velocities were too high for the instrument to handle, or that the bullets had made such large holes in the screens that the wires were short-circuited, so that the proper contacts could not be made back to the instrument.

Though we had secured these high velocities, the appropriations ran out on this order, and without the necessary funds to go any farther, I was assigned to some of the more serious problems on the Garand automatic rifle, especially in regard to the receiver, which was causing difficulties for those who were trying to place it in production. Having become very much disgusted and discouraged with

the methods used in securing production of the receivers for these weapons, I then severed my connection with the Armory in May, 1937.

It is undeniable that it is very difficult to get either the Army or the Navy Department at Washington to take much interest in new ideas, particularly in such a problem as higher velocities for all types of weapons after the failure made with Gerlich's patents. The remarkable results that I had secured in a period of six weeks were apparently wasted. Therefore, knowing military traditions from experience, I did not attempt to present the problem any further in this country, but was most fortunate in having the British Government become interested in my idea, and left for England in July, 1937.

Failure in England— The discouraging element of the situation was the fact that we did not complete our firing trials here, but went to England with two barrels with pressure gauges attached, and with a supply of bullets and cartridges. When we had been assigned to the Woolwich Arsenal, and our ballistic firing trials had been started, it was found necessary to ream the expansion chamber to a much greater length. This chamber had purposely been left short, for as the firing trials progressed it was to be reamed to the length which would give velocity up to that secured in our original barrel. But after five shots were fired, the surface became nitrided, or hardened, and the reamers brought along for this purpose would not cut the surface of the metal. Under such circumstances, I then returned home; not discouraged, but with hope that some day I could prove that my original ideas on high velocities were not to be just another foolish experiment. My faith was not shaken, though it had come up against some pitiless natural forces.

It requires considerable money to bring such an idea to the front, and this burden ought not to be shouldered by the inventor, especially when such weapons are efficient only in military and naval operations, and could never be used successfully as either target or hunting arms. As for the outcome of this endeavor, speaking generally, I should say that it was considerable, but incomplete; the results attained, though far short of success, were more than worth the trouble and pains of a trip to England. If we did not get all the velocity we had counted upon, we did get very much that had never entered into our calculations, notably the respect and generous treatment of the British army officers, who were broad-minded enough to say that the best of inventions are imperfect in the beginning.

The two negative words that best characterize all our inventions from this point of view are, in the beginning, *imperfection* and *uncertainty*. Looking at the situation in such a light, but with unabated faith in the ideas upon which I had spent so much energy, I turned to other phases of research and experiment, and allowed the high-velocity problem to rest until I should be more able to prove my claims.

An Accusation— Down to this point I can speak with the authority of experience, and may mention that in July, 1940, while in Washington, I visited the War Department—without any thoughts of our high-velocity experiments in mind, but merely to meet friends and discuss various angles of ballistic problems. As I was sitting in one of the offices, an officer entered (no names shall be mentioned in this case) and accused me of spending a good deal of time in Poland before the German invasion of that country, and of having sold my high-velocity ideas there for a large sum of money. It is evident that there are two opposite ways of avoiding error; one is to know all about the point at issue, and the other is to know absolutely nothing. In this case I knew absolutely nothing, and simply offered my accuser a watertight alibi. Even then, I could see that there was considerable doubt in his mind. Not until I had completely satisfied him that I was never in Poland did he tell me what had caused his accusation.

According to reports reaching the War Department through our Berlin attaché, an army officer attached to the U. S. ambassador's office, there was a high-velocity gun among the captured war material reaching Berlin after the invasion of Poland. This gun, so it seems, had been putting the German tanks out of commission, the projectiles penetrating their heavy armor. After the gun had reached Berlin, and in the presence of many of the German army officers, the American attaché had had an opportunity to examine the barrel and ammunition, and had come to the conclusion that I had sold my idea to the Polish government; and he had sent an official report back here to that effect.

He also reported that the Germans went to work at once and made a 6-inch rifle by following out the same pattern as found in the Polish high-velocity, and in their tests found that it was possible to secure a range three times greater than with the conventional design of the same caliber, or a range of forty miles. As they had secured such phenomenal velocities in their experimental tests, they started the manufacture of the weapons at once, and these are the guns which are now used to shell England from the coast of France.

I am fully aware that, at first sight, this may seem a secret trust which should not be reviewed,

but it furnishes the key to a complicated situation in which I happened later to be the first to discover the methods of securing these high velocities. So I am recording the results as told to me, which is the only effective means of pushing our claims to the front, and of proving the inherited stupidity of our own War Department. Our War Department, no doubt, looks upon all inventors as people they must humor and push aside as soon as possible. Any deep subject pertaining to improvements puts a strain upon its officers' minds, and they are unable to act upon it according to its merits. A just criticism may be anticipated in this case, especially when some British army officer observes the damage done by the shells fired from those long-range weapons, and remembers the claims which we had formulated. The general broad claims, of which they have a copy, were these:

Subject: An invention to increase the velocities of small arms and artillery projectiles over the present standards, especially in the design of barrels and their ammunition, such weapons being the ones used for the purpose of military and naval defense.

(1) The material reduction in weight of many minor and major caliber guns and their projectiles, securing greater efficiency of performance over long ranges.

(2) A material increase in small-arms bullet velocities over the present standards; namely, that of increasing their velocities between 50 and 100 per cent; and in artillery and naval guns, there should be a material increase in velocities greater than 20 per cent.

(3) The reduction in weight of many major-caliber anti-aircraft guns; for example, the 3-inch anti-aircraft gun could be reduced to a 2-inch caliber, and with a higher velocity given to the projectile, an object can be reached much sooner.

(4) Greater life can be secured to the bore and rifling in all classes of weapons; for when a higher velocity is given to a projectile, the surface of the metal absorbs a high percentage of the carbon from the powder gases, thus hardening the bore and rifling to such a degree that longer life can be given to all major-caliber guns without showing any harmful effects to the surfaces of the metal as found in all conventional types of barrels.

(5) The ability to secure high muzzle velocities and high remaining velocities over long ranges while the projectiles are in flight.

(6) The most favorable condition attending this invention is that there are not any expensive manufacturing methods required to make either the barrels or the projectiles, nor is there any necessity of using special materials which are hard to secure from other countries in time of war.

In general—to illustrate: By reducing a one (1) pound projectile (7000 grains avoird.) to six (6) ounces (2625 grains), and the bore of the barrel to one inch from 1.437 inch, the muzzle velocity is increased materially—for instance, to 4000 f. s.—by this reduction in caliber. When this reduction in weight takes place in the projectile, it is capable of producing the same striking energy as a one-pound shell against an object in foot-pounds. Clearly, these figures will prove our statement: When a one-pound shell is fired at a muzzle velocity of 2400 f. s., it produces a striking energy of 89,552 foot-pounds; but, on the other hand, when the six-ounce projectile is given the greater velocity of 4000 f. s., there is produced a striking energy of 89,730 foot-pounds, which is practically the same striking energy as that which had been secured with the heavier shell. To accomplish this, normal pressures are easily maintained in the barrel chamber. This interesting reduction in the weight of the projectile, with normal pressures maintained in the chamber, decreases the time of flight to the target, which is of particular value in the case of moving targets, including airplanes, tanks, etc. This reduction in weight of the projectiles and guns proves a vital factor, also, not only in efficiency in actual use, but in the transportation of ammunition to the points of operation.

Under the most unfavorable circumstances, we have secured high velocities in military small arms, using the service Springfield action, to which a special-caliber .22 barrel was connected; velocities between 5122 f. s. and 7100 f. s. were thus obtained. Discovering the means of securing these high velocities in small arms led us many steps further in thought, causing us to assume that the same principles could be applied to the larger calibers, holding the same relations to the mechanical reductions as the gun originally tested.

Scientific Aspects of High Velocity—Let us now turn our attention to the scientific aspects of high-velocity experiments. Interest in such ballistic experiments keeps us constantly seeking for new kinds of original thought in scientific matters—and at the same time constantly exposing ourselves to new troubles of which we might otherwise have remained ignorant. Great men like Newton never allowed their minds to remain dormant. It was Newton who discovered the "Law of Inertia" that "To every action there is an equal and opposite reaction"; and that the existence of a force implies of necessity some resistance against which the force is applied. When a force is applied to a bullet at rest, the resistance offered by the bullet is due to the inertia of its mass. By the same token, if we attempt to alter the existing weight of any bullet or projectile, a resistance is immediately experienced from existing standards. This co-existence of action and reaction, and the resistance which a projectile offers by reason of increasing or decreasing its mass, is the resistance due also to inertia, without taking into consideration the resistance of friction, which we shall touch upon later.

It is known that certain laws of nature—those in particular which govern mechanics and gases—are basic. In the basic formulas the following equations hold:

$$\text{Pressure} \times \text{Area} = \text{Force}$$
$$\text{Force} = \text{Mass} \times \text{Acceleration}$$
$$\text{Velocity} = \text{Time} \times \text{Acceleration}$$

Since our maximum pressure is limited, due to our present strength of materials, it appears that

the only method open to us for obtaining greater velocities in projectiles than that already obtained from established bore diameters, is to increase the area over which the pressure acts in order to give greater momentum to the bullet or projectile upon its axis, and to reduce both the mass of the projectile and the caliber of the gun.

Let us now imagine, for example, a caliber .30 M-1 bullet that has a diameter of 0.3085 inch and weighs 173 grains, upon which a pressure of 52,000 pounds per square inch is exerted, giving an initial velocity of approximately 2650 feet per second. We find that should we reduce the weight of the bullet to 86 grains, causing it to move with the same powder charge, we would normally expect twice the rate of speed, and the momentum of the bullet about its axis would help to give us, as we may suppose, a velocity of 5300 feet per second. This is a perfectly legitimate way to look at the situation, and should it fail, we may think that had we used a barrel twice as long, to permit a greater acceleration of the bullet for twice the distance along the bore, it would have succeeded. But when we come to consider the laws of bullets in flight, we find that bodies in motion have some laws of their own. To deal with them an entirely new idea of force is required.

Here we strike the root of the whole theory of mechanics. It is the foundation of the system which the tremendous genius of Newton conceived in order to explain the motion of the sun, moon, and stars. Forces were treated by him as proportional to the motions, and the motions were proportional to the forces. With this idea he solved a part of the riddle of the universe. Great discoveries are made only by the ability to see things clearly.

But mass, which is the bullet or projectile, is nothing more than a quantity of matter. Knock a brick against your head, and you will then know what mass means. It is not the weight of the brick which gives you the jolt, but the mass. Try to throw a heavy stone from a shovel, and you will understand what mass is. Try to push a Ford car to get it started when the battery is run down, and you will soon realize what mass means. Weight is the earth's attraction on mass, and it is proportional to the mass at the same place.

Therefore, when powder gases act for a certain time on a projectile which is free to move, however small the powder charge may be, or however small the bullet may be, that projectile will move. The powder gases, of course, always tend to produce projectile motion. If motion is impossible at the beginning, then pressure is developed which can be measured by the aid of a pressure gauge, and observed. After the projectile becomes free in flight, its flight can also be measured by the aid of the chronograph, figured, and observed; and when we have these two sets of figures, i. e., pressure and velocity, they can be compared. Then we begin to reason: "A force like this powder gas, acting on a bullet composed of a mass whose weight is 173 grains, should produce, if the mass is reduced ⅓ of its weight, ⅓ more velocity." True, it works that way in certain calibers, especially where there is a great variation in the weight of the bullets; for instance, in the .300 magnum, where it is possible to select bullets between 110 and 225 grains.

But how many other factors must we consider in this hypothetical quest for higher velocities, particularly those above the established laws in ballistics acting upon projectiles—factors, for example, which give rise to a change in motion? The term used for the change of motion is "acceleration" or speeding up. In all cases it is the force of the powder gases acting upon the base of the mass which produces acceleration. If that force then continues to act on the projectile, the projectile will keep moving faster and faster. When the powder gases stop acting, the motion which the projectile has acquired, continues, but the acceleration stops. That is, the projectile, theoretically, at least, goes on moving in a straight line uniformly at the pace it had when the pressure of the powder gases stopped.

What then will happen to such bullets when exposed to the pressure of the powder gases and yet held tight? They will, of course, remain fixed until the pressure wrenches them free. Then, the longer the powder gases act, and the pressure keeps putting more and more force and motion behind the bullet without undue friction to contend with, the faster will the velocity become. The bullet keeps all the motion it had, and it keeps adding to this motion. So if, in one second, a motion of one foot (for the purpose of illustration) is imparted, then in another second a motion of one foot per second more will be added, making altogether a motion of two feet per second; in another second of forced action by the powder gases, the motion will have increased or "accelerated" by another foot, and in theory, if all mechanical effects are correctly designed, will continue to increase in the case of a high-velocity bullet.

But here the other factors begin to enter into the problem, and one of these is the loss of velocity due to friction in the double length of barrel which has been suggested; or for that matter, there would be no difference in this regard if a standard length of barrel were used, one measuring 24 inches. In all cases, the powder gases act. The lighter the bullet, the more velocity it has. If the bullet is large, it will require greater gas pressure to make it move to

a higher velocity; if the bullet is small, it moves more quickly in the beginning of its flight, but loses its effective striking energy near the termination of its flight.

Very little is known about the flow of powder gases at a high pressure. There are no experimental data, so far as we are aware, to assure us that heated powder gases at a pressure of 52,000 pounds per square inch will be able to produce a force capable of imparting more motion to a bullet than 7100 f. s., the highest velocity which we were able to secure a record of in 1937 in our experiments with high velocity.

Friction—The analogy between friction and velocities is so close that we are always tempted to forget friction at the expense of velocity. The right mode of procedure, in projectile and barrel design, in order to secure the higher velocities, is to take certain negative factors first, and not to accept positive factors as a compensation for the element of friction. Friction is the resistance obstructing the motion of a projectile when forced into the bore and the rifling of a gun barrel. Under these circumstances, the surfaces in contact have a certain tendency to adhere. The surface of the bore is not perfectly smooth, as we have already pointed out in Chapter V, and in consequence a considerable amount of force is required to overcome the mutual resistance of the two surfaces, i. e., projectile bearing surface and bore surface. If the velocity is increased, the resistance to projectile motion is increased also; on the other hand, if we give a high finish to the surface of the bore, and decrease the bearing surface to a bullet no greater than ⅛ inch, friction is diminished, though it can never be entirely eliminated. By decreasing the bearing surface of any high-velocity bullet to ⅛ inch; that is, moving the bearing surface to the rear of the bullet —accomplished by turning the original bearing surface down to the bore diameter up to the ⅛-inch new bearing surface—a 25 per cent increase in velocity can be secured.

The results of my experiments in high velocities would indicate that the friction factor at low velocities is small, as in the case of a caliber .22 lead bullet; it increases rapidly at first, then more gradually as the velocity increases, until at a certain velocity a maximum friction factor is reached. This depends upon the surfaces of the bore and groove diameters, the bullet in contact, and the intensity of the pressure required to force it through the barrel. An increase in the intensity of the pressure (the number of foot-pounds on a square inch) changes the amount of the maximum factors, and reduces the velocity appreciably. The more yielding the bullet material in the maximum diameter of the bore, the higher will be the velocity—in the case of lead bullets; but this is not so in a minimum barrel with a hard bullet jacket material to be contended with in its passage through the bore.

The existence of rifling the entire length of the interior of a gun barrel implies that when force is applied to the projectile by the powder gases, the projectile meets with resistance and retardation. But by eliminating the rifling back of the muzzle —that is, only allowing between 4 and 6 inches of rifling to remain near the muzzle, and eliminating it along the route where first the projectile encounters retardation—friction is reduced appreciably, which naturally increases the projectile's velocity. Since our maximum pressure in a cartridge chamber is limited to our present strength of materials, the most logical method open to obtain greater velocities than those which have been previously obtained in the conventional type of gun-barrel, is to have a bullet or a projectile bore-free when leaving the mouth of the cartridge case. It is even true that greater momentum to the projectile can be secured before entering the rifling remaining at the muzzle; and in its advance to this remaining rifling, it meets no opposite reaction to retard its initial velocity.

My experiments proved that a pressure of 2000 pounds to the square inch could be placed against a steel plug, in which the tolerance of 0.0002 inch was used between plug and barrel bore, and a leakage of only 2 c. c. of light oil per minute was secured. In conducting this test, a tube was reamed to 0.3752 inch diameter, and the bore was fitted with a lapped steel plug which measured 0.3750 inch, of a length the same as the bearing surface on a caliber .375 bullet. This experiment proved that a projectile of the same caliber could be "accelerated" to a greater velocity than one shot in a barrel which contained rifling; and if a bullet of a smaller caliber were shot in a similar barrel, its flight would be nearly that of the velocity of powder gases.

We have already established the fact that it requires a pressure of 2000 pounds to the square inch to force a maximum caliber .30 bullet into the rifled section of a minimum barrel, and a pressure of nearly 1000 pounds per square inch to force it the rest of the distance through the rifling. Therefore, the greater the velocity becomes, the greater becomes the force required to keep the projectile moving along its course in preparation for the friction encountered in the bore, at the bottom of the grooves, and on the edges of the rifling. Powder gases, of course, produce projectile motion, but if projectile motion meets with any

obstacles at the beginning of its flight, velocity is reduced accordingly at the expense of friction; and this, of course, generates a high degree of heat in barrels, whether on a rifle, a machine gun, or an automatic military rifle, and their efficient operation is impeded.

A bullet or projectile, when it leaves the mouth of the cartridge case, should be a free body, to act and move until reaching an established point where rifling is to be engraved—the muzzle. The law of inertia is partly established in ballistics. Therefore, in a barrel free of rifling at the rear, and with faster-burning powder confined in the cartridge case, the projectile would be a free body to move along its path, for the powder gases would be putting more and more velocity and motion behind the mass; and without friction to encounter, the projectile would keep on going faster until it reached the rifled portion at the muzzle, which would be engraved only to a depth that would impart a satisfactory spinning motion. We might call such a semi-smooth-bore gun barrel a "gas-expansion chamber." In a barrel of this design, the faster-burning powders could be used instead of the slower-burning powders, and these would be instantaneously converted into a gas to move the projectile. The faster-burning the powder employed, the greater the force and motion behind the projectile, resulting in a much higher rate of speed than that obtainable from the slower-burning powders. In all cases, the ballistic factors would become more efficient; thus, the lighter the mass, the greater the velocity; and even with the larger mass, a greater velocity could be obtained over all conventional types of weapons now in use. All weights of projectiles would move more quickly in their flight from the mouth of the cartridge case, and along their route through the gas-expansion chamber, without loss of powder energy, and by the time they entered the rifling at an established point back from the muzzle, a much greater velocity would be recorded on the chronograph.

We would find that when a projectile is fired in a barrel which is bore-free for a certain distance, friction is reduced at least 30 per cent at the rear portion of the barrel, especially where the greatest amount of heat is generated; therefore, a greater number of shots could be fired from automatic rifles and machine guns, and the life of their barrels would be increased appreciably. Yet for a certain type of mind a gun barrel free of rifling at the rear, and with rifling only at the muzzle, cannot be imagined as practical; it is just another wild, fantastic idea. Willie, a neighbor living close to our plantation, still thinks the world is flat and does not turn upon its axis. "If the world should ever turn," he argues, "all the stones would fall off, and if we could not hang on to a tree, we would fall off, too." So we shall find many who will continue to argue that a gun barrel must be rifled its entire length. They belong to the age that thinks like Willie and his uncle Buckey, who backs Willie up in all his opinions.

We have been told all our lives that a rifle could never be expected to give real accuracy unless the rifling extended its entire length. It is possible, however, that we all have been misled by a standard practise without investigating its merits. In my high-velocity tests I found that a bullet readily took the rifling even though the bore was made smooth 6 inches ahead of the cartridge chamber. It was also found that the bullet entered the rifling after passing through the smooth section without the least signs of any stripping action, and emerged from the muzzle with the perfect engraving of the rifling upon its bearing surface. So under the clarifying light of analysis half the difficulties of high-velocity experiments vanish like mist before the morning sun. But all experiments must have a beginning, and the most simple were used to make us respect this analysis when they were completed.

The High-Velocity Experiments—An unnecessary difficulty has been experienced in the failure to understand properly the fin reduction on the bullets shown in Figures 16 and 17. The fins are drawn down and folded so neatly in the recess cut out of the cylindrical diameter, that they will not be broken or partly destroyed during their passage through the bore, especially if the bullet has been made of brass or bronze and turned from the solid bar. These two materials are, to a certain extent, satisfactory for the construction of bullets for experimental firing trials; they are the materials all bullet experimenters have selected as far back as I can remember. Brass and bronze have been used for more than half a century in the construction of experimental bullets, due in part to their softness and easy working qualities on a lathe. But why should high-velocity experimenters favor these two materials when they know that accuracy cannot be obtained—that there is nothing to keep such a bullet stable in flight over long ranges? Of course, accuracy can be achieved by the employment of electrolytic copper. The closer the material comes to having the specific gravity of pure silver, the more stable our bullet becomes in flight; therefore, a copper-nickel alloy is the more appropriate material to use.

On the other hand, the methods of making bullets from materials most suited for ultra-high velocity

experiments are as varied and infinite in number as the materials themselves. In these experiments it became our duty to select the materials which would give the best results, and then these were to be given our further consideration after certain velocities were reached; for the deeper our experiments went, the harder became our problem of holding the fins in the recess after a velocity of 4000 f. s. was reached, and the more valuable became the copper-nickel alloy not only in securing stability in the bullet but in keeping the fins intact when folded down in the recess.

Regardless of the materials employed, the true explanation lies in the fact that the proper method of securing a high velocity does not lie in the design of a bullet containing either one or two fins. The proper solution lies in a mechanical reduction of a material moulded upon the bearing surface of the bullet. Thus Figure 17 illustrates the fiber base, upon which the powder gases will act effectively within a given time, and burn it as fast as the mechanical reduction takes place through the tapered cone or expansion chamber, which can be seen in Figure 19. By this mechanical reduction, and the complete ignition of the plastic material, the bullet is delivered into the reduced bore diameter. Fins placed upon bullets offer great resistance to velocity. In our firing trials, we soon discovered that even the fiber base had certain detrimental effects; later we used bases made from a compound of celluloid and resin, and more stable results were secured.

The useful knowledge gained through this discovery led to the possible application of a plastic material moulded to the bearing surface of the bullet, thus eliminating the fins entirely. Along with this discovery we were able to analyze the possibility of such a practical material in its scope and popularity in industry. It can easily be moulded to the bearing surface of any projectile in special dies, by using either of two thermoplastic materials—cellulose nitrate and cellulose acetate.

Cellulose nitrate is made by the action of a mixture of sulfuric and nitric acids on cellulose, which is thereby converted into nitrocellulose. Nitrated cellulose containing 14 per cent of nitrogen is highly explosive, but for use in moulding it to the outer surface of a projectile the nitrogen content could be controlled at around 12 per cent. By incorporating a slight amount of camphor it could be made a valuable material. The camphor would act as a solid solvent dissolving the nitrocellulose fibers and converting them into a solid solution.

Cellulose acetate, like nitrocellulose, is produced in rods and tubes, but its greatest interest here would be to mould it to the outer surface of a projectile by working it in hot moulds with no risk of fire. It is also adapted for the process of injection moulding, in which the moulding material is heated until plastic and then forced under high pressure through a small aperture into a cold mould which would fill completely and could be ejected immediately.

Up to the present point we have been dealing with materials, not with experiments. Experiments under all combinations of mechanical conditions in a chapter of this kind would be impractical, for we have over 10,000 words of experimental data, and since such data would probably be misleading, only the mechanical aspects of the experiments will be given.

We will now fix our attention on Figure 18, which illustrates the first experimental type of barrel made. In this type of two-sectional barrel, it was reasoned that since the pressure of the powder gases acts equally in all directions, and since the rear portion of the caliber .30 barrel of

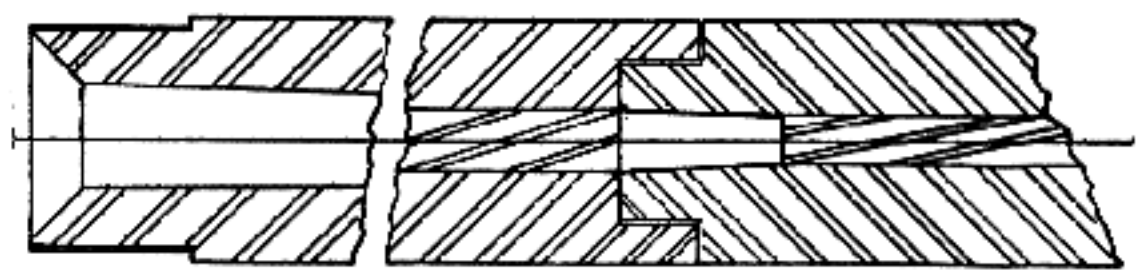

Fig. 18

The experimental two-sectional barrel. Here, a caliber .30 barrel has been attached to a caliber .22 barrel

a length of 12 inches is screwed to a caliber .22 barrel, the caliber .30 barrel would act as a gas-expansion chamber, which would give a greater opportunity for the gases to expand and in which a faster-burning powder could be used, while at the same time it would create less frictional resistance, especially at the first few inches of the bullet's movements.

The joining end of the caliber .22 barrel had a smooth cone, reamed to a length of 1¼ inches. The 12-inch length of caliber .30 barrel was fitted to a Springfield Model 1903 receiver, and the chamber reamed to take a caliber .30 Model 1906 cartridge case. When this experimental gun had been completed, it was loaded with the two-fin type of bullets weighing between 60 and 65 grains, and these were fired at a large piece of paper 50 feet from the muzzle. The shots upon the paper proved that the bullets were very unstable, for many passed sideways through the paper. Bullets were then fired into cotton waste; many were found intact; others had parts of their fins missing, which were believed to have been torn off by the recovery medium. Then a pressure gauge was mounted on

the same gun, and fired for pressure and velocity. Though we loaded our cartridge cases with standard military powder, filling the case even to the base of the bullet, only a pressure of 21,000 pounds per square inch was recorded.

Broadly enunciated, the conclusion that we came to regarding this experimental design was that the caliber .30 barrel was too long, causing the bullet to tip in various directions along its course; upon entering the cone in the caliber .22 barrel, it folded down its fins in a sort of resizing operation, and was not capable of taking a direct course in the rifled portion of the barrel. It was even impossible to find a suitable powder; some of the fast-burning powders were used, together with the improved military powders of both Dupont and Hercules manufacture, but they were unsatisfactory, and so were those used for the Gerlich experiments. So the result of this experiment confirmed our conclusion, there and then, that such an auxiliary chamber could be eliminated, and that other means should be sought to reduce the fins on the bullet before it ever entered the rifling.

From this starting point furnished by our own researches we proceeded to collate the knowledge we had gathered, and began trying to push it further; for knowledge once gained casts a faint light beyond its own immediate boundaries. There is no experiment so limited as not to illuminate something beyond itself. With this thought in mind, steps were taken to make three special barrels, each having six lands which measured 0.046 inch wide, and with rifling one turn in 10 inches, one in 12 inches, and the other in 14 inches. The barrel blanks in question were selected from forgings already drilled for the caliber .22 M2 rifle. The steel used in such forgings was W. D. 1350, which was heat-treated and had a tensile strength of 130,000 per square inch.

After the barrel blanks had been rifled, the exterior diameter was just cleaned up on a lathe and the barrels allowed to remain their full length of 24¾ inches. After completing this operation they were chambered for the cartridge case, and all three fitted to receivers. A pressure gauge was fitted to the barrel having the rifling which had one turn in 14 inches, while the barrel having the 12-inch rifling was used for our accuracy trials, as well as the one with the 10-inch rifling. In each of these barrels, a taper was reamed ahead of the chamber for a distance of 2½ inches, which we then termed the "reduction cone" or "expansion chamber."

Out of the experience gained in the two-sectional gun there grew something that stirred the imagination more than a mere experiment; and this observation at our very fingertips, so to speak, provided material for speculation upon the barrels we had now completed. We reasoned thus: That a finned bullet could be reduced in diameter by a long tapered cone, in the same manner as metal is formed in a tapered die, provided the taper is long enough to fold the metal without breaking it; the long tapered cone would do just that, if our metal had the proper ductility in the beginning to form it properly. We also disregarded the established rule of having a bullet enter the rifling after leaving the mouth of the cartridge case, thus setting forth to investigate some difficulties of a nature quite different from all those connected with the established rules of barrel design; for the bullets which had been fired from the two-sectional barrel proved, when recovered, that they did take the rifling without stripping. Now, having reamed a much longer taper in our new barrels, we would not be resizing our fins into the recess so suddenly as we did in the abrupt taper in the two-sectional barrel, but in a gradual degree by the length of taper established; allowing, at the same time, the tapered cone to act as an expansion chamber for the powder gases. Figure 19 illustrates this taper, in which the resizing operation takes place, aided by the force of the powder gases.

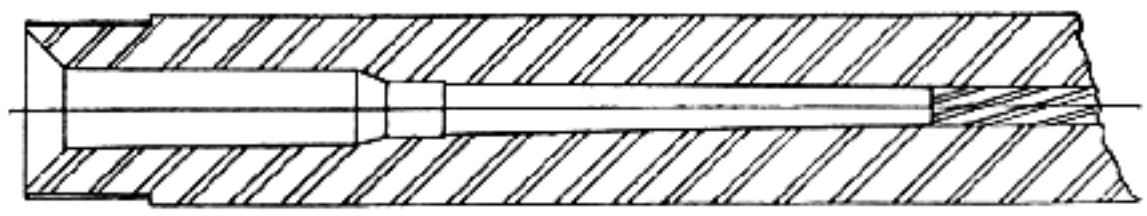

Fig. 19
The tapered cone or gas-expansion chamber constructed ahead of the cartridge chamber

Enough had been shown in the illustration to indicate that such a design had some possibilities. When our first experimental firing trials took place, the pressure gauge with the barrel possessing the 14-inch twist was used, and by loading our cartridges with Hercules No. 3 powder, and using the two-finned bullet of over 60 grains, we were able to secure velocities between 3650 and 3800 f. s., the pressures ranging between 46,800 and 56,800 foot-pounds to the square inch. Not very encouraging, but very gratifying for our firing trials with the short taper, which was increased in length after the one-fin bullet was adopted.

All who are engaged in small-arms research are painfully aware of the time consumed in the preparation of bullets and barrels, in the elimination of possible errors in design, in the testing trials, etc., and the disappointments which follow. How much ingenuity and thought are involved in bringing a

gun and its ammunition to perfection! How much more than mere expression of the idea on paper! Persons working on small arms and small-arms ammunition often experience much impatience and overexcitement, in pursuits with a very narrow range of certain possibilities, whose importance, to outsiders, appear to be trivial and contemptible. The outsider does not see the possible results coming from these carefully undertaken preparatory measures. And it was at this stage of our tests that we investigated the pressures required to fold down the fins into the recess, for here, we imagined, was what was defeating our efforts to secure a higher velocity.

The results of our investigation were very surprising. From previous tests we knew that it required between 1000 and 2000 pounds to the square inch to force a caliber .30 bullet through a barrel; therefore, we set out to investigate the pressure it required to force a finned bullet through the tapered cone we had reamed in our experimental barrels. To accomplish this, the breech end of a caliber .22 barrel was cut off to a length of 5½ inches, and by using the same reamers as used for the tapers in the barrels, a taper was reamed to a length of 4¾ inches, leaving ¾ inch of rifling remaining on the bottom end. By using a tensile testing machine, our turned bullets were pressed through this section of barrel, all with high recording pressures, until we discovered that the section of barrel had been bulged near the bottom, and the proper results were not secured. Then a steel die was made of the same length, but out of a 2-inch piece of steel, and hardened, which would require a great pressure even to crack it with the largest-diameter bullet. On one of the two-finned bullets we found that it required a pressure of 65 tons to force it through the die; that is, through the tapered section before entering the cylindrical diameter. Of course, many were found which required much less pressure to force them through the die, but all required a pressure far too high, at that, to force an ordinary bullet through a rifle barrel. A little reflection convinced us that we had been using bullets which offered too great a resistance to the powder gases, and that we would have to design a turned bullet which would pass through the die with no greater pressure than 500 pounds to the square inch, in order to secure more satisfactory results.

Obviously what was demanded was a bullet with only one fin; for those with two fins, even though they were made light in the web thickness of the fins, required too great a pressure to force them through the die, and the die must be used as a gauge to set the tools in the turning operation, regardless of whether a one- or a two-fin bullet was used. The turning operation on even the one-fin bullet was not so easy as one may think, for though it might be possible to go straight under the fin with a turning tool, and though stops could be set to secure the proper measurements, the delicacy of the turning tools required, and the smallness of the diameters to be worked upon, were bound to cause variation in sizes. Overcoming all such difficulties after a considerable period of preparation, we made a number of the one-fin bullets by setting the proper stops on the bench lathe so that all were turned to give the same pressure when forced through the die. Figure 17 illustrates this bullet, the fin acting as no more than a gas check. The sectional view of the object over the base of the bullet is the fiber base, which was turned from a solid rod and forced over the base of the bullet in order that it might be held centrally in the cartridge case—also as a means of holding it centrally in its passage through the expansion chamber or tapered cone.

Having completed a number of the one-fin bullets on a bench lathe, and also turned the fiber and celluloid bases and fitted one of these over the rear portion of each bullet, we next made pressure tests by forcing the assembled bullet through the die, centering a punch only on the base of the bullet, and found that these bases contracted and gradually slipped off the rear of the bullet as it passed through the die, so that no false pressures were recorded. Firing trials were then conducted for pressures and velocities, and surprising velocities between 5122 and 7100 f. s. were recorded; but not until we had reamed the expansion chamber to a length of 5 inches, which proved to us that a certain length of expansion chamber must be established, varying with the caliber of the guns.

Having completed our high-velocity experimental tests in such a satisfactory manner, we felt that perhaps we had reached a very valuable conclusion. Many ideas came to mind, urging us on toward further progress, particularly in testing the effects of these velocities from scientific angles—even velocities reaching beyond 7000 f. s. The direction which all these experiments took, leads us to believe that a much higher velocity in small arms can easily be attained. Success must ever depend mainly upon the amount of refinement necessary in the direction which we have already explored. Ballistics has long been an all-absorbing study to many, for our senses stand between the law of motion and the reasoning mind. We can observe the motion and the force required to impart that motion, but are not satisfied with mere observation: the facts must be accounted for—fitted into

their proper places in the line of cause and effect, and applied to the practical development of weapon and ammunition.

Curious Bullet Effects—Let us now cast a momentary glance over the targets we left behind. We found that we had acquired some valuable information from the results of bullet penetration through heavy wrapping paper stretched over a wooden frame; furthermore, we had gained a much clearer insight into the mechanics of bullet penetration through other substances. Our first findings were the peculiar perforations surrounding the bullet holes through paper, the even spacing of "air holes," and the discoloration surrounding the apertures the high-velocity bullets made. Of course, we have seen a similar condition produced by the .22 Swift bullet through targets; but in our case the perforations were burnt through as though hot sparks had issued from the outer surface of the bullet. One might surmise that the bullet was throwing off small particles of its fins, which were causing these burnt-like holes, but this theory was soon rejected. We assumed that the small perforations were caused by the rapid spinning of the bullet around its axis, which in turn was forcing the air molecules apart, and thus causing them to act as solid minute substances in a broken state, capable of penetrating the paper for a radius of about ¾ inch from the bullet's center of perforation. And the discoloration around the bullet hole might have been caused by gases expelled by the heat of the bullet due to the friction of the air, similar to that of a meteor as it hits the solid atmosphere. The bullet also tore the paper surrounding the aperture it had made, instead of showing the clean penetration which a bullet of a lower velocity makes. This was caused, perhaps, by the anvil of air being forced ahead of its point, and the evenly torn surface around the aperture had been completed by the vacuum following the bullet.

The emission of gases from these high-velocity bullets, which are very hot during their passage through the atmosphere, is, of course, the result of friction. Should we establish a standard velocity of 6000 f. s., this friction might heat the outer surface of the bullet to nearly 1500 degrees Fahrenheit; in other words, above a red heat. The greater portion of the heat is doubtless carried away by the vacuum created, but what it has gained, it keeps, and remains at a high temperature over a long range. If a bullet thus heated to a high degree, and traveling at a high speed, hits an object, it will perhaps explode, as a meteor does when it hits the atmosphere surrounding the earth. The short period of time occupied by such a bullet in passing through space allows only a thin superficial layer of the outer metal to be heated, and only a small quantity of the heat is able to penetrate to the interior; therefore, the outer layer of heat tempers the core, and coming in contact with a steel surface, the mass generates such a high degree of heat instantaneously, that the surface of steel plate is fused and melted to a considerable depth, as if it had been up against the flame of an electric arc. At present there is little prospect of this theory being proven incorrect.

In mechanics, the product of the mass of a moving body into the square of its velocity, expresses what is called the "mechanical effect." If, for example, an anti-aircraft gun, pointed vertically, shoots a shell upward with twice the velocity imparted to a second shell, the former will rise four times the height attained by the latter. If directed against an airplane, it will also do four times the execution. Hence, the importance of imparting a high velocity to all classes of projectiles in war.

Having thus cleared our way to a definite conception of the mechanical effect of a moving projectile, we are prepared to look back to the last battles of the First World War, and to note the attempts which have since been made to lengthen the flight of all projectiles. With such an object in view, means must also be invented to control such projectiles over long ranges, especially in the case of large cannon; not, however, in the case of anti-aircraft weapons, for that would be like using a high-velocity rifle to shoot a hawk on the wing. We must remember, moreover, that each war has its good and bad points in the weapons employed, as well as the weaknesses of those weapons, and that by the time a new war starts, most weapons are obsolete; therefore, in our hurry, we only make slight improvements on those which are obsolete.

The advantages of a light bullet, a high velocity, and a flat trajectory, are the objects to be sought. The value of these, however, must not be overestimated. Though we believe in a high velocity and a long range, we must never sacrifice projectile striking energy at these long ranges, for it is one of the most essential features: after reaching our objective, we must also annihilate it. The great discoveries in which a high velocity shall play a part can only be accomplished by surveying the problem clearly.

In trying to annihilate enemy aircraft over large cities, our ground troops must be protected by defensive armor like that used by soldiers four centuries ago.

CHAPTER VII

Gunpowder and Its Influence

EVER since the two volumes of *The Modern Gunsmith* were published, from one direction or another have come various requests for the formulas for making black gunpowder, smokeless powder, gun-cotton, T. N. T. (trinitrotoluene), fulminate of mercury, and even nitroglycerine. We seem to have some difficulty in understanding the motives of these requests. Naturally, we can understand that there are hundreds of experimenters seeking a propellant of much higher velocity; but surely not, likewise, a sudden opportunity for Saint Peter to make a check on their past actions.

My answers were always rather discouraging, but since we have read so much about high explosives in the dispatches from the front, we might as well go into the subject at greater length in a non-technical manner so that all may understand it.

Obviously, a low explosive like gunpowder burns by a process of rapid combustion. It is a flashlike fire. A high explosive does not burn. It detonates. It is converted into a stable gas, which proceeds by a detonation that varies from 15,000 to 25,000 feet a second. It takes about one ten-thousandth of a second for a typical 1000-pound air bomb to detonate. In other words, the high explosive is suddenly converted into a gas at very high temperature and pressure. The effect is that of a sudden and terrific blow.

To arrive at a better understanding of the inventor's affection for a higher explosive, we are going to reply at length to many of our correspondents, and we select nitroglycerine from among the high explosives to enlarge upon its impossibilities as a propellant.

Nitroglycerine as a Propellant—Many inexperienced shooters are as convinced that nitroglycerine can be used for a propellant as they are that the sun can be harnessed to store heat energy "for commercial purposes," as one man wrote us. We answer such experimenters that this explosive has great convertible power, of course, but it has no value whatsoever as a propellant. If exploded in the chamber of a rifle barrel, it would completely demolish the receiver, and possibly the chamber end of the barrel, before the bullet would ever move from the mouth of the cartridge case. There is, first of all, no logical means of confining nitroglycerine in a cartridge case even in a weakened state; and there is, secondly, the space between bullet and load, and across this space is found an anvil of air. The gases collide, they oscillate, and suddenly recoil. When this action takes place, we may expect a change in the metals, which would mean the complete loss of the gun mechanism.

There is a great amount of misinterpretation in regard to the limit of propellant force behind all classes of projectiles. Inventors are constantly seeking information to formulate more powerful projectile agents as a means of obtaining increased velocities, but a careful study of the mechanical arrangements of our modern firearms and cartridge cases will prove, not only that our present propellant agents are ideally adapted to our modern weapons, but that their energy and capabilities far exceed the tensile strength of the metals confining the gases generated. The experimenter of an inventive turn of mind should be convinced that what is needed is not a stronger propellant, but newly designed weapons, cartridge cases, and projectiles which would improve and encourage the "mechanical effect" and thus obtain greater velocity from the powders now on the market. I do not mean to say that a better propellant cannot be made than those now in use. But our present powders are by no means deficient in potential energy; what we need is to convert their complementary force and give them greater expanding energy on the opposite side of the pressure curve.

Select any of our modern rifle powders from the long list, and you are certain to secure a volume of gas that would normally occupy a space three or four hundred times that of the rifle chamber. As the grains of the powder are rapidly decomposed, and are still in a perceptive mood, they are gradually expanding as they follow the bullet a certain distance up the barrel. On the other hand, nitroglycerine, when detonated, releases a volume of gas one thousand times greater than that now used, and it is set off instantaneously. In order to appreciate the difference of effect, such an experiment would have to be made in free air. Yet it would be found that the free air would be pressing with enormous weight and mechanical force, equally on all sur-

faces surrounding the detonation. In such a sudden detonation, say of nitroglycerine, the gas must lift the whole weight of air pressure, which is similar to the weight used in a pile driver. Such a large block of metal cannot be lifted without the help of a powerful engine. For example, then, if we should detonate a small quantity of nitroglycerine yielding a cubic yard of gas, it would lift the pressure on one square yard of air, or about 50,000 foot-pounds, which is equivalent to the pressure developed in a service Springfield rifle chamber. This sudden volume of gas would be equivalent to a blow by the force of the atmosphere against the weight; or, a more apt illustration: The air would become the greater mass, and would act as an anvil; therefore, it would become a forced blow by the air against the weight.

For the sake of comparison, let us consider the action of improved military gunpowder under the same conditions. It would yield only one-third the volume of gas that nitroglycerine would yield, and would raise the same weight only one-third as high; it would be doing only one-third the amount of mechanical work, but it would be a much better propellant force. The gas generated from gunpowder requires one hundred times longer to get into action—to release all the gas confined in the powder grains—than does the gas of nitroglycerine; and under such circumstances, it is easier to lift the weight than the air.

For the sake of discussion, we will now consider the pressure of air against any broad surface; for instance, a block of wood which will measure one cubic foot. Naturally, such a block is equal on all sides. When it remains still, all the air molecules have freedom of movement around it; when we move it slowly forward, we encounter a slight resistance. If we push the block rapidly forward, the resistance of the atmosphere increases, for we have not given the air molecules time to change their position, and they have retarded the block. If we were to increase the motion to the highest speed ever attained by a racing car—say, six miles per minute—there would be encountered still more molecules offering resistance, and considerable friction. Increase that velocity ten times, which is sixty miles per minute, nearly four times the velocity of sound, and the block of wood would disappear in dust. Multiply again the velocity ten times, and not even a plate of steel ⅝ inch in thickness could withstand such resistance, for we have now reached a greater velocity than that of the earth as it passes through space; but the comparatively dense air at the earth's surface would present an almost impregnable barrier against the hardest piece of metal, and it would be burnt up by friction when hitting such a barrier. So, in the case of the detonated nitroglycerine, when the weight of the metal in the pile driver strikes the atmosphere with such a velocity, it has the same effect as that of hitting a solid anvil, and the metal block may be fractured by the sudden blow.

Black Gunpowder—We shall again fix our attention on the gunpowder which urges a bullet in flight. This is composed of combustible matter which, if burnt in the open air, would yield a certain amount of heat. It will not yield this amount if it performs the work of urging a bullet from a rifle barrel. The heat in the latter case will fall short of the heat produced in the open air, by an amount equivalent to the weight of the bullet; but the original amount is again restored by the bullet on its collision with any object. This is not difficult of comprehension, especially if the bullet is instantly recovered after hitting a hard obstacle, as many shooters have painfully discovered. In this perfect way are heat and mechanical motion connected.

Most high-school boys have tried to make black gunpowder at some time or other with varying degrees of success. My own experiments usually led to a large puff of smoke, a bad smell, and no harm to anyone, until I thought of confining the mixture in a heavy piece of pipe with one end welded shut. Over it I rammed a lot of newspaper and a heavy lead slug made out of a piece of water pipe. This contraption was then aimed at the rear of an outhouse ten yards away—one of those places which had a crescent moon cut out on the north and south sides for ventilation. After the smoke had cleared away, and I had recovered from the explosion, I ran to examine the effects of the bombardment. The lead slug had gone sideways, so it seemed, for it had made a hole in one of the boards which I could have put my head through, and had torn off a large board on the edge of the door on the opposite side, together with the button which kept the door closed. It was very fortunate that no one was in the place at the time, as this possibility had never occurred to me. But it was not long before the damage was discovered, and I was accused of destroying property with a pickax. This I acknowledged, and took the licking I so richly deserved. The experimenter will usually owe his safety to his invariable lack of complete success, but if he compounds his black gunpowder correctly, as I had mine, it is capable of doing a lot of harm, especially in the hands of a high-school boy with no common sense and a lot of sporting instinct.

One thing is quite certain: If charcoal, saltpeter and sulfur are ground very fine and mixed together, and if this mixture is not successful as an explosive

when confined, we have at least done our best, for we have produced a glorious blaze and a horrid smell. But to make the compound really successful, the mixture is wetted and pressed into cakes and dried, and when dry, broken up into small pieces and ground to the size of grain desired. The precise proportions of the materials seem to vary a great deal with various makers, but generally speaking there is about 75 per cent of saltpeter (potassium nitrate), 15 per cent of willow charcoal, and 10 per cent of sulfur.

Black powder, like all explosives, is simply a mixture of certain elements which are capable of burning very suddenly when ignited. When the furnace fire has been started, we let in plenty of air to encourage the process called combustion, or the generation of light and heat by the chemical reaction of oxidation.

What really takes place in the furnace is that the carbon confined in the coal enters into combination with the oxygen from the air, and the two together form the compound called "carbonic acid gas." There is nothing lost or destroyed in this process; the carbon and oxygen have simply been changed into the new substance, and if we were to weigh the gas produced we should find that it agreed precisely with the weight of the carbon and oxygen consumed. Naturally, a fire is required to heat our home, but the chief feature of this process is not the forming of gas, for that simply goes off into the free air through the chimney; the important thing is the heat which is released. The heat is hidden, locked up, "latent" in the coal; we cannot feel it nor can we perceive it in any manner, but it appears as soon as we allow the carbon to combine with the oxygen.

To most minds, however, the energy of heat presents itself as a thing totally distinct from ordinary energy. When we apply the match to the fuel, all we do is to set up the conditions under which carbon and oxygen are able to follow their natural instincts. By the friction of wood a savage can raise it to the temperature of ignition; by properly striking a piece of steel we can cause it to glow, and thus generate heat.

A coal fire burns slowly, for the simple reason that ignition is only at the surface of the lumps; it is only there that carbon and oxygen are in contact. But if we grind up the coal, as Dr. Diesel did, into a fine powder, and then blow a cloud of it into a cylinder of compressed air, so that every minute particle is surrounded with air, a spark will cause an explosion. And if the cylinder were made of glass it would be shattered into minute particles.

To cause an explosion, even in a small mass, we require fuel, just as we do to make a fire; but the mass must be intimately mixed with oxygen, so that it can burn completely in practically a single impulse. In black powder we obtain these ideal conditions. There is the carbon in a definite form, and the sulfur which likewise burns readily, and in the potassium nitrate (saltpeter) the requisite oxygen.

At all events, it is plain that we do not need to speculate upon the furnishing of air for the oxygen, for the powder thus compounded possesses it, confined in the potassium nitrate. Surely, we now can understand why it is so important that all the elements be ground very fine, for only by this means can every particle of the ingredients be put into close relations with each other, so that they are ready to furnish the necessary amount of oxygen when ignited. Then, every particle is pushed against its neighbor and forms a gas with extreme rapidity, so that the bullet is propelled so fast from the muzzle of the barrel that the eye cannot detect its presence as it speeds toward the target. It is well to remember that all substances whose names begin with "nitr-" contain nitrogen: while the termination "ate" signifies the presence of oxygen. Thus we need the oxygen, not only in the primer mixture, but also in the powder, to cause the explosion. We make no direct use of the nitrogen, yet it has to be present, for without it the oxygen would be too slow in forming the essential gases.

Nitrogen is one of the strangest substances on this earth. Alone, it is extremely lazy, but it has the faculty of hurrying any other group of elements which are specifically radical. Whenever it is possible to have nitrogen gas enter into combination with other elements, it is well to look out for some extraordinary activity of an explosive sort.

Let us now turn our attention to the spark that we may apply to a quantity of gunpowder. This spark passes among the particles in which we have set up an ideal condition for the combining of carbon and oxygen. The result may be anticipated. The nitrogen acts upon the oxygen which has been stored in the nitrate, and a sudden burning is the result. Here, then, our gunpowder is suddenly changed into a volume of hot gas; that is to say, one cubic inch of gunpowder has been suddenly changed into 2500 times its volume, and we now have what we term an explosion. If this takes place in an enclosed space, so that the gas cannot expand as it wants to, the result is a pressure of so many tons to the square inch exerted in all directions. And if this enclosed space is the chamber of a gun, that energy or working power is available to force the projectile from the barrel, measured in so many feet per second. And if the bullet is shot upward at any desired angle, it consumes the actual energy which the gases were capable of producing, together with the stored-up potential energy. When it

reaches its utmost height, all of its actual energy is consumed, its potential energy being then at its maximum.

Black powder, of course, is very seldom used now for sporting purposes, but it still has some special uses in warfare. Because of the great amount of smoke, such powders are not used for military operations today; all powders are of the smokeless type, and known as the improved military rifle powders. The reason why black powder makes a dense smoke, is that the burning which takes place is very incomplete; therefore, more than half a century ago, attention was fixed on the producing of powders that would burn more completely.

Smokeless Powders—One of our best-known smokeless gunpowders is a double-base powder, the basis of which is nitroglycerine. This was one of the first to be successfully used in military small arms, and its main ingredient is glycerine.

Glycerine consists of carbon, a lot of hydrogen, and some oxygen. These are not merely mixed together, but are in chemical combination, just as oxygen and hydrogen are combined in water. Both carbon and hydrogen will combine with oxygen and give off heat in the process, but in glycerine they are already dexterously united. Glycerine itself has no value as an explosive, but if we bring nitric acid and sulfuric acid into contact with it, an affinity takes place, and two new combinations are formed, one being water and the other a compound containing carbon and hydrogen, a considerable amount of oxygen, but most important of all, nitrogen, that restless element to be feared.

The term "force" has been for some time creeping upon us. We now apply it to nitroglycerine, a particularly dangerous explosive (as we have already pointed out), for nitrogen seems to be so uncomfortable in this mixture that at the least provocation it will tear apart the whole combination, liberating a mass of free atoms of carbon, hydrogen and oxygen, all seeking molecular attraction, which may be called chemical affinity, and all set for a glorious detonation.

So untamed is nitroglycerine that it was almost useless until Nobel tamed it by mixing it with an earth called Kieselguhr, which reduces its sensitiveness sufficiently to make it a safe explosive to use. To this mixture Nobel gave the name of dynamite.

It becomes interesting at this point to compare the action of nitroglycerine with that of black powder again. The latter is only a mixture: the former a chemical compound. The smallest particle of the typical black powder contains millions of molecules and a still larger number of atoms; but when nitrogen breaks up nitroglycerine, just before the actual detonation takes place we have but a mixture of single atoms; therefore, the burning is quicker and more thorough, and a moving force collides with the atmosphere.

Gun-Cotton—Another well-known explosive is gun-cotton. In the early stages of its discovery, many attempts were made to use it as a substitute for rifle powder, as it possessed the advantage over all other powders of burning without any perceptible residue and also without any smoke. It seems very strange, but is perfectly true, that nitrogen can turn glycerine into dynamite, and can also turn cotton into gun-cotton. Cotton consists mainly of cellulose, a compound of carbon, hydrogen and oxygen, which has no tendency whatsoever to change into anything else, least of all to explode in its natural state. But that state of things naturally changes when we employ nitrogen to hasten the action of the other elements.

In actual manufacturing practise, cotton, pure and clean, is dipped into a mixture of sulfuric and nitric acids whereby the cellulose is changed into nitrocellulose, just as a similar process changes glycerine into nitroglycerine. Naturally, the whole process of manufacture is far more complicated than that of simply dipping the cotton into the acid tanks, but this is the fundamental process. The greatest problem is to eliminate the superfluous acid before reducing the mass to a pulp and pressing it into blocks. It is probably the safest of explosives, since it can be kept wet, in which condition the danger of an accidental detonation is practically nil, provided reasonable care is taken. Even when dry, one need not fear it. If ignited, it burns but does not explode—unless confined. The burning, that is to say, is not rapid like that of black powder.

When confined and exploded by a primer—by which is meant a cap inserted in the base of a cartridge case where a small quantity of a very hot explosive is confined, such, for example, as fulminate of mercury mixture—the result is a swift formation of gases which leaves little to be desired in a modern load for small-arms cartridges.

Powders made either from nitrocellulose or from nitroglycerine, of which gun-cotton is the basis, will produce four times greater explosive effects than black powder; for the density of smokeless powder is less than that of black powder, and therefore the weight for the same volume is less. Nobel also discovered, in 1866, that if the proportion of nitrocellulose was approximately equal to that of nitroglycerine, and the materials were incorporated by rolling the pressed blocks between hot rollers, he thus obtained a suitable rifle powder. This is now called a double-base powder because it contains

both nitrocellulose and nitroglycerine. The single-base or nitrocellulose powders were bulk powders and were originally designed to load on the bulk-for-bulk basis with black powder.

By combining various substances or elements, various characteristics can be secured in the propellant. The propellant must not be too sudden in its action. It must have a steady, expanding force. Its purpose is to drive the bullet; therefore its action must be slightly delayed but continuous while the bullet is still in the barrel.

The primer or detonator, which is located in the base of the cartridge case, must be indeed sensitive when hit by the striker or firing pin; yet it must be absolutely safe, so that it can be handled by all classes of people with very little risk of exploding. I have seen heavy trucks flatten out loaded ammunition as thin as cardboard, and have never known of one primer exploding under such hard treatment. But a sudden blow by the striker makes a vast difference. Of course, primer mixtures vary, but fulminate of mercury is often employed for this purpose, together with meal black powder, potassium chloride, antimony sulfide, etc.; but in all combinations of which they are made, nitrogen figures largely in the mixture.

Uniform Loading— One thing may be mentioned in relation to powders and primer charges which is of the greatest importance to those who use a lot of ammunition. The manufacture of ammunition demands not only the best of chemicals but also the utmost *uniformity* in the loading operations, so that when a sportsman inserts a cartridge in a gun chamber he can rely upon its throwing each bullet nearly to the center of its predecessor. A target shooter seeks to throw bullet after bullet within the center of the ten ring, which would clearly be quite impossible if one powder charge were heavier or lighter than the other.

CHAPTER VIII

Gauging the Wind in Shooting and in Rifle Testing

WE HAVE been firmly convinced for a number of years that all shooters, together with the technicians testing arms and ammunition for accuracy, tend to overestimate the strength of the wind upon bullets in flight. We believe we can show to a reasonable degree of satisfaction that any shooter or technician who estimates the velocity of the wind while at the firing point is almost certain to make a bad guess, especially if the wind is strong.

To begin with the negative (as naturally the first in order to clear the ground for the other): I have no belief in any perfect or ideally accurate gun or ammunition when fired against any weight of wind force; and as our philosophy of the subject is founded exclusively on firing-trial observations for a number of years from the proof house (a laboratory where guns and ammunitions are tested), and from the firing points of the rifle range, we are largely limited to firing-trial experience from these positions rather than on the range, where weapons are shot from the shoulder, and where we have to depend directly or indirectly upon personal observation. Also, we have no confidence in the duration of such accuracy as a gun and ammunition may actually possess under such circumstances. We have too often experienced that, in changing winds, the accuracy of the gun and its ammunition may be destroyed by causes over which we have no control. The two negative words best to characterize our accuracy in both rifle and its ammunition from this point of view are therefore the *imperfection* of the mechanical features of the gun and the known *uncertainty* of the wind pressure against all weights of bullets in flight. This law applies to all small arms and their ammunition without exception. There are very great differences in the degrees of accuracy when the human element and wind pressures are considered as factors, for under these circumstances the best of guns and ammunition are imperfect and the targets uncertain. The best results are those obtained with guns and ammunition upon a still, cloudless day, with the temperature at 72 degrees F.

On the other hand, the positive side of my belief in the accuracy of small arms and the human factors controlling all shooting results is as decided, and as firmly rooted in reality, as the negative. I know from my own experience, and from the experience of many others testing arms and ammunition, that the accuracy of these arms is of the very best, and that we can all accept it as the best in our day and age; for the accuracy of the best grades of arms and ammunition is much closer, when tested from the proof house, than when the weapons are fired from the shoulder. Therefore, the owners of firearms have a chance to accomplish the best possible results under all shooting conditions; but first, a study of the wind conditions under which bullets make their flight to the target must be made.

It may help us to understand the question more thoroughly if we consider that there are two distinct ways in which the strength of the wind may be specified. It may be expressed in terms of pressure, or it may be expressed in terms of velocity. Both pressure and velocity are quantities which can be measured directly with instruments. But, lacking the proper instruments, the shooter is obliged to describe the wind solely with the aid of visual and sensory observations. The prevailing tendency among shooters, under these circumstances, appears to be to estimate the wind in terms of velocity. That is a mistake which we shall now attempt to demonstrate.

To gauge the speed of the wind correctly, we must be able to determine the distance which the air travels in a given time. Obviously this can be done without instruments (other than a watch) only when the drift of smoke between two fixed reference points separated by a known distance can be observed. These aids are not usually available on the range. It hardly seems necessary to indicate further the absurdity of attempting to estimate the velocity of the wind when the motion of the air is not visible.

Doubt has often been expressed as to whether it is of any use to concern ourselves about wind pressure at all in shooting. The less we think about it—the less we consciously aim to take it into consideration—the more probable it is, according to my own experience, that we shall never attain the honors that go with successful shooting. Those who wish to win all honors possible must face the

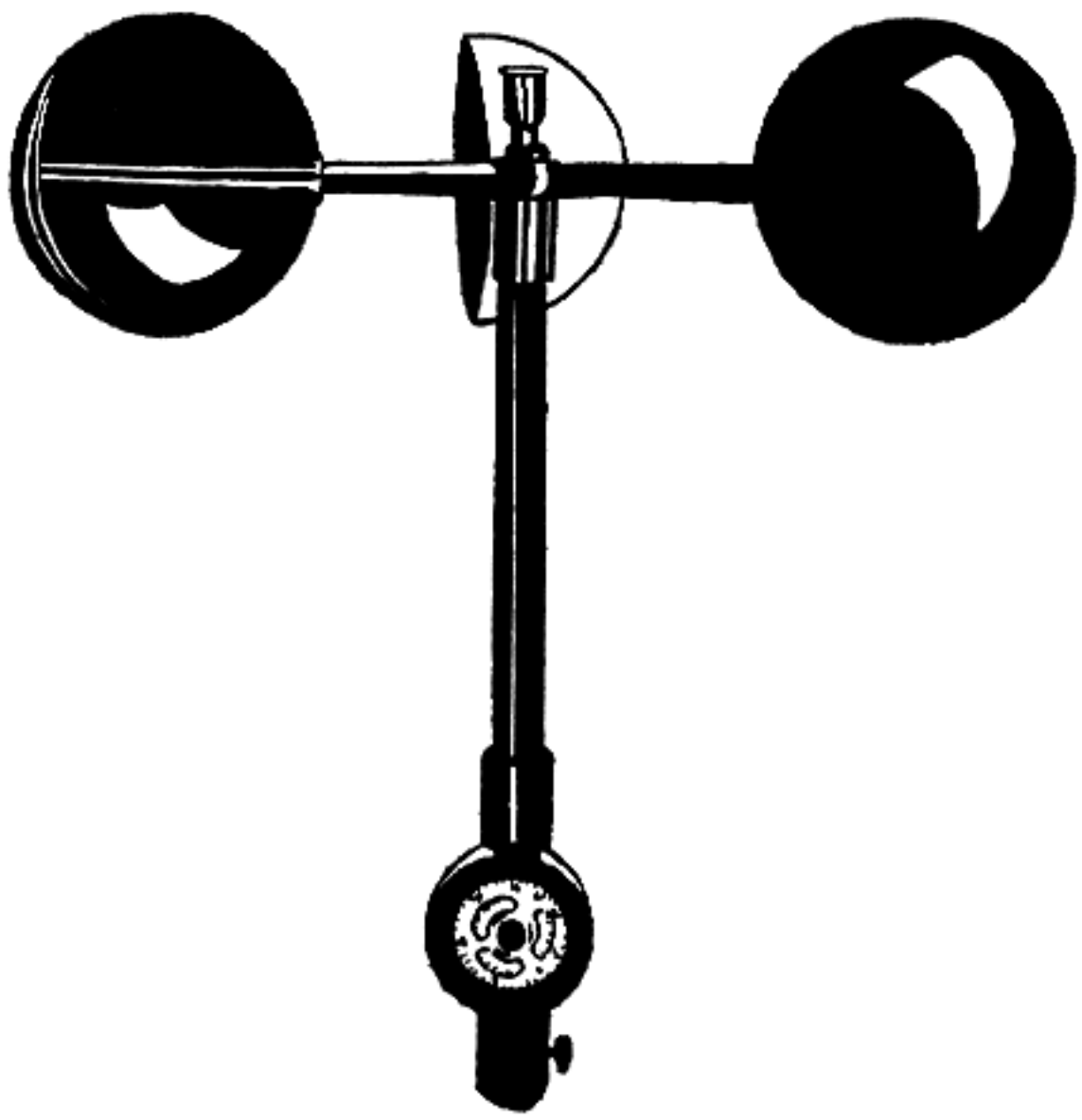

Fig. 20
All marksmen should have an anemometer in view to tell the force of the wind

fact that the pressure of the wind produces definitely observable effects upon bullets in flight. The behavior of a flag serves as a direct measure of the wind pressure, as does the degree of ruffling of the surface of a lake. Therefore, the logical way in which to describe the wind while on the range is in terms of pressure or force.

Because of the practical impossibility of observing visually the motion of the air, it is probable that most shooters formulate their velocity estimates from the perceivable effects of the wind pressure upon the grass and weeds between themselves and the target. Now, it would be perfectly legitimate to use these effects as a measure of the relative velocity if the absolute velocity were proportional in simple linear fashion to the pressure. Actually, however, the pressure is proportional to the square of the velocity, and on that account it is wrong to assume that the velocity has doubled because the "weight" of the wind has increased twofold. Certainly, this is the outstanding if not the sole reason why so many shooters tend to overestimate the velocity of strong winds blowing over any rifle range. Most of us have discovered how this can occur.

In like manner a shooter gauges the "weight" of a certain breeze by its effects on a specific weight of bullet. He later learns that an anemometer (shown in Figure 20) recorded the velocity of the breeze as 14 miles per hour coming from the direction of "3 o'clock," as shown by the wind gauge (illustrated in Figure 21). The pressure brought to bear upon a bullet by a 14-mile breeze, whether coming from 3 o'clock, 6 o'clock, 9 o'clock or 12 o'clock, is approximately 0.75 pound per square foot. In like manner he is deceived by a breeze which, judging by its effects, has twice the weight of the 14-mile breeze against the weight of the bullet, so that he assumes it must be blowing 28 miles per hour. But the velocity of a breeze which exerts a pressure of 1.5 pounds per square foot is only about 20 miles per hour. The whole velocity, it must be said, has been overestimated by 40 per cent. For example: a wind which has three times the weight of a 14-mile breeze has a velocity of only 20 miles per hour. The relation between wind velocity and wind pressure is the effect of a slow, continuous change in the drift of the bullet in the opposite direction from that which the pointer of the wind gauge shows, except when it is blowing from the direction of either 6 or 12 o'clock.

The impossibility of realizing the ideal in shooting over long ranges will be seen at once, which proves clearly that in the interest of accuracy it is necessary to estimate the wind, whether upon the range or at the proof house, in terms of "force,"

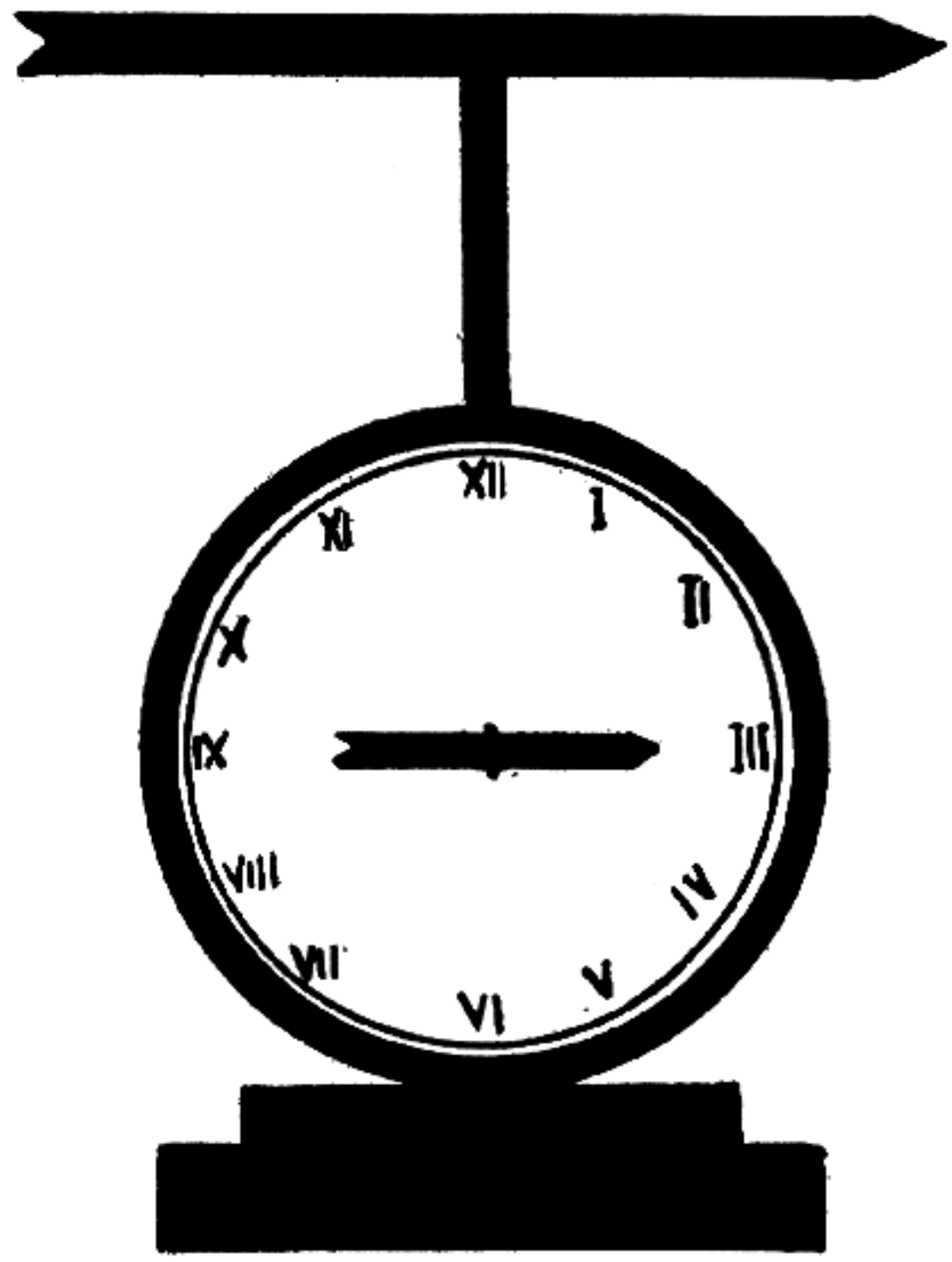

Fig. 21
A wind gauge also should be in view on any target range so that the changing direction of the wind may be observed

that is to say, in terms of the pressure brought to bear upon the weight of the bullet and the distance it is shot. The most usual practise, and the most favorable, although it is not adhered to, is to record the velocity of the wind, and later on convert this into wind force against the bullet over the distance it is shot. Too many target shooters, I believe, merely guess at the velocity of the wind, and never refer to any written record. Since this method amounts to putting the cart before the horse, and since it is never followed by the experts, the wisest plan for all beginners in target shooting is to really study wind pressures and their effects on all kinds of shooting. All the laws of nature can then be easily repealed, and the shooter can free himself of guess work and get down to reality.

The beginner in target shooting who has the sense of reality in nature is not surprised by wind phenomena, though he may at first disregard them and then seek some practical means of overcoming their evil effects. For him, as well as for other riflemen during the past century or more, it has been a natural force to contend with in rifle shooting. Men specified the strength of the wind through such descriptive terms as "calm day," "air gently moving," "breeze," "wind," "heavy wind," qualified by such adjectives as "light," "moderate," "fresh," "strong" and "heavy." Riflemen could not define these expressions concretely in terms of velocity, pressure, force, or the weight exerted against a bullet in flight. The evil done by the action of the wind on weeds and grass tops in front of the shooter, has caused him to move so many clicks on the windage screw of either aperture or telescopic sights, or to hold high, low, to the right or left of the ten ring's center on the target; yet this is as nothing in comparison with the good that can be accomplished by understanding the facts as presented by the proper instruments made for such purposes.

A correct estimate of the force of the wind cannot be made at the firing point by observing what the ground elements do, for a measurement of its velocity has little meaning unless it be translated into accurate terms of pressure. Even the exposure of the anemometer must be taken into account if it is desired to convert wind velocities recorded by the anemometer into windage clicks.

It should now be clear that the determination of wind velocity equivalents into that of windage clicks, if indeed it is possible to say at all what limits can be rigidly assigned, is by no means a simple problem, for the reason that there is no unique relationship between wind velocity as recorded by anemometers and estimates to be made on windage clicks. But the rifleman without an anemometer is concerned only with availability of reliable methods of estimating the strength of the wind in terms of either velocity or force, that which deflects the bullet in its flight toward the target. As we have already pointed out, the logical way is to estimate it in terms of force, not velocity.

However, an enterprising rifleman with a scientific turn of mind could, if he were willing to take the trouble and shoulder the expense, make a series of measurements from an accurately made machine rest equipped with micrometer adjustments, and thereby devise a scale of measurements in thousandths of an inch, which would enable a shooter to use so many thousandths to counteract the force of the wind against various weights of the more popular bullets, shot at various distances and at various velocities. In view of the growing popularity of target shooting here in this country, and the greater tendency in this direction that will come after many of our young men are discharged from the army, such a scale of measurements would be invaluable, because the sight instruments controlling windage and elevation now on the market are far from accurate. In all instances, more precise determinations could be made if the machine rest were used as the gauge, not to consider the "drift" of the bullet, but to observe that factor together with the trajectory. In fact, any attempt to draw up specifications of a spinning bullet against the force of wind would merit the attention of all target shooters.

CHAPTER IX

The Cost of Firearms

IN THE city of Teheran lived Baba Khalet, the Wise One, to whom came many Persians, traveling from far and near for counsel, which he gave freely to all, seeking nothing for himself in return.

There came to him a young sportsman, foolish in the spending of his money. "Tell me, O Wise One, what shall I do to receive the most for what I spend?"

Baba Khalet answered, "A thing that is bought or sold has no value, unless it contains that which cannot be bought or sold. Look for skilful workmanship, that which has great value!"

"But, how shall I know that, if it is a gun which I buy?" asked the young sportsman.

Spoke the Wise One, "My son, workmanship can be easily proven. Glance at the products displayed in the market places, look at the guns, therein will you find the honor and the integrity of him who makes it, or the lack of these qualities. Consider well his name before you buy."

What weary American sportsman, gun-buying tired, does not feel something of the truth of those words? It is difficult even for a man who is not a sportsman, but is one who just likes guns, and likes to walk into an ordinary sporting-goods store occasionally without paying particular attention to the extraordinary number of guns displayed in the showcases. He wonders who buys them, how any real value can be set upon them, for at times, to him, they are just guns—all alike from a distance.

But most of us, I suppose, purchase them as presents for ourselves. We buy some four or five such guns during our lifetime, out of such showcases, and we are not really gifted with the true sporting instinct. But if we were true sportsmen, on rare occasions we would take particular pains to see that our indulgence shall not be wasted on cheap guns, for this time we intend to purchase a gun worth buying. Many good guns, of course, can be found in showcases, but the very best are usually purchased on special orders from the best gunmakers here and in England.

In our early days of gun enthusiasm the matter was comparatively simple. We were then influenced by simple people, who held communal ideas about personal property. Your guns, old and newly purchased, were at their disposal, to be borrowed at any season of the year. Or others would reason in this fashion: "Sportsmen of just ordinary intelligence seldom like a good gun, and those with intelligence are dissatisfied with all good guns, for they were never cleaned when they were returned, and for that reason sportsmen purchase only cheap guns." And it is very likely that many of the guns in such showcases are just cheap guns to be purchased for just that purpose, even though there are good guns among the cheapest, with a good American name stamped on the action or the barrel. And these are influencing factors in the purchaser's mind.

Gun-Appreciation Sense— In the first place, guns can never be counted among the necessities of life, nor among its more common luxuries. The man with false sporting ideas gushing through his mind, in some manner becomes rich, and is able to command luxuries. He then feels it his duty, along with his other falsely developed appetites and tastes, to attempt to buy guns. He may understand motor cars, and have three or four of the best make, together with good clothes and a fine home, miles out of town, but his esthetic sense has not had the proper training in sportsmanship. Fine guns do not find a place in his beautifully built gun cabinet. He does not understand them. Perhaps, he is not to be blamed for this, because there is nothing in the wealth-winning process of this modern age to develop a love for such an art, or the power to judge it.

To purchase guns one must have money, and after buying them, one must be able to appreciate them in order that they may become a constant source of pleasure; and to like the best guns, one must also have an educated instinct for the outdoors. There are a great many people who have money and are quite willing to spend it for guns, could they be certain that they would receive their money's worth. They know that there is great satisfaction to be found in owning good guns, and in winning good scores on targets or bringing home full bag limits. Having no confidence in their own judgment, however, they hesitate to buy, lingering for a long time before a well-stocked showcase. They weigh and dispute the merits of rival models,

calibers, shotgun gauges, "the speed of bullets," "the accuracy of shotgun loads." They repeat the lies others have told about a gun's killing power, and after laboriously deliberating, they usually select—just a gun, irrespective of gauge or caliber or maker, the kind of gun we would be ashamed to have in our possession if we had money at our command.

It is not until a later day that they begin to doubt, and to wonder why they ever purchased such a gun, or why it so enchanted them at the time. The psychologist would, perhaps, diagnose this doubting as the first step toward the acquisition of a gun-appreciation sense.

Encouraging the Gun-Maker—This seems to bring us, finally, to the point where we are about to purchase either a rifle or a shotgun. The possibility of realizing the ideal will be seen at once as we examine two admirable weapons, one, a second-hand shotgun made thirty years ago; and the other a rifle, made but recently by a maker whose name is respected the world over. Both guns are priced at the same figure. Either, we feel, would be a treasured addition to our gun cabinet. The temptation at such a moment is to toss a coin. But there are, as a matter of fact, many reasons why we should purchase the modern gun, and all worthy reasons. If we decide to purchase the shotgun we shall not be conferring a benefit upon its maker. We shall not be encouraging the dealer to purchase various models of that particular gunmaker's work. We shall not be bettering the conditions of a gunmaker's life, for a few days, weeks, or merely hours. But we may, by purchasing the modern rifle, encourage him to continue his work of producing better guns.

Individual gunmakers, that is, the best of them, here and in England, are not business men. Unlike the manufacturers of other commodities, they have but few opportunities to dispose of their products or increase their fortunes. The private gunmakers, unlike our large American arms companies, have no combination of interests to reach the great purchasing public. Many would suggest advertising. Yes, we know that the world was not very old in culture when it began to advertise. Today, a "horsy" sportsman, laying aside his newspaper or magazine, might remark, "I rode through page after page of advertising without saddle or bridle. Now what can I believe?" But private gunmakers cannot advertise extensively, for there is not so great a profit in their creations as in other lines of business, even though many have been termed "robbers" by self-styled sportsmen. I remember being called a robber by one who was worth two million dollars, after I had worked all day upon his Westley Richards best make of shotgun and charged him the exorbitant fee of seven dollars. Expressions of that nature have been coined only by men of that caliber, and are so easily said.

Advertising—And so we are advised to advertise? Advertising leads to competition, and competition to pressure. Whether a gun is as accurate as an arrow shot from Nimrod's bow, or as bad as an old Civil War musket we once experimented with, nowadays it must be "pushed," or it will remain unknown. If sportsmen, the world over, could make known exactly what they want in firearms, and, having done that, would have the patience to devote time to a search for gunmakers who would fill their needs, the so-called "push" would not be required.

The sporting world is too lazy to determine its own wants, and the advertisements of rifles, shotguns, revolvers, cameras, fishing rods and tackle, binoculars, etc., all of which can now be purchased on the installment plan, are a perpetual reminder, insistent and powerful, and indispensable under modern business technique. So we turn to the pages of our favorite magazine or newspaper, and we see the ability of the showman to arrange words and pictures to catch the eye of the experienced and inexperienced alike. But practical observation of good firearms by the interested buyer is the best method of being impressed, especially by their performance in the hands of others.

Tailored and Untailored Guns—Sportsmen are willing to admit that good guns can be made by our best private gunmakers, and that our large arms companies are capable of turning out admirable firearms successfully under the direction of experienced men. In England, if they have not been destroyed by German bombs, sporting firearms are privately made by individual gunmakers whose firms have been in business for several generations. Here in the United States there are only a few small gunmaking establishments, with a small number of shops whose owners barely make a living, while the great mass of guns manufactured come from the large plants and are standard models, untailored, so to speak. The British sportsman is more fortunate for the reason that his guns are tailored to fit him. He feels at liberty to deal with one particular firm of gunmakers, whom he appreciates, admiring their models, their designs of actions and barrels, and their performance in the field, whether rifle or shotgun, and their name, as well as their workmanship, is in his mind superior to others in many respects.

London and Birmingham are the centers of the

British gun trade. In London are found the greatest number of rival gunmakers. There are many good establishments, and to do justice to all, it would be necessary to name all of them. If, for instance, we were to say that Purdey is considered to make better guns than Westley Richards, or Churchill, that would be doing these firms an injustice, for all three firms turn out excellent guns. It is not the duty of an author or a magazine writer to say: "In my opinion, ———— makes the best gun." The opinions of any author, in such a case, would be ineffective when there are a dozen good firms making excellent products. It is the sportsman who must form such an opinion for himself. He is the one who must make the choice between a heavy and a light gun; between doubles and over-and-under; long barrels against short; large gauge against small; choke barrels against open bores; single against double triggers; engraving against no engraving. Questions and decisions to make, choices of models which have had the support of sportsmen for more than a century! What wonder that opinions are both pro and contra, here and in England?

Cost of the Best Gun—The chief differences of opinion have come from sportsmen using the best guns—the famous best guns. It is only in the establishments of the British makers of famous guns that standards have been set, to be used as a means of judging or rating the guns made in other countries, including the United States. The best gun in England costs between $750.00 and $850.00, which is the price by which to judge the value of other guns.

We must admit that $850.00 is a high figure to set for the best gun, but that is the price, the value at the top, if we consider the sportsman's buying ability as one would a person's credit rating. As the financial standing descends, so do the prices of guns, until we reach the lowest value for weapons; for example, we learn that it is possible to purchase a gun for $3.59 through a mail-order catalogue. That would represent the lowest financial credit rating. It is not enough for one to become acquainted with gun prices only; a gun's value is determined when the maker's name, the finish, the workmanship, the accuracy and performance are disclosed. Their values must be proved. It is obvious, however, that a perfect comparison cannot be made, due to the fact that the prices of guns vary so greatly, being naturally adjusted to suit the tastes of sportsmen whose finances will not warrant the expenditure for the better-grade guns, which come under the heading of luxuries.

We, as sportsmen, would not hesitate, provided we had a good income, to purchase the best guns, but unfortunately the majority of us are only able to purchase certain kinds of guns at catalogue prices, and in turn to consider the value of the pleasure they may bring to us. We get the best we can afford, and, strange as it may seem, are often satisfied with the value received.

That money is worth only what we can purchase with it, is perhaps a truism, but it is a truism which a majority of sportsmen ignore, because they rarely find themselves with a large enough bank balance to purchase the best guns. They know, of course, that variations in the price of firearms do exist. But money does not cause a sportsman to change his viewpoint on the worth of guns, for they are not a medium of exchange. They have no more value than the paper on which money is printed. It is the estimate which the sportsmen places on guns which is of value, and this is based on the amount of pleasure derived from shooting them and being outdoors.

The price of guns is not regulated by the price of the ammunition which they shoot, but by the amount which the owner can afford to spend upon his pleasure. Therefore, among sportsmen, guns have a certain value which to others is nonexistent —an intrinsic value that comes with the feeling of possession.

There is one class of people, we have found, to whom money in itself is of value, and they are the sportsmen who have never earned it. But to the vast majority of sportsmen, money is the medium of exchange between hard labor and their needs. They labor and in return for their labor they have food to eat, a home, and a fire for warmth. We do not purchase guns with dollars, but with hours spent at a desk, behind a plow, in front of a machine, or in an office. We should not, when we purchase a gun, think of the gun's worth or cost in terms of so many dollars, but in terms of so many hours. And so, in the same way, when we open a catalogue, we should translate guns and dollars into labor. You will often hear sportsmen say of an expensive gun just purchased, "And in five minutes a month's salary went south," which is simply one way of translating pleasure into energy spent at labor.

The dollar is the interpreter, the medium, between our guns and our work, and we cannot form any true conception of the value of any gun in a catalogue until we have seen it pictured in reality, until we have seen dollars in terms of our ability to earn them, particularly in terms of labor. If dollars are worth only the guns which can be bought with them, they are equally worth only the expense of the energy used in the earning of them. And perhaps the cost of all kinds of firearms is just this —that you receive in value all that you spend.

CHAPTER X

Semi-Automatic Military Weapons

PARADOXICAL as it may seem, the most complex of all firearms, the human body, continues to offer the simplest analogy for the clarification of the story of semi-automatic weapons and their simplicity. Yet, with the simplest analysis, the paradox is clarified and the analogy is justified.

"What is a semi-automatic military weapon?" An impulsive instrument. So is the human body.

"How many types of semi-automatic guns are there?" Technically speaking, only two; first, the gas-operated gun; secondly, the recoil-operated or blow-back type of action. But automatic and semi-automatic may assume a wide variety of physical and mechanical forms and considerable variations of behavior. So may the human body, if we consider stature, race, color and creed.

"What makes a semi-automatic gun work?" Essentially, the assembly of various mechanical units, individually contributing to the accomplishment of a common cause, the conversion of chemical energy to gas, and gas to work. Thus, in the automatic system, when the trigger is pulled back the gun is "permitted" to work continuously, but in the semi-automatic system the trigger must be "pulled" for each shot fired. So the human body functions efficiently when diet is balanced, blood stream is kept free of impurities, and habits are reasonably controlled. So this progressive analogy continues, in the light of its soundness, to reveal the plausibility of its continued reference, in thought if not in words.

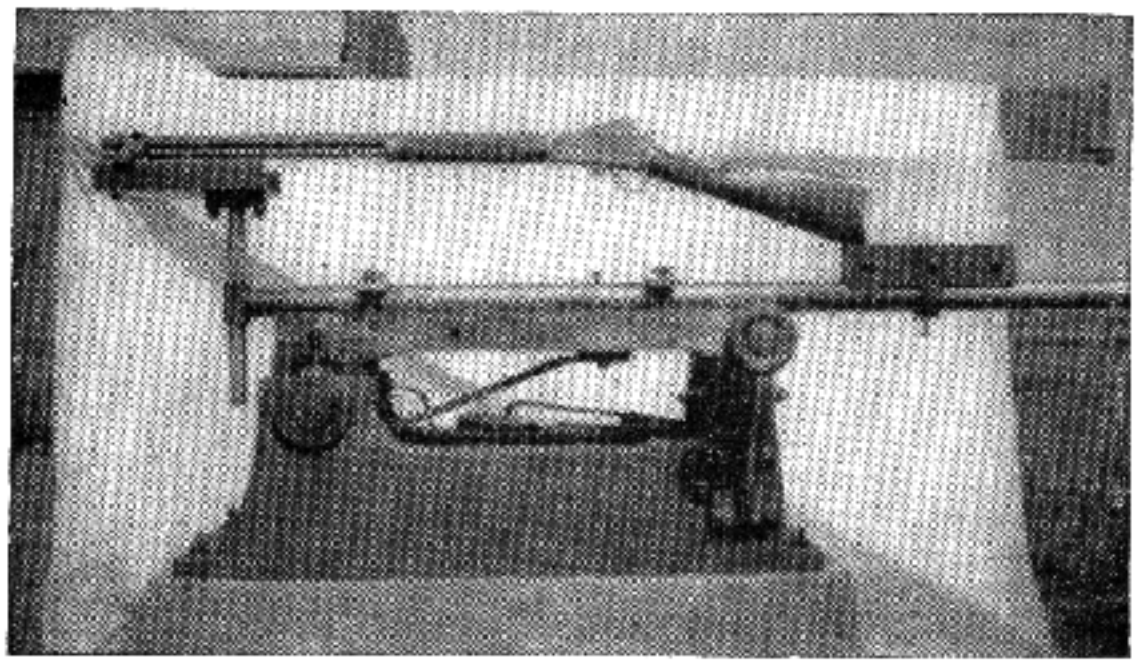

Fig. 22
The machine rest which was made by Otto A. Wagner, Ensign, Kansas. A very fine example of a home-made machine rest

Everyone interested in the subject of a fast rate of fire, and in semi-automatic and automatic small arms, is generally familiar with the fact that hardly a single six-months period went by after the First World War without some one deploring the psychological effects of our service bolt-action rifle (U. S. Springfield, Model 1903, Caliber .30) which had deprived soldiers of the fast rate of fire while in battle. However, regardless of such remarks, the service Springfield has been a very efficient military weapon for over thirty-seven years, and the wave of interest in automatic and semi-automatic rifles other than the Garand, which has swept over the newspapers and magazines these past four years, seems to indicate that the Garand Semi-Automatic Service Rifle has stood the test of just and unjust criticism, and will be the standard military weapon of the U. S. Army. It will be technically known as the "U. S. Rifle, Caliber .30, M-1," or in more popular terms as the "Garand Semi-Automatic Rifle," when placed in the hands of our newly drafted army in the year 1942.

Of course, many semi-automatic or self-loading weapons have been invented during this last quarter of a century, but we shall only touch here at length on three types; namely, the Garand, the Johnson, and the Thompson sub-machine gun, of which the latter has stood the test of time, and is popularly known as the "Tommy" gun when in the hands of our law-enforcement officers throughout the nation.

The Garand Semi-Automatic Rifle— We naturally criticise the old gray mare because "she ain't what she used to be," and, as the years roll by, a military weapon must be made much more effective and efficient than it used to be, if it is to escape criticism. So we find evidence that any semi-automatic weapon which is still in the stages of a tooling-up process in order to secure production in arming our new army must be classified as "subject to laboratory supervision," and an object of "unfinished experiments" when in the hands of our infantry.

One of the serious problems that confronted the early makers of military weapons was that of securing accurately controlled machinery. Our arsenals have been compelled to install the latest types of

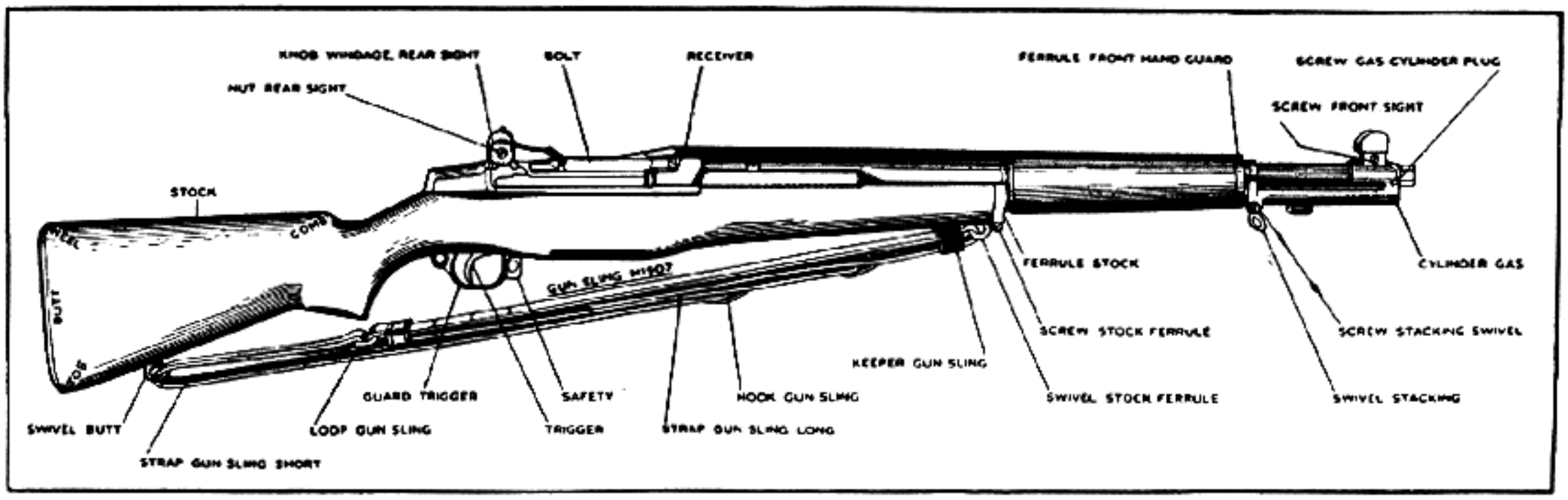

Fig. 23
Main exterior parts of the Garand Semi-Automatic Rifle

production machinery, for nowhere else has the use of automatic machinery reached the development it has attained today at the Springfield Armory to turn out the new Garand Semi-Automatic Rifle. To go back a little more than half a century, out of 800 men employed in the production of military weapons in Birmingham, England, 110 were found to be at work with hand files. A comparison with the Springfield Armory showed that of the 1600 men employed only 11 were filers. But it must be noted that nearly a century ago a large part of the work on arms in the Springfield Armory was done by men with files or on a grindstone.

Year by year, machinery has been adapted to new uses at the armory, until today on the new model of the Garand rifle hand work is practically

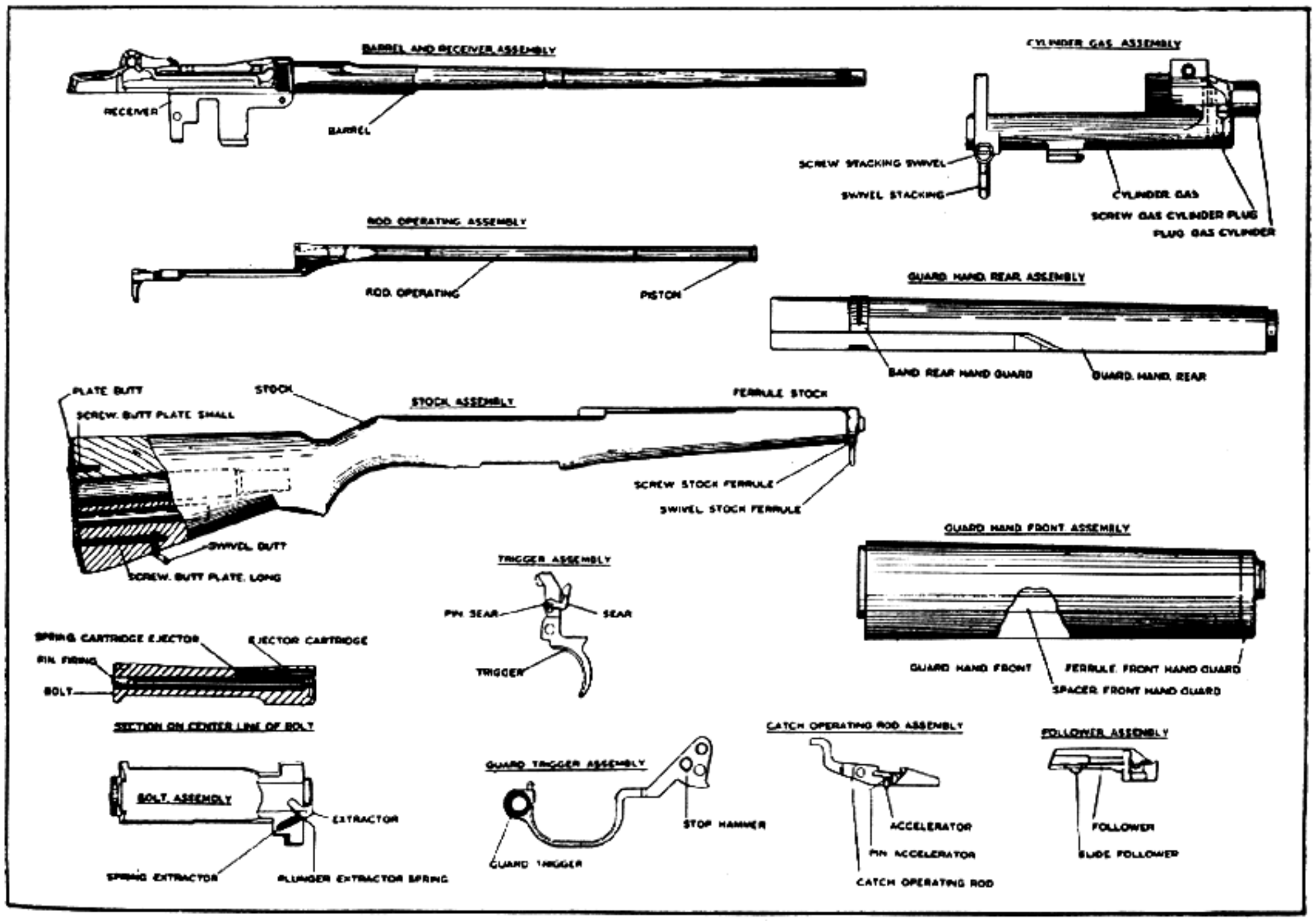

Fig. 24
Main interior parts of the Garand Semi-Automatic Rifle

unknown, except those parts which are buffed on circular buffing wheels; namely, the receiver, bolt and extractor. So entirely are steel and wood reduced to their final sizes by the positive and regulated action of drills, reamers, rifling heads, broaches, and milling cutters of various forms and sizes, that in this thoroughly organized arsenal the operations on this weapon, from the minute that the forgings encounter a machine, are exactly numbered as well as classified.

These operations are termed "cuts," and the amount of work required on this particular weapon is indicated by the number of cuts or operations needed to complete it. The Garand receiver alone requires between 120 and 130 operations on a great number of special machines to bring it to its final stages of completion. Each succeeding operation is the well-judged result of carefully planned experiments in the early stages of its production, in order that precise manufacturing tolerances could be established to assure production of the component parts, directed to the end of economizing labor in perfecting contour and size. With the new, efficient automatic machinery now installed, the final process leaves all parts of this new military weapon so perfectly finished that a file is seldom needed.

Thus, in executing a large order to equip two million men in the field with rifles, one device after another has been adopted to reduce the number of operations or "cuts." Although the arsenal receives a certain appropriation to manufacture so many rifles, it is required to render an account of its expenditures to the War Department at Washington, and the armory ultimately gains the advantage of any reduction in the cost of production. It should be remembered that the manufacture of weapons of this type involves the fabrication of a multitude of distinct parts, each of which has its individual character and cost to be considered. This new semi-automatic arm has seventy-two component parts, including springs, pins and screws. The constant changes which took place before this weapon was placed in production are indicated by the fact that all parts are now interchangeable with the corresponding parts.

An essential element in the system of producing these weapons is the use of gauges to test the accuracy of the work as it progresses. The mechanical definition of the gauge is "any instrument used to measure." It may be a pattern from which the gun stock has taken its shape; a plug to fit a hole and determine the exact size of the established dimension; an electro-limit gauge, which is a precision instrument to measure a diameter of a cylindrical part to the millionth part of an inch; or an instrument to determine the alignment of sights; a thread gauge, micrometer gauges, plug gauges, all gauges to detect the slightest variations from the true established sizes.

For each component part of the new Garand rifle a set of gauges is provided, not omitting the smallest screw. The amount expended by the Springfield Armory in perfecting its system of gauging all the parts of this weapon is a great fortune in itself. Of each gauge or set there are two, a maximum and a minimum, the rule being that a part shall neither be less than the minimum nor tight in the maximum. Not only is there a double set of gauges for each component part, but each of the hundreds of finished cuts required to complete a certain part has extra sets of gauges held in reserve, together with the master gauges to check all gauges used on the operations.

The preservation of the gauges is a most important duty of the chief gauge inspector, who is held responsible for both master and working gauges. These standards are kept carefully locked up in a vault as large as a good-sized room, with compartments built from the floor to the ceiling to hold them. Each machine operator is furnished with a working set of gauges, and another set is divided among the inspectors, who are held responsible for the work produced by the machine operators. The gauges used for the inspection of the cartridge chamber are renewed each week, to avoid the infinitesimal change in size resulting from the slight wear to which they are subjected.

The superior quality and marked uniformity of the new Garand Semi-Automatic Rifle will be due in part to the thorough system of inspection to which it is subjected. The inspection at Springfield is now more thorough than at any previous time in the armory's history, for an examination of any one of these rifles will show upon each of its seventy-two parts that, aside from the hundreds of special operations performed upon these pieces, an inspector has made careful observations and tested the part thoroughly by gauge.

As an example of the thoroughness of inspection, we shall select the barrel, which goes through a great number of consecutive operations in which various machines are used—gun-barrel drilling machine, reaming machine, rifling machine, chambering machine, threading machine, turning and grinding machine, etc. The first inspection is made after the barrel is drilled, preparatory to the reaming operation; another after the barrel is reamed; again after it is rifled; again after it is chambered; and finally after it has been chambered, threaded, ground to size or completely finished. The gauges used in the final inspection are of the finest construction and scientifically accurate to the one-

millionth part of an inch. A deflection of 0.0001 inch in the sighting of one of these weapons can be easily detected. Without such accuracy the wonderful records of the Model 1903 Springfield at Camp Perry would be impossible.

The most exact inspection is, of course, given to the barrel, receiver, bolt, gas cylinder, etc. The inspection of the other parts of the gun is thorough, though less difficult. After the parts are assembled into the gun proper, each piece is carefully tested to see that its corresponding parts are well adjusted and interchangeable without difficulty, and finally the work of all the inspectors is passed upon, the last inspector examining every part of the assembled gun to see that the official stamp of approval has been impressed upon it.

The stock and forearm of the gun, made of black walnut, is first sawed into rude outlines of the shape it is finally to assume, before being submitted to the operations of turning, grooving, etc. The wood is carefully examined to see that it is straight-grained, well seasoned, and free from sap and worm holes. A practised nose will detect the smell of unseasoned wood as surely as a trained bird dog discovers a scent when he stands at point before the quarry.

Changes in Caliber—The caliber of military arms during the American Revolution was seventy-five hundredths of an inch (0.750), and it has been reduced by successive stages until it is now three-tenths of an inch (0.300). Down to 1866 the caliber of the Springfield musket was fifty-eight hundredths inch (0.580). In 1866 it was changed to fifty hundredths or one-half inch (0.500), again in 1873 to forty-five hundredths inch (0.450), and again between 1894 and 1898 to the present caliber of three-tenths inch. The length of the barrel, originally forty inches, has been reduced to twenty-four inches. The bullet meantime has gone through various mutations until it has arrived at its present form with a boat-tail base.

At the Frankford Arsenal in the year 1922 we had an appropriation of $22,000.00 to manufacture a satisfactory cartridge, without the caliber being specified at the time, and $16,000.00 to experiment upon a suitable automatic or semi-automatic shoulder arm to take such a cartridge. Out of the latter appropriation, three Model 8 Remington autoloading rifles were purchased; namely, caliber .25, caliber .30, and caliber .35. After many tests with these guns and their ammunition, it was decided to experiment upon a new cartridge in between the caliber .25 and .30 Remington. From the ballistic point of view, and with much figuring among army engineers, a caliber .276 was decided upon, due to the fact that a cartridge of this caliber would develop the best possible accuracy ballistically, in theory, at least. It was also figured out that the use of this smaller cartridge would facilitate the design of a reliable and durable self-loading weapon within the prescribed weight limit, while the lighter weight of the cartridges would reduce the soldier's load.

The work accomplished at the Frankford Arsenal in the testing of the Remington self-loading arms, however, was all imaginative, with no opportunity to develop a semi-automatic rifle; the rest of the funds were transferred to the Springfield Armory, and there the experimental work on rifles to take the caliber .276 cartridge was begun by Mr. John D. Pedersen, and the Garand was designed and developed by Mr. John C. Garand. Both Mr. Pedersen and Mr. Garand carried on their experimental work at the Springfield Armory, allowing the experimental department at the Frankford Arsenal to develop the caliber .276 cartridge, which, by the way, was not completed until after 1925.

The Pedersen Rifle—The Pedersen Semi-Automatic Rifle had some very favorable characteristics; namely, that it was a recoil-operated action, in which the barrel recoils a short distance, together with the bolt, until the full angle of the camming action takes place, and the bolt-block moves to the rear, which is similar to the Luger automatic pistol action; whereas, the Garand rifle is of the gas-operated type, which is operated by a lever underneath the barrel by the escaping gases from the muzzle. Studying the difference in design, the army board of engineers considered it the better of the two, and it was adopted, and recommended to be designed to take the caliber .30-06 ammunition, due in part to the fact that this size of cartridge had shown better ballistic qualities than the caliber .276 cartridge in extensive firing trials. Even though the Pedersen gun was discarded by our War Department, it found a ready sale to a foreign government at a very high price, and is now seeing service, as I understand.

The merit of an inventor lies in his style of designing; his true originality lies in his thought of his design and in his manner of bringing his invention to perfection—that manner of expression which distinguishes the thing he may invent, whether it be a gun or a garden rake, which is different from that of another brain. So, Pedersen's invention was his own idea, and he had a right to sell it to the highest bidder; but now it is Mr. Garand who moves into the picture, for it will be his rifle with which our troops are to be equipped, and it must be given

the honors, for his gun had the admiration of the army engineers who accepted the design.

How the Garand Rifle Works—The Garand Semi-Automatic Rifle varies somewhat from the conventional type of gas-operated weapon in that there is no small hole drilled in the barrel for taking off powder gases to operate the mechanism. Instead, the muzzle of the barrel is provided with a sleeve, and while the bullet is passing through this sleeve and just as the base clears the muzzle, a small measured amount of gas is diverted through a port at the muzzle into a cylinder where it impinges upon the piston of the operating rod, driving it to the rear. The location of the port at the muzzle rather than at some point near the breech permits the use of gas at a lower pressure, thereby decreasing the fatiguing stresses on the operating mechanism of the weapon.

An opportunity to study the Garand Semi-Automatic Rifle came to me while at the Springfield Armory, and I found its working parts of particular interest, especially the bolt operating rod which extends underneath the barrel from the muzzle to the bolt. There a recess is provided in the rod which engages a lug on the bolt just to the rear of the front end of the bolt. This recess and the lug on the bolt have cam angular surfaces so arranged that as the operating rod moves to the rear, the bolt is first rotated in the same manner as the bolt in the Service Springfield rifle, until the locking lugs clear the locking recess in the receiver. After this rotating movement is completed, the bolt is carried to the rear by the operating rod. During this movement the operating-rod springs are compressed, the fired case extracted and ejected free of the action, and the firing mechanism placed in a set position.

After the bolt has reached its extreme back position it is immediately carried forward to the firing position by the operating rod acting under the tension of the operating-rod springs. During this forward movement of the bolt the top cartridge is removed from the clip—which holds eight cartridges—and is carried forward into the chamber. When the last cartridge in the clip has been fired, the clip is automatically ejected and the bolt remains in the open position. As another clip is inserted in the magazine, the bolt moves forward, feeding the top cartridge from the clip into the chamber. The striker or firing pin is so arranged in the bolt that it cannot protrude through the firing-pin hole until the bolt makes its forward movement and rotates upon the cams in its locked position. An easily operated safety feature is built into the front of the trigger guard, which disengages the striker from the sear when in the *safe* position.

The rear sight is mounted on the bridge of the receiver; that is, the housing for the sight's mechanical operation is an integral part of the receiver, located at the rear of the clip opening, and is of the aperture type, the diameter of which is 0.070 inch. The front sight is of the blade type protected by guards similar to that on the British Enfield.

The rear sight is raised and lowered by means of a knob located on the left-hand side of the aperture housing. Elevation graduations are engraved on the knob's outer surface in one-hundred-yard indentations up to 1200 yards. Between the hundred-yard impressions there are indentations in which finer adjustments are made, each click being equal to 25 yards of elevation. Windage adjustments are made by means of a knob on the right-hand side of the sight housing directly opposite the elevation knob.

Before leaving this subject of the aperture rear sight on the Garand Semi-Automatic Rifle, we may affirm that it would certainly be better for many of the newly drafted men, especially those who have never had much experience in the shooting of small arms, if they were to become more generally alive to the value of this type of sight. In their youth they were forced, we may suppose, to begin their shooting career with open sights, for then aperture sights were a novelty; but now, having the opportunity to test their skill with such a sight, many will be attempting to alter the size of its aperture. Many of the more experienced men will be unable to perform well with the present size of aperture, and if it is slightly enlarged will make better scores on all ranges. We cannot deny, if we are honest with ourselves, that we must enlarge the size of the aperture in order to accomplish better shooting results, whether on the range or on the battlefield. And yet we can recall with enjoyment some record scores made when testing and sighting many big-game rifles at one thousand yards with the same size of aperture as that now found on this semi-automatic rifle.

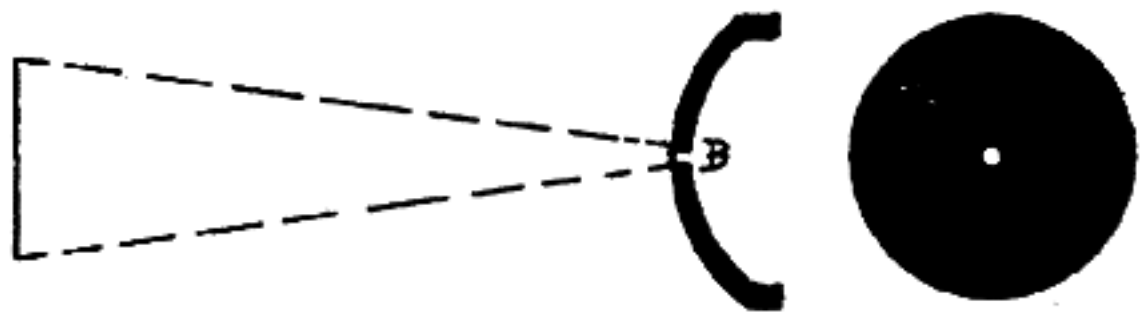

Fig. 25
An aperture is nothing more than a hole in a disc
B = The direction in which sighting is directed

Looking through a hole 0.007 inch in diameter, drilled through a disc, we see little if anything. But remove the lens from a camera, attach the disc in place of the lenses, and it will be possible to take a picture which may be a photographic masterpiece.

Before the time of Aristotle, the miniature hole in a disc was known as an optical device. Discovery of lenses and their adaptation to the telescope forced it out of men's minds until it was completely forgotten. Then, a century ago, when rifles were able to shoot some accurate scores, it was again brought to the front, and attached to many muzzle-loading arms. And today many expert marksmen, yearning to do some unusual shooting over long ranges, turn again to aperture sights. Actually, this sight on the Garand rifle is but a disc with a small hole drilled in the center! Discs are made by the sight companies as small as 1/32 inch and up to nearly 1/4 inch in order to suit the sighting caprices of various marksmen. It is certain that one's eyesight can rarely accommodate itself to any and every size of hole in a disc. One's choice must be allowed to fall upon many aperture sizes until the proper-sized opening is found. Therefore, there must be an opportunity for selection of diameters for various individuals, some graduated to the decimal of an inch, others to a larger fraction of an inch.

The fascination of sighting a rifle through a pinhole for the first time is not only the advantage of simplicity; most marksmen prefer it to the average cheaply made telescope sight. It provides, for example, a notable softness of a target's outlines which contributes considerably to the eye's natural adaptability to avoid unnatural strains. It also permits a highly desirable control over the angle of view, and it has an unlimited depth of focus; that is, it can focus on any object ahead of the front sight, regardless of its distance. It presents the entire target or object in its correct perspective, without the blurring of nearby or distant objects, particularly if the disc has been located in the correct position for the eye.

Sensations caused by light striking the retina through the cornea give us the sense of vision. The outer surface of the cornea possesses a high degree of polish and smoothness; it recedes like a convex mirror, giving a clearly defined, but diminished and correct, image of any target or object in front of it. The transparent membrane on the anterior part of the outer coat of the eyeball is nearly perfect for the purpose of transmitting light, for it allows every detail of the iris's radiant surface to be seen. But, when examined through a magnifying glass, it reveals something of its fibrous structure by irregularly reflecting the different elements of white light, so that the path of its beams renders those particles visible, just as will light passing through water or fog suspended in the atmosphere. This is a most important point to be considered in aiming through an aperture such as that on the Garand Semi-Automatic Rifle.

The Thompson Sub-Machine Gun—About the time when we were experimenting with the caliber .50 machine-gun ammunition, General John T. Thompson perfected his sub-machine gun in a small experimental shop in Cleveland, Ohio. After completing some experimental models, General Thompson had the Colt Patent Firearms Company, Hartford, Connecticut, manufacture a number of the caliber .45 models, which fired the caliber .45, Model 1911, automatic pistol cartridge. Although he had experimented on an automatic weapon to take the .30-06 cartridge, this was not so successful, and was discarded. However, he continued to improve on the caliber .45 sub-machine gun, which was then sold to various police departments over the entire country, as well as to our Army and Navy Departments.

The first guns manufactured, weighed but seven pounds. They had no buttstock attachment, and no sights. The later models included sights, two-hand grips, buttstock, and weighed eight and one-half pounds.

The Thompson sub-machine gun action is the simplest in any semi-automatic or automatic action now manufactured. A person understanding guns can be taught in thirty minutes to dismantle and reassemble it. There are no screws, inaccessible pins, or other parts requiring a tool. Complete disman-

Courtesy Auto-Ordnance Corporation

Fig. 26
The model 28 A C Thompson Sub-Machine Gun

tling of all removable parts except grips can be accomplished without the aid of any tool. The original model, which was purely experimental, had only eleven parts. The present model contains thirty-eight individual parts, including all screws, pins and springs.

The operating principle of the Thompson Sub-Machine Gun is purely a blow-back system, and the work is performed by a low-pressure cartridge. The pressure-friction necessary to hold the breech closed until the bullet has left the barrel is produced by means of a small wedge, and the rate of fire is 750 shots per minute.

The loading of the Thompson gun is exceedingly rapid, with either clip magazine or drum. The twenty-shot clip magazine can be charged in a very short time; the fifty-shot drum requires about five minutes. The latest model, with the buttstock attached and the fifty-shot magazine in place, weighs 15 pounds 6 ounces.

The Johnson Semi-Automatic Rifle—The Johnson Semi-Automatic Rifle is a recent development on the recoil-operating system, in which the barrel recoils to the rear for a distance of ⅜ inch and the bolt is locked to it until the camming slot is reached; in this backward movement the bolt is rotating until the barrel stop is reached. When the barrel reaches the stop in the forward part of the receiver, the bolt is permitted to continue to the rear free of the barrel, carrying the fired case with it. In this movement, the fired case contacts the ejector, expels it free of the action, and continues back to cock the hammer by compressing the striker-action spring; at the same time it compresses the bolt-action spring in the buttstock, until it is finally stopped by a buffer plate. Completing this cycle, the bolt-action spring returns the bolt, and in its forward travel pushes ahead the topmost cartridge from the clip magazine. While all this mechanical movement is taking place, the barrel-return spring, which is housed in a perforated tube ahead of the receiver, brings the barrel forward to its normal position, and the cam rotates the bolt into its locked position with the cartridge in the chamber.

Practical in its appearance, this gun also employs the most sound fundamental principles in design. It has short recoil, in which the barrel and bolt move approximately ⅜ inch to the rear before unlocking, so that the breech pressure is reduced to residual limits before the unlocking of the bolt occurs. The locking and unlocking functions are purely mechanical in operation, regardless of the pressure developed by the cartridge, but being reduced to low limits, free operation is in evidence. Before the complete cycle of this operation takes place, the bullet has emerged from the muzzle. When the bullet emerges, the barrel, locked to the bolt, starts to make its rearward movement, which is a traveled distance of 3/16 inch, and then the bolt begins to unlock. After reaching the approximate length of travel, the bolt is completely unlocked, and the cycle of movement takes place, firing at the possible rate of 600 shots per minute, though the normal rate from a clip-magazine would be but one shot per second, or sixty shots per minute.

The bolt is ⅞ inch in diameter and 5 inches long. In place of the conventional two lugs, as on the Springfield Model 1903 rifle, it has eight locking lugs. These are evenly spaced around the head of the bolt. On the opposite side of the bolt is the slot for the ejector. The extractor is flush with the bolt's diameter, and rotates with it, there being no clip to hold it in place; the knob-like operating handle locks the extractor in place, instead of a clip being employed as on the Springfield bolt. The cams and camming action are made on very abrupt angles of about 40 degrees. The rear end of the bolt is linked to a strut 8½ inches long, which transmits the pressure of the action spring, which is located in the buttstock, similar to most autoloading designs.

A novel feature of the Johnson Semi-Automatic Rifle is its firing mechanism, which consists of a pressure contact of the sear against the bottom of the hammer, without recess or notches, and requires merely the straight sliding action of two flat surfaces to secure the hammer release. Flat-surface friction and trigger-spring tension are the only pull resistants, resulting in a really safe trigger release,

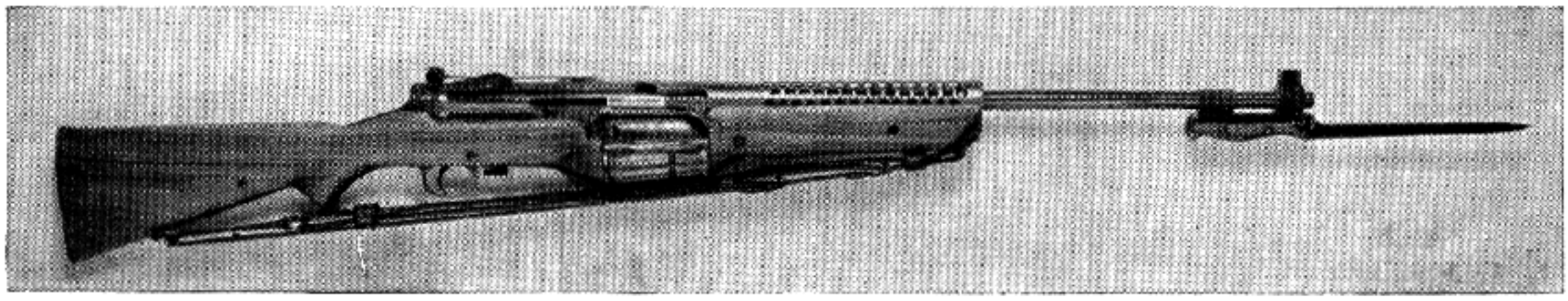

Fig. 27
The Johnson Semi-Automatic Rifle

and a most reliable design. Just forward of the trigger guard is a right-hand safety, with a grooved thumb lever that can be turned from side to side and engages a notch in the sear limb.

Either of the two systems used in the Garand and Johnson semi-automatic guns is quite practical. One is gas-operated, while the other is recoil-operated, the bolts merely gliding to the rear after being disengaged. At this point, and without either rifle having seen hard military service, one can hardly theorize as to which weapon would be the more efficient. At first glance it becomes apparent that the Garand bolt movement, in feeding the cartridge into the chamber, does not have to travel over much wasted space, so that it has much better feeding principles than the Johnson gun. On the other hand, the front-locking lugs on the Johnson bolt should give more accurate semi-automatic operation under fire, because the locking lugs on both sides of the bolt head absorb the recoil of the explosion, so that this is not taken up by any of the weaker parts of the mechanism, whereas, in the Garand the locking lug on the left-hand side of the bolt embeds itself in a complicated cam cut in the receiver, which is liable to give considerable trouble after being fired a number of times, due in part to the wear which will take place at that point.

Far more important than the principle of either semi-automatic system is the problem of what methods to employ in order to produce a large number of guns in the shortest possible time. We must find weapons which can be placed on an efficient, simple manufacturing basis. Knowing the difficult methods employed to produce the Garand rifle at the Springfield Armory, I may refer to one case in particular, though many others could be recalled. While on the tooling-up operations of the Garand receiver, I suggested having the magazine slots broached in a straight line instead of their being on a radius of 50 inches, for they were only clearance slots for the ears on the clip. The machine used for this operation, together with the tool provided, produced a very high percentage of scrap, and the receiver is the most expensive part of the whole gun. My suggestions fell by the wayside. After a lapse of three years, business carried me to Detroit to discuss some metallurgical problems with the Ex-Cello Manufacturing Company, and as the superintendent and I were passing through the toolroom, he pointed out a very large broach in the process of the grinding operation, and mentioned the fact that his firm had an order from the Springfield Armory for three such tools to broach the magazine opening as well as the clip slots. My memory naturally harked back to the day when I had made such a suggestion, and my critical sense was then in a position to inform my emotional sense that it really took the military rulers at the armory nearly three years to wake up to the need of a simple manufacturing change in order to eliminate a high percentage of scrap from an impossible production operation. And I am still wondering why so much newspaper criticism, continued over a period of years, did not seem to have any effect. It is eighteen years since we had our first appropriation to experiment upon a satisfactory semi-automatic weapon, and today very few of these weapons are in the hands of our troops.

To manufacture a rifle with efficiency, the parts of the weapon must not be of a complicated form which requires complicated cutting tools, jigs and fixtures, machinery, and complicated set-ups on standard production machines. Complicated machining operations slow up production. From the standpoint of simple manufacturing operations, the Johnson gun seems to have more parts which are comparatively easy to manufacture on a production basis than the Garand. As a matter of fact, either gun, if complicated to manufacture, is not the answer needed in our ever-changing methods of warfare.

Far be it from me to believe that a semi-automatic rifle will be permanently applicable to modern warfare. Even if we accepted all the weapons that have been patented, they would only serve their purpose for a time. A just analysis of either weapon would merely lead to a war of words. In our primitive state, and only armed with our bolt-action Springfield rifle, harmony was a simple matter. But in the present state of feverish preparedness activity, each person in a position of authority is bent upon carrying out his ideas, whether right or wrong, and cannot see why he should subject his will and thought to others in a less authoritative position. Of course, our troops should be armed with a good light semi-automatic weapon, one which is superior to any weapon carried by those who may make war upon us; but we do not take into consideration the fact that some of our best semi-automatic weapons patented in the last fifteen years have been purchased by nations who are both willing and ready to make war upon us. Those who dream of efficient weapons above those of other nations dream of inefficient preparedness for such a time. And only time and a war will tell which nation has the most efficient semi-automatic shoulder weapon.

Our weapons of today will appear in 2040 as romantic and full of wonder as do the American Revolution guns to those who admire the past. Two centuries hence our present weapons will be museum exhibits only, guns to be examined curiously, affec-

tionately, odd relics of 1940, glass cases to be passed. Then a third century, following, will recognize in us a painful stage of innocence from which it has managed to emerge, pointing with pity at the millions we expended for simple shoulder weapons of war.

Such is time's spiteful revenge, difficult to accept, that we who now consider ourselves at the top, will appear in a succeeding age as models of simplicity and ignorance. Yet in the same way that we now look back longingly from our artificial existence to the direct outdoor life of the western pioneer, so will the soldier and the small-arms designer of another period look back on us.

Perhaps it is to no great purpose that we should spend so much regret over the destruction of plain old military arms, but whatever new weapons may be designed in the future, the result will be identical. The Springfield, which seemed to us so wonderful as a military weapon, so accurate, and so inexpensive to manufacture when it was developed by our War Department back in 1903 at the Springfield Armory, a weapon which satisfied the needs of the Army, the Navy and Marine Corps, will be merely a relic for which some old soldier, sailor, marine or gunsmith will have a sentimental attachment. Yes, what will be the fate, too, in another half-century, of the Garand, the Johnson, the Springfield—and of us!

CHAPTER XI

A Broader View of Craftsmanship

THERE IS something very fine and satisfying about good tools. The man whose hobby is working with gun stocks is proud of them. He should be, for he buys nothing but the best, taking care to keep them in perfect working condition at all times. His chisels, saws, planes, and bits are oiled as carefully as was his grandfather's shotgun. He has a genuine affection for the grain and texture of fine woods for gun stocks, and will run the palm of his hand caressingly over a well-polished and finished piece of walnut furniture.

No connoisseur ever looked at a Boss or Purdy shotgun with more delight than he feels in examining a fine old Kentucky flintlock rifle, the stock made from bird's-eye maple by some home gunsmith who two centuries ago searched perhaps for two years before he found the right piece of wood.

I know of no better way to improve the shining hours of winter's after-dinner leisure than to work in the sanctum of one's own shop, preferably a building away from the house, with a wood-burning stove and the family dog stretched at full length among the shavings, yawning contentedly now and then. A shop is a family man's refuge and, by an unwritten connubial law, it is—or should be—respected as inviolable.

It is interesting to know that gunsmithing as a hobby has become immensely popular among Americans since the close of the Second World War, which is supposed to have caused many important changes in our recreational habits. Undoubtedly an impressive number of leisure hours are now being happily spent in the home workshop, whether in the basement, garage, outbuilding, or attic. As the California ranch-type of home becomes more common more of these workshops will be found at ground level, thus making them more accessible and in many cases relieving the home from the assorted racket of circular saws, band saws, drill presses, wood planers, grinders, polishers, sanders and what have you.

Small power-driven tools have always fascinated that tool-using animal, man. Instinctively he welcomes electrically driven tools that not only save him long hours of monotonous hand labor but also make possible the accomplishment of more and finer tasks in a fraction of the time his ancestors required. As these power tools become more varied in type and more precise in their results, hundreds of "how-to-do-it" books come into the market, stimulating the sales of these tools to a growing percentage of home craftsmen from coast to coast. Lumber sales to the home mechanic have also increased, for more and more men whose hands are not all thumbs are repairing their own homes and in many instances building them from blueprints supplied by the lumber companies.

The home workshop provides the impulse for many congenial hobbies such as gunsmithing, cabinet making, gem and mineral cutting, telescope making, miniature locomotive making, and many others. There are at least two million such workshops in this country today, and the sales of craftsmen's tools, both hand and power-driven, have astonished even the companies that manufacture them. It is very easy indeed to invest $1,000 or more in a small basement or backyard workshop. True, the investment frequently bears little relationship to the tangible returns but it does serve to attach thousands of men to some absorbing and congenial activity, keeping their minds pleasantly occupied through many long hours that would otherwise be valueless to them.

The activities in the home workshop should have a purpose. It is my own impression that to many men any kind of a workshop means only sweat, headaches, chips, dirt, noise, bruises, grime, and grease—but to an enthusiast who knows what he is doing and how to do it these activities, however exacting, are a relaxation. And, if we are to believe the doctors, both his health and efficiency depend upon a man's ability to relax. This is where the hobby comes in.

Relaxation takes different forms, according to individual proclivities. One man I know finds an outlet for his nervous energy in repairing various kinds of antique gun locks and studying the mechanical characteristics of all kinds of British and early American gun actions which he buys here and abroad. To be sure, he bores his friends by talking guns on the slightest provocation and he is particularly happy to dilate at length upon his latest adventure in the world of gun locks. Yet this man is

an outstanding physician, and no doubt owes much of his happiness in life and his success in his profession to this special form of relaxation.

Another man known to me has a private book bindery where, with two of his friends, evening after evening is spent in the delightful task of restoring old and rare editions. One end of a large room is filled with his printing and binding equipment, while all around are stacks of books waiting for his attention. He once showed me a beautiful volume which he had just restored, lovingly fingering the soft leather as he read to me some favorite passages. Here, in the hours of his recreation, was a personality quite unsuspected by those who knew this man only in his office.

We are inclined to think of efficiency as expressed chiefly along industrial and mechanical lines, not realizing that many seek—and find—deep personal satisfaction in mechanical creations as elaborate as miniature locomotives, ocean liners, and even battleships. One may be an amateur telescope maker, another finds happiness in exploring the night sky for distant comets, a third may be upon the trail of some new chemical having unsuspected medical or industrial possibilities. But for all of these men attention was focused more upon the value of life than upon the crude practical value of their activities.

The trend of the times is definitely towards amateur science. One of my friends, wishing to know more about the atom and its behavior, constructed working models with nothing more than scrap materials. In a workshop cluttered up with small batteries, wooden models with magnets attached here and there; wires, strings, breakfast food, hair combs, sticks nailed to this and that, he was able to make his atoms perform to the astonishment of anyone who wanted a demonstration. What seems most remarkable is that he does not have more than ten dollars invested in equipment which yields results as satisfying to him as those which cost millions of dollars in the great physical laboratories of our universities.

Essentially, the contribution of this book to the art and technique of gunsmithing is one that cannot be analyzed. It does not lead to thorough knowledge, any more than knowledge of a foreign country can come solely from a guide book or a hasty review of its industries. But it does give the attentive reader the principal facts about guns and it will show him how, with patience, ingenuity, and a disciplined imagination, he may become a skilled craftsman-gunmaker.

Modern methods of gunmaking are very different from those in use a hundred and fifty years ago. In former times the component parts of gun locks were made by hand with the aid of files, and even these simple tools were made by a blacksmith. Each hole in the lock-plate was drilled separately by crudely made drills, and each part separately fitted into place, so that the lock was gradually built up as one would build a house. Each component part, of course, only fitted its own lock and the parts were not interchangeable.

Time has altered all of this. Today, by means of expensive automatic machines, the separate parts of guns are turned out by high-speed form tools moving independently of the will of the operator, whose only duty is to stand by and see that the parts are produced. The machine is a servant that never tires and never talks back, demanding only that its cutting tools be kept sharp and true to form. The operator is needed only for supervision, pressing buttons, pushing levers, watching control mechanisms: he does not even have to change defective or dull tools—that is another man's job. From time to time he measures the product with elaborate instruments known as gages to see that it conforms to a master unit or to a blueprint.

When all parts have been thus manufactured you have a large number of boxes, each with a thousand or more gun parts in it, each part exactly like every other in the same box. You take a bolt or a spring from one box at random; to this you add, item by item, screws, springs, actions, strikers, extractors, sights, barrels, triggers, trigger guards, barrels, and so on until you have a complete array of everything needed at that stage. All that is then left to do is to assemble the parts as one would the pieces of a jigsaw puzzle. Everything fits; there is not even any filing or burring to do.

Such perfect interchangeability demands a precision to within the thousandth part of an inch, which means automatic machinery of perfect design and often of very high cost. But the resulting uniformity of product leads to a surprising economy in manufacture. You can now purchase for thirty cents a better gun part than could have been secured for ten dollars a century and a half ago. The savings may be spent for other equipment, or for ammunition.

Guns made in this manner are, of course, products of industry, not craftsmanship. They make no pretense to be artistic; they are simply—and superbly—useful. The machine tool, which can do so many things at the cost of so little labor, may be necessary to the craftsman but it is also a warning —a warning never to confuse speed with skill or utility with beauty.

Turning to comparatively ancient times, we

may find, in the John Woodman Higgins Armory, Worcester, Massachusetts, an exhibit showing a "screw-bolt" fixed upon a suit of armor of the 15th century. How many who see this exhibit stop long enough to wonder how this screw-bolt was made, when or where it was invented, or to realize that the very tools used to make it were hardly less interesting than the thing itself? Who taught its principle to the Romans? And was it because the Chinese preferred to use gunpowder for fireworks to amuse people rather than for bullets to kill them that they failed to develop the gun and thereby lost countless battles with the Western Powers?

Coming down to the end of the 18th century, we find that the construction of machine tools was considered an engineering art and the threading of bolts and nuts a great achievement. Even gear wheels were cut by hand. The circumference was laid out by compasses or dividers, holes were drilled round the rim and the cut-out sections leading into the holes were shaped by special files. Large machinery was all shaped out at the forge and by the file. Although they could not achieve tolerances closer than ⅛ of an inch—and that at the cost of immense patient labor—their guns were beautifully made. Locks and trigger guards were engraved with exquisite patterns; stocks were richly inlaid with mother-of-pearl and ivory—even duelling pistols were works of art to be jealously treasured by their owners.

Then came the Industrial Revolution and with it the era of severe technical accuracy. Measurement became the task of science which, if not hostile, was at least indifferent to the demands of art. Exclusively utilitarian in purpose, the machine disregarded beauty in all the domains formerly ruled over by craftsmen, so that our modern American machine tools, from monkey wrenches to lathes, are marvels of effective design and precise workmanship—fitting implements of a nation that wears overalls on weekdays and drives expensive automobiles on Sunday. One has only to compare an old squirrel rifle, with its inlaid butt stock and forearm, with a modern rifle to note the difference. Ornamentation, once inseparable from a fine gun, has either completely disappeared or is little more than a spasmodic, usually feeble imitation of the past.

People no longer believe in the old hand operations in metal-working when a machine can be used more efficiently. It is possible, of course, with a file and a keen edge scraper and days of patient labor to produce two flat metal surfaces so perfect that when pressed together one piece will lift the other like two gaging blocks as manufactured by Brown & Sharpe. But this would be wasted labor when a surface grinder and a lead lap will do the job as well in a fraction of the time. No longer are our military rifles built up at the Springfield Armory as were the muskets of a century ago, fitting part to part. By the employment of hundreds of special machines thousands of parts are forged and milled to shape, heat-treated, polished, blued, and assembled into our most modern military rifle. Comparatively unskilled workmen can easily be trained to handle most of these operations. Where exceptional skill is required is in the making of the special forming tools, cutters, reamers, dies, and precision gages accurate to within the ten-thousandth part of an inch. Thus human labor is concentrated more and more on tool design, on the making of tools and dies to close tolerances, and on supervision.

But machines cannot satisfy the human craving for art. The same man who may use tools in some form is by nature a creative being, eager to work with hands directed intelligently by the mind, never really satisfied until he becomes a craftsman. The contentment that man's nature demands is impossible until the creative drive can find expression in a harmony of hands and brain which leads to the parallel harmony of precision and craftsmanship, neither intruding on the domain of the other.

Knowledge and skill—these are the essential ingredients of craftsmanship. One maker of gun stocks has a skill peculiar to himself, using checkering tools in a manner developed from long practice and not to be easily taught to or imitated by another. With a set of such tools an amateur would quickly learn the great difference in results from using dull or sharp-edged ones, pushing with or against the grain, etc.

No gunsmithing book, nor, for that matter, any book on craftsmanship, can possibly take the place of constant practice in the handling of tools. Skill must be learned at the bench. Even more important, by starting young and by study the chapters on stock making to help you in your home workshop, you will lay the foundations of a secure ability in your chosen field, as well as add to the richness of your life.

There are, indeed, many young boys who have a real desire to become craftsmen; they are physically apt and have mental faculties well developed to direct their hands in scientific and creative activities. The parents of such boys should encourage them in every way, presenting them with tools and apparatus selected according to the following simple principles:

1. Many of the things a boy needs can be easily supplied by bits of wood, metal, wire, string,

etc., provided that he has someone to give him useful hints on how to manipulate them.

2. If and when you give him tools, give him real ones, not toys. He wants "thing-makers," not mere playthings.
3. He should also be provided with a reasonably dry and comfortable place to work in, and become acquainted with a good carpenter, tool-and-die maker, or gunsmith in the community.
4. He should never be allowed to work aimlessly with tools, but encouraged to design and construct something really useful, continuing with a job until it is finished.
5. The construction of laboratory equipment with which to explore simple scientific facts is more useful than making pipe holders for his father or plate racks for his mother.
6. Finally, the small sums spent in the above ways will keep many a boy from running wild, and when the time comes for making serious decisions he will thank the carpenter, toolmaker, mechanic, and gunsmith who helped to teach him the most important principles in the making of a scientist or craftsman.

If we compare the operators in our industrial organizations with the apprentices of medieval guilds, we would not find the lot of the former a very happy one, for our mechanized age is very exacting in its demands. He who serves a machine must be as automatic as the implement, and no less constant in the performance of his part of the labor, for it is all estimated on the basis of exact ratios—it is purely a question of figures and of producing parts. But for the more capable a remedy is at hand: not in legislation, nor in the labor unions, nor yet in the mere increase of wages, but in the wide diversity of craftsmanship that is rapidly springing up all about us since the Second World War, which insures freedom of occupation and happiness in work by multiplying the ways of earning a livelihood. It is not a new creation but a revival, and it promises to restore to ambitious young men a lost prestige.

Take the gunsmith who, in the days when the craft or trade was not a lost art, worked at his bench, filing his thoughts into the metal and his fancies into symmetrical forms; every task was a problem, every stroke of the file manifested skill; he was an inventor, a producer, a craftsman in the true sense. But machinery has supplanted all manual skill in this trade; the specialist now does little more than assemble the odds and ends; the master craftsman has now become a mere apprentice, for every article that formerly called for inventive skill in the making is now furnished by the manufacturer. The average gunsmith today is no longer a craftsman; he has become a mere jobber.

We have alluded to the trade of the gunsmith as a lost art, but it is reviving under the guise of a hobby, with the evidence of skill such as has not been apparent since the American Revolution. Restocked American military rifles may now be seen, here and there, amid the rubbish of re-stocked German and Japanese military arms, compelling one to pause and praise the skill of a revived craftsmanship that will surely tend to awaken a healthy ambition to excel. The cabinetmaker is coming to life again. He, like the gunsmith, got his materials ready-made from the mill; he could neither devise nor execute the simplest molding; he was literally a mere assembler, putting together materials already formed to a standard; and when completed, it was stained or varnished with the aid of a paint gun to give it either a polish or a dull appearance. As to invention or design, that is wholly gaged by mass production, which, as we have observed, operates on the mind as well as on the materials that come under its evil influences: thought, design, and product are alike mechanical, and therefore devoid of character. How effectively this has been accomplished may be seen in the unskilful work performed by the so-called craftsmen of the past fifty years, throughout all trades.

Taste dominates the emotions in craftsmanship, and reduces all to unity by means of harmony. In all its finer products design is the dominant influence, for good taste requires that every part shall be genuine. By educating the taste, a love for the genuine is encouraged; thus it becomes a matter of character and principle that everything shall frankly express what it really is, and the effect of striving for the attainment of the beautiful in all sorts of work tends to elevate the character of craftsmanship.

A mind formed by original observation and the study of facts will always secure attention for we seem to be brought in closer contact with truth and reality by its influence. The true scientist in his laboratory is continually occupied with things, and throughout his observations and experiment he is necessarily more or less involved with certain aspects of craftsmanship in constructing the necessary appliances for his investigations, often showing unusual ingenuity in devising the requisite aids and instruments, the hands and the senses continually working in harmony with thought and reflection. The employment of the senses in harmony with thought, and a more strict adherence to fact as a basis for theory, is the true safeguard against the wandering tendency of the human mind.

When it is recognized that there is equal dignity in all labor that engages the mind and hand in a common purpose, craftsmanship will recover its lost prestige and will be found, as in the past, a source of more contentment in many homes. The present revival of the home workshop, extending as it does to amateur gun craftsmanship, is also reaching into other fields and thus recruiting a great number of people into the skilled trades. Of course, it will naturally appeal to the more intelligent, capable, and skilful, for it is a matter of personal enterprise and individual qualifications. No mere words can transform an individual into an artisan, nor muscle into skill—an apprenticeship must be served to gain experience and achieve mastery.

It is a correct aim to seek happiness in work, to find some sort of occupation the reward of which is not completely gaged by monetary profit. But in order to find that happiness one must first find a hobby or a craft that is suited to one's temperament, and this is not discovered by aimless groping but by obeying the promptings of an early instinct. If there is a strong liking for firearms, fishing or hunting in early youth, a firm will and steady purpose will enable you to rise above all obstacles and stand upon your feet against all opposition.

Of talent it is hard to judge until the dormant capacities are brought to light; then it is as much a surprise to you as to your acquaintances. There must be occasion and opportunity to favor special aptitudes. Those who are successful usually began their hobby under the conditions in which they were placed by natural antecedents, aided by sound instinct and good judgment rather than by any so-called accident.

This may be verified by studying the construction of a firearm, which involves the crafts of machinist, toolmaker, diemaker, and woodworker; and, in the field of research, the engineer, designer, chemist, metallurgist, physicist, and ballistics expert. This should greatly interest the more than fifteen million gun users throughout the United States, among whom we may find a large number of artisans. Many of these men also have their own workshops and have shown great ability in constructing their own gun stocks for obsolete military arms as well as for factory models.

These worked-over military and factory productions which have been brought to my attention these last few years are worthy of the greatest praise, representing as they do the work of amateurs from every walk of life: businessmen, lawyers, teachers, physicians, dentists, clergymen, bankers, stockbrokers, accountants, right on down to the fellow who works on a farm. Many recognized their lack of foresight and experience and yet, in every case the effort showed signs of where, by a little experience with tools and much application, each could have developed into a skilful craftsman. A sustained trial will often reveal to a man that he is not nearly as helpless as he may suppose.

A shop of some sort has been the aim of the artistically inclined since the days of Homer and the ancient Greeks. Many of the old masters, as the museums show, devoted their talents not only to statues of marble and bronze, to fine paintings and silverware, but also to the production of finely engraved firearms. Benvenuto Cellini made a gun complete with lock, stock, and barrel; he also made his own gunpowder and cast his own bullets, stating that "I brought down pigeons at remarkable distances, around and about the city of Rome."

There are, of course, more critics than craftsmen in the world, proof of which may be seen in the clumsy restorations in a number of museums in the United States and Europe. We see this evidence in reproductions of delicate artwork and in the large collections of objects in wood and stone, of Indian pottery and relics, weapons, etc., which are supposed to be beyond repair when they might, with the proper knowledge, be easily restored. If one is in doubt one need only visit the "dead rooms" of a number of museums in the United States, where will be found abundant evidence to prove that, of all the crafts, that of restoring damaged or broken antiques is the least understood and the most strangely neglected.

But unfortunately such antiques do not exist ready to hand, they must be hunted down. As our experience increases so do our methods of seeking them improve. Every collector can find a fertile field in almost any shop that sells antiques, especially in the smaller and humbler kinds off the beaten track.

On the other hand, there is hardly a town so small in the United States where an enterprising craftsman could not create a very good business by repairing and restoring all kinds of antiques, from guns to watches. Of course, in the larger cities the demand for such work is much greater, for we find there many amateur collectors who will seek your services. But before you open your place of business you must first build up your ability and knowledge from craftsmanship gained by long experience. Such ability is easily acquired by those who are gifted with ingenuity, artistic temperament, or just common sense.

It is a great mistake to suppose that manufacturers are necessarily good repairers of what they produce. I have found, as many others, that even the large gun companies may not be safely trusted with the restoration of one of their own models. In

nine cases out of ten it is some humble gunsmith with a flair for antiques who will restore an obsolete model into a museum piece. This is true of most trades, for which reason I believe that a really accomplished craftsman, earnestly devoted to his calling, could make a very good living at this work. We can make every part of a gun or clock by machinery, but the machine cannot repair it when broken.

The fact is that almost everything people have been using for years can be made stronger, more simple, more beautiful by competent hands in a shop of your own. There is no reason why an antique dinner table cannot be fundamentally beautiful, or why a door on a corner cabinet cannot be repaired so that it swings at the touch of a hand. If you will learn to put screws in oak without splitting the wood, and provide accessories of your own creation, your craftsmanship will be wide demand.

As types of breakage and decay are numerous, so the art of restoring damage may be separated into various processes, such as joining, soldering, nailing, inserting, finishing, the use of clamps and of cements and adhesives. Glue or gum, when combined with powdered chalk or glass, make a cement, such as Portland cement, mortar, plaster of Paris, and putty—which last are often used by themselves to form objects and models.

So many formulas for adhesives are now available that the craftsman and practical mechanic can easily learn from experience which will give the best results in working with different materials in the course of his restoration efforts.

Apart from these strictly technical details, it is possible to develop gunsmithing so that it becomes a specialized activity of the highest value, as we have tried to show throughout this work. It is also possible to show how, in its various phases, craftsmanship becomes the first stage of elementary training in the arts to meet the higher skills requisite in any mechanical undertaking. So we see the attainment of balance by the alternation of different interests affecting the problems we encounter and select from day to day.

It is my own impression that if a boy at the age of games and sports does not learn to play baseball, to shoot, fish, or hunt, he will probably be sedentary to the end of his days, and even if the best opportunities be presented to him for acquiring a craft of some sort, it is a hundred to one that he will pass it up and shrink from the necessity of taking the first steps which, at an earlier age, might have filled him with a sense of delight.

However, let us see in what respect the trained and experienced mechanic differs from the novice or beginning amateur. First of all, we note that the raw sensations and drives of the non-mechanical disposition must be trained to make it possible for the individual to fabricate essential articles with the tools at his command and to serve their intended purpose. A glance at the modern manufacturing establishment shows that the functions of our senses have been taken over by a collection of extremely complex, intricate, and specialized machinery, contrived and constructed solely to turn out a given product at high speed and in the most economical manner.

Since the product manufactured in that establishment is, in the last analysis, dependent upon individual efforts, every discovery made by an individual in that factory has significance for the well-being of the organization as a whole. This gives the beginning craftsman, pondering over the problem of using his tools successfully in the quiet seclusion of his home workshop, the assurance that every genuine discovery will win the recognition of his family and friends far and wide, and in this feeling of the importance of our creative work lies our happiness. It usually compensates us fully for all the sacrifices which we have made in training our minds and hands to produce something useful that others can admire.

Of course, in each of us a saturation point is often reached in our home workshop, the impetus of our purely creative zeal expires, and unless the hobby be one associated with some urgent personal need that keeps our wits constantly whetted, we settle into a stalemate, and tinker from day to day on this, that, or the other, without adding anything significant to our store of knowledge or skill. Unfortunately, to such men—aside from their own business—the ideas gained by them before they were twenty-five are practically the only ideas they will have for the rest of their lives. They cannot create anything new. Disinterested curiosity fades, the mental grooves are set, the power of assimilation and creation wanes and dies. If by chance they ever do learn about some entirely new craft or hobby they are likely to be afflicted with a strange sense of helplessness and insecurity. But with craftsmanship learned in the impressionable days of instinctive curiosity we never quite lose our sense of being "at home" in our workshop or laboratory. There remains a kinship, a sentiment of close acquaintance with tools, instruments, and apparatus which, even though we have failed to keep abreast of the subject, flatters us with a sense of power through hard-won experience and makes us feel not altogether out of place in this world.

THE MODERN GUNSMITH

A Guide for the Amateur and Professional Gunsmith in the Design and Construction of Firearms, with Practical Suggestions for All Who Like Guns

By
JAMES VIRGIL HOWE
Formerly in Charge of the Small-Arms Experimental Division at the United States Frankford Arsenal; also Formerly of Griffin & Howe, Inc., of New York City

IN TWO VOLUMES

Revised Edition, With SUPPLEMENT Giving Latest Developments

Volume I

FUNK & WAGNALLS COMPANY
NEW YORK and LONDON

The attic workshop, where one spends many leisure hours

COPYRIGHT, 1934, 1937, AND 1941, BY
FUNK & WAGNALLS COMPANY
Printed in the United States of America
18

VOLUME I

Supplement

THE MODERN GUNSMITH

COPYRIGHT 1941, AND 1954

Copyright Under the Articles of the Copyright Convention
of the Pan-American Republics and the United States

DEDICATED TO

COLONEL TOWNSEND WHELEN,

TIRELESS WORKER, MASTER RIFLEMAN, AND HUNTER;

ABOVE ALL, A MAN AND A FRIEND

PREFACE

IT IS NOT without some misgiving that I venture on this, my first effort to write a book. In the first volume I have endeavored to keep in mind the enthusiastic but oftentimes struggling amateur gunsmith, and the book is offered as an attempt to make him independent of outside help. In its arrangement I have followed the method which at this time appears best suited to convey a clear idea of constructive forms of gun work.

The second volume aims to be a wider and deeper development of the material introduced in the first. It is my hope that it will lead the amateur into the theoretical and practical science of gunmaking, and be "a light to his path and a lamp to his feet" all the fascinating way.

The work as a whole is written in the hope, not that masters will arise from these teachings, but that latent skill will be aroused and self-reliance encouraged. It is almost certain that as time advances some of the drawings and formulas will be revised; but until then, I feel confident that they will be of the utmost service to the student. Undoubtedly, much will be found in these pages that is obvious to the more experienced mechanic, but if I have succeeded in lucidly conveying the first principles of gunmaking to the beginner, I shall feel satisfied.

The gun in all its forms is only an implement, but in its making it has become a highly specialized work of art, and few trades require such an extensive knowledge of mechanics. The gunmaker must also be not only a tool maker but an artizan who can adapt himself to almost any type of work. It is the ingenious man who will go farthest in this work, for it has unlimited possibilities; and as he advances to the problems of the second volume it will become more interesting.

It is with a feeling greatly resembling regret that I write the word "finis" to these volumes. Their creation has been an intriguing task, and has caused me to walk anew the beguiling path upward from my amateur days. And much remains unsaid, for it is impossible to corral all the vital information that has been gained in a lifetime of gunmaking, or to stop writing of a science which never has stood still and never will.

It would be impossible to explore a field so wide and diversified, even as insufficiently as I have done it, without the aid of knowledge and experience other than my own. I therefore take pleasure in acknowledging the valuable assistance rendered me by such well-known and authoritative sportsmen and technicians as Colonel Townsend Whelen, Mr. T. G. Samworth, Captain G. A. Woody, Mr. R. J. Kornbrath, and Mr. Austin G. Hale. And for their contribution of illustrations I am indebted to Dr. Dayton C. Miller, McGraw Hill Book Company, Westley Richards & Company, Ltd., the Lyman Gunsight Corporation, Parker Brothers, Waterbury Farrel Foundry Company, Remington Arms Company, the Cleveland Twist Drill Company, Hendey Machine Company, Pratt & Whitney Company. All these friends have been generous with their hard-acquired information, and we shall always be their debtors. In other days such "secrets of the craft" would have been jealously guarded by their discoverers. Today the greatest have not withheld their kindly hands.

Old Omar Khayyam has these lines in the Rubaiyat:

> I often wonder what the vintners buy,
> One-half so precious as the stuff they sell.

I feel the same way about gunmaking. What business is so fascinating as that which makes the things one loves, what clientele so appreciative and loyal as sportsmen at their happiest and best?

May I ask the reader's pardon for incompleteness, for oversights, for possible errors, and may I ask of him tenacity, perseverance and patient hard work, that this text-book may not have been written in vain?

JAMES VIRGIL HOWE

Cleveland, Ohio, June, 1934

CONTENTS — Volume I

CHAPTER PAGE

Introduction 3

I — The Workshop, Tools and General Equipment 9

The work bench—Necessary tool layout—Alchohol lamp—Angle plate—Anvil—Arbors—Arbor press—Bench stops—Bench grinders—Bench or surface plate—Bits—Bevel protractor—Calipers—Catalogs—Checkering tools—Chisels—Clamps—Countersinks—Dies—Spring dividers—Drill sets—Drill and wire gauges—Drill press—Sanding drum—Draw-knife—Electric soldering iron—Files—File card—File handles—Furnace—Gauges—Hammers—Indicators—Ladle—Lathe—Lathe dog—Mallet—Micrometers—Muzzle reamers—Magnifying glass—Miter box—Oilstones—Oil cans—Pans—Parallels—Plates—Planes—Polishing wheels—Tap wrenches—Pliers—Reamers—Saws—Scribers—Straight-edge—Scratch brush—Screw-drivers—Spring winding tool—Steel letters and figures—Scales—Weighing—Stools—Squares—Templets—Electric motor—V-blocks—Vise jaws—Welding outfit—Wrenches.

II — Special Home-made Tools and Equipment 29

The gunsmith—The trade of a gunsmith—Shotgun or rifle maker—Checkering stand and cradles in use—Checkering tools—Border tools—English type of tools—Motor grinder—Emery wheels—Fine circular wire wheels—Felt wheels—Woods for disc grinding—Chuck for motor grinder—Wooden laps—Wood chisels—Suggestions for making bottoming chisels—Forging and heat-treatment for chisels—Handles for wood chisels and ferrules—Importance of good screw-drivers—Auger screw-drivers used with brace—Suggestions for constructing screw-drivers—Hardening—Gun brace—Method of clamping brace—Rifle holder: Methods of making—Vise blocks—Hard wooden blocks—Copper vise jaws—Leather facing for vise jaws, lead jaws, etc.—Clamps, butt clamps—Importance of necessary tools.

III — Materials, Metals, and Supplies 41

Materials used by gunmaker—Catalogs—Precision in gun work—Tool steel, cold-drawn steel, drill rods, spring steel, steel tubing, steel spring wire—Machine screws and sizes—Brass, copper, lead, solder, soldering salts, emery cloth, sandpaper, fiber, glue, felt, buffalo horn, pumice powder, rottenstone powder, wood screws, acids, varnishes, rubbing oils, linseed oil, varnish removers, beeswax, ivory, charcoal, lacquers for metal, rouge or ferric oxid, Prussian blue, bone-black, water, woods, shellac, lacquer, gun oil, lard oil, sperm oil, etc.

IV — The Use of Tools 49

Wood-working tools—Chisels: their use and kinds in gun work; grinding of such tools; stoning for keen edges—Buffing wheel—Method of placing sharp run edges for cutting—The draw-knife and its uses—Planes: sharpening on the stone: adjusting the blade—Rasps: woods they are used on—Saws: sharpening of saws, instruction in their use, blades for saws, frames—The spoke-shave—Wood bits, cutter bits, the Forstner bit—Selection of brace—Drills and drilling: the twist drill, grinding of drills, drill gauges used in grinding drills, drills for glass, drill troubles, keeping drills sharp, lubricants used—Drilling heat-treated steel—Grinding drills for wood—The drill press, set-ups on drill press, method of cutting out inlays on drill press—Files: their importance in the trade of a gunsmith—Terms used for file—First steps in the use of a file—Grinding: speed of grinders, their uses, fixture attached to grinder for grinding tools—Grades and grains of grinding wheels—Selection of wheels for grinding, mount-

CHAPTER PAGE

ing grinding wheels—Laps and lapping: abrasives for lapping, charging caps, dry lapping, laps for flat surfaces, diamond laps, lapping chambers—Reamers and their uses—Screw-drivers and bits—Soldering fluxes—Taps and tapping—Lathe turning tools and tool grinding—Use of the alcohol lamp and Bunsen burner—Forge and anvil—Micrometer and its use—Oilstones: care of oilstones.

V — Reading and Making Drawings 69

What a mechanical drawing is—Views of drawings—Importance of having larger size —Prints—Technical lines—Finished lines—Instruments used in drawing—Paper—Thumb tacks—Drawing board—Pencils, erasers, triangles, ink, protractor, scales—Irregular curves—Title headings—Lettering.

VI — Safety With Firearms 77

Advice for high-velocity arms—Experimenting or changing actions—Fourteen safety rules—Obsolete arms—Makeshift firing pins—Fitting blocks to single-shot actions—Writing to powder companies for correct powder charges—Review of exploded arms —Safety in the use of muzzle-loading rifles—Oil and gun grease in the barrel and chamber—Obstructions in barrels—Shooting out obstructions—Head space—Threading barrels to actions.

VII — Selection of Woods 83

Species of walnut: English walnut, American black walnut—The reason for high prices of select wood—Seasoning the blanks—Selecting the stock blank—Selection of native woods—Weights of woods—Almond wood, Amboyan wood, apple, blackbean, blackwood, beech, birch, cherry, wild cherry, cocobola, curly ash, ebony, holly, mahogany, maple, myrtle, Queensland honeysuckle and African stinkwood, Osage orange, paduka, persimmon, plum, rosewood, satine—Walnut: European, African, American black walnut—Circassian walnut, East Indian walnut, English walnut, Italian walnut, Spanish walnut, Turkish walnut, yew wood—Securing wood in the log and freshly felled trees—Natural vs. artificial seasoning—Seasoning board and quarter-sawed planks—Planting walnut trees—Checkering of opened and closed grain woods—Use of templets in cutting blanks—Prices of blanks.

VIII — Designing the Gun Stock 101

Evolution of firearms—Problem of fit—Drop and recoil—Instructive arm pitch in stock design—Balance or center of gravity of an arm—Difference between metal and wood working—Forearm design—Close grips—Methods of estimating length of stocks —Target stock—Stock nomenclature—Stock design for women—Pitch—Cast-off, cast-on—Butt-stock design—Cheek piece—Comb design—Forearm design—Design of sides—Grip, hand and pistol—Single-shot action stocks—Shotgun stock design—Abnormally formed stocks—The trigger.

IX — Laying Out the Stock — Inletting the Action 123

Selecting the blank—The popular rifle—Inletting an action—Placing the magazine—Dimensions of a guard—Allowance for clearance—Laying out for the receiver—Use of lampblack—Position of projection—Pointed screws—Laying out holes—Use of centering device—Guard bushing—Use of mallet for impression—Chisels used in fitting—Use of templets—Inletting of a Krag receiver and trigger guard—Inletting a shotgun action—Removal of the mechanism—Use of the butt clamp—Cut-outs for the trigger guard—Inletting a Fox action—Inletting a side-lock shotgun—Fitting the forearm—Selection of wood—The first cuts to make—Inletting Lebel and Russian action—The Mannlicher Schœnauer, the Model 1917 Lee Enfield, Newton, Ross and Savage—Bolt-action rifles: Springfield and Mauser—Stocks held to action by bolts: methods of fitting—Automatic rifles and shotgun inletting—Fitting stock bolts—Re-

CHAPTER PAGE

lief at recoil shoulders—Use of glue in fitting—Forearm tips of buffalo horn, ivory, etc.; fitting of same—Defects in woods, what to avoid.

X — Modeling and Shaping the Stock **143**

Modeling and final shaping—Sight gauges for drop—First lay-out lines—Fitting the butt plate—Attaching the sights, sighting in the rifle for zero—Rubber recoil pad—Buffalo-horn butt plates—Trap butt plates—Plain shotgun stock—Repairs when a bit comes out at the side—The inlay—Roughing out—Position of stock in the vise—Use of the gun brace—Use of the plane, draw-knife and spoke-shave—The stock taking form—Undercuts for comb—Forming of cheek piece—Fitting of pistol-grip cap—Remedy for small imperfections—Buffalo-horn tip—Shotgun stocks—Monte Carlo effect—Side panels—Side-plate fitting—Finishing of stocks with sandpaper—Placing the stock in the checkering frame for sanding—Raising the grain—Sandpaper holder—Working curly maple with sanding drums—Making round forearms for Winchester and Remington type of forearms.

XI — Bedding Barrels and Actions **159**

Colonel Whelen's standard stock design—Bedding in the metal portions of the rifle—Light rifles and accuracy—Bedding as the deciding factor of accuracy—Methods used at the Springfield Armory—Wood surrounding tang of receiver and trigger guard—Flat under-surfaces of receiver—Bearing in the wood—Full stocked forearm.

XII — Giving the Stock Its Final Finish **165**

Experimental stages of the finish—Chemicals used in staining woods—Oil finishes—Importance of using wood filler—Use of rottenstone—Rubbing pad—Use of muslin wheel—Paste used for polishing buffalo horn—Luster on a stock—Formula No. 1 for finishing, Formula No. 2, Formula No. 4—The mixing of formulas—Formula No. 5, Formula No. 6, Formula No. 7—French polish—The rubbing pad—The spiriting-off process—Violin varnish finish—Stains and their uses—Acids—Formulas Nos. 8 and 9: stain for maple—Formula No. 10: stains for cherry—Lacquer finish—Removal of varnish—Buffing-wheel polish—Time required to complete an oil finish—Finishing a gun stock.

XIII — Checkering, Carving and Inlays **179**

Patience and concentration necessary to learn checkering—Checkering old stocks—Designs for pistol grip—Pattern laid out with lead pencil—Laying-out scale—Music wire and pins for forming master lines—Practise—The checkering cradle—Use of checkering tools—Instruction for beginning checkering—Guiding the tools—Checkering on forearms—Use of the bent needle file for finishing checkering at the pistol grip—Border designs—Instruction for placing borders—Matting and beading tools for borders—Designs—Checkering butt plate and pistol-grip cap—Matted surface in place of checkering—Carving—Carver's tools and oilstones—Inlays, shields and ovals—Inlays of fancy woods.

XIV — Stock Surgery **201**

Shaping the Springfield sporting stock—First steps in remodeling—The two reinforcing bolts—Fitting new butt plates—Raising the comb on service stocks—Attaching combs and pistol grips—Gluing inlays and insertions—The use of dowels—Marking off the drop and other lay-out lines—Working over the forearm—Mistakes of the amateur—The glued-on cheek piece—The inserted cheek piece—Refinishing ideas on patches and inserts—Removal of pistol grip on a shotgun—Reshaping forearms—Repairing broken stocks—Removal of dents—Use of gunmaker's shellac—Use of plastic wood.

CHAPTER PAGE

XV — Laminated Woods for Gun Stocks 213

Gluing pieces of woods together—Experimental samples—Strength in laminated pieces of woods—The warp of all woods—Structure of wood—Selection of stock blanks—End checkering—Coating the ends of blanks.

XVI — Modernizing Military Small Arms 219

Preference for bolt-action arms—Becoming a member of the National Rifle Association—How to remodel a military arm—Sight arrangements—Offhand shooting—Trigger pulls—The number of military arms to work on—Leaf-sight arrangement—The aperture sight fitted—Work on the Russian—Remodeling the Model 1917 or Enfield rifle—Converting the Mauser military model, the Ross, the Japanese Arisake Model 1905, the Lee Enfield caliber .303, the Model 1873 Springfield caliber .45-70—Making a muzzle-loading arm from the Model 1873 Springfield.

XVII — Fitting of Sighting Equipment 231

The telescope sight—Open sights—Aperture sights—Front sights—Factory sights—Firing the rifle to aline sights—The tang aperture sight—Sight arrangements on military arms—Selection of front sights—The aperture sight applied—Aperture sight extensions—Fitting sight bases—Table of tap sizes—Set-up for drilling bases—Drilling and tapping—Drilling hardened actions—Alinement of sights—Mounting cocking piece—Barrel sight bases—Front sight ramps—Telescope bases—Fitting telescope, side and top mounts—The hunting telescope—Reaming aperture discs—Fitting Lyman 48 sight.

XVIII — Replacement of Small Working Parts 255

The cause of friction—Determining tolerance—Finish on working parts—Patience and care in fitting—Lubricated surface—The lapping operation in fitting—Fitting the hinge bolt.

XIX — Hand-forging and Heat-treatment 261

Blacksmith's equipment—The forge—Air pressure—Fuels for the forge—Welding heat—Fluxes for welding—Hardening and tempering—Tempering knife blades—Tempering firing pins and extractors—Quenching baths—Oil heating baths—The potassium nitrate bath—The lead bath—To restore burnt steel—To anneal steel—To blue steel—To remove the blue color—Test for good steels—Case-hardening—Methods used in earlier times.

XX — Revolver and Pistol Repairs 271

Credit given manufacturers of hand guns—Pistol grips—Materials used to make grips—Sights—Sight adjustments—Changing and fitting barrels—Replacement of parts—Misfires—Checkering metal parts—Changing hammers—Loose screws—Altering revolvers—Reaming barrels for the use of shot—Relining revolver barrels—Single-shot pistols—General hints.

XXI — Problems of the Trigger Pull 293

The hard trigger pull—The plain trigger—The required trigger pull—The stoning operation—The target revolver—Study of mechanism by removing side plates—Automatic pistols—Bolt-action trigger pulls—Take-up, etc.—Set triggers—Shotgun triggers—Use of snap caps—Sear—Troubles of shotgun and single triggers—Speeding up lock time—Problem of lock time and trigger pulls.

XXII — Amateur Etching and Engraving 307

Copying objects on tracing paper—Tools for etching—Scrapers—Burnishers—Acids or mordants—Labeling bottles—Trays—Ammonia—Stopping-out varnishes—Matting tools—Border tools—Damaskeening—Engraved receivers.

CHAPTER PAGE

XV — Laminated Woods for Gun Stocks 213

Gluing pieces of woods together—Experimental samples—Strength in laminated pieces of woods—The warp of all woods—Structure of wood—Selection of stock blanks—End checkering—Coating the ends of blanks.

XVI — Modernizing Military Small Arms 219

Preference for bolt-action arms—Becoming a member of the National Rifle Association—How to remodel a military arm—Sight arrangements—Offhand shooting—Trigger pulls—The number of military arms to work on—Leaf-sight arrangement—The aperture sight fitted—Work on the Russian—Remodeling the Model 1917 or Enfield rifle—Converting the Mauser military model, the Ross, the Japanese Arisake Model 1905, the Lee Enfield caliber .303, the Model 1873 Springfield caliber .45-70—Making a muzzle-loading arm from the Model 1873 Springfield.

XVII — Fitting of Sighting Equipment 231

The telescope sight—Open sights—Aperture sights—Front sights—Factory sights—Firing the rifle to aline sights—The tang aperture sight—Sight arrangements on military arms—Selection of front sights—The aperture sight applied—Aperture sight extensions—Fitting sight bases—Table of tap sizes—Set-up for drilling bases—Drilling and tapping—Drilling hardened actions—Alinement of sights—Mounting cocking piece—Barrel sight bases—Front sight ramps—Telescope bases—Fitting telescope, side and top mounts—The hunting telescope—Reaming aperture discs—Fitting Lyman 48 sight.

XVIII — Replacement of Small Working Parts 255

The cause of friction—Determining tolerance—Finish on working parts—Patience and care in fitting—Lubricated surface—The lapping operation in fitting—Fitting the hinge bolt.

XIX — Hand-forging and Heat-treatment 261

Blacksmith's equipment—The forge—Air pressure—Fuels for the forge—Welding heat—Fluxes for welding—Hardening and tempering—Tempering knife blades—Tempering firing pins and extractors—Quenching baths—Oil heating baths—The potassium nitrate bath—The lead bath—To restore burnt steel—To anneal steel—To blue steel—To remove the blue color—Test for good steels—Case-hardening—Methods used in earlier times.

XX — Revolver and Pistol Repairs 271

Credit given manufacturers of hand guns—Pistol grips—Materials used to make grips—Sights—Sight adjustments—Changing and fitting barrels—Replacement of parts—Misfires—Checkering metal parts—Changing hammers—Loose screws—Altering revolvers—Reaming barrels for the use of shot—Relining revolver barrels—Single-shot pistols—General hints.

XXI — Problems of the Trigger Pull 293

The hard trigger pull—The plain trigger—The required trigger pull—The stoning operation—The target revolver—Study of mechanism by removing side plates—Automatic pistols—Bolt-action trigger pulls—Take-up, etc.—Set triggers—Shotgun triggers—Use of snap caps—Sear—Troubles of shotgun and single triggers—Speeding up lock time—Problem of lock time and trigger pulls.

XXII — Amateur Etching and Engraving 307

Copying objects on tracing paper—Tools for etching—Scrapers—Burnishers—Acids or mordants—Labeling bottles—Trays—Ammonia—Stopping-out varnishes—Matting tools—Border tools—Damaskeening—Engraved receivers.

CHAPTER PAGE

XXIII — Stripping Actions, Oiling and Minor Repairs 323

Bolt-action rifles—Polishing parts—Stoning parts—To dismount the bolt—To assemble the bolt—The shotgun—Oiling arms—Handling parts—Assembling and disassembling single triggers—Use of the spring vise.

XXIV — Minor Repairs and Adjustments 333

The use of a gun—Skilfully removing a worn muzzle—Lapping a muzzle—Poor ignition—Alteration on single-shot actions—Alteration on Martini action—Springfield bolt stop, screw positions—Attaching temporary sights for sighting in.

XXV — Miscellaneous Formulas and Methods 341

Gunmaker's shellac—Gun oil—Means of water-proofing outdoor garments—Miscellaneous lubricants—Fixed oils and fats—Brown or thickened oil—Rosin oil—Soap and grease lubricants—Adulterants—Testing oils—Powder solvent—Metal-fouling solution—Mercury—Sulfur casts—Patterns—Glue for patterns—Shrinkage draft for patterns—Allowance for finish—Glue—Gunmaker's glue—Shellac varnish—Steaming woods for bending—Loose wood screws—Testing iron and steel—Home-made drill press—Where colors come from—Useful information.

XXVI — Soldering, Brazing and Welding 355

Soldering—The fluxes—Soldering liquids—Soft solders—Hard soldering and brazing sweating—Fluxes for soldering—Alloys for brazing solders—Silver solder—Autogenous welding—Directions in the use of a welding outfit—Oxy-acetylene torch—Adjusting the torch: size tips to use—Preheating welding steel—Welding brass—Cutting metals with oxidizing flame—Operating the cutting torch—High and low pressure torches.

XXVII — Field Repair Kits and Devices 367

Planning the repair kit—Repairs to broken stocks—Action or top-lever breaks—Dents in shotgun barrels—Repairs to bolt-action rifles—Sights—Obstructions in barrels.

XXVIII — Experimental Factors Governing Small-arms Ammunition 375

The cartridge case—Primer pockets—Automatic arms—The rifle and accuracy—Factors in rifle shooting—Standard telescope sight—Factory layout—Bullet experimental factors—Designs of the future.

XXIX — Mechanical Definitions and Phrases 411

Glossary complied to assist in the understanding of shop terms used by gunmakers, past and present.

Directory 419

Index — See end of Volume II.

ILLUSTRATIONS — Volume I

FIGURE		PAGE
	The attic workship, where one spends many leisure hours	*Frontispiece*
1.	Tool maker's angle plate	10
2.	Wood bit for brace—intended for wood only	11
3.	Checkering tool designs	12
4.	Milling cutters for making checkering tools	12
5.	Wood gouges—easily made from drill rod	13
6.	Fluted countersink	14
7.	Half countersink	14
8.	Drill set in number sizes	15
9.	Drill set in fractional sizes	15
10.	Drill gauges in number and fractional sizes	15
11.	Avery tool-room drill press	16
12.	Barrel-muzzle reamer	18
13.	Magnifying glass and holder	18
14.	Shapes of oilstones	19
15.	Dowel-pin plate	19
16.	Taper-pin reamers, straight and spiral fluted	21
17.	Machine reamer	21
18.	Expanding reamer	21
19.	Counterbore	22
20.	Straight-edge for checking pitch of rifles and shotguns	22
21.	Types of screw-drivers used in gun work	23
22.	Bench-vise blocks commonly used in the gun shop	26
23.	Bench or stand for checkering cradle	29
24.	Checkering cradle for the amateur's construction	30
25.	Improved checkering cradle for the amateur	31
26.	Checkering cradle most generally used in the gun shop	32
27.	A portable bench grinder is indispensable	32
28.	Bottoming tools	34
29.	Bench gun brace and scoring tool	35
30.	Rifle holder for testing purposes	36
31.	Home-made tool holder for bench grinder	37
32.	Correctly ground lips	52
33.	Special grinding for hard metal or brass	53
34.	Glass drill	53
35.	An indication of too great speed	53
36.	(a) Thinning the web of a drill. (b) Showing where the emery wheel has removed the metal	54
37.	Correct lip clearance	54
38.	Incorrectly ground lips	54
39.	Another case of incorrectly ground lips	55
40.	The correctly ground drill	55
41.	A rough, inaccurate hole—result of a dull drill	55
42.	Internal lap, arbors, and driving pin	58
43.	External lap holder	58
44.	Cast-iron lapping plate	59
45.	Bench burners and equipment for tempering small parts	64
46.	Illustrating different views of an object in mechanical engineering	70
47.	A Springfield rifle that blew up	77
48.	Shotgun stock blanks, furnished by Mitchell Bosley	84
49.	Rifle stock blanks, furnished by Mitchell Bosley	85
50.	Caliber 6.5 mm. Steyr action, made by Rigby	86
51.	Light caliber 30-06 Springfield designed by Dr. George Quay	87
52.	William Ford 20-gauge double	88
53.	Savage caliber 25-3000 bolt-action rifle, restocked with bird's-eye maple	89
54.	Restocked Krag rifle	90

FIGURE PAGE
55. Model 1898 Springfield remodeled ... 90
56. Model 1903 Springfield rifle, remodeled into sporting type ... 91
57. Caliber .22 made on a Martini action ... 92
58. Francotte 12-gauge double shotgun ... 92
59. A Charles Daley three-barreled gun ... 93
60. Joseph Lang 12-gauge trap gun restocked with fine Italian walnut ... 94
61 Stock patterns, or templets, cut from ¼-inch wood ... 96
62. Francotte 12-gauge trap gun stocked for the shooter's holding comfort ... 102
63. Restocked caliber 30-06 Newton rifle designed for persons who have lost the use of certain fingers ... 103
64. Target stock design used with aperture sights ... 104
65. Caliber .22 match rifle, single-shot Winchester action ... 105
66. Layout for sporting rifle stocks ... 107
67. Layout details for average shotgun stock measurements ... 108
68. Butt plate and pistol-grip templets ... 109
69. End view of a Monte Carlo stock, and special cheek piece ... 110
70. Under side of a well formed and graceful cheek piece ... 110
71. Forearm designs for rifles and shotguns ... 112
72. Rifle and shotgun stock designs ... 114
73. Offset rib used for monocular vision ... 118
74. Springfield receiver with locating screws in position ... 123
75. How a Springfield receiver is ground at tang for more graceful outlines when restocking ... 124
76. Springfield guard templet for laying-out purposes ... 125
77. Sporting stock layouts for Springfield Model 1903 rifle ... 127
78. Centering device used on drill press to aline screw holes when fitting actions into stocks ... 128
79. Bench work. Fitting stock to an action ... 137
80. Suggestions for the application of forearm tips to sporting arms ... 139
81. Brace countersink ... 146
82. Types of butt plates used on rifles and shotguns ... 148
83. Sanding drum for use on bench grinder ... 155
84. Whelen design of cheek-piece and stock measurements ... 159
85. Rubbing pad for polishing a finished stock ... 167
86. Beautiful example of the gun maker's art—by V. Chr. Schilling ... 175
87. Simple checkering designs ... 180
88. Pistol-grip designs ... 181
89. Forearm checkering designs ... 182
90. Laying out a checkering design ... 183
91. Forearm checkering designs for single-shot rifles ... 185
92. Design suggestions for carving or checkering stocks ... 187
93. Beading punch for border designs, etc. ... 188
94. Julia Thornely checkering the pistol grip of a finished stock ... 189
95. Design suggestions for checkering butt plates and pistol-grip caps ... 191
96. Design suggestions for carving gun stocks ... 193
97. Caliber-.22 "Hornet" rifle made by Westley Richards ... 194
98. Typical methods of cutting out patches for insertions in wood ... 195
99. Design suggestions for inlays in gun stocks ... 196
100. Layout for inlay insertions in military service stocks ... 202
101. Model 1896 Krag rifle worked over by Dr. M. D. Stepp ... 205
102. The applied cheek piece ... 206
103. Insertion of cheek piece ... 206
104. Parker 12-gauge shotgun ... 207
105. Lamination of wood for gun stocks ... 214
106. Correct way to saw gun-stock planks from log ... 215
107. Incorrect way to saw gun-stock planks from log ... 216
108. Caliber 350-2 Rigby double-barreled rifle ... 219
109. An amateur's gun shop. Dr. E. J. Witzel in a corner of his basement ... 223
110. An amateur's first attempt at remodeling a military rifle ... 224
111. Muzzle-loading shotgun, 20 gauge, made from a caliber-45 Model 1873 Springfield ... 226
112. The famous Lyman 48 aperture sight for Winchester Model 54 rifles ... 232
113. Lyman globe target front sight showing the nine interchangeable insertions ... 223
114. The Lyman 48 sight adapted to the Model 19 and 23 Savage rifles ... 223
115. Lyman 103 micrometer tang sight. Click adjustments for windage and elevation ... 235

FIGURE PAGE
116. Illustrating how leaf-sight bases are applied to sporting arms ... 238
117. Special extensions for aperture sights ... 239
118. Lyman 103 sight mounted on the end of a Springfield .30-03 bolt sleeve ... 242
119. Drilling jig for placing telescope blocks on rifle barrels ... 245
120. Rifle bore sighting instrument ... 249
121. Springfield Model 1903 rifle designed for Mr. Charles G. King ... 250
122. Remodeled Springfield rifle, Model 1903, with complete sight equipment ... 251
123. Hand fitting operation on small parts as performed in the large arms plants ... 256
124. Preparation of metal for welding purposes ... 263
125. The old peace-maker that brought law and order to our early frontier. The Colt single-action revolver ... 272
126. Plates and finger grip used on target revolvers for better holding ... 274
127. Tools for removing and screwing in revolver barrels ... 277
128. Colt caliber .22 automatic. A very efficient weapon for the woodsman ... 280
129. Springfield striker or firing pin ... 280
130. Caliber .22 Hornet made on a Remington caliber .50 revolver action ... 286
131. Firing mechanism of Springfield Model 1903 rifle ... 297
132. Set-trigger mechanism as used in the German Mauser sporting rifles ... 299
133. Beautiful examples of the steel engraver's art ... 308
134. Relief engraving showing cloud effect in background ... 309
135. Essential tools and equipment for the amateur: suggested scroll designs ... 311
136. Leaf effect, to be etched in steel ... 312
137. Ballard action engraved in high relief ... 314
138. Ornamental screw heads ... 315
139. Matting tools. Damaskeen lap for frosted effect on steel or other metals ... 315
140. Fine examples of etching or engraving to work from ... 317
141. Shotgun action engraved in high relief ... 319
142. Firing-pin impressions left on caliber .22 cartridge cases ... 334
143. Primer flashes showing how propellent is ignited ... 335
144. Types of firing pins ... 336
145. Eccentric lever pin—Pope design ... 336
146. Home-made steam box ... 349
147. Home-made drill press ... 350
148. Fixture for brazing ramps, sight bases, swivel bases, etc. ... 359
148a. Field vise. A very effective means of holding parts in an emergency ... 370
149. View of a caliber .30 boat-tailed bullet in flight ... 376
150. Rim-cartridge case ... 377
151. Rimless cartridge case ... 377
152. Semi-rimless—a questionable design ... 377
153. Belted cartridge case ... 377
154. Chamber pressures of lubricated and dry ammunition ... 379
155. Cartridge-loading machine. ... 387
156. Double-action press, capable of producing 20,000 cartridge cups per hour ... 388
157. First and second operation draw press, friction dial feed, for rifle cartridge cases ... 388
158. Hopper-feed cartridge-case draw press ... 389
159. Cartridge-case pocketing and heading machine ... 390
160. Cartridge-case vent-punching and pocket-resizing machine ... 390
161. Cartridge-case head-turning machine ... 391
162. Cartridge-case annealing machine ... 391
163. Cartridge-case tapering machine ... 392
164. Machine for gauging and weighing the assembled cartridge ... 393
165. Double-action press, used to form the cup, the start of a bullet jacket ... 395
166. Caliber .30 flat-base bullet in flight ... 396
167. Caliber .375 and .404 bullets ... 397
168. Bullet-jacket draw press, for second, third, and fourth redraws ... 398
169. Automatic-feed, bullet-jacket trimming machine ... 401
170. Slug-forming machine, employed to form the lead cores in jacketed bullets ... 403
171. Bullet-assembling press ... 405

INTRODUCTION

Purely for the Amateur

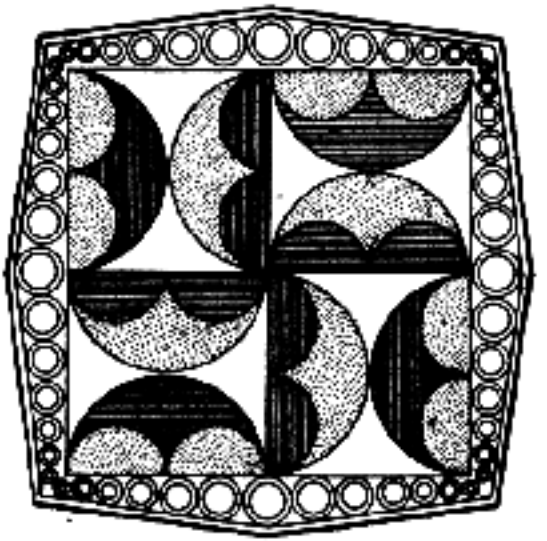

The Modern Gunsmith

INTRODUCTION

Purely for the Amateur

MY OBJECT in writing this book is to bring the enthralling business of gunsmithing into the life and down to the abilities of the every-day gun lover who has a mechanical mind and an aptitude in the use of tools. I hope to lead him step by step to attainments worthy of a professional mechanic, and eventually to a place where he will be able to do all the things necessary in the production of a complete arm. With this in view, I shall devote this introduction purely to the amateur who knows little about gun making, but who has the desire and the ambition to learn and to achieve. I believe that the best place to make a start is in renovation. Tearing down an old gun, removing the rust and dirt of years, and replacing each part, gives one a direct knowledge of its components, their uses and functions, that a study of drawings can never impart.

Spending leisure time on an old muzzle-loading rifle of the early period gives a start in creative work, and when carried out scientifically is profitable in many ways, keeping both mind and body active. The instinct to create is resistless; as children, with unskilled fingers, we patiently try to build with toys the concepts of our fertile imaginations; still with determination we continue, even tho failure is repeated many times. As men, most of us still have that instinct to build, tho many lose it in later years through lack of the right environment. We have learned that direct teaching in childhood furnishes the best foundation for our hobbies in later life; exclusive of bridge and golf—two national pastimes frowned upon by those with creative ability—such instruction is too often lacking in thoroughness.

How strange to be born without the desire to direct one's hands by the mind to create an object or bring a worn article back to its original condition! Renovation, as a start; beginning with an old piece of furniture, if no better object can be found. Do not harbor the impression that a hobby must be creative, or inventive, or must be a benefit to home, office, or mankind. Most of us are just poor weak creatures, improving on the ideas of various other individuals. From a humble start something materializes—tho it may benefit only yourself—by giving peace of mind and body.

Living in large cities, in apartment houses, and having rapid, easy transportation, as well as stores that sell or procure for the customer everything from toothpicks to ready-made cottages, the modern youth has entered a state of decadence that his forefathers would have looked upon with outspoken condemnation. The object of one's desires is handed to him without the slightest effort on his part—complete, and even delivered. Wants that sixty years ago would have meant labor and self-denial, are now supplied without turning one's hand; and the result is a regrettable decline in knowledge of the simplest tools. This may mean more to the human race than one would care to acknowledge, for the best definition of man is that he is "the tool-using animal." In the large cities today it is very rare to encounter a person who can use the simple hand tools. Where this loss of skill finds its saddest expression is in the management of our hobbies. The one thing in life with an appeal strong enough to lend encouragement in the battle of existence is missing; unoccupied time becomes poisonous and injurious to home and happiness. Hobbies have saved many men by keeping them sane. If you do not already have one, find one for yourself and ride it—whether it be firearms or something quite different. Many may not be capable of even thinking up an adventure and pursuing it in their present environment; but there is a wide range to choose from—collecting minerals, jewelry, pipes, books, old money, antiques, stamps, china, glass, etchings, art, etc. This list could be lengthened and still one could find some other thing that would serve to keep him sane. If nothing else appeals to your taste, why not become a collector of arms with historical interest for the den decorations?

Lack of mechanical knowledge, in most cases, is due to not being willing to learn. The familiar excuse, "I'm too old to take up a hobby," can no longer be accepted. Be what you may; a trial

directed seriously along mechanical lines will reveal that you are not nearly so helpless as you supposed. Many a man—and woman, too—has an unsuspected aptitude for tools. An old muzzle-loading rifle may look hopeless to the layman, but to the lover of tools it offers the possibility of spending many hours of enjoyable labor in its renovation.

In the eastern part of the United States one can often find these old arms in unexpected places. They lurk in old attics and can be purchased on very reasonable terms, considering their value from the viewpoint of the collector. Many can be secured in antique shops, while others can be purchased from individuals in whose families they have been for many years; handed down from generation to generation. Often interesting history will accompany the weapon. Securing one is in itself enough to inspire you to lay plans for its complete renovation. The older the arm the more the barrel is rusted and worn. Parts have been made by the former owners or by local gunsmiths. The stock may be broken or rotten in places; broken stocks often require the making of new ones, but in any case the repairs to the old ones are likely to tax one's ingenuity. New pieces of wood can often be set in, matching the old wood so well that it is hard to detect where the repairs were made. All the metal parts and brass furniture will need polishing. (The term "furniture" is used for the trigger guard, patch box, butt plate, etc.) The wood screws will need to be renewed; likewise the keeper pins, and iron screws.

As all guns are merely mechanisms for exploding a charge and directing a bullet, you will be surprized how constant these functions are and how little change has taken place in centuries. The names, even of the important parts of gun mechanisms, have persisted from the days of the flint-lock to our own times. So if you, Mr. Beginner, have carefully noted the function and uses of all the parts you have dissected in Grandad's old squirrel-gun, you have gone a long way into the science of gunmaking and will recognize the similarity, even in the differences, when you examine the vitals of the modern breech-loader.

If Grandad's old gun is available, let us start on that. Almost surely it will not be quite complete; some parts will be missing or worn. Let us see what you can do. First, strip it down by removing the barrel from the stock. You will find that it is secured at two places: a cross-bolt transversely through the fore-end and either a hook engaging in the false breech, or as is more common, a screw running downward through the tail or tang of the breech-plug into the stock. Place the barrel in a vise, using clamps of lead, copper, or felt-lined jaws to prevent marring the barrel by the hardened jaws of the vise, and with a large wrench, unscrew the breech plug. You may have to soak the barrel end in kerosene before you can move the plug, and in some cases heat will have to be applied by means of a gasoline blow-torch. With the plug removed, you will have complete access to the bore, and will be able to see its condition and to go intelligently about its scoring. With the barrel work completed, you will remove the lock and "furniture" by unscrewing the side plate, and this will have your next attention. If you decide to dismount the lock, you will have to devise a little gadget to compress and hold the mainspring in tension in removing and replacing it. Only the furniture will not be attached to the stock.

Perhaps you have a 25-20 single-shot Winchester rifle having a worn muzzle, poor sights, a trigger pull that needs stoning, an action that needs polishing, and a stock and forearm that are not just right. If you have not discovered these defects beforehand, you will in actual shooting on the range, where they will be revealed in the target you produce.

Let us suppose that the groups are all in a twelve-inch circle at one hundred yards. You know that you can hold a little better than this, so the first trouble you will look for is a badly worn muzzle. If this should be the case, cut off from one-half to one inch with a hack-saw and file the muzzle square, using a small try-square having a thin knife-edge blade. File so that you cannot see any light under the blade, or as close as possible to square, by checking from all four points on the end of barrel. With a 60-degree countersink, just break the edges of the rifling. When this is finished, proceed to lap the barrel as described in Chapter XVIII, Volume II.

If the rifle is not equipped with a marine-type front sight, make one the same height as the old sight, but about .09 inch wide. Now take it out to the range again and fire for groups. You will be surprized to see how the groups have been reduced, for nine times out of ten this operation will bring new life back into even some of the old muzzle-loaders that look from the muzzle as tho they had a hexagon bore.

After you have breathed this new life into the rifle, so to speak, you will find that you have released a hidden spring in yourself. You will realize that if it only took a hack-saw, a file, and a lapping rod to improve an old, neglected barrel, then raising the comb or making a new forearm will do infinitely more. Place the sling swivels in a better position and you begin to find that results are

obtained of which you never dreamed you were capable.

It will be well to overcome the desire to create the work of an artist and be content to face the problems of apprenticeship. Start by practising on the mortising of a piece of metal into a piece of wood. It does not matter what you pick up in the form of a metal piece, but try to fit it in so that there will be no openings around the metal. If you are successful, try anything that has an odd shape or form and work that until you become so accustomed to using the tools that you have complete confidence in yourself. Square pieces of wood with a plane and use the checkering tools on sample pieces of walnut.

Wood work, I think, requires an almost innate skill, especially in the building of a stock. Study the methods not only of men familiar with the particular problems of gun work, but also those of cabinet makers, pattern makers, and musical-instrument makers, for you can learn some things from all of these trades. Naturally, wood work is easier for most of us than metal work, for wood work requires artistic ability, instinct, and forethought, while metal work requires a sound knowledge of its own particular science.

At first, file out your checkering tools from umbrella staves. Bend the staves and file fine teeth in them, just as in a checkering tool (one of these is only a double saw), and this will give you an idea of keeping lines straight. Make up a matting tool also, to see the type of design it will produce on wood. Just take a piece of $\frac{3}{16}$, $\frac{1}{4}$, or $\frac{9}{32}$ square steel, and cut it off three or four inches in length. File fine teeth or points on the end with a small needle-slitting file. It will not be necessary to harden this temporary tool. Try it on a piece of wood by tapping it lightly with a small hammer to see the effects brought out on the wood.

As I look back upon my own start, I remember well the experiences I had. I bought no tools except a small vise for which I paid two dollars. The bench was constructed of light boards, and had a rocking-chair motion when I tried to do any work on it. My wood chisels were made from $\frac{1}{8}'' \times \frac{5}{16}''$ drill rod. These were as bad as the bench and the vise; yet I fitted a Springfield action into a walnut blank with them. With a rasp and a bastard file, I shaped up the outside, sanded the stock, oiled it, and checkered it with a checkering tool made from the same drill rod.

After my first experience, I realized my requirements, and began to spend some money for equipment—a substantial bench, a good swivel vise, chisels, brace and bits, planes, good screw-drivers, files and rasps, spoke-shaves—and made up special tools that I discovered were needed and unobtainable. From then on things were better organized, but as I recall those days, I cannot help wishing that I had been able to turn to the pages of a book such as this.

We all make a good many mistakes in the beginning. Even today I make some that cost me a lot of time and money to repair. Do not try to rush your work, for in gunmaking this cannot be done. Gunsmithing, while it is a trade in itself, is really made up of a number of specialized branches, such as tool making, die making, cabinet making, and instrument making. You must specialize in all of these, but in changing from one to another, mistakes will creep in now and then.

Before taking a firearm apart, study its construction, and through simple reasoning, figure out why the manufacturer made it in that particular way. There is a reason for every screw placed in a mechanical device. Many automatic pistols come to my shop after they have been taken apart, and occasionally when I receive such arms they are beyond all hope of repair. When the beginner is in doubt, he should consult someone who knows, for it does not pay to blunder ahead without thinking what the various parts are for. But once you have gained a good understanding of the principles of the firearms of different makes, you soon develop an almost instinctive knowledge of all the mechanical arrangements of the actions and will not hesitate to dismantle any firearm for the first time. Remember each and every part you remove, and put it down in a consecutive position on the work bench, so that the mechanism may be put together as it came apart.

One of the most important things in this field is a clear understanding of firearms and the reloading of ammunitions, not only of the firearms you own, but of others as well. Read the books dealing with these problems from the pens of such authors as Whelen, Crossman, Mattern, Greener, etc.; and also reference guides such as the machinery handbooks and texts by Fred H. Corbin and Frank A. Stanley. Such books as these deal with shop practise and the general principles of mechanics. It will be well to start a library not only of books, but catalogs as well, for these contain a wonderful amount of valuable information. Write for those on the list which the Directory contains, and you will find that they offer a course of study which in time becomes indispensable. The tool catalog is especially valuable, for there you will find tools that answer for other purposes than gun work. Nearly all the large hardware houses circulate catalogs, but it is doubtful if they would forward one of these to an individual without any business con-

nection. So, for the average person, it is best to secure both Sears, Roebuck and Montgomery Ward catalogs, as these contain almost all the tools and supplies the beginner will need.

I have spent a number of years in gun and ammunition work and have gained experience, not only from the standpoint of a small gunsmith's shop, but from a number of years spent in one of the U. S. Government's largest arsenals and other fine institutions where it was possible to acquire a world of knowledge in mechanics. I am passing this information to the reader without concealing any trade secrets. Some subjects could be treated in separate books, but as long as the reader is able to grasp the principles with a clear understanding of the reasons behind various instructions, he will develop his initiative to a point where he can accomplish great progress in the construction and repair of firearms. Finally, be sure your ideas are practical and not theoretical, for you will spend long hours proving these ideas. This is satisfactory providing it does not run into too much expense, for by doing it, ultimately you will have gained experience proving your theories; and when the results do not prove satisfactory, just charge it up to experience.

CHAPTER I

The Workshop, Tools, and General Equipment

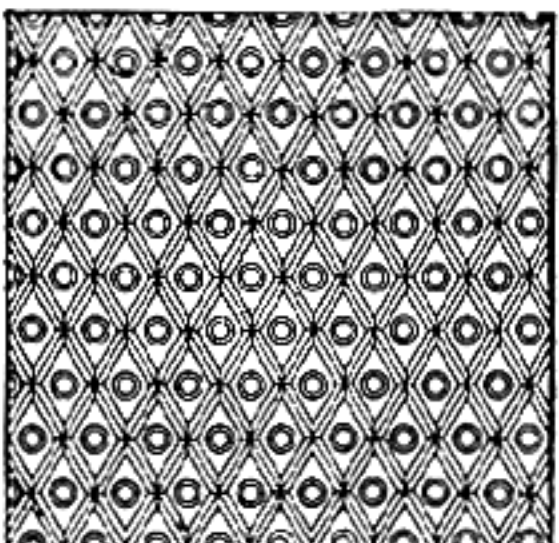

CHAPTER I

The Workshop, Tools, and General Equipment

INASMUCH as it is essential that the mind be free from trouble and distraction in order to produce one's best work, the workshop should be located in such a place as will allow concentration. A space should be set aside, if possible, that will be in every respect best fitted for this particular type of work. The difficulty of using the average basement as a workshop is the lack of proper, natural light, an essential element in close work. The shop would be far better were it placed in a well-lighted spare room, perhaps in the attic; or, better still, there may be a space in the yard to erect a simple shed or make an addition to the garage. If one is lucky enough to have a suitable out-building, this is easily converted into a convenient shop. The important qualities are that it be heated and ventilated, that the natural light be good, and that it be roomy enough to contain all the necessary tools, fixtures, and supplies.

As your ideas and mistakes are best developed on paper, it will be well to secure a drafting board, and to place it in a corner of your workshop together with a T-square, 45 and 60 degree triangles, a finely graduated rule, and an inexpensive set of drawing instruments. There you can make a record of all your ideas, and in time you will be able to do any work you want to do with this equipment and the mental picture before you.

The Workbench — This can be made in various ways. You can obtain factory-made, pressed-steel bench legs and build up a top of any size, adding elaborate details if you are so inclined. However, I should advise the beginner to test his skill by making his own bench in its entirety. You can get the necessary 4 x 4 yellow-pine studding, such as carpenters use for house framing, for the legs, making each end frame with two uprights and one crosspiece on top, and a lighter one fastened about 10 inches from the floor. A board can be fastened lengthwise between the frames, and this makes a handy rack to store scrap wood or metal parts. The crosspieces can be fitted into the uprights so that they make a neat joint and can be held together with ⅜-inch carriage bolts.

For the top, either get a two-inch plank of yellow pine or some hardwood such as beech or maple. If you wish to go into the construction more elaborately you can make your top of 1-inch yellow pine, and cover it with maple flooring laid crosswise. This makes a very good hardwood top and will last forever. Yellow pine, altho cheaper, soaks up oil and is never as satisfactory as harder woods. The suitable size for a bench is between 34 and 36 inches in height from the floor to the top of the bench, according to one's stature, and about 24 inches in width. Rubber placed under each leg will greatly soften noise. Drawers should be built and partitioned and attached to the under side of the top. These will hold the tools and files that are not generally in use. A suitable rack at the back should also be built to hold other necessary tools, such as chisels, bits, etc.

The length of the bench can be governed by the available space, but by all means make it long enough, for you will find that much more space is necessary for all your work than you realized. In fact, if the reader has intentions of larger development, it would be best to build two benches, one for his wood work, and one for his metal work, as these two types of work require different attachments, such as vises, etc.

A good bench is absolutely necessary, and you will find that there is no substitute. The kitchen table is useless, for it is important that everything be solid and fastened securely. I do not recommend the purchase of wood working-benches such as are listed in hardware catalogs, for I would impress upon the beginner's mind the importance of gaining the experience step by step, which is done by making everything possible one's self.

Necessary Tool Layout — Here is a necessary tool layout, given in alphabetical order, with a description of each tool. This is to give one a general idea of his tool requirements. Separate chapters will deal with their use:

Alcohol Lamp—A lamp of this kind can be made easily. A gum mucilage bottle has even been used. A .30 caliber cartridge case can be cut off and a section of this inserted for the tube. An oil can may also be used by cutting off a part of the tapered spout and inserting a wick. The bottom of a cartridge case will serve as a cover. This will

make the most serviceable of lamps. Of course the appearance will not be the best or to the taste of a good mechanic, who has pride in his tools, but it will answer the purpose.

The uses of the alcohol lamp are varied; with it you will be able to heat all small parts for hardening and bluing, and it will also serve for drawing the temper of small tools, etc.

Angle Plate—This is a most useful fixture for clamping parts in laying out work. The most convenient size is one 3 inches in height by 2½ inches in width. Angle plates can be purchased from hardware or machinery dealers. The best of plates can be made by an advanced student. Figure 1 illustrates an angle plate. It is best to mill the V-grooves vertically and horizontally and to drill and tap for clamps. Then make suitable clamps for fastening the work by means of these V-grooves. One will find that a plate of this nature plays a large part in the layout of new work and in the necessary set-ups to check measurements. It is also useful for clamping work that must be perfectly square. An angle plate of cast iron is the most satisfactory.

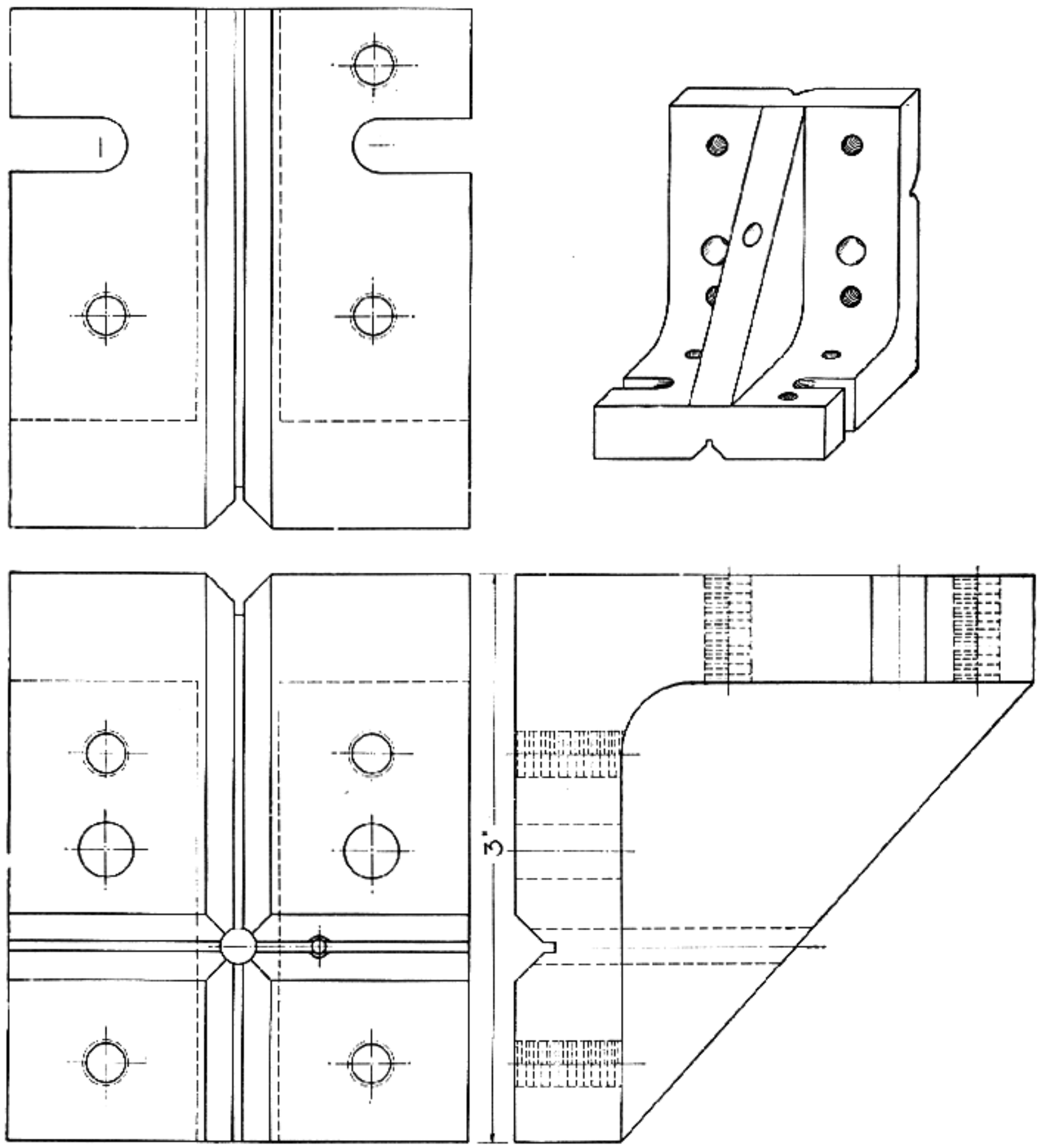

Fig. 1
Tool maker's angle plate

Anvil—An anvil weighing between 40 and 80 pounds is one of the most useful appliances in the heat-treating or blacksmithing department. It will be used to forge springs, to make special hammers, etc. A universal bench anvil will also prove very useful in the shop.

Arbors—When one's equipment includes a lathe, these can be made as required.

Arbor Press—A No. 1½ or No. 2 Greener arbor press can be used for broaching, punching, piercing, straightening, pressing in pins and bushings, resizing cartridge cases and bullets, etc.

Bench Stops—These are for the woodworking bench and come in handy for holding work in place while planing. Several of these may be placed in line along the top of the bench, and you will find many uses for them.

Bench Grinders—The best bench grinder is the electrically driven Apex ¼-horse-power grinder, which has ½-inch shafts and takes two grinding wheels. By removing one of the grinding wheels, various disks for cleaning, surfacing, polishing, and countless other operations may be substituted. Hardwood disks, preferably of maple or beech, about 9 inches in diameter and 1 inch thick, are adaptable to a variety of uses. These must run absolutely true to prevent vibration. By gluing sandpaper on the faces of these wheels they can be used for truing the faces of materials such as buffalo horn, ivory, bakelite, and fiber work. It is well to have six or eight of these wheels with sandpaper of different degrees of fineness glued to them. As they wear out, they are easily replaced. With #2 sandpaper attached you can rough down rubber recoil pads, and for finishing you can use a wheel covered with #0 or #00 sandpaper. With the latter you will get a very fine finish free from scratches. On ivory, bakelite, fiber, and similar materials, it is best to experiment with different grades of paper to determine which will produce the best results. This grinder will take the circular wire wheels, felt wheels, muslin, canton flannel, woolen, chamois, buckskin, leather, and sheepskin-covered wheels which will be used in the polishing of steel parts.

Bench or Surface Plate—A plate 14 x 14 x 1½ inches is essential for laying out different things, or for forming up ordinary parts of sheet metal, and when necessary, it is something you can pound on instead of using the bench top. Another plate, of heavy glass, 12 to 16 inches wide and 40 inches long, is a great convenience. This should be placed on a stand that is perfectly level and can be used for a laying-out plate in mounting telescope blocks, for squaring between any filed or machine sections of barrels or action work, for laying out stocks to secure the proper lines of drop and cast-off, and for laying out sight bases and other parts. Such a large surface plate of metal is expensive, but a true glass plate will answer the purposes very well and cost much less.

Bits—Three types of boring bits are necessary in the general layout: auger, Forstner, and center. The auger bits are not expensive, and it will pay to invest in a high-grade set, graduated between ¼ and 1 inch by sixteenths. Forstner bits are very useful in gun work. Unlike auger bits they have no spur in the center, but are guided by a sharp outer rim or cutting edge which makes a hole with a smooth level bottom. These are the most convenient bits to use for cutting out recesses for locks in shotguns and wherever a flatbottomed hole is required. These bits are often incorrectly referred to as "Foster bits." The center bit is short and is used in gun work only for starting the hole so that the Forstner bit can be exactly located.

If much work is to be done, it is best to get all three sets of bits. The principal use for boring bits is roughing out wood in the magazine mortises, boring out recesses under a trap butt plate, and a number of similar uses in different kinds of wood work. One or two expansion bits, while not altogether necessary in gun work, are good additions. Figure 2 shows a wood bit to be used in a brace.

Fig. 2
Wood bit for brace—intended for wood only

Braces—Pick out the most dependable for use in connection with auger bits. It should always be a ratchet brace. A Yankee hand drill with a set of small bits is also included under this head, as it is one of the most serviceable hand drills for drilling small holes. It is also an aid for drilling in awkward places.

Bevel Protractor—This is used for laying out angles on both wood and metal and also for checking unknown angles.

Bunsen Burner—This, as well as the alcohol lamp, is very useful for heating or tempering small parts, as a very high temperature can be obtained. It is inexpensive, and if gas connections are available is a great convenience.

Calipers—A set of both inside and outside calipers, 2, 4, and 6 inches, will be needed. These are handy for making quick measurements and to calculate the diameters of work throughout the operations. One 4-inch hermaphrodite caliper is all that is necessary. This is for drawing lines from the sides of a surface to a given measurement, and is a very useful caliper.

Catalogs—See Directory.

Checkering Tools—These tools are very useful, not only to place designs on forearms and pistol grips, but for other designs as well. Imagine a saw, or rather two small saws, about 1 inch long, at

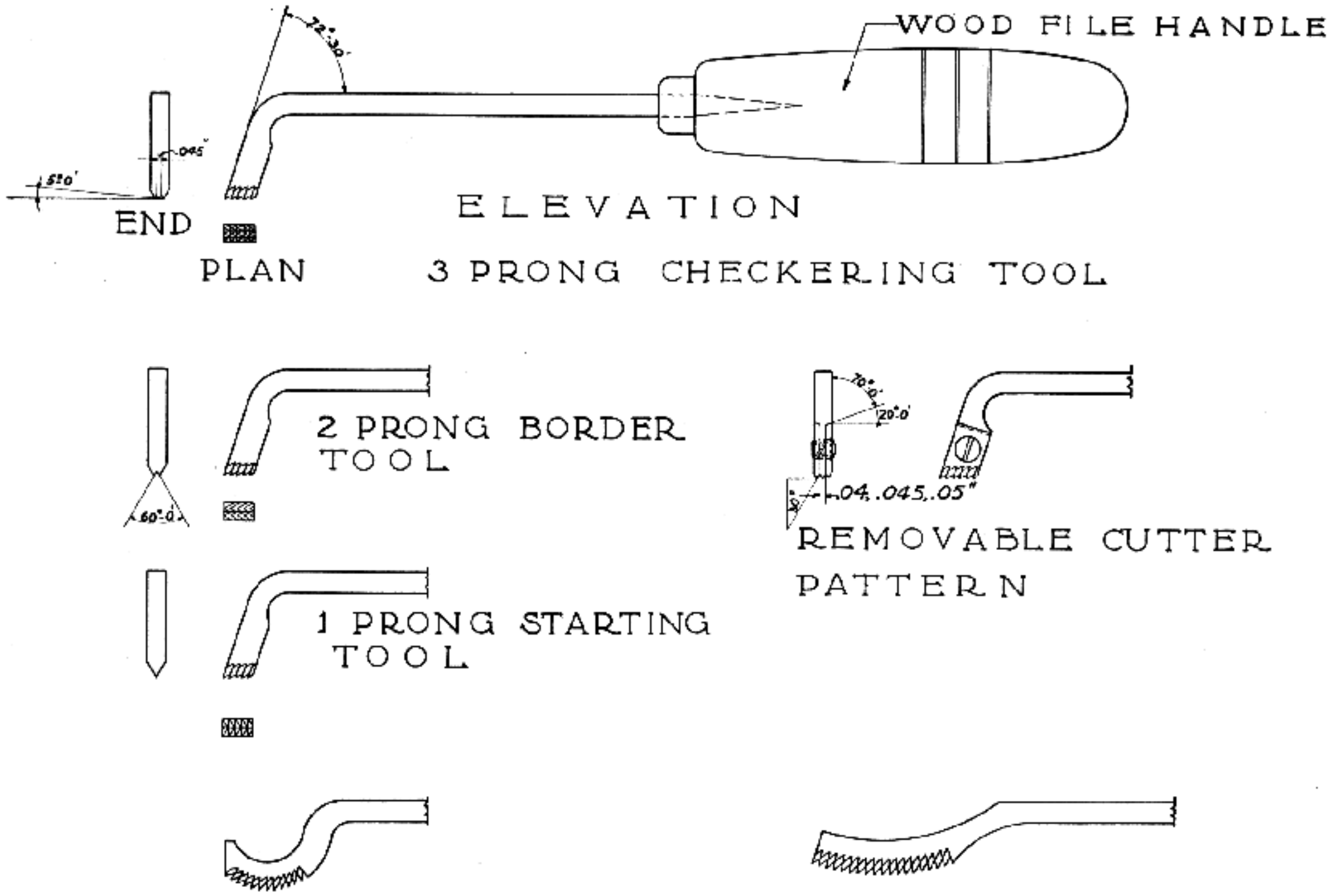

Fig. 3
Checkering tool designs

the end of a straight piece of steel shank looking like a small tooth-brush. Figure 3 illustrates checkering tools. The double saw can be made by filing it as one thick saw; then cutting a groove lengthwise to make two rows of teeth. In using it, one side of the teeth first forms the groove, and afterwards forms the guide, while the other side makes the next cut. As each first cut is finished another mark is being made. This insures equal width of cut. A set of checkering tools consists of the bordering tool, laying-out tool, and two checkering tools for each size of checkers. From point to point of the teeth there should be a distance of .04 and .045. These tools are made from ⅛ x ¼ drill rod, cutting the rod in 6-inch lengths, heating the end to cherry red and forging the end about 1 inch long at an angle of about 75 degrees.

It will be good practise for the student to undertake filing out his checkering tools, using a three-square needle file and measuring from point to point. For fine checkering (25 lines to an inch) they should measure, point to point, .04 inch wide. The best tools are made with three rows of teeth. While one is cutting, the other is guiding into the groove which has been made previously. The three-row tool is the hardest one to make, for it is necessary to get accurate measurements. The tools shown in Figure 4 are for milling the cutting teeth

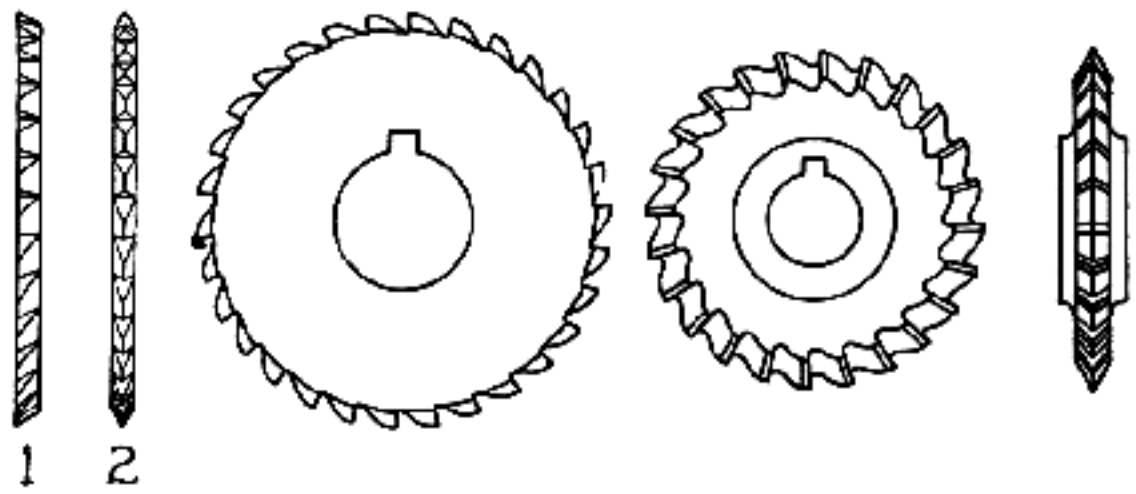

Fig. 4
Milling cutters for making checkering tools

accurately; placing them .040, .045, .050, .055, and .060 apart. The .045 tool gives the best results and makes the best checkering possible on a stock.

After the grooves are cut in the checkering tools lengthwise, it is easy to file out the cutting teeth. To do it more accurately, have them milled out and spaced as finely as possible; then file the sides or cutting edges on an angle, sloping well back; the sharp cutting edge on the outside does all the work.

The teeth may be made almost vertical, or they may slope back slightly as outlined. You can stone these for the different woods you are using, for degree of sharpness is important. After cutting the teeth on both sides, heat the cutter to a bright cherry red and quench in water, polish off with emery cloth, and draw the temper to a light straw color. This leaves it hard and impossible to touch with a file.

If you wish to cut your own checkering tools with a three-square needle file, lay them out, using the die-maker's square to get the first line and estimating over the distance that you wish to space it. Say that you wish to space it .045; this is easy, as these scales are graduated in sixty-fourths, so it is only necessary to set over on the second line to $\frac{3}{64}$, only .001 over the .045, which is near enough. It is very essential that you be careful in filing these spaces to get them the proper width, for if you try to doctor them up by filing the sides of the cutter, you change the height—one will be high and the other low, and you will have difficulty in checkering.

If you do not get just what you wish at first, start over again and get the width that you desire. Circassian, French, and Italian walnuts are the easiest woods to checker, and the checkering on them can be made much finer than on open-grained American walnut or softer woods. Eighteen to twenty spaces to the inch is customary in using the .050 or .055 tool. The laying-out tool is seldom used, as you can lay out your work much better with the three-square bent needle file.

The angle of the checkering tools should be 30 degrees on the side or 60 degrees on the included angle. These angles are the same as the three-square needle files. The border tool may vary according to the width that is pleasing to the eye. The finest checkering does not require a border, for a border is only carried around the checkering to cover mistakes, such as the slipping of the checkering tool and the three-square needle file. It is well, however, to have the beginner use the border tool until he becomes so adept that never a mark will be made outside the outlines of the checkering. The end which is driven into the file handle can be drawn to a taper so that it may be more tightly secured. The length of the tool from ferrule to point should be between 3 and 4 inches, and from the bend to the checkering teeth, three-quarters of an inch.

The bent file is made from a die-maker's escapement file, or a $5\frac{1}{2}$-inch three-square needle file, #0 or #00 cut. To bend the files at the end, coat with a mixture of bone-black made into a paste by adding oil. Heat to a cherry red and bend on a hardwood block using a slight steady pressure. Coat again with bone-black, reheat to a cherry red, and dip into a brine solution made by adding common table salt to water. This requires very quick work, for the point is so small that it loses heat rapidly, so everything should be handy—the fire, the wooden block and the brine solution—for as soon as you dip the file into the solution, the bone-black comes off and the file serrations are at once clean. The bone-black, of course, is only used to prevent the heat from burning the points of the teeth.

Chisels—These come under the heading of firmer chisels, socket chisels, bottoming tools, gouges, cold chisels, and carving tools.

(a) Firmer chisels: The ordinary carpenters' chisels are too long and clumsy for gun-stocking, but those made for wood carvers are very suitable, especially the short ones made for work in technical schools.

(b) Socket chisels: These are a very short pattern of carpenters' chisels and are useful in the rougher operations. You can buy an assortment of them from any hardware company. You will need a set from $\frac{1}{8}$ up to $1\frac{1}{4}$ inch. You also require a set of offset pattern-maker's gouges from $\frac{1}{4}$ to $\frac{3}{4}$ inch, varying in widths by $\frac{1}{8}$ inch.

(c) Gouges: You may have to undertake the making of your own gouges, as suitable inside-ground gouges are not available. These are made from drill rods $\frac{1}{8}$, $\frac{3}{16}$, $\frac{1}{4}$, $\frac{5}{16}$, $\frac{3}{8}$, $\frac{7}{16}$, $\frac{1}{2}$ inches. The most convenient length is 4 inches from the file handle. File down the drill rod to a taper one-half its diameter on the end used for cutting;

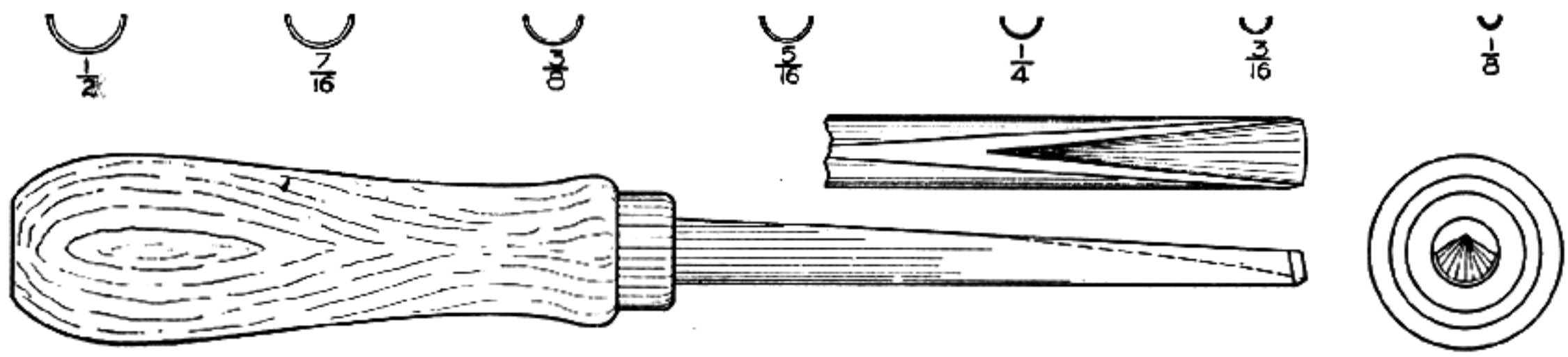

Fig. 5
Wood gouges—easily made from drill rod

then file out the radius of the cutting edge to the proper size and harden and temper in the usual way. Of course it will be necessary to turn the other end down to a lesser diameter in order to drive into convenient-sized file handles. When these tools are made and held to a sharp cutting edge, you will find them very handy on inletting work where small as well as large radii need to be cut very sharp. Figure 5 illustrates these.

(d) Carving tools: The very best carving chisels and gouges are those made by F. V. Addis and Sons of London. They are made from fine Sheffield steel, forged entirely by hand and sold in this country by Hemmacker & Schlemmer and Company in New York City. You will find a number of uses for carving tools, and it is well to invest in a set of these, not only for the different carving work you may want to do, but also for odd forms that may arise in the construction of special woodwork.

(e) Bottoming tools: These must be hand-made, as the ordinary chisels and carving tools will not reach the deep cuts required in the inletting of shotgun actions. Bottoming tools can be made from ¼ x 3/16 inch drill rods and forged and filed to the shape required in any particular job. It is necessary to head and forge out the ends, so be very particular to keep your heat even and do not attempt to forge the steel when it starts to lose its color; hold it at a cherry red as long as you are working it. After forging, file it to the desired shape, harden, and drew the temper to a purple. The edges may then be sharpened with an oilstone. File down the shanks and fit suitable file handles. You will find as you progress that you will never have enough bottoming tools.

(f) Cold chisels: Buy only a few of the small sizes; these are very seldom used in gun work, but you will find a use for very small ones. Save all your needle files, and by using the ends that are held in the hand, you can make fine chisels. They will hold their edges very well if the temper is drawn to a light blue.

The wood chisel is one of the most important tools a gunsmith owns, so without the finest of chisels he is absolutely helpless. The ordinary carpenters' chisels can be used by the beginner to get an idea of what is required, but for the fine inletting of actions into stocks such chisels are really useless, and good work can never be done with these tools. Always bear in mind that they must be held at a keen razor edge so that they will cut the grain any way it may run.

Clamps—These are used for the purpose of attaching horn, glued wooden insets, ebony, ivory forearm tips; for holding down work on the drill press, for clamping discs to circular wheels on the grinder, and a considerable variety of other uses.

(a) C-clamps: There are a variety of C-clamps made, but the most useful is the malleable iron body-builder's C-clamp which comes in openings from 3 to 10 inches. It is essential for the beginner to secure a set of these clamps with openings of 4, 6, and 10 inches. They are very reasonable in price, and while buying it is well to get the set. You can also buy the small cast-iron clamps in the five and ten cent store. These come in handy for a number of things. Even tho they are made of cast iron they serve their purpose very well on small work. There are a number of odd forms of clamps you must construct yourself as you find uses for them.

(b) Stearn's improved bar clamp: This is one of the handiest clamps of its kind, and comes in various lengths. A five-foot clamp is very convenient for a number of jobs, and can be bought so reasonably that it does not pay to make it. You can get the shorter clamps of the Stearn's variety for all the work in the gunshop.

(c) Butt clamp: As every gunsmith knows, this is a very handy clamp and worth making up. It is used largely in stocking shotguns and single-shot rifles. The end pieces are ½ x 1 x 6-inch cold drawn steel, with 7/16 holes drilled 4 or 5 inches apart. On these are placed two long ⅜ bolts, threaded on each end, and long enough to reach from the action to the butt of the stock blank. Care must be taken in tightening the nut on the opposite end so that equal pressure will be applied. It is important to equalize and tighten the two nuts at the same time. Figure 22 illustrates one of these clamps.

(d) Wooden hand-screws: These are very handy for holding sections that are glued to stocks, also for holding forearms in place; in fact they have a number of uses on woodwork where metal clamps cannot be used.

(e) Tool-maker's parallel clamps: It is well to secure sets of these clamps, for they will be much used in metal work, such as holding in place telescope and sight bases of all kinds and descriptions, and also for clamping work to face plates, angle plates, and lathe-face plates.

Fig. 6
Fluted countersink

Fig. 7
Half countersink

Countersinks—These are made in various angles —45, 60, and 82 degrees, and are used for countersinking metal and wood. Figures 6 and 7 illustrate two standards used.

Dies—The beginner should secure round button dies of the following sizes, together with a suitable die stock. It is wise to get sets made up in these small convenient sizes:

2-64	6-48	10-30	¼-28
2-56	6-32	10-24	
3-56	7-36	12-28	
3-48	7-32	12-24	
4-48	8-36	7/32-32	
4-36	8-32	¼-20	
5-40	10-32	¼-24	

One set put out by the Pratt and Whitney Company ranges from 1/16 to ¼ inch in sixty-fourths. This set includes the corresponding taps. A full set will be found expedient.

Spring Dividers—A set of three tool-maker's roundleg dividers in 2, 4, and 6 inch sizes for laying out work is necessary.

Drill Sets (Twist)—Drills come in different sizes and are classified as number drills, letter drills, and fractional drills. It is well to buy a full set of them to begin with. Number drills come in sets from 1 to 80; letter drills come in sets from A to Z; and the fractional-size drills come from 1/16 to ½ inch in sixty-fourths. If you intend to do much work, the sets of high-speed drills are best. After finding what drills you use most, secure one or two extra ones of this number, letter, or fractional size, so that if one is broken your work will not be delayed. Figures 8 and 9 illustrate fractional and number sets.

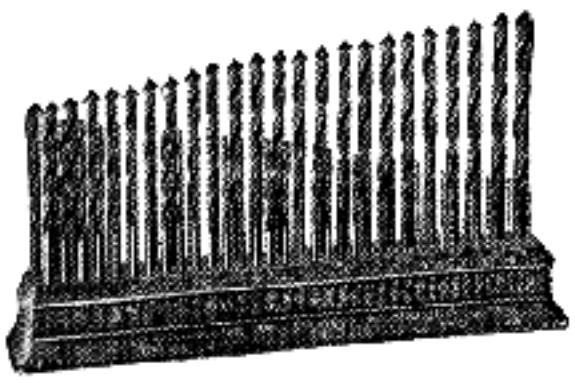

Fig. 8
Drill set in number sizes

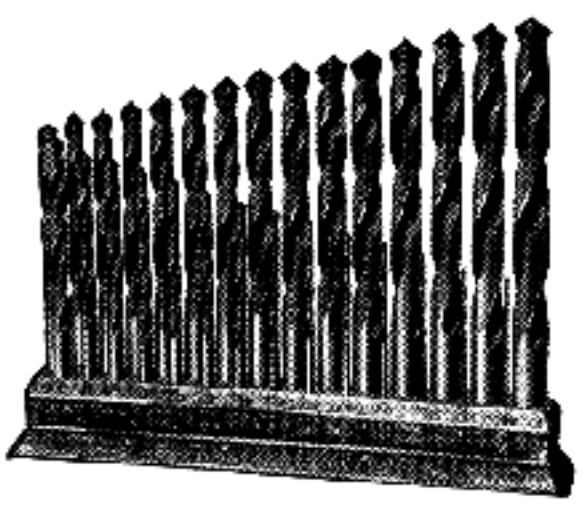

Fig. 9
Drill set in fractional sizes

Drill and Wire Gauge—Starrett's #185 gauge is a necessary tool, as you will refer to this more than any other outside of your micrometer. Also get a fractional-size chart and the letter-size chart. All these come in handy for checking the diameters of round stock, and also for measurement when turning work in the lathe. Figure 10 shows fractional and number drill gauges.

Drill Press—This is one of the machines that an amateur really requires, not only for drilling holes, but for rotating work when filing screw heads, polishing round pieces of steel, or damaskeening steel such as is seen in fine watches. Damaskeening is discussed in Chapter XXII. A drill press can be converted into a mortising machine by putting suitable stops in the proper locations and can even be used for facing wood by using end-mills where it would otherwise be impossible to get two faces absolutely parallel to each other. A drill press can also be used as a milling machine when you wish to file out small cutters or make slots in sight bases, shotgun hammers, tumblers, etc. It is also useful in places where it would be difficult to do work in any other manner, such as milling out stock for odd inserts of bone, ivory, ebony, and buffalo horn.

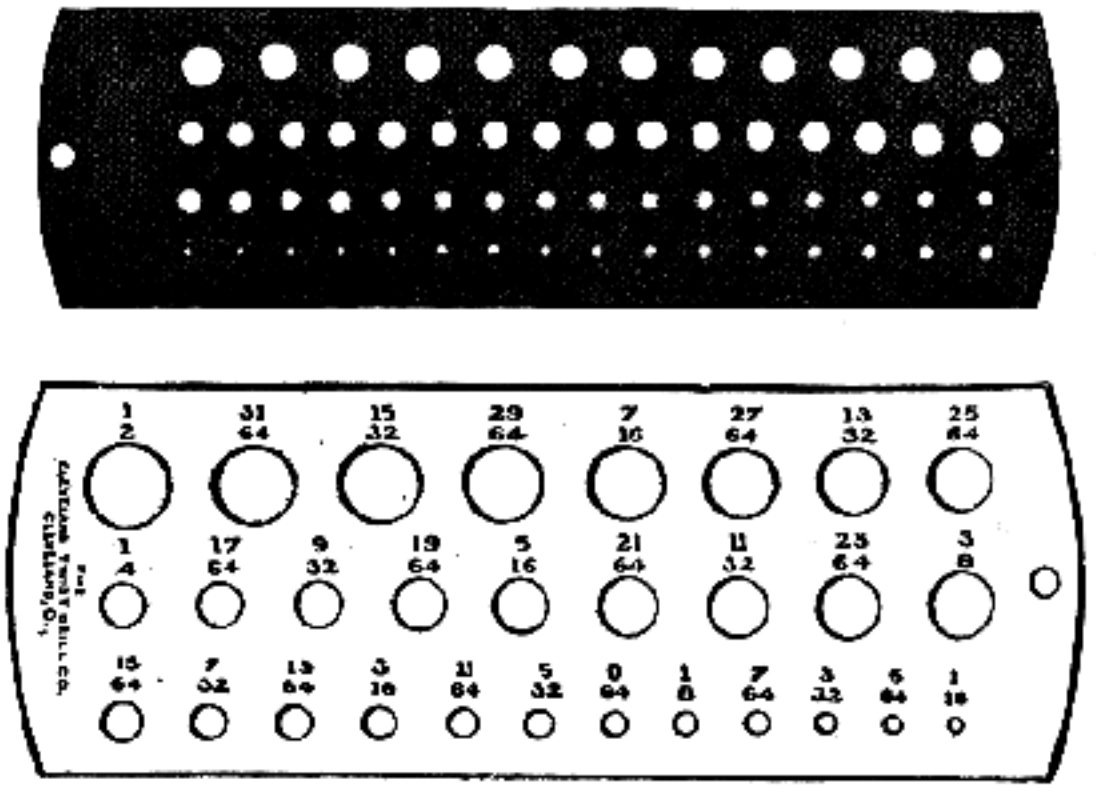

Fig. 10
Drill gauges in number and fractional sizes

One of the best drill presses for gunmakers on the market today is the Canedy-Otto, a motor-driven sensitive drill press, with two separate tables. The upper one can be swung out of the way and the bottom table used for work of larger size where a similar center is required. The centers are furnished with this machine. The spindle has a #2 Morris taper and is also adapted to the use of a #3 Jacobs' Drill Chuck. It will be best for the gunsmith to save up his funds and invest in such a machine if he intends to carry his work to a high degree of perfection. Figure 11 illustrates the Avery Drill Press.

Delta Sanding Drums—These are made by the Delta Supply Company and can be used on the spindles of the electric Apex grinders mentioned before. They can be used for polishing convex and concave surfaces and for the removal of old varnish, dirt, or rust. The sandpaper on these drums can be changed very quickly as it is attached mechanically.

Draw Knife—The draw knife is not an essential tool in the gunsmith's list, but if one is adept in its use it can be employed to good advantage in the rough-shaping of a stock.

Electric Glue-Heater or Glue-Pot—The Liberty

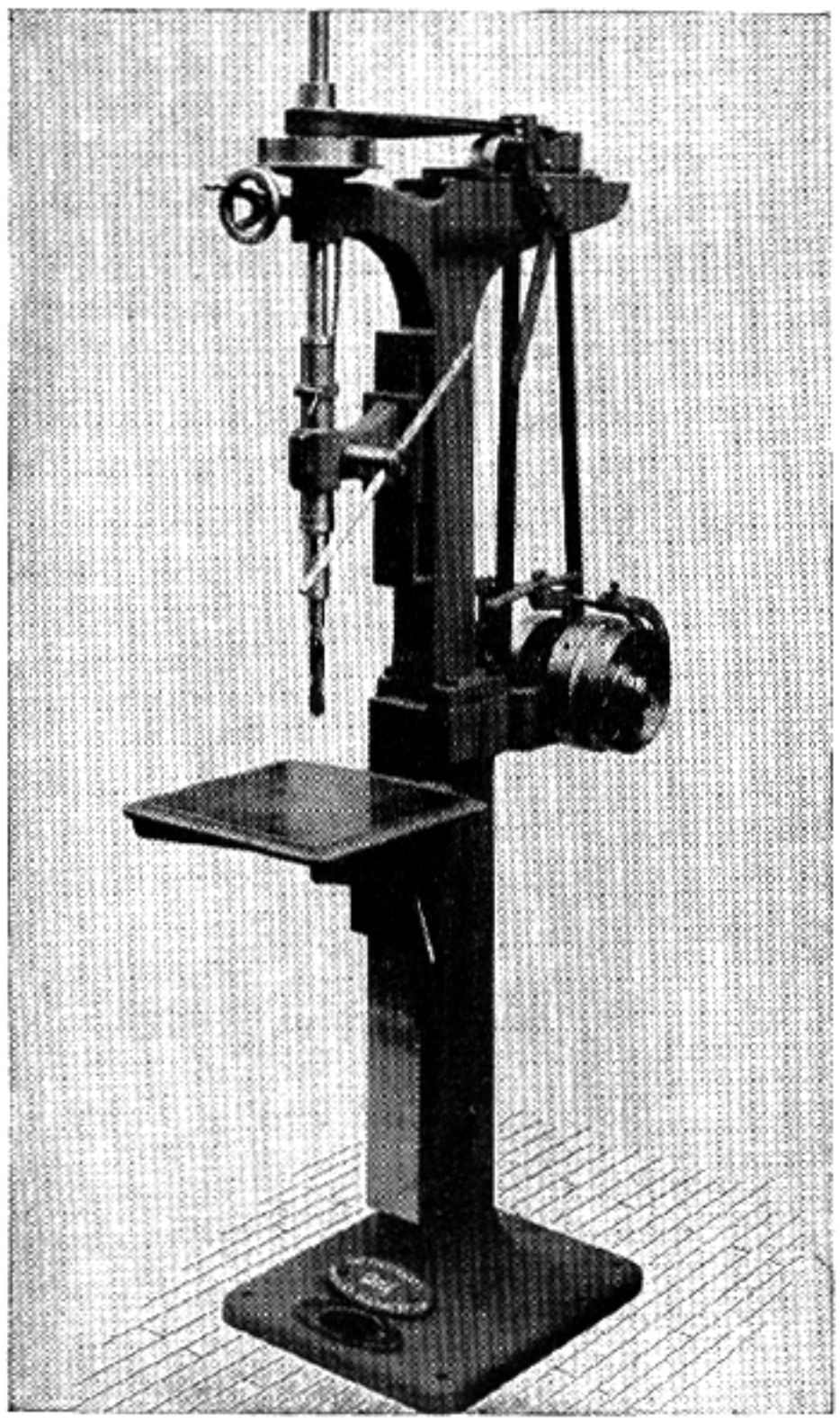

Fig. 11
Avery tool-room drill press: An essential machine in gun shop, machine shop, or laboratory

Electrical Company of Indianapolis puts out one of the best glue-pots manufactured today, one which is operated on the same principle as the fireless cooker. The pint size is the most convenient for the small shop. If you do not have an electrical connection, the regular cast-iron glue-pot will answer the purpose very well.

Electric Soldering Iron—This is a great convenience, but the ordinary soldering iron will answer the purpose just as well. An iron of this type is not used very often in the shop, as most parts are sweated, but if one intends to do much work, it is well to have one on hand.

Files—A real mechanic takes great pride in his files, gives them the best of care, and when they are worn out, converts them into scrapers, chisels, or any number of other useful articles. I would not advise you to make your own files. It is a difficult proposition calling for considerable experience, and I do not believe the results would compensate for the effort, inasmuch as ready-made files can be bought so reasonably. However, if you do need one other than the standard line, all that is necessary is to grind a blank to the desired shape. The experienced file maker holds a chisel at the correct angle and strikes a blow with the proper hammer, raising a burr. The chisel is then rested against the burr and the following cut is made. File makers work very fast and accurately, and you would be surprized to see just how quickly a flat file can be finished perfectly.

If you look closely at a Swiss file, you will find the spacing remarkably even. The best small files are made in Switzerland, and they are entirely cut by hand. Of course the large file makers of this country have special machines to do this work, but no machine has ever equaled their hand work.

Files are divided into different classes: cross-cut, mill, double-cut, bastard files, and rasps. They are numbered according to their degree of fineness or coarseness—from #00 to #6, or from smooth second-cut to coarse and bastard-cut. Single-cut files have single, unbroken, coarse chisel-cuts across the surface parallel to each other but oblique to the sides. They are used on lathe work and by the machinist. They are also used by wood workers and stock makers. Double-cut files are made coarse, second-cut, smooth, and bastard, and are cut with two chisel cuts crossing each other, the second course with rare exceptions being finer than the first. These are especially adapted for use in the workshop. Rasps are cut coarse, second-cut, and smooth. They have teeth which are disconnected from one another, each tooth being made separately by a punch. These are used by blacksmiths, plumbers, wood workers, etc. They are the files which rough-cut the stocks and other irregular forms where an edge tool cannot be used successfully.

LIST OF FILES FOR THE BEGINNER

1—16 inch round file
1—12 " " "
1— 8 " " "
1— 6 " " "
1—12 " flat Cabinet rasp
1— 8 " " " "
1—12 " half-round Cabinet rasp
1— 8 " " " " "
2—12 " flat bastard files (1 for metal)
1—12 " " mill file (1 for metal)
2— 8 " " " " (1 for wood)
2— 8 " bastard files (1 for wood)
2—10 " half-round files bastard cut
2— 6 " " " " " "
1— 8 " crossing file #2 cut
1— 6 " " " #2 "
6 assorted narrow pillar files in different cuts
2— 6 inch three-square files
1— 2 " warding file #2 cut
1 doz. assorted 5½ inch needle files
1— 6 inch Barrett file
3 three-square die-sinker's escapement files

It is not necessary to purchase all the files on this list at one time, but add gradually to your collection as you need them. Some you will be able to find in the five and ten cent store.

File Brush—This is a very necessary yet inexpensive addition to your list of tools. With this convenient brush you can clean the file of chips.

File Handles—These are used in connection with the files. Do not attempt to use files without them, as they cannot be properly held and are dangerous as the tang may run into the palm of your hand, thereby inflicting a severe wound with the possibility of blood poisoning.

Furnace—This may be a gasoline torch, alcohol torch, blacksmith's forge, electric or gas furnace. A gasoline torch will satisfactorily answer the needs of the novice, but as you progress, a gas furnace, or if without gas, a blacksmith's forge must be added when heat is required to forge steel, and to harden and temper different classes of work.

Gauges:

(a) Surface gauge: This is the tool maker's type of gauge and is used for laying out work in connection with the surface plate.

(b) Auger-bit gauge: A device to clamp on wood auger bits to regulate measuring depths of holes.

(c) Marking gauge: This gauge is a device to scribe a straight line at a given distance parallel from a side. It is very useful in stock work.

(d) Depth gauge: A 6-inch Starrett or Brown & Sharpe depth gauge is very handy for measuring distances from surfaces.

(e) Screw-pitch gauge. You must have this essential tool on your list. Procure one that reads up to sixty threads per inch. With this gauge you do not have to guess at the threads by counting them with a scale as did the old-timers. That was all right, perhaps, for coarse threads, but practically impossible for fine threads.

(f) Thickness or feeler gauge: This gauge reads from .0015 to .025. It is very useful in checking the opening between cylinder and barrel on revolvers, and a number of other places in gun work.

Hammers—As you will need so many different hammers, you will find that it pays to make these as the needs arise. A light hammer is the most useful, so of course you must have one; then you must have the heavier machinist's hammer for forging, and a hammer with a copper head. The last can be made easily, and is necessary for removing dents from shotgun barrels and other work that might otherwise be marred. Make a fiber hammer for use on polished surfaces by securing a ¾ inch thin brass tube 1½ inches long and inserting a piece of round fiber, letting the fiber project from each end of the tube ¼ inch, and fit to a handle.

Indicator—This is only necessary when you reach the advanced stages of metal work. It is used to get work in balance and to run perfectly true in the lathe or to check the true surface on the laying-out plate.

Ladle—A small-size ladle is necessary for melting lead for many purposes, such as making bullets or vise jaws, and hardening springs.

Lathe—This is one tool that is absolutely necessary for a great deal of important work. It is rather expensive for beginners, but a number of small motor-driven lathes are now available at reasonable cost.

Lathe Dogs—These are most satisfactory when made by oneself. They are used only on lathe work and for driving work between centers.

Matting Tools—These are used for matting ramps, sight bases, ribs, and for borders in fancy checkering on pistol grips and forearms. They can be bought from a jeweler's supply house (name given in Directory), but for ordinary matting you can easily make your own. The operation may seem puzzling at first, but after you have become accustomed to their use, it is very simple. Taper one end of a $\frac{9}{32}$ square drill rod, file out the end with a small fine slitting file just as you would checker a stock, only have the teeth come up sharply. Harden and draw the temper to a very dark straw color.

Mallet—The novice must have at least two mallets made—one of rawhide, the other of wood. The rawhide mallet is the most serviceable, as you can use it in metal work as well as in wood work.

Micrometers—This is one of the most essential measuring instruments and a tool which can not be overlooked in the craftsman's collection of tools. Nor is there any economy in the purchase of a cheap one, for in gun work measurements are required as small as one-ten-thousandths of an inch. It would be best to buy either a Brown & Sharpe, or Starrett micrometer, graduated to read ten-thousandths of an inch in 1 and 2 inch sizes. The 1 inch micrometer has a measuring range from 0 to 1 inch by thousandths on the sleeve and thimble scales. With the vernier scale which is on the sleeve, readings in one-ten-thousandths can be secured. The thumb-piece on the end is provided with a click for securing the correct measurements with uniform tension. Many mechanics have a touch so sensitive that the end thimble is seldom used, but for the beginner it is well to secure the necessary practise.

There are other measuring instruments made, such as the vernier caliper, and height gauge with the vernier scales for setting to the correct measurements, but these are not necessary until you have advanced to special experimental work. Such instruments are also expensive.

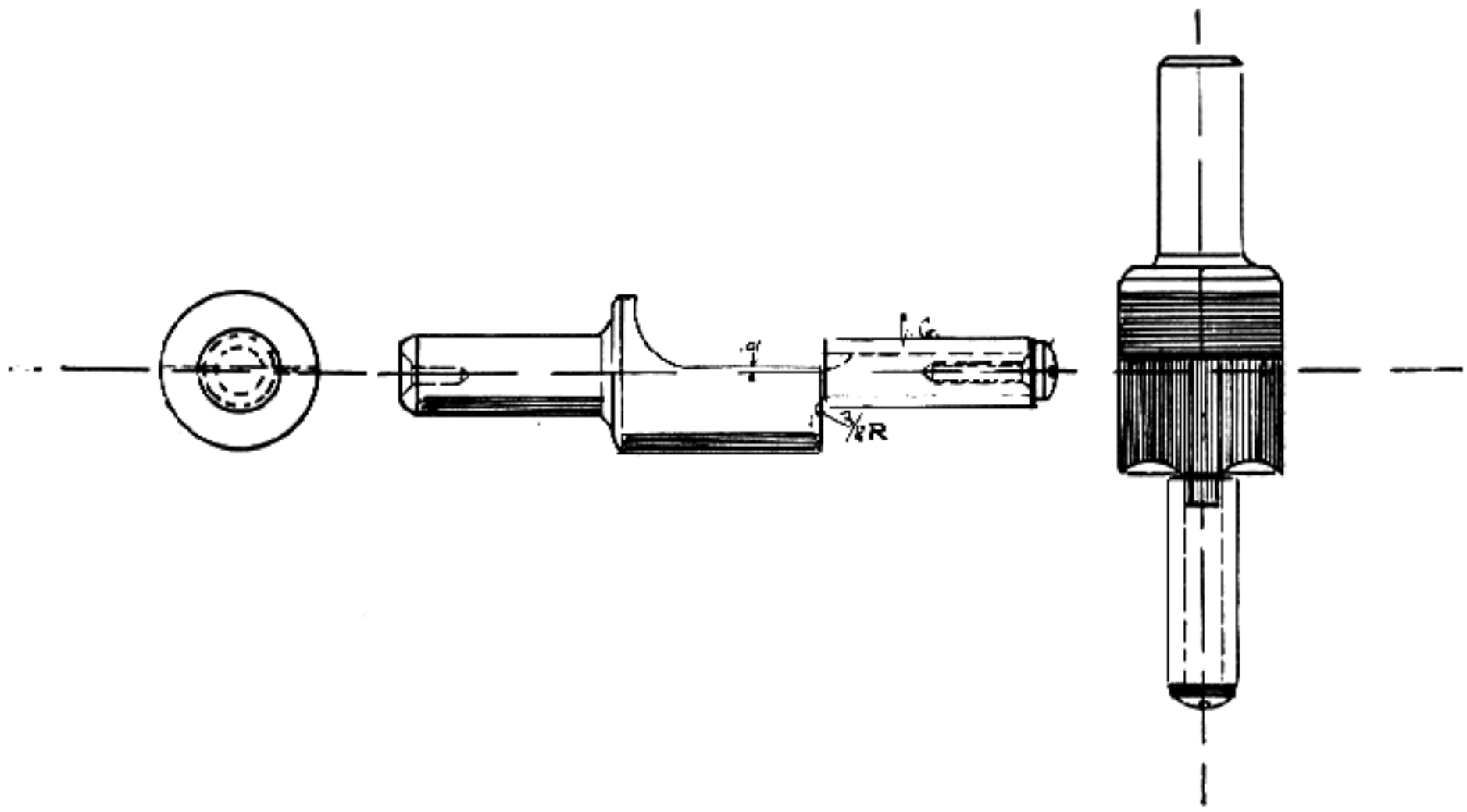

Fig. 12
Barrel-muzzle reamer

Muzzle Reamers—These are made for crowning or finishing the muzzle of a rifle barrel. Great care must be taken in the operation, for accuracy depends very largely on how perfectly the bullet leaves the muzzle. The proper method is to use a barrel plug and true the outside perfectly in relation to the bore, and then crown the end with a specially ground lathe tool to the correct radius. Not all amateurs are so fortunate as to have a lathe, so one must make a special tool, as shown in Figure 12, which may be used in the drill press. In using this device have some one revolve the press by hand so that you can use both hands in order to apply the proper pressure. It can also be done by using it in a hand brace, but one must make sure that the cutter does not chatter while revolving. A good plan is to have a local machine shop turn up a blank as shown and then file it so that there is a $\frac{1}{16}$-inch cutting edge, and have the cutting edges slightly beveled in opposite sides. Harden and draw the temper to light straw color. Have the cutting edges very sharp. The pilots of these tools must be stoned or, better still, ground to the exact bore of the rifle. If they are not ground they must be lapped so that there are no tool marks whatever, for a rough pilot will ream out the rifling. Great care, therefore, should be shown in making these cutters perfectly smooth and true.

Magnifying Glass—A very handy and inexpensive instrument for the inspection of surfaces, muzzles, etc., as a means of detecting any scars on surfaces, and for inspecting the cutting edge of a honed reamer. Figure 13 illustrates one that can be made; but first purchase a standard jeweler's glass and set it into the holder shown.

Miter Box—A trough-shaped form for holding work and directing the saw when cutting squares and miters. A satisfactory miter box is easily made, but if you have to do very much inletting, it would be well to procure the Perfection Iron Miter Box, since with this you can get any angle required.

Oilstones—It is well to have all shapes and sizes of oilstones, buying them as you need them. One that is necessary is the 3 x 2 x 1 inch combination of India and Wachita for honing wood-working tools. The coarse India will be found exactly right for cutting the hardest steel with ease, and the Wachita insures a keen lasting edge. This stone finds its greatest use in sharpening wood-cutting tools.

You will also require a lily-white Wachita 6 x 2 x 1 inches for the final sharpening. A carborundum slip-stone with a round edge for sharpening gouges, radius tools, and carving tools will

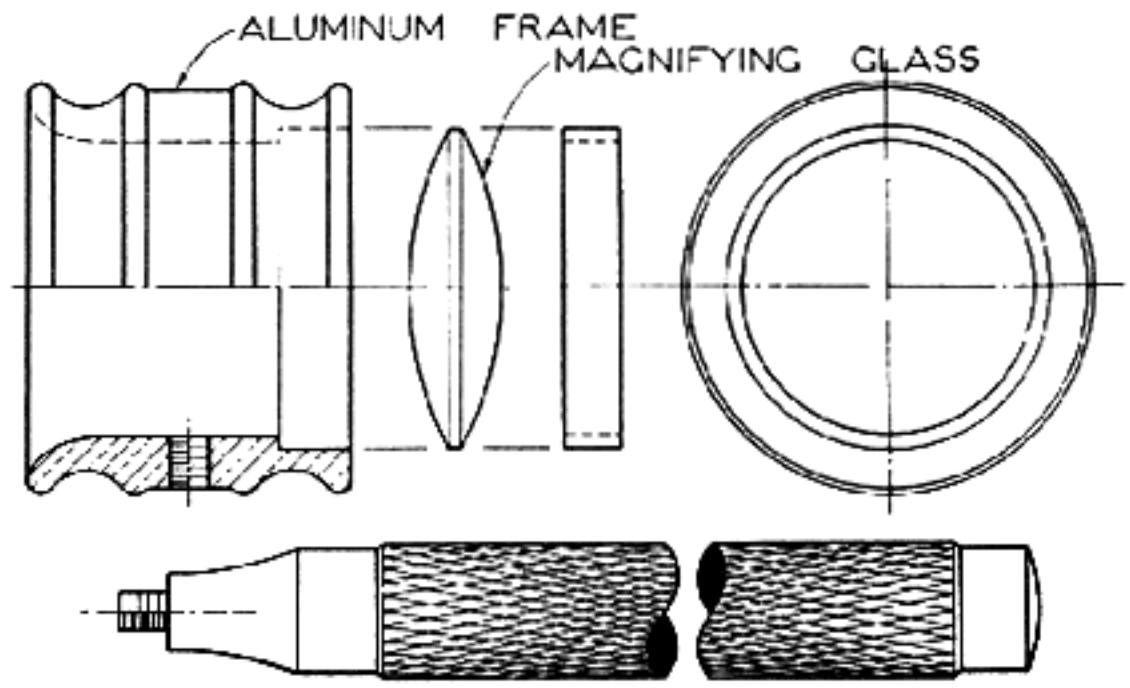

Fig. 13
Magnifying glass and holder

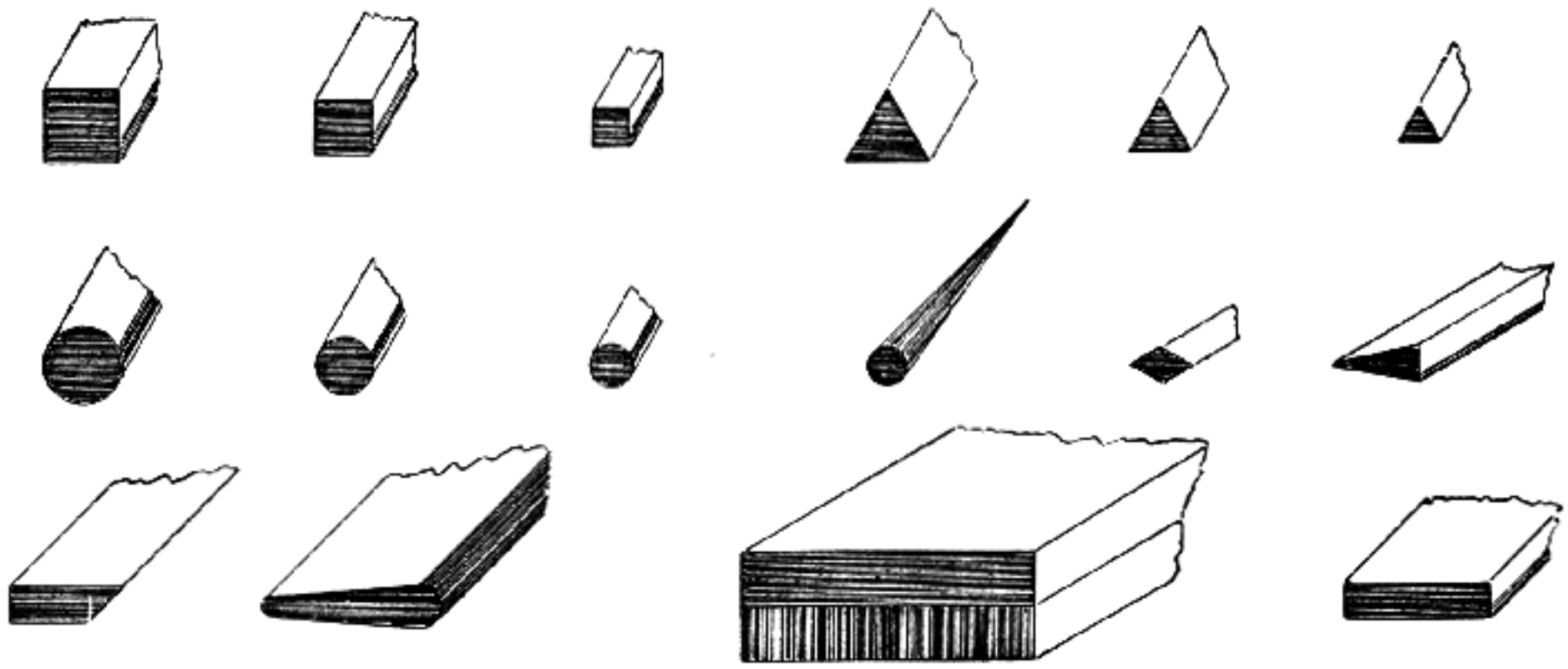

Fig. 14
Shapes of oilstones

also be needed. Carborundum and aloxite stick may be had in square, triangular, half-round, round, and pointed. These come in three different grades—fine, medium, and coarse grits. The Pike India oilstones can be had in a great many odd forms and shapes. There is also the Arkansas stone in two grits, hard and soft. For the finest work the hard Arkansas stones are best to put the final finish on a hardened surface, such as sear and trigger work, reamers, and cutting tools. The various forms are shown in Figure 14.

Oil Cans—One or two of these are necessary.

Pans—Small tin pans are handy for the reception of parts when rifles or shotguns are taken apart. Suitable boxes may be used.

Parallels—Inexpensive parallels can be made from cold-drawn steel 6 to 7 inches in length in the following sizes:

$\frac{1}{8}$ x $\frac{1}{4}$ inch; $\frac{1}{4}$ x $\frac{3}{8}$ inch; $\frac{1}{4}$ x $\frac{1}{2}$ inch; $\frac{1}{4}$ x $\frac{5}{8}$ inch; $\frac{3}{8}$ x $\frac{3}{4}$ inch; $\frac{3}{8}$ x $1\frac{1}{4}$ inches. These are very necessary to lay out work on the surface plate, such as sight bases, ramps, telescope blocks, and a number of other articles. When it comes to fine precision work, only hardened and ground parallels must be considered.

Plates—These come under the heading of bench and angle plates, surface plates, dowel-pin plates, lapping plates, and cast-iron plates for truing oilstones.

(a) Dowel-pin plates: Figure 15 shows how these are made. This is one of the most useful tools for the wood-working bench and is usually permanently fastened to one end of the bench. When you have holes drilled and reamed from $\frac{1}{16}$ to $\frac{3}{4}$ by $\frac{1}{32}$ and $\frac{1}{16}$ inches you can make a dowel-pin by sharpening the rough dowel nearly to size

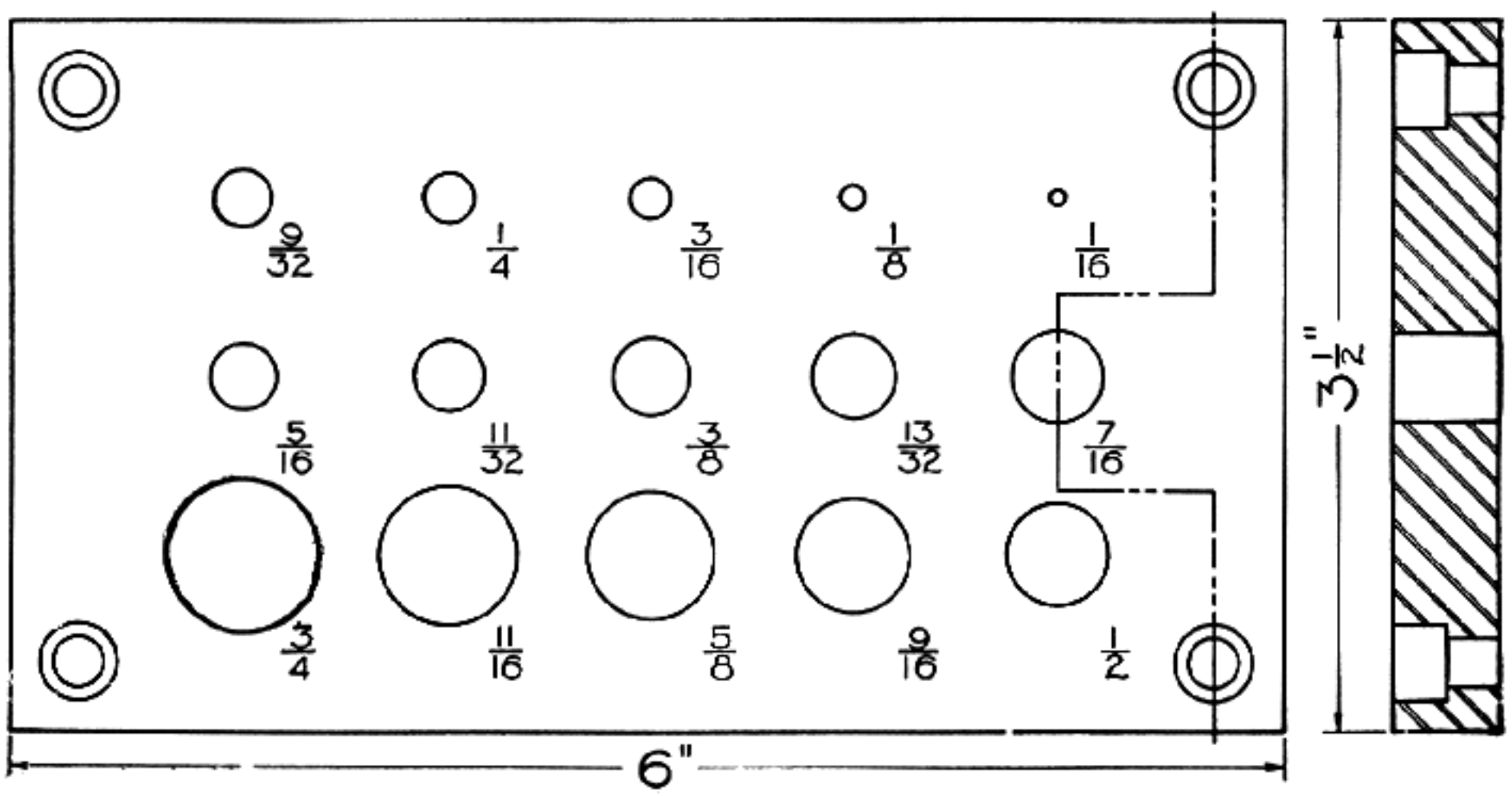

Fig. 15
Dowel-pin plate

and then forcing it through the required-size hole.

(b) Lapping plates: These are used to lap a true parallel surface. While not necessary for the beginner, as he advances into fine precision work he will require two of these plates, one of iron and one of lead. The one of cast iron should be 1 x 10 x 10 inches with the surfaces perfectly true, one side checked about ½ inch apart, and *charged* with fine abrasive. The lead lapping plate is made on a cast-iron base 1 x 10 x 10 inches with a number of holes drilled in the surface about 5/16 deep, then boxed in on all sides and a 50-50 mixture of lead and tin poured until a ½-inch thickness is built up from the surface of the cast-iron plate; this is then planed off smooth. You then have a lapping plate that you can use for fine abrasives only, using the emery or dry rouge on the lead plate to secure a very high finish on a surface. On the cast-iron plate, use the finest emery and olive oil.

(c) Oilstone plate: A cast-iron plate 1 x 10 x 10 inches is planed off to a smooth surface and used to true oilstones as they become worn to an uneven surface. It is impossible to do your best work with uneven oilstones or stones which have become clogged from use, so you must true up your stones. Use from 90 to 120 carborundum and water. This cuts the surface of an oilstone very fast, and in a short time you have a perfect stone again.

Planes, Wood-working—These come under the headings of block, jack, smoothing, and rabbet planes. All of these are used in stock and cabinet work, and of course every one is more or less familiar with the jack plane, block and smoothing planes from their general use in all wood work. Get these three to begin with, and if you can pick up some of the old-time wooden planes our forefathers used, add these to your collection. Some work is still best accomplished with these. Their use in stock work will be discussed in Chapter IV.

(a) Rabbet planes: As a general rule there is very little call for such a plane in stock work, but for special jobs outside of stock work there is often a place for it. A router plane is a plane-like tool under that name. This is used for surfacing a flat bottom when you wish to put in an inset as on the forearm, or to rout out a channel where you wish to place a special insert. This plane saves a lot of time.

(b) The spoke shave: You will find this tool one of the most useful in stock work. There are a number of different forms of spoke shaves, and you will readily become familiar with their use. They are inexpensive and a variety will add to your ease in working. If they are kept at a keen cutting edge they will enable you to form up a stock to far better outlines than with a wood rasp. There is a spoke shave of orange wood called the "Little Wonder" made by W. Johnson, of Newark, New Jersey; the stock is of wood and is perfectly shaped to get around odd forms; the cutter is of good steel, and you can maintain a good cutting edge at all times. If the blade should become loose in the handle, all that is necessary to tighten it is to place two wood screws against the tangs of the cutter which goes through the handle. Stanley also makes different forms of iron spoke shaves, and these can be added when the need arises. The chapter on stock work explains the use of these in detail.

Punches—These come under the headings of prick punches, center punches, drift punches, nail punches or nail sets, and wood punches.

(a) Center or prick punches: The best punches are those you make yourself from worn Swiss needle files. You can use both ends, making them in about three-inch lengths, ground round, and the temper drawn to a purple. The next best center punch is of a smaller size and made from dental burrs. Altho these burrs are small, they are convenient for laying out where fine center marks are required. As it is not necessary to draw the temper on these, you can grind up at least six and place them in a block. Of course you can buy center punches such as the Starretts' automatic adjustable-stroke center punch, but the ones you make yourself are the best. You will also need a one-quarter-inch center punch, and this can be made of drill rod, hardened and the temper drawn to a blue.

(b) Drift punches: These can also be made of ¼ and 3/16 inch drill rod, from 1/16 to ¼ inch ends. You can have your local machine shop make a set of these. It is also a wise policy to have two of each size, as you break them often. For the smaller sizes, dental burrs are the best as they hold up very well. You will find that dental burrs play a large part in gun work, so the next time you go to your dentist, ask him if he has a box of burrs that have become too dull for him to use any longer.

(c) Nail sets, or nail punches: A set of these can be bought very reasonably. Have them annealed and the ends turned down for a length of about 1 inch. Reharden and draw the temper to a blue, and polish out the cupped end. These punches are required to drive the round-headed pins out of fine shotguns, as a cupped punch of this nature does not mar the ends.

(d) Wood punches: These punches have cupped ends made from 3/16 and ¼ inch drill rods—the cutting edge made sharp by tapering from the rod size back about ½ inch to the desired size you wish

to make the point. The sizes are from $\frac{1}{16}$ to $\frac{1}{4}$ inch in $\frac{1}{32}$. Such punches are used to make a beaded border on fancy checkering and in a number of places to improve the design of wood carving.

Polishing Wheels—If you have a buffing head or intend to use one side of your Apex electric grinder, you will find it necessary to procure the following buffing wheels, 8 x 1 x $\frac{1}{2}$ inch hole: muslin, cotton, flannel, woolen, felt, chamois, buckskin, leather, and sheepskin. Also get an Utility Electric Motor and a small set of polishing wheels, as the list shows, to polish small parts.

Tap Wrenches—Add these to your list along with the wrenches to take the different sized taps.

Pliers—Go to any hardware store and pick out a number of different kinds. You will find them very necessary.

Reamers—Under this heading come hand reamers, taper-pin reamers, rose, chucking or machine reamers, English broaching reamers, chambering reamers, expanding reamers, counterbores, and burnishing reamers.

You will find that a number of years are required to collect all the reamers needed. Of course it is possible to purchase a great number of reamers, such as the standard sizes, still these are not satisfactory, as the relief is ground on these reamers for the every-day needs, while to obtain the most satisfactory results you must stone a reamer to the cutting edge to get a perfectly reamed hole. I make most of my reamers and have a good many, yet not a day passes that I do not need a new one. Here I shall only skim over the reamers and their purposes; in a later chapter I shall go into detail.

(a) Hand reamers: These can be had in sizes as needed. They come in sets from $\frac{3}{16}$ to 1 inch and you will find very little use for the large sizes in gun work. They can only be used by hand, using a tap wrench to pass them through the holes. Never use this form of reamer in a machine such as a drill press or lathe.

(b) Taper-pin reamers: This class of reamer has a taper of $\frac{1}{4}$ inch per foot or .0208 inch per inch. There are two classes of these reamers, one for hand use and the other for use in a drill press or lathe. The hand reamers are those required by the gunsmith and come in sizes from #000 to #13. They are so proportioned that each overlaps the size smaller about $\frac{1}{2}$ inch, so the necessary set is from #000 to #8. Figure 16 illustrates the two most generally used.

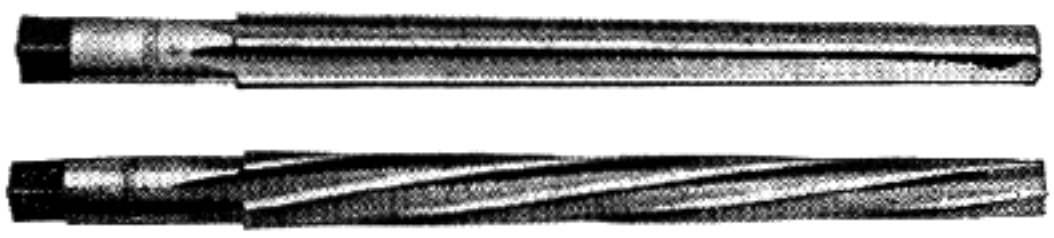

Fig. 16
Taper-pin reamers, straight and spiral fluted. The latter produces superior results

(c) Rose chucking or machine reamers: Only buy these as you need them, for in time you will make a set. Purchase the size near the particular size required, then grind it and stone the cutting edge so the hole comes to the desired size. Shown in Figure 17.

Fig. 17
Machine reamer

(d) English broaching reamers: This is the type of tapered reamer used by watch makers and jewelers. They come in smaller sizes than the taper-pin reamers, so get a full set of these. They not only come in handy where it is necessary to fit a small tapered pin, but to ream out sight apertures to any desired size. William Dixon of Newark, New Jersey, carries a full line of such tools.

(e) Cherries: These are used for making bullet moulds and must be made specially when you have an idea for a new form of bullet or for a special-size round bullet.

(f) Barrel reamers—chambering reamers and burnishing reamers: A chapter on barrel making in the second volume deals with these.

(g) Expanding reamers: In this type of reamer the flutes are slotted and have either a taper pin or nut on the end to expand the flutes. It is very seldom used in gun work, and besides is very expensive. One is illustrated in Figure 18.

Fig. 18
Expanding reamer

(h) Counterbores: Counterbores are used to make a flat-bottomed hole. They have a pilot to fit a drilled hole, so that the counterbored section of the hole will come perfectly true with the drilled hole. They are used in connection with fillister-head screws and a number of other purposes in gun work. This tool must also be made, as you cannot buy the sizes required. A flat-bottomed drill, ground up, will answer in a number of cases where the work is not too particular. Counterbores are used in a number of places on stock work where a counterbored hole is required to fit insets of buffalo horn, ivory, ebony, where a drill so used would break out slivers, an accident which must not happen on a finished stock. You will find that counter-

bores are like reamers. It requires a long time to collect a set. Figure 19 shows a standard counterbore.

Fig. 19
Counterbore

Rules or Scales—These come under the headings of steel scales, flexible scales, boxwood rules, etc. Everyone is familiar with this form of measuring instrument. Purchase one 6-inch and one 12-inch flexible-scale rule graduated in sixty-fourths and hundredths. Also one heavy yardstick and a five-foot folding rule to measure any desired length. The 12-inch flexible rule can be used for laying out checkering and other laying-out work, also to secure lengths or distances to space telescope blocks; in fact, these two scales are used more than any other measuring instrument.

Saws—Under this heading are hand-saws, hack-saws, jewelers' hack-saws, coping saws, etc. For the wood-working department you will need two hand-saws, one rip-saw, and one cut-off saw. In metal work you will need a hack-saw measuring about 12 inches. There are many different kinds of hack-saw frames and it is best to suit your own taste in this respect. However, be sure to obtain the best, as a hack-saw plays a great part in the gunsmith's trade. Buy only the best blades, such as the Atkins silver-steel blades with teeth from 20 to 32 per inch, the fine teeth for thin metal and the coarse teeth for wood and steel. Also get a jewelers' hack-saw frame with a large selection of blades. These blades only cost 10¢ per dozen, so have a dozen of each grade on hand. A coping saw is also very useful in wood work, and these are very reasonably priced.

Scribers—The best ones are made from dental burrs by grinding a very sharp point on one of the small burrs; then stone the point to a sharp edge, and make a small round handle from either ebony, fiber, or buffalo horn. The ones you buy are much too heavy and your lines will vary when taken from a straight edge or scale. A very good knife-edge scriber can be made from a worn hack-saw blade by grinding off the teeth and grinding the end to an angle similar to a fur-cutter's knife, and honing it to a keen edge. This is used in laying out lines on wood work, such as you lay out for the beginning of a stock.

Straight Edge—Figure 20 illustrates a straight-edge. These can be made of thin hard wood. One of their uses is to determine the amount of drop and pitch of a rifle. This is easily measured by fastening a thin piece 10 inches long transversely at one end.

Scratch Brush—This is used to prepare surfaces for the bluing operation and is obtainable at gun-parts supply houses. See Directory.

Screw-drivers—These are among the most essential tools, so by all means have a good supply, ranging from the small jeweler's screw-driver to a large long one for removing butt screws, such as hold the action to the stock in Remington, Ballard, and Winchester rifles.

The best screw-drivers are those made from octagon chisel steel, short in length and with a large file handle attached. Very good ones are also made from drill rod, but when it comes to strength, the octagon chisel steel holds up best of all. Spend a day making up a good set, such as Figure 21 illustrates. You will find that it pays in the end, for screws that are put in at the factory are very tight and their removal requires a driver properly fitted to the width of the slot. If it does not fit and the driver should slip, the result will be a badly marred head. You will find that on all shotguns the screw slots are very narrow and the screws very tight. These screws have been set up with a screw-driver bit used in a brace. You must then make a set of these from octagon chisel steel with the end filed to fit the screw and *without any taper*, for when you taper a screw-driver bit it

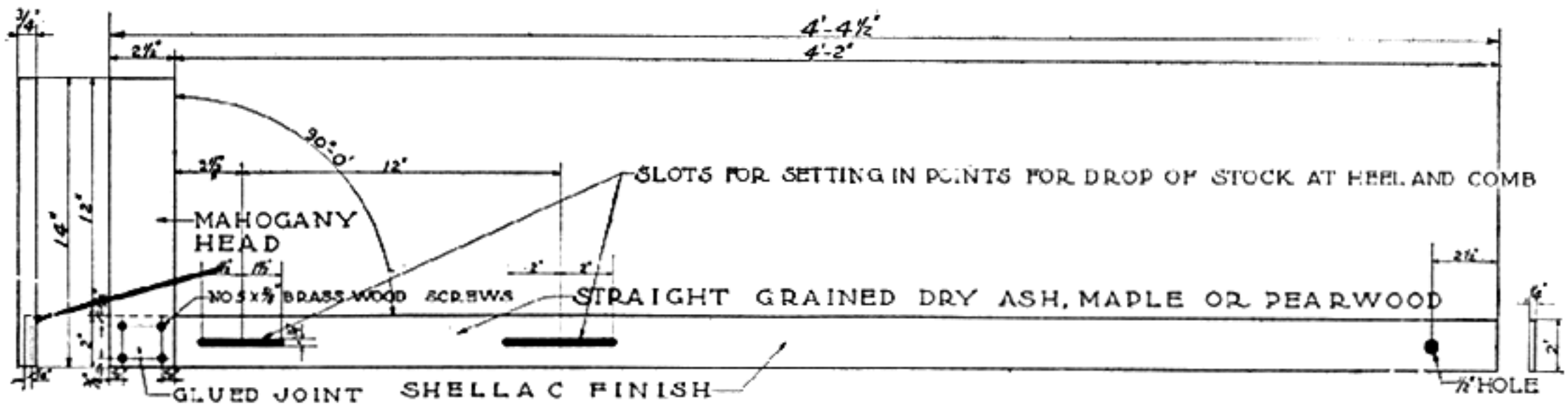

Fig. 20
Straight-edge for checking pitch of rifles and shotguns

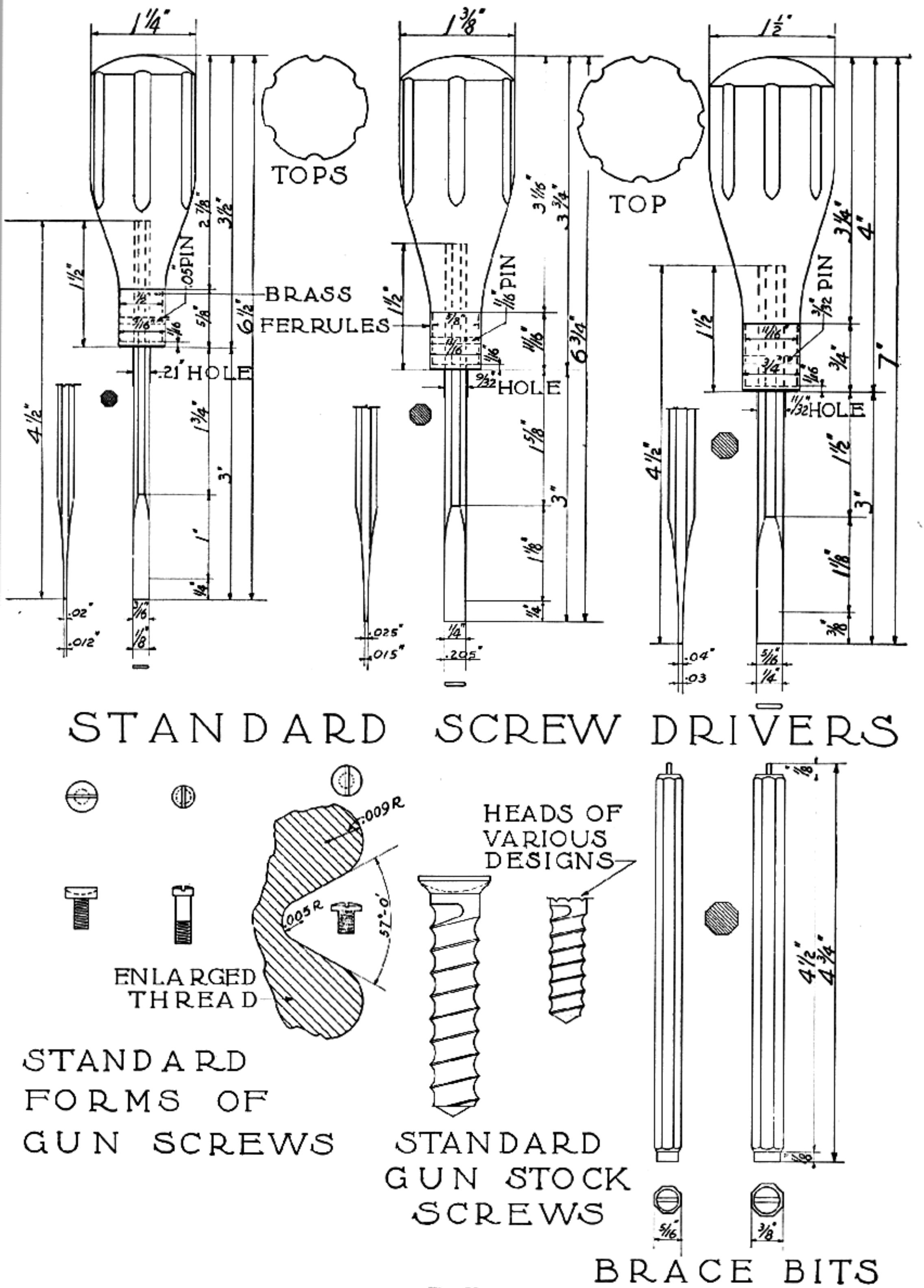

Fig. 21
Types of screw-drivers used in gun work

causes considerable spring when pressure is put on the screw, so the best is a short untapered end. When pressure is applied with the brace, the screw starts at once.

Screw-drivers of all kinds can be obtained from hardware stores, but if you buy these you will find that they are not suitable for gun work, so by all means make your own. When you become accustomed to the use of screw-driver bits you will use them at all times for the starting of all guard screws, large-size shotgun screws, and other screws. Experience will teach you to respect screws that look doubtful and that require more than the ordinary handled driver to remove.

Spring Winding Tool—This is made from an old worn ten-inch flat mill file. Chapter XXI, Volume II, is devoted to the making of springs and explains and illustrates the use of this tool.

Steel Letters and Figures—Sets of letters and figures in 1/16, 3/32, and 1/8 inch sizes are very handy and should be included in the list of tools for stamping names and numbers on parts.

Scales (Weighing)—A trigger-testing scale is required to calculate the pull of either a revolver, pistol, shotgun or rifle. A. G. Parker of Birmingham, England, makes the best. Also include an XLCR scale which weighs from 1 to 25 pounds. This will tell you just what the weight of a firearm is.

Stools—One or two wooden stools made to the proper height are necessary at times when you have bench work which is done more conveniently while sitting down—such as laying-out work.

Squares—These come under the headings of combination squares, die-makers' squares, tri-squares, and solid steel squares.

(a) Combination square: Get this with two blades, one a 12-inch blade and the other a 24-inch blade. The center head and bevel protractor are also very useful in all classes of work. When certain distances are required, these heads can be clamped at any portion of the scale; the center head can then be used to find the exact center of a round bar, and the bevel protractor used to lay out or check angles.

(b) Die-maker's square: This is small, but the most useful of squares. It has four blades 2½ inches long: a standard blade, graduated in thirty-seconds and sixty-fourths; a bevel blade with an angle of thirty and forty-five degrees; one narrow blade, and one offset blade.

(c) Try-squares: The gunsmith requires one or two of these, one small-size for checking work in small places, and the other 4 x 6 inches.

(d) Solid steel square: This is also a square for which two blades are required, one 3 x 5, and a small knife-edge square to check work with the larger square. These tools are especially necessary in metal work.

(e) Carpenter's square: One with a six-inch blade for squaring actions and laying out stocks.

Tongs and Tweezers—These are essential and it is well to equip the forging section of the shop with:

1 pair 8½ inch folding tongs
1 " 12 or 14 inch bent crucible tongs
1 " 14 or 16 inch bent crucible tongs
1 " 14 or 16 inch bent steel crucible tongs with ring
1 " 14 or 16 inch forging tongs
1 " disc tweezers
1 " hawk-bill tweezers
1 " three-leg tweezers
1 " round-pointed tweezers
1 " flat-pointed tweezers
1 " locking tweezers—to hold small screws while placing them into position
1 " small blunt-pointed tweezers—to pick up small screws, etc.

Templets—Templets are made when you have a considerable amount of repetition work in the production line and wish to save time in laying out certain parts, especially when more than one person works on that operation. A templet is necessary in all classes of die work before you can get the ultimate form that the die is to produce. For instance, if you were to make dies for a butt plate, the first die you would make would be the forming die to produce the proper length, width, and form you wish the plate to assume. You would then make the necessary try-outs on your forming die until you had the correct form. From each piece you file out you would scribe off the outlines on another piece of metal until you have the perfect form. This would be filed out and used as a templet to make the blanking die. In certain operations on gun work, small templets are made to serve as depth gauges, radius gauges, and odd forms where measurements cannot be made. Templets are made from thin steel or spring brass stock on which it is easy to follow the lines. These will be shown and their use described in other chapters.

Utility Electric Motor—This is a handy and inexpensive motor for small polishing work. It will also be useful in driving small Millers Falls polishing heads.

V-Blocks—A set of these is very necessary in gun work and plays an important part in a hundred and one different ways. Both Starrett and Brown & Sharpe list these in their catalogs.

Vise—A workshop is not complete without a good vise, and you should have the best. It must be of the swivel type and have 3½ or 4 inch jaws. The Reed vise costs about $17 and is excellent. The Penn, #524, 4-inch vise, swivel base, is also

good and a little less expensive. Also secure a Yankee Drill Press vise #990. This will hold only small parts, but it has a V-notch in the back of the jaw to hold round stock, and the movable jaw has a swivel plate to take tapered work. You will also find in working on small metal parts such as sight blades, shotgun triggers, small springs, etc., that it is possible to clamp this vise in your large vise and then work on small metal parts much more conveniently. Also secure a Jacobs #1 drill chuck, having the shank turned straight, as this holds all small round pins and screws from 1/32 up to 1/4 inch, and is handier than the advertised pin vises which are required in various sizes to hold the different sizes of round stock that you will work on. These are all the vises you will need in the beginning, but you will find that as your work increases you will necessarily add others.

Vise Jaws—The jaws of a vise are roughly checkered and tempered, and if you were to hold a piece of finished work in them, the impression of the jaws would disfigure it; so it is necessary to make up false jaws, such as vise blocks, lead jaws, copper jaws, and leather-faced jaws. Figure 22 shows the different jaws necessary for both wood and metal.

Other vise clamps may be made of pieces of old leather belt upon which a little beeswax has been spread. These, when placed between the jaws and forced together, will adhere to the vise. A very handy fixture can be made from a barrel stave or thin piece of gum wood by cutting out the center for the beam of the vise to straddle, letting it extend from five to six inches. Make two tapered pieces for the ends and either nail together or place a 1/4-inch machine screw through to hold together and tighten; glue thin pieces of leather to the face. This false jaw then has enough spring to release as the vise is opened.

Also make two sets of vise-blocks and glue from 1/4 to 1/2-inch white felt to face of the wood. These are for barrel and stock work, as the soft felt absolutely protects the finished parts and prevents a finished barrel or stock from being marred, and yet the vise can be tightened sufficiently to hold while working. Also have a pair of false jaws made from cast brass and drill indentations to various depths to hold screws or rods without marring them. Wooden jaws should also be made to hold odd-shaped parts such as are found on shotguns. As time advances you will find a large collection of the wooden jaws on hand, and will have gained considerable experience in holding work properly in a vise.

Welding Outfit—This comes under welding and brazing, which are discussed in Chapter XXVI.

Wrenches—Old percussion-lock guns which have a nipple require a nipple wrench, so if you are a lover of these it will be well to have this type of wrench on hand. Also have a 15-inch Crescent wrench to remove barrels and tighten them into receivers.

This list of tools has not been compiled from conjecture or from a hardware catalog, but from an actual list of tools used during the course of many years' work on firearms and general shotgun practise, including gauge making, tool making, die making, instrument making, etc. To the beginner this list may seem extraordinarily long, and a discouraged attitude on his part may result, for he may not realize what a great part even some of the simple tools will play. The advanced student, on the other hand, may think there are several important tools lacking, but as he progresses into Volume II the mechanical art of tools will be explained more extensively.

I do not expect the beginner to buy all the tools on this list at one time; on the contrary, I would suggest that he secure only the work bench and vise. Decide upon just what you want to do and the tools required for that particular project. Then make an effort to acquaint yourself with the tools. Read over this chapter until you are thoroughly familiar with it, and obtain a number of the catalogs listed in the Directory; this will give you a general idea of the expense to be encountered in the layout. By all means do not attempt your first work upon some finished arm, but invest in some of the old firearms in Francis Bannerman's catalog at prices from $1.50 to $5.00, or even upon some simple piece of wood.

The novice has a tendency to jump into a new hobby with such enthusiasm that he is ready to buy anything and everything pertaining to it. This is, however, most unwise, inasmuch as one is apt to purchase many tools that will prove of little or no value later on. In considering the use of woodworking tools we must form ideas and study their purpose with reasonable judgment, so naturally it is best to purchase these as needed and advance with some definite plan in mind to greater needs and additional tools as necessary, so that our financial resources will not suffer.

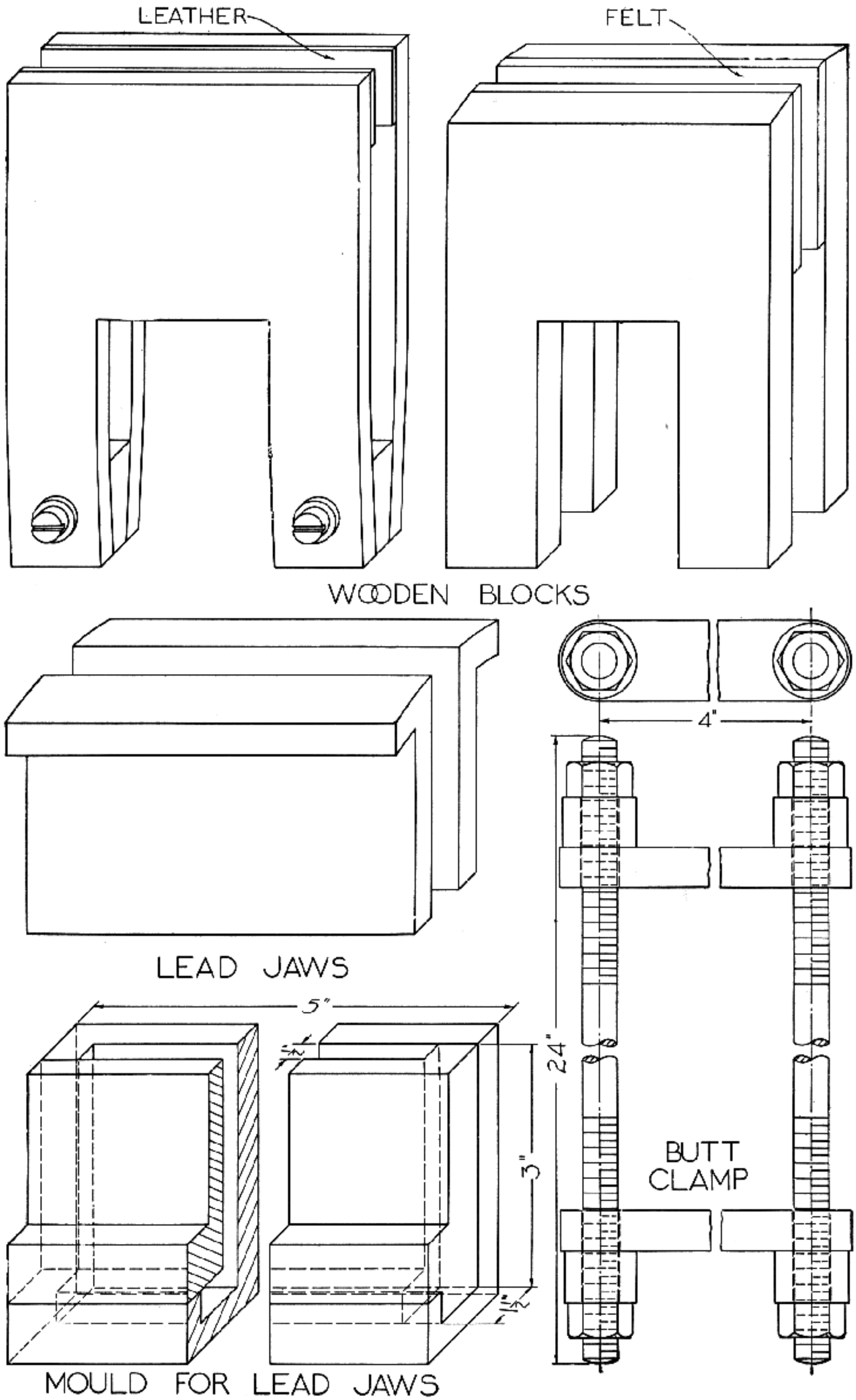

Fig. 22

Bench-vise blocks commonly used in the gun shop. The butt clamp is employed when fitting shotguns or single-shot actions into the stock blank

CHAPTER II

Special Home-made Tools and Equipment

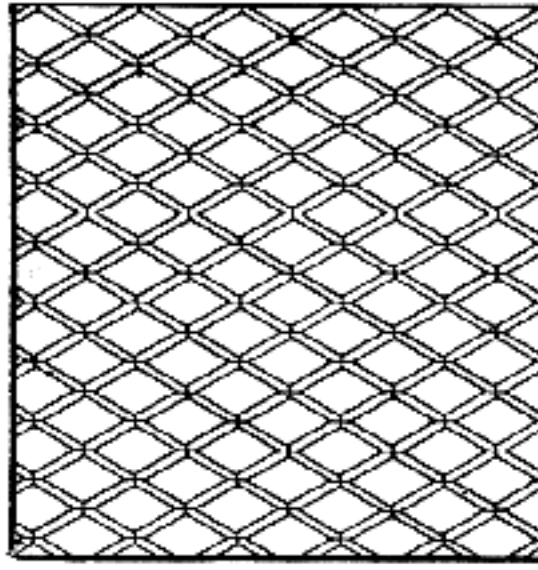

CHAPTER II

Special Home-made Tools and Equipment

THE gunsmith, to be able to carry out all work successfully, must construct various special tools or fixtures and purchase others if he is to make this work a pleasurable and profitable means of spending what might otherwise be idle hours. Man is known as the "tool-using animal," but how many of us can use our hands to advantage to create articles for our own needs? Your schooling has taught you to do things in certain ways and by certain rules, but at times these teachings must be thrown aside and you must turn to originality and create the part suited for the occasion. This chapter is designed to enable the beginner to carry out the most essential undertakings; after having set a place aside for a workshop and getting together some of the most necessary tools, other equipment will be explained as each need arises.

The trade of a gunsmith, shotgun or rifle maker calls for many tools which cannot be purchased, and when manufactured by an outside concern these usually cost far more than if made by yourself. Do not construct a number of makeshift contrivances, using a nail here, a piece of wire there, and so on, even tho an enforced makeshift is required in many instances. These are often only steps toward new labor-saving devices; but discard the makeshift as soon as possible and construct one which will be a credit to your ingenuity—and do so before anyone can accuse you of being shiftless. A gunmaker is constantly making devices for his different needs as they present themselves, and if the information contained in these chapters is carefully studied many of your problems will be reduced to a minimum.

Chapter I contains a thorough description of various tools. This chapter will deal with our tool problems a little differently, and will consider a few that are non-essential but can not be dispensed with conveniently.

Checkering Stand and Cradle — Figure 23 illustrates a checkering stand which, for the present, we shall class among the non-essentials. A checkering cradle can be fastened to the end of a bench, used, and then removed and put away until it is needed again. But if a well organized workshop is

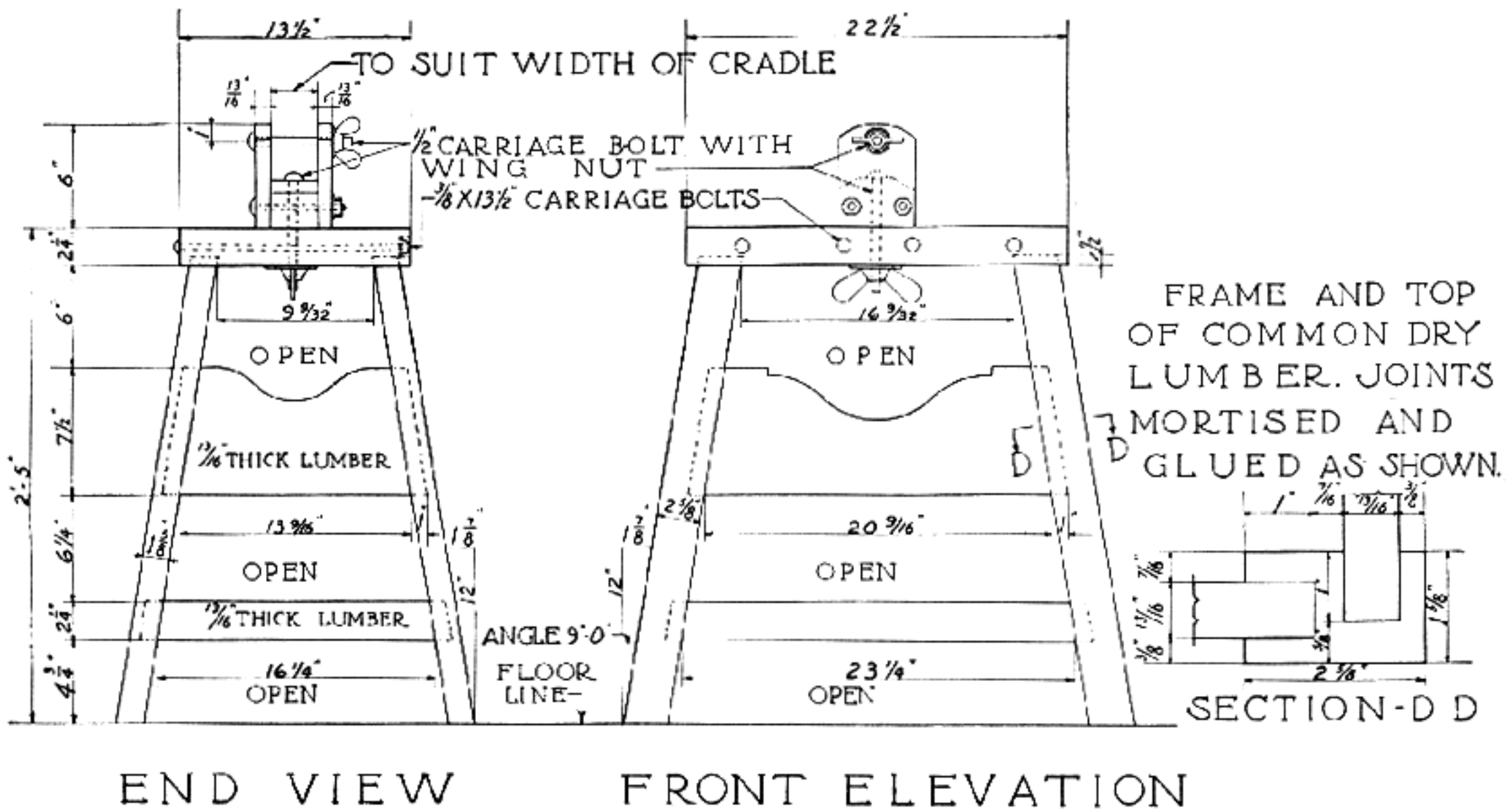

Fig. 23
Bench or stand for checkering cradle

being striven for, a stand should be made, and fastened to the floor in a pleasant location near a window, where not only good light is available at all times, but where it is possible to gaze in the distance to rest the eyes when they become tired from checkering. After the student becomes accustomed to the use of a checkering cradle and stand, he will place them in the most essential class, for they are not only used for checkering but to sandpaper stocks and to apply the different rubbing preparations and oil. It will be surprizing to see how many operations such an inexpensive fixture will be called upon to perform in the course of all the stock work. A stand and cradle, even tho not in use, give the shop an atmosphere of a gunmaker's establishment and are the emblem of his art.

Figures 24 and 25 illustrate two checkering cradles. The simplicity of Figure 24 will enable the student to construct it from almost any material at hand. The adjusting screws can be plain ½-inch bolts without handles; the heads of the bolts can be drilled and pins inserted which serve quite as well as the wooden handles. The frame can be made from 2 x 2 inch timber, and the ends constructed from heavier material with common machine bolts filed down on the ends for centers. Adjustments can be made by nuts on each end of the bolt. Holes can be bored certain distances apart for the required length of stock to be used. With such adjustments it is possible to clamp it solid in the position required. The cradle can be used in a vise, altho a bench has been illustrated; but unless you have a number of stocks to checker, this is hardly necessary. In any case, it is wise to make one of sound construction. The drawings are sufficiently detailed to follow without difficulty.

Figure 26 is more complicated and a much better cradle to use for stock work. The frame holder is made from common angle iron with a steel plate attached to the bottom, and this in turn is fastened to the stand. If an angle iron is not available, the frame holder can be made of hardwood in two pieces, with the center cut out to receive the cradle. The cradle width is reduced to two inches, allowing ¾ inch on each side of the frame holder where the

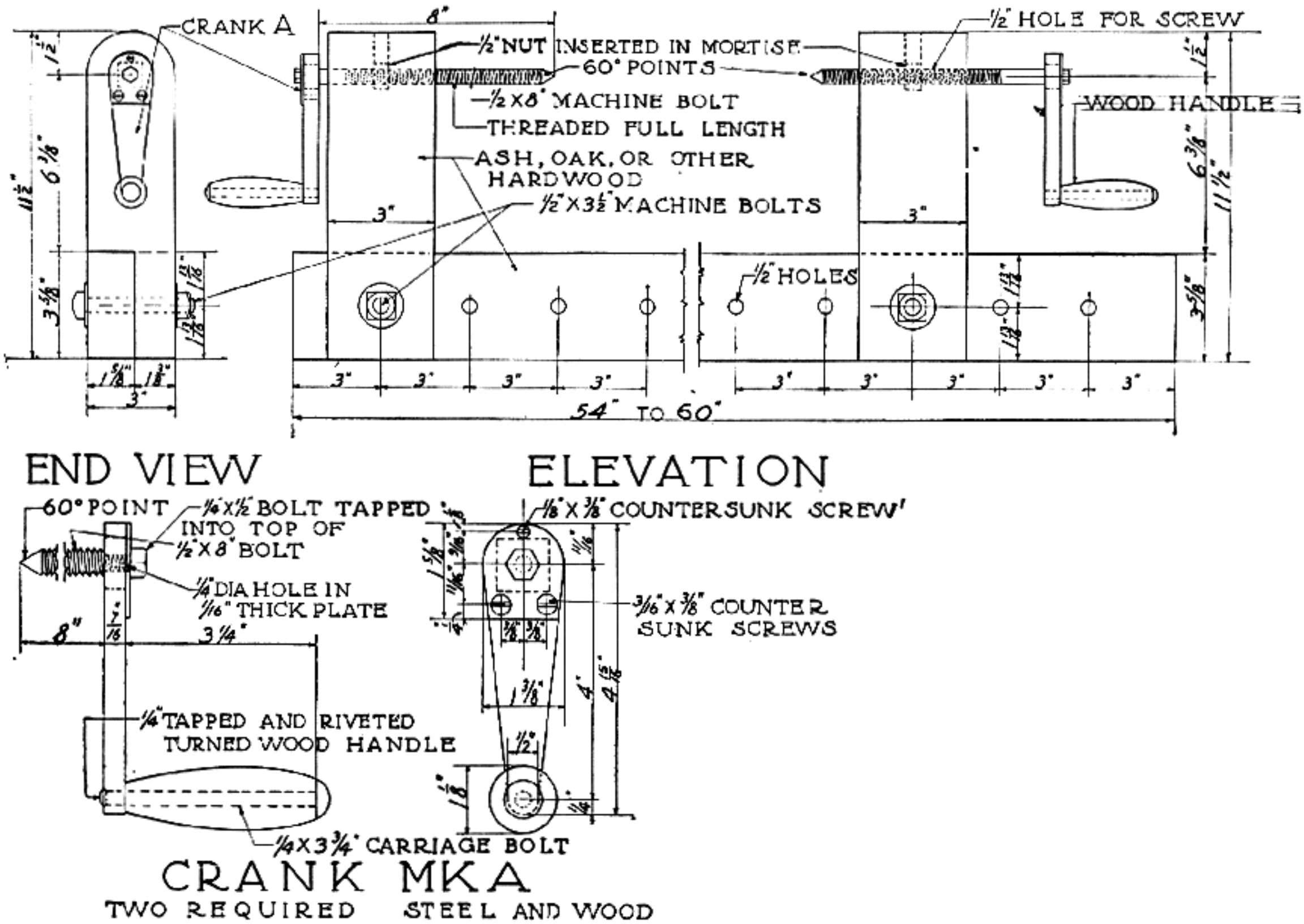

Fig. 24
Checkering cradle for the amateur's construction

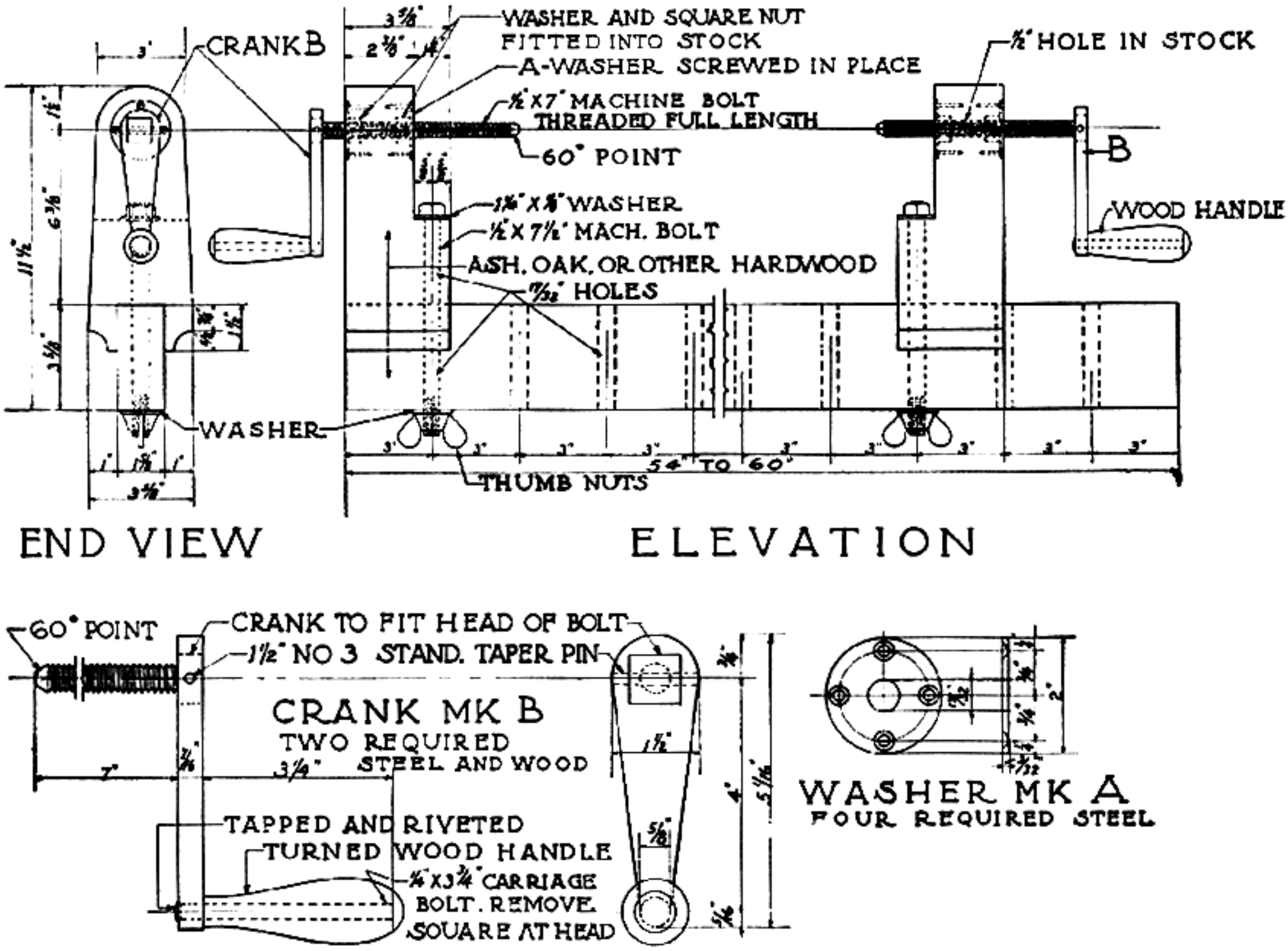

Fig. 25
Improved checkering cradle for the amateur

cradle is clamped by the cross bolt. Even when the holder is made of angle iron, a two-inch width of cradle may still be used instead of the heavy member shown in the illustration. The angle brackets *A* can be bent from ⅝ x ¾ inch cold-drawn steel, and as there is a tapped and a plain drilled hole on each end of the bracket, these may be reversed when a longer stock is encountered, thus providing a greater length between centers.

Figure 25 shows a simple form of cradle on the same principle as the first one. In the following chapters many uses for the checkering cradle will be indicated, and you will discover others for yourself. These forms are offered here to suggest to the beginner what may be done, not only in designing a cradle, but in devising other aids to accuracy and the simplification of difficult work.

Checkering Tools — After studying Figure 3 you will see that there are a number of ways in which checkering tools can be made. One of the best tools to construct is the one shown with separate cutters which screw together; with this it is possible to sharpen the inside cutting edge as well as the outside.

They can also be adjusted to any desired width or spacing. Our present checkering tools only cut with the outer teeth. These are easy to make, and produce an exceptionally fine checkering pattern, but when two separate blades are made and screwed together we have one of the best checkering tools that can be constructed.

Border tools can be made in a V form, radii, V and radii, or on an angle. Generally these tools are only for experimental purposes, for the best checkering has no border at all; and after you have become expert, you will find that you can reach the lay-out lines without any run-overs, and the border tools will be laid aside.

The English type of checkering tools shown in the same illustration are excellent. They are usually made with the single cut, and after one becomes accustomed to them very good work can be produced. Examine the checkering on a fine British gun and you will see that the diamonds are perfect and sharp. Such checkering was produced by one

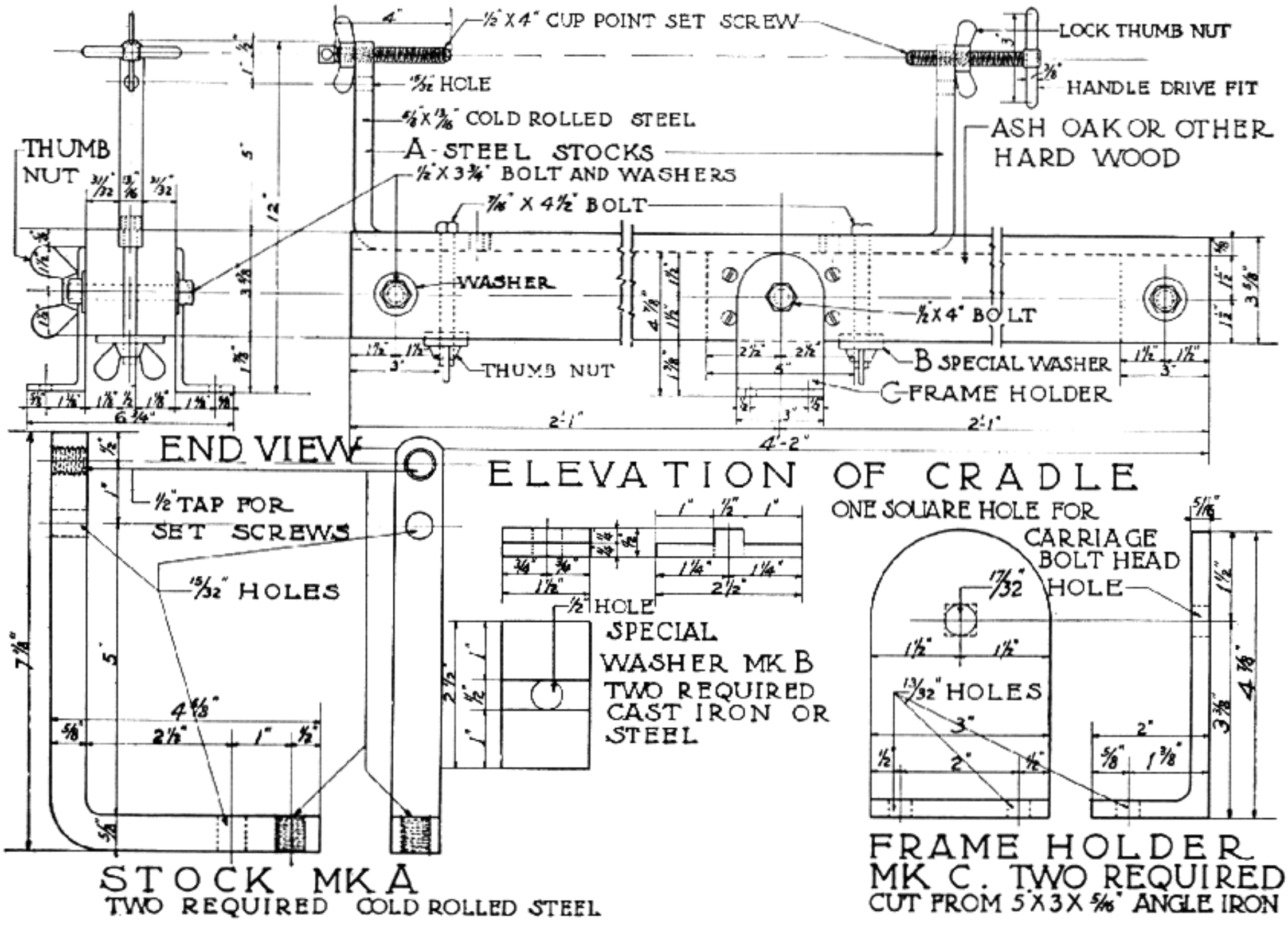

Fig. 26
Checkering cradle most generally used in the gun shop

of these tools. In the end, after summing up the merits of different checkering tools, you will find these the best.

Motor Grinders — These are among the most essential parts of any shop where mechanical work is performed, for they are called upon more times throughout the day than any other machine. The beginner should manage, if possible, to have some kind of a grinder, even if nothing better is available than an electric fan motor. Small cloth, leather, felt, and wooden discs with sandpaper attached are almost indispensable at times. Any investment you make in this equipment will pay for itself many times. There are many electric motor grinders on the market costing from $30 up. It is impossible to list them all, but a good selection may be obtained from machinery-supply or mail-order-house catalogs. Figure 27 illustrates a Black & Decker bench grinder.

All these small reasonable-priced grinders carry two emery wheels and are usually of the ball-bearing type; one emery wheel can be removed and this side used for polishing and buffing. These grinders are small and compact and may be conveniently placed on the end of the bench. At an additional cost, they are furnished with cast-iron floor pedestals; these are usually preferred, as they leave the end of the bench free and clear for other purposes. On all the small grinders, the shafts are ½ inch in diameter; therefore, all holes in the polish-

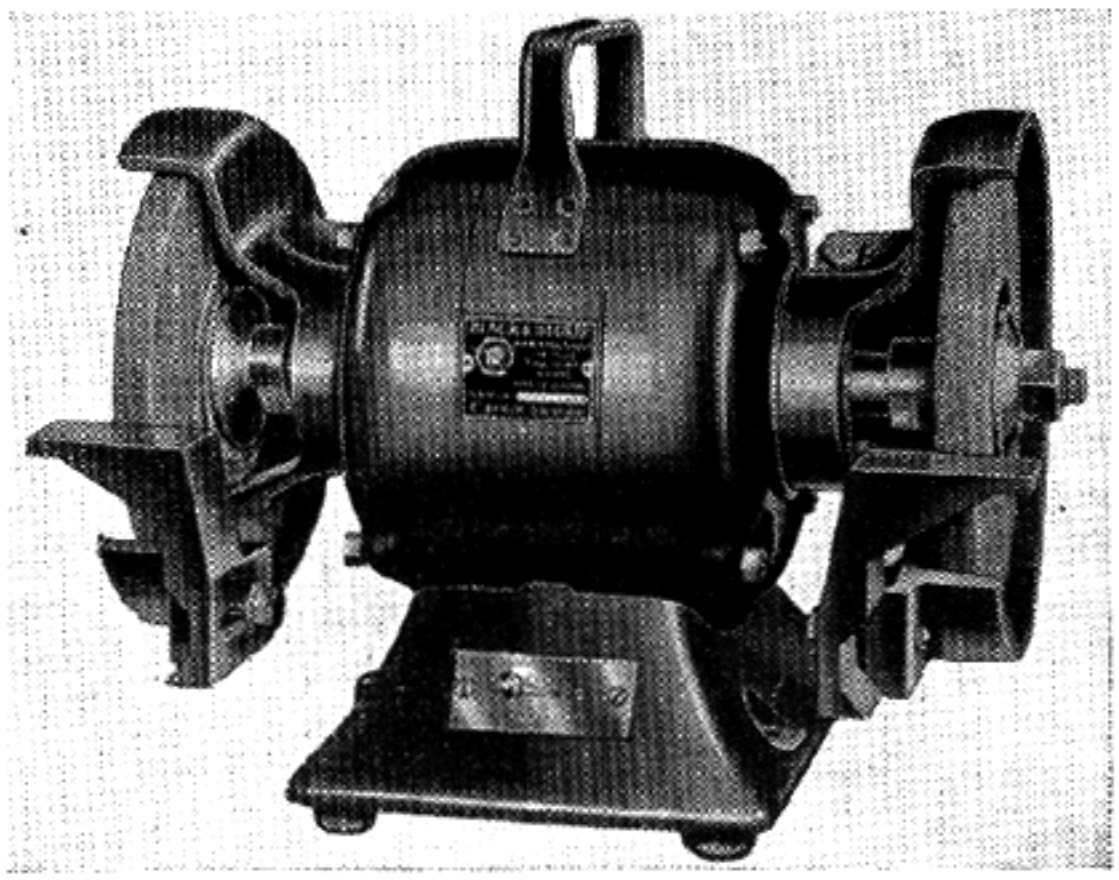

Fig. 27
A portable bench grinder is indispensable in the small gun shop

ing wheels or discs must be of this size and a free but perfect fit, or too much vibration will result. The grinders are equipped with movable guards and a tool rest, which can be conveniently adjusted to heights; on some it is possible to get various short angles. With the emery wheels removed, it is possible to use wire or cloth buffers and sandpaper discs for dressing rubber recoil pads. Various uses for the grinder will continually occur. By using different-shaped emery wheels with thin, rounded, or bevel edges, it is possible to grind out places on hardened parts which would ordinarily require annealing and the use of a file.

Fine circular steel wire wheels are the secret of all fine bluing on firearms; they not only card off rust during the bluing process, but also burnish the barrel. A fine wire buffing wheel should be used only for the bluing operation; when first purchased it should be boiled in strong lye water to remove all traces of grease, and then rinsed in clean boiling water. Should the fine wire show evidence of rust, it indicates that there is no grease or oil on it to spoil the bluing. Other fine wire wheels should be used to remove rust from gun parts and to burnish nickel-plated revolvers. It is surprizing how one of these wheels will clean up a spotted barrel when small rust spots have formed, particularly on fine shotgun barrels.

Muslin buffing wheels are also required on the grinder. The 8″ diameter is used for polishing. The sewn wheels are classed as "hard" and the unsewn as "soft." Keep a number of these wheels on hand, as well as the different polishing compounds, such as Tripoli, rouge, Vienna lime, emery paste, etc. Others may be surfaced with fine emery for the breaking-down process before the other compounds are used for a final polished surface.

Wooden wheels should be made from hardwoods such as maple, cherry, or beech. Scribe a circle of the desired size, and with the ½-inch wood bit, bore out the center for the shaft, and saw the outside of the circle. Clamp it on the shaft and true the outside with a regular turning chisel. A rest must be provided so that the chisel can be handled more conveniently and will not catch in the wood, thereby causing a painful injury.

Coat the sides of these discs with glue or shellac and apply different grades of sandpaper or emery cloth, clamping them in place with other boards or discs, and allow to remain until completely dry. The outside edges are then trimmed off to the outside diameter of the wood. These are used when a flat surface is to be polished; with the coarser sandpaper disc, the rubber recoil pads are dressed to the outside contour of the stock.

Special wheels of felt make the finest wheels for polishing purposes. They may be used with fine abrasive glued to the outside surface or used with emery paste, rouge, or Tripoli. Very fine polishing wheels are also made from rubber, leather, etc. The leather wheels are used for various shapes and forms after being turned in a lathe.

Another useful accessory is a chuck made so that it can be screwed or slipped on the end of the grinder spindle and then fastened by a headless screw. This arrangement is used to polish small pins and to file a number of pins and screws. A small firing pin or a bead for a sight can be made in this manner. A successful lapping operation can also be accomplished by holding the lap in the chuck and holding the work in your hands.

There are various wood laps which can be made: square-faced, pointed, round, oval, etc. They are also made small in small sizes to polish the inside of metal parts, such as trigger guards, where it is rather difficult to reach with any other form of polishing wheels. These are made in a cone shape and screw on the end of the spindles; they should project between two to four inches from the end. Wooden laps made from hard or soft wood are used for polishing steel or any other form of metal and general lapwork. The substances used on these laps are oil and flour emery, Vienna lime, rouge, rottenstone, tripoli, etc.

Wood Chisels — Often these can be made from worn files which have been discarded from machine shops; special wood chisels can be forged from high-carbon tool steel, and even made from worn power hack-saw blades. At times the beginner will do much better to forge all the special chisels required for the stock-making operations and in the end will find it much cheaper than purchasing them. Of course, you must buy some chisels, but the ones you make will be more prized. A study of your needs should determine your purchases; for instance, the most-used flat chisels are the narrow ones; therefore, purchase ⅛, ¼, ⅜, ½, ¾ inch tool steel in 12-inch lengths.

Tangs are forged on these, and one piece will make two chisels, tho shorter ones are sometimes required; but when forging a chisel for wood working, always make two. I am a great believer in pairs of tools, for when one becomes dull or an accident occurs, there is always the second one to fall back on. After the tangs are forged, dress the ends by heating and forging the cutting portion so that there will be less grinding to be done; this also gives the steel a more harmonious structure and a finer grain.

Gouges — The half-round or radius gouges are made from drill rod; the diameters used are 1/8, 3/16, 1/4, 5/16, 3/8, 7/16, and 1/2 inch. If there should be a shaper or a milling machine in the locality—or a friend who is a machinist—they can be milled or shaped and the ends turned, as illustrated by Figure 5. Of course, the cutting end is also forged to nearly half its diameter and then filed; but since the tangs must be turned, a machine operation is the most accurate means of holding the true radius of the rod used. After the end is shaped to half its diameter on an angle, the cutting edge is filed to a true sharp point, only leaving enough metal to stone after the hardening operation is performed. A set of such gouges is indispensable in wood working, particularly when making a new stock.

Bottoming Chisels — These tools can not be purchased, so they must be made by the student. The ordinary carving or small straight chisels are not adapted to many operations, especially the inletting of shotgun actions into stocks. Bottoming tools are made from 3/16 x 5/16-inch tool steel, forged and filed to shape. Figure 28 illustrates the forms most used to meet requirements. These are made to suit the particular job you may be working on. This is the best way to make all such tools, as you can then better appreciate their value. In forging these tools, constant heat is required throughout the operation, or checks will develop in the hardening. Shaping of the end is an upsetting operation, and this is best done in a vise with the flame of a gasoline torch, holding the steel rod while the upsetting takes place. After the forging operation is completed and the tang is drawn out, the cutting edges are filed to shape.

All wood-working tools named here should be given very careful heat-treatment so that they will maintain their keen cutting edges. After the hardening operation, the tools are polished and the temper drawn to a purple; then the edges are stoned to a keen cutting edge with fine oilstone, finished with two fine Arkansas oilstones, and then stropped.

Handles must also be provided, and can be made from straight-grained maple. They are either turned or formed in the shape of a square, similar to the old-fashioned handles made by old-time cabinet makers. These handles are very simple to make and give the beginner practise with wood-working tools that have been supplied for the shop. Ferrules must be purchased for the ends; the heavy steel ferrules are best and are sold by almost all large supply houses. Avoid the thin brass ferrules seen on cheaper tools. To remove the plain appearance of the bright steel, polish and give a case-hardening treatment with color. (See Chapter XVI, Volume II.) This treatment not only gives the ferrules a pleasing color but protects them from the rust caused by perspiring hands or salt air.

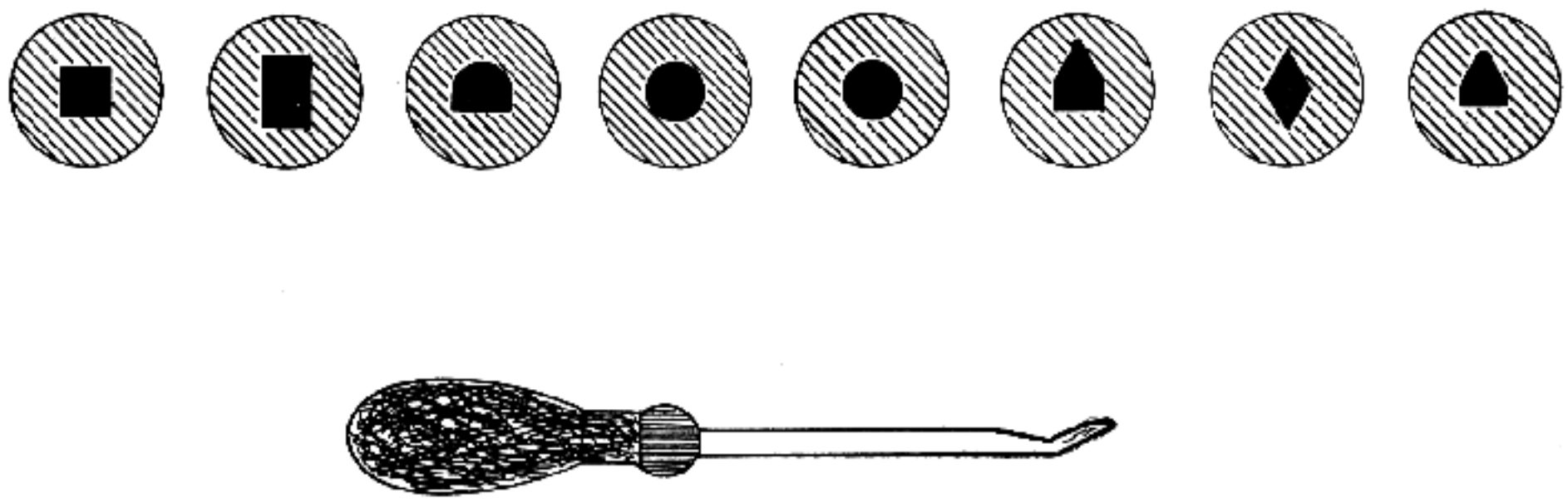

Fig. 28
Bottoming tools

Screw-drivers — These tools are of the greatest importance to the gunmaker, for you can never have a set of drivers too well made; and even if you should make every known size, you will still find a screw slot that the ends will not fit. Figure 21 illustrates these, and a set of three handles of the best design for the gunmaker's use. The steel

used is the finest octagon or hexagon chisel steel, forged, ground, hardened, and tempered. In the same illustration are given the sizes of the brass ferrules used on the end of the handles. After the drivers are driven into the handles, a $\frac{1}{16}$-inch hole is drilled through the ferrule and driver, and a piece of $\frac{1}{16}$-inch drill rod is driven in, riveted over, and filed flush. This illustration also shows the auger-brace drivers which are used to remove screws that cannot be started by the hand screw-driver. Since the points are made close to the body of the steel, there is no spring to them, and when placed in the brace a tremendous amount of turning force can be placed on a screw. This driver will remove the tightest screw.

Most manufactured screw-drivers on the market have a wedge effect on the point. When such a driver is placed in screw slot and any pressure is applied, the wedge part of the point has a tendency to back out of the slot and mar the head of the screw very badly. You will notice that the ends of the drivers illustrated are perfectly straight for some distance. For this reason, when such a point is inserted in a screw slot, the straight sides have perfect bearing surfaces along the two straight sides of the slot; therefore, the point of the driver will break before slipping out of the slot. Because of the straight sides it is only necessary to regrind the end straight across. These should be oil-hardened and the temper drawn to a blue very gradually. The employment of a lead bath for the hardening, and an oil or niter bath for the tempering, produces the best results; and when completed, the end which is inserted into the handle is drawn over a Bunsen burner so that a hole may be drilled for the keeper pin. The hole bored in the end of the handle is of the same diameter as the flat side of the steel, so when the driver is driven into the wood it cuts its form into the hole; therefore, no radius or rounded surface should be given to the end of the driver; only grind off square so it can cut its way through the wood.

Gun Braces — A gun brace or bench horse is a bracket made from a heavy piece of wood which is fastened to the bench and extends over a distance to rest a gun stock on while shaping it. Figure 29 illustrates one which can be made from any scrap hardwood. The height should be made the same as the bottom of the vise jaws, so that when a stock is fastened between the jaws it will be level. The top of the brace should be padded with some soft material such as leather or felt, so that when a finely finished gun stock is rested on its surface

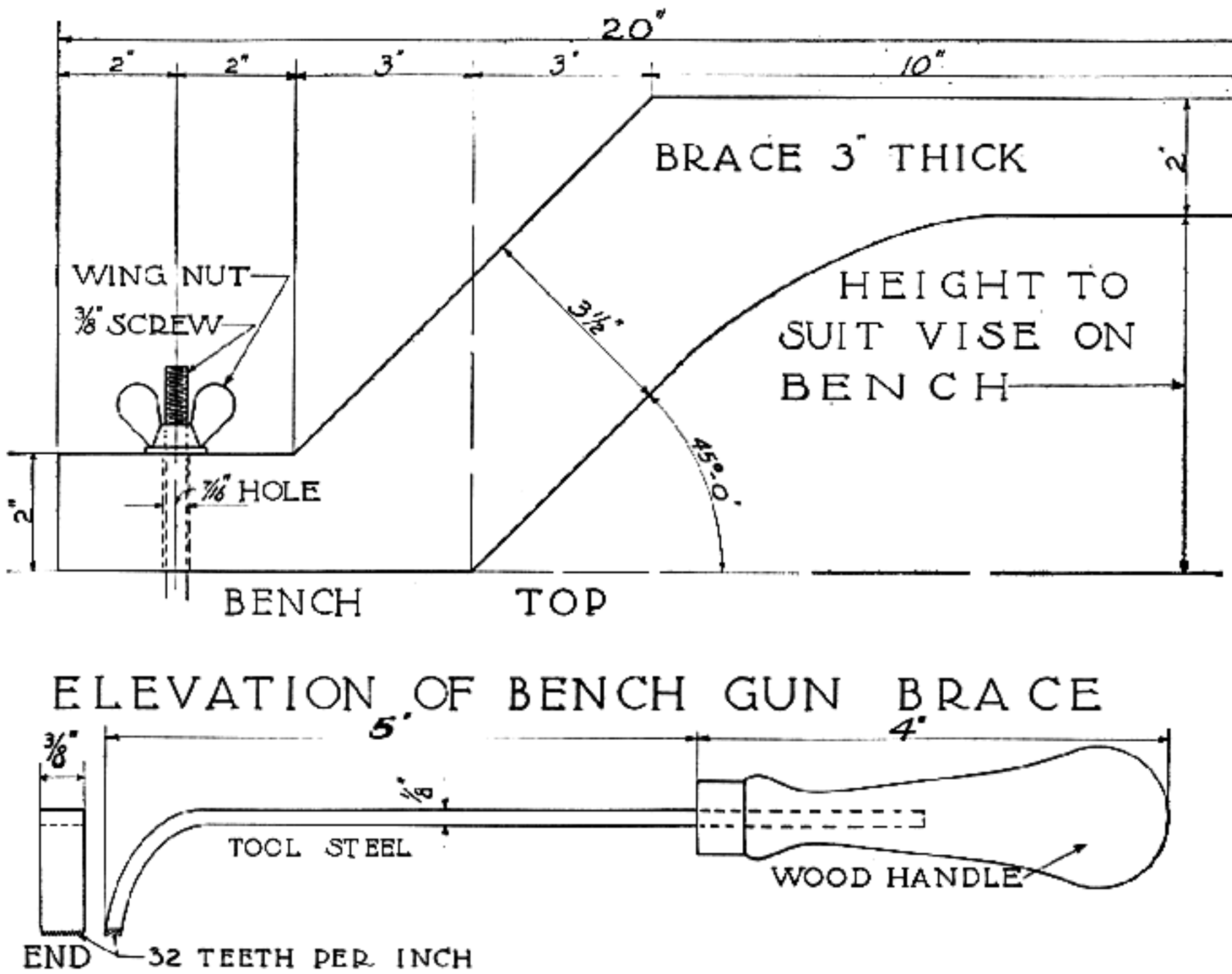

Fig. 29
Bench gun brace, frequently called bench horse. Scoring tool: Used for roughening surface of wood before gluing

there will be no danger of marring its finish. The brace is clamped to the bench with one machine screw and a wing nut so that it is possible to swing the brace in any direction at will. It is often wise to construct two of these braces, one on each side of the vise. If you should make one for the right side of the vise you will soon discover that one is needed on the left side also.

Rifle Holder — Figure 30 illustrates a rifle holder for testing purposes on the range. A device such as this is an essential part of any rifleman's equipment to test and target a rifle in the prone position. The ⅝-inch rod is made from cold drawn steel about three feet long and pointed at the end. The holder is made from a piece of hardwood with a clamping wheel on the side. The wooden block is split so that it is possible to secure a very tight clamping effect on the rod. The rifle form is cut out and a piece of leather glued in place. The form illustrated on the left-hand side of the drawing is placed on the underside of the block, and the form above it goes over the leather to make a perfect union as it is clamped in the vise. If the student does not care to go to all this trouble, one can be made from a piece of 1 x 2 x 4-inch cold drawn steel with the form cut out on a shaper or milling machine, and a piece of leather glued and screwed into place. A 41/64-inch hole is drilled ⅞ inch from the end, and a ⅜ or ¼-inch set screw is used for the clamping member. A 3/16-inch hole is drilled in the head of the screw and a piece of 3/16-inch drill rod two inches long inserted; otherwise a small wrench would have to be carried along. The position of the locking screw on the end of the holder makes it very convenient to reach and make any adjustment with.

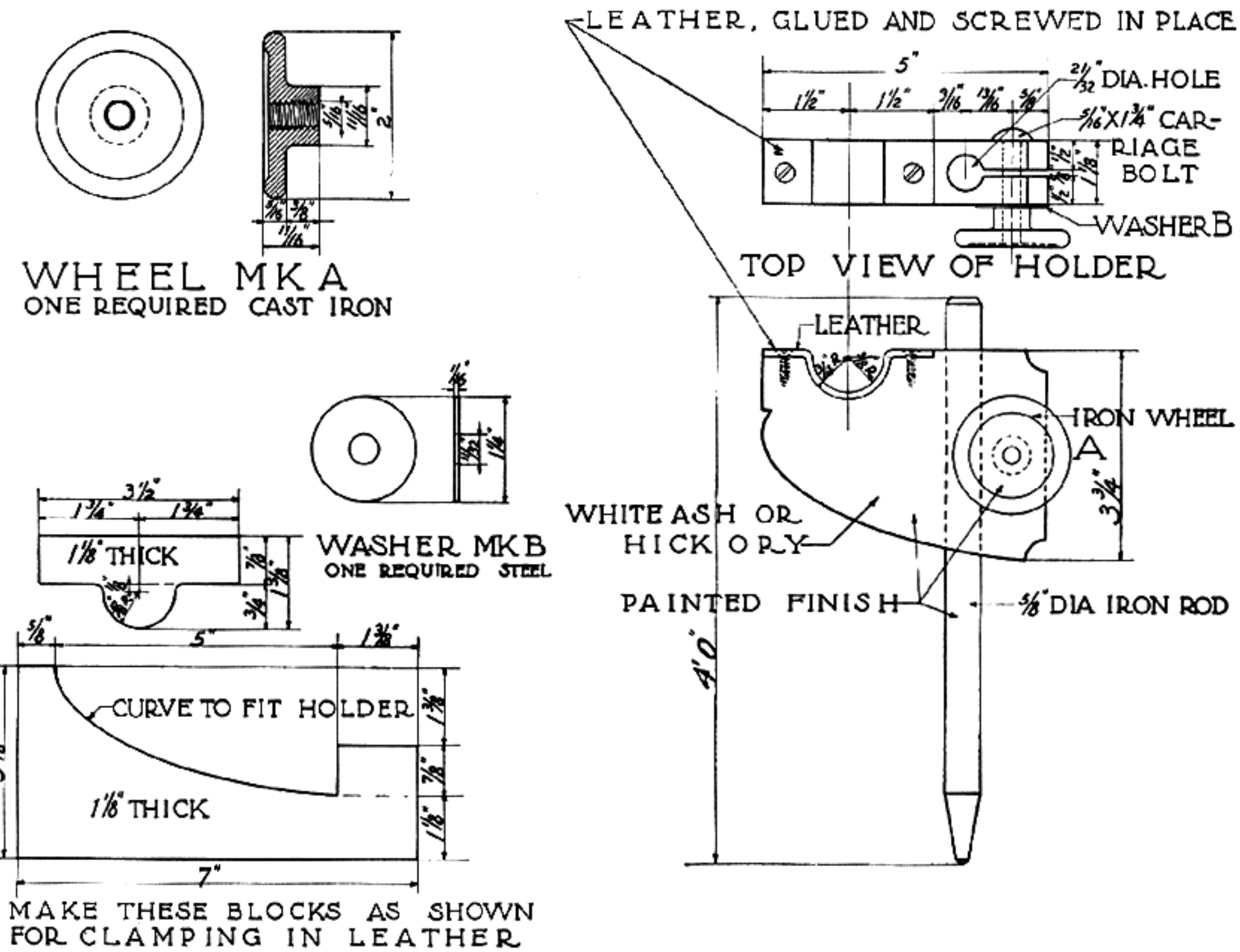

Fig. 30
Rifle holder for testing purposes

Tool Holder — A tool holder to grind flat chisels, plane bits, etc., is illustrated in Figure 31. The simple construction of this holder and the explanation given on the illustration should present no difficulties for the student. It is one of the most essential tools for the amateur, as he cannot

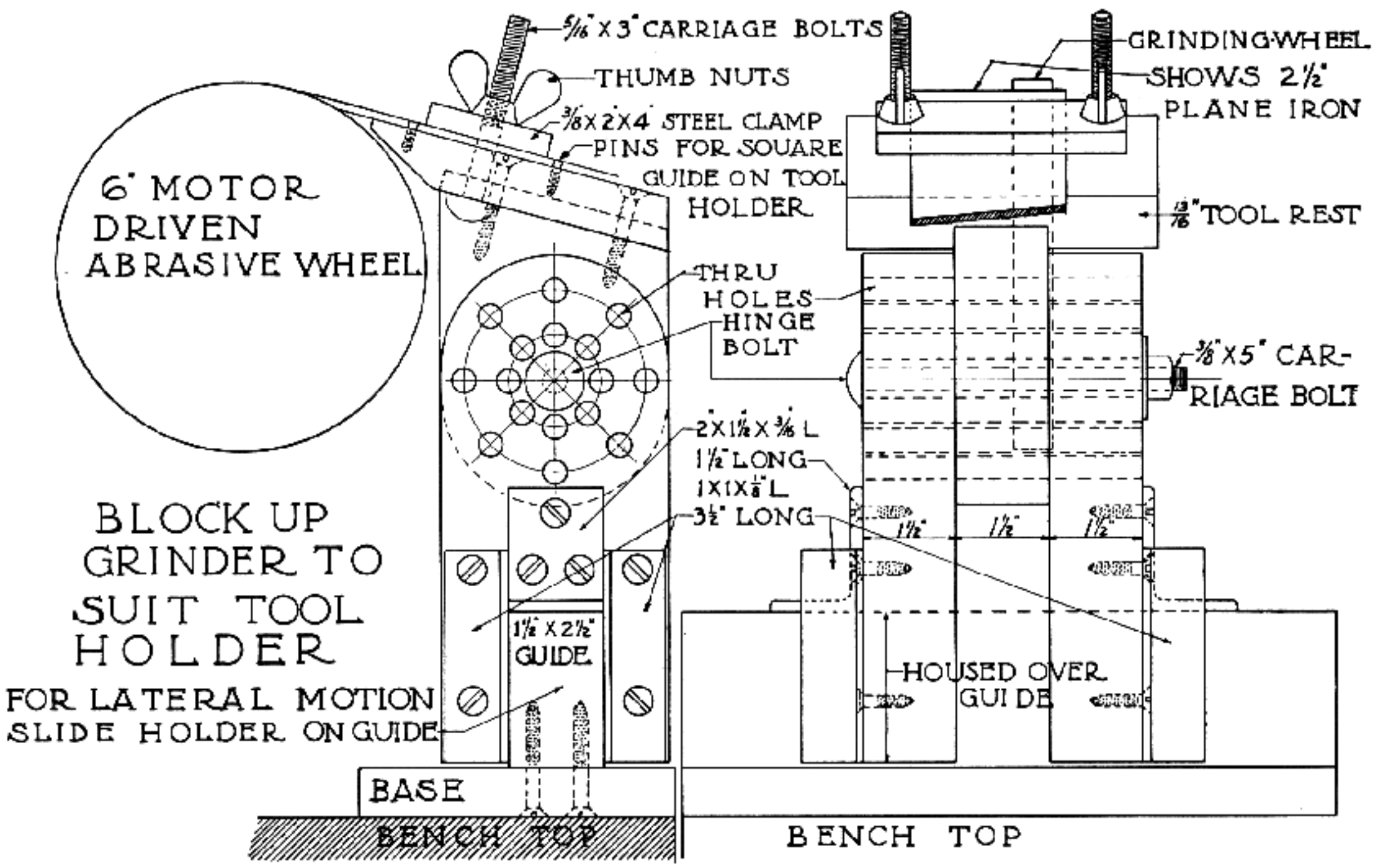

Fig. 31
Home-made tool holder for bench grinder to grind flat chisels, etc.

control the grinding of a chisel on an emery wheel without the aid of some fixture such as this.

Vise Blocks — In answer to the needs of these in the gun shop, a few are made in the different forms shown in Figure 22. Before a stock or finished barrel is clamped in the vise they should be used. The wooden ones shown with felt glued to the face of the blocks are the ones mostly used by a gunmaker. They can be made from any hardwood measuring ½ to ⅞ inch thick with a piece of felt glued to the top surface. A notch is cut out on the bottom which straddles the square box of the movable jaw. The felt glued to the face of the blocks protects the surface and finish of all parts clamped between them.

Lead jaws may also be made, as shown in Figure 22, together with the mold to cast them. There are also false brass and copper jaws for holding small metal parts without marring their surface. Heavy brass or copper bent over the vise jaws is satisfactory for metal work in the jaws of the vise where the faces come together. These surfaces are cut like a file, or knurled, and then tempered. False jaws must be employed, for if the plain knurled surfaces of these jaws are clamped against any work they will necessarily mar and bruise it. Common leather can be glued to these hardened jaws, and even beeswax has been used to retain the leather in place. A satisfactory leather holder is also shown in Figure 22. Two pieces of thin gum wood, the width of the jaws, are used and made much longer than the standard wooden jaws, and two small blocks are used as separators at the bottom. The two outer pieces are nailed or bolted to these, which allows the two ends to spring apart. Thin pieces of leather are glued to the surface, and the spring in the wood keeps them apart. When using these, the spring of the wood follows the vise jaws as they are opened.

Clamps — The gunmaker has so many parts to clamp throughout the various operations he performs that a good supply of clamps is required. Figure 22 illustrates one which is necessary for the restocking of shotguns.

The special home-made tools a student requires are many, but the ingenuity of a mechanical mind

will devise a great number to fit the needs that arise in a small shop. The suggestions made in this chapter are only a means of setting your standard of improvements with what you have at hand.

The student requiring a tool which cannot be procured from the regular source of supply will usually make that particular tool by some method best adapted to his surroundings and by means difficult to suggest in these pages. There are, nevertheless, a number of tools used almost constantly by a gunsmith that a student would never use until he knew the value of such tools and their purposes. I will try to eliminate all unnecessary tools throughout these chapters and mention only the tools or appliances necessary. They can be used to advantage many times, but their uses are for the student to figure out for himself in the particular trade or profession he may be following.

The financial position of the reader may have the greatest influence upon the situation, but the amateur should discard the idea that he should have all that has been suggested. Build your tools as you need them with the means you have at hand, and you will be surprized to see the tools made by the efforts of your own labor.

CHAPTER III

Materials, Metals, and Supplies

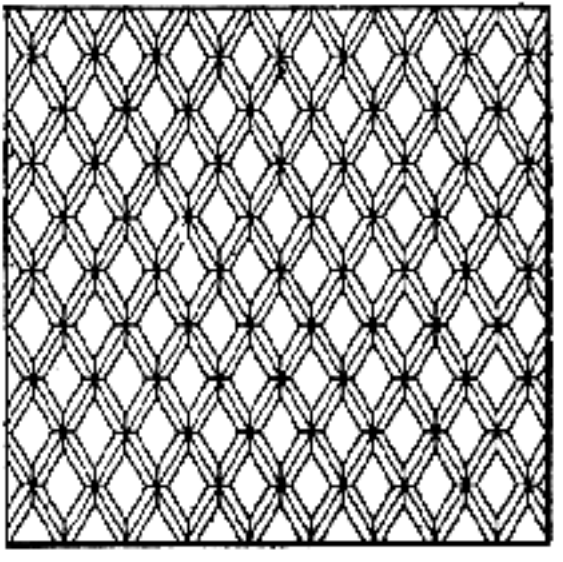

CHAPTER III

Materials, Metals, and Supplies

IN THIS chapter are set down a list of the supplies which comprise a gunmaker's stock in trade. Some of these things are seldom required, some you perhaps will never use, but this book is written especially for the fellow who wants to complete the array, and perhaps has to do everything in the whole range of gunsmithing by himself, and who, moreover, cannot rush out in the lunch hour and easily buy the things he requires or the services he needs for the next evening's work. Then, again, this book aims to inculcate self-reliance, for the fruit of this is the sweetest satisfaction of all. The product of one's own hand and brain becomes, as it were, a part of one's self.

This extended list runs into a lot of money and becomes quite an investment, but you are not going to buy all these things at once, and you will, after all, use your own judgment as to quantity. As your needs develop, you will therefore turn back to this chapter for the extended information you will require. Nothing is so foolish as to purchase things you will never need; so consider the work you are planning to do, and the scope of it, and let your requirements be your guide. There is one axiom, however, that must never be lost sight of, and that is that one cannot make something out of nothing. An enforced makeshift often displays startling ingenuity and earns great credit, but only because it is a triumph over odds and not because it has real excellence. Now, I am sure you do not want your work to be classed as a makeshift, so do not handicap yourself by inferior materials or the lack of suitable ones.

The materials used by the gunmaker are in general specialties, and most of them are not carried in stock by your local storekeeper. You will have to secure them from a variety of sources, and to serve all occasions, I have given in a Directory, a list of merchants and manufacturers who specialize in these goods. Gather and file the catalogs of these and of our leading tool and accessory makers and dealers. You will find much useful information therein, and will be able to determine just what best suits your requirements and your pocket-book.

In gun work the first essential is precision and then more precision, so start out by arranging your supplies in an orderly and precise manner. Have a place for everything and, as far as possible, keep everything in its place. You can make simple racks for your steel, and shelves and cupboards for your smaller items. Empty cigar boxes and empty baking-powder cans are ideal containers for your small articles. Be sure to label them so that you will know without fumbling just where to find what you are seeking. Screw-top glass jars are fine for many small parts.

Let us start by enumerating the metals you will need and the forms in which to buy them.

Tool Steel — Tool steel comes in many different grades and is further complicated by many trade names. It is roughly divided into "Standard Carbon Steel" and the so-called "Alloy Steels." The latter are steels alloyed with other metals. These alloys comprise *Nickel, Chromium, Vanadium, Molybdenum,* etc., or combinations of them. All have their specific uses, and in each case nothing else is quite so good. As we advance into actual work, I shall have something to say about these special steels for particular uses, but when we shall hereafter speak of steel in this book, unless otherwise noted, it will be "Standard Carbon Steel." I shall be rather arbitrary in my choice of steels, not because I have an ax to grind, but because my experience has taught me that certain makes and kinds are best, and you will wisely take my word for it. The work we are going to put on this small fragment of metal is so infinitely more costly than the material itself that to economize at the price of quality would be folly.

Steel, Cold Drawn — This comes in an endless variety of sizes and shapes, in rods, bars, and sheets. Your needs, as they arise, will determine what you will want. The following list of sizes will cover some of the things you will certainly want to make.

Size	*Use*
5/16 inch x 5/8 inch	Front sight ramp, soldered without ring
7/8 inch x 1¼ inch	Front sight ramp, with encircling ring
¼ inch x 3/8 inch	Barrel band bases
½ inch x 5/8 inch	Sling-swivel bases
2 inch x 2 inch	Leaf-sight bases. These are bored barrel diameter and when split make four bases each
¼ inch x 1¼ inch (or 1½ inch)	Quick detachable swivels
22 gauge sheet	Barrel bands
18 or 16 gauge sheet	Butt plates and grip caps

This list could be continued, but it will be better to get the material as needed, for if you should procure sizes on a complete list you would have to open a steel warehouse in connection with your shop.

Steel Drill Rod — Drill rods come in 36 inch lengths, and in sizes from #1 to #80 in drill-gauge dimensions. They are also made in letter and fractional sizes, in squares and in flats. This is very useful material. It makes pins and screws in lock work, firing pins, and cleaning rods, besides endless tools for special purposes. It is invaluable for special reamers, counterbores, checkering tools, matting punches, and screw-drivers.

Spring Steel — The very best spring steels are still made in Great Britain, and for springs of the best shotgun locks it is advisable to obtain this steel. For the ordinary springs you will use in repair work, such as springs for obsolete pistols, muzzle-loading guns, etc., the domestic steel made by Ward or Ryerson will answer the purpose quite well.

Steel Tubing — Shelby steel tubing comes in all required weights and diameters and is particularly useful in many ways. From it you will make barrel bands, foresight protectors, cleaning tubes, bushings, etc. There is also Stainless Steel Tubing, which offers a further advantage for certain purposes we shall mention later.

A special tubing is made by the Ellwood Ivins Tube Works in Philadelphia, Pennsylvania. This company will make any size of tubing from that of a needle up to the largest size, not only in cold-drawn seamless tubing, but tool-steel tubing as well. This tubing is used for the oil tubes of barrel drills, barrel reamers and rifling heads where it is impossible to secure the proper sizes in the standard Shelby tubing. The making of barrels requires more rigid tubing.

A recent use of seamless alloy-steel tubing is for relining rifle barrels. So far these "liners," rifled and ready for insertion, are a means of saving many fine old rifle barrels. As yet these "liners" are exclusively a British product. There are two kinds, those made of ordinary carbon steel and suitable only for lead bullets, and those made of the finest alloy steels and so made suitable for metal-cased bullets. The former, which have the advantage in price, are procurable from A. G. Parker & Company, Birmingham, and the latter from Vickers-Armstrong, Ltd., Grayford, Kent, both in England. They carry a supply of these in various calibers.

Steel Spring Wire — This comes under the name of piano wire and is made in all sizes from #80 to #30. This is the material of which you will make your compression springs. Helical or so-called spiral springs are used in many places in modern firearms, and replacements are often necessary.

Machine Screws — In general use, they are made with two kinds of heads, the flat head and the fillister head. You should have a small stock of both kinds, as these, in addition to their general use, will often replace other special screws which have been lost or broken. The following list covers a multitude of needs. Get them long enough; they can be shortened easily if too long.

Size	*Thread*	*Length*
2	64	¼
2	56	¼
3	56	⅜
3	48	⅜
4	40	⅜
4	36	⅜
5	40	½
6	40	½
6	32	½
8	32	⅝
8	36	⅝
10	32	1
12	28	1

Brass — There are a number of uses for this easily worked metal, both in sheet, rod, and bar. A few pieces of rod of different diameters will make drift punches, riveting anvils, special screws, etc., while for small bushings and escutcheons as well as templets, etc., a sheet of 24-gauge brass will be most desirable. Purchase short pieces of ½-inch, ¾-inch, 1-inch round brass to drive with as well as to hold in the vise to rivet on; also secure the soft sheet brass 1/16 inch thick for use as vise jaws; and obtain ¼-inch and ⅜-inch round brass to drive with and for making special screws, bushings, and escutcheons.

Copper — For drift punches in removing and replacing sights and dovetailed sections, soft copper rod is excellent, and sheet copper 1/16 inch thick makes the best protecting medium for your vise jaws.

Lead — A small quantity of lead will provide for numerous needs, and you will have no difficulty in getting this in scrap form or at your plumbers. Vise jaws, bench plates, etc., require lead. You will also use it for lapping barrels, ring gauges, chambers, and bullets.

Solder — Solder is an alloy of lead and tin in

various proportions. That used by a tinner is usually 50% lead and 50% tin. A slightly higher proportion of tin—say 60 x 40—is better for gun work.

Silver Solder Spelter is used for brazing operations; *tin* and *bismuth* are employed to harden lead and make the soft solders.

Soldering Salts — Nokorode Soldering Salts are the best on the market for soldering operations. These come in pound tins, and all that is necessary is to add a small amount of water to the salts, put the mixture in a separate jar, and keep it handy on the soldering bench.

Emery — You will need a small quantity of emery powder for your lapping and polishing wheels; #90, #120, and the fine grade called "flour" emery will cover your requirements. The coarse grade is used to true oilstones.

Emery Cake — This is emery combined with grease in a soft cake. It is used to charge the revolving polishing wheel. It is a fast-cutting compound and brings out a good finish on steel parts, such as barrels, etc.

Emery Cloth and Paper — This is your standard abrasive, and you will use it a great deal. The numbers most useful in emery cloth are #1, #0, and #000. It is possible to get even finer cuts than these in emery paper, and so your finest use may require a few sheets of Turkish and French emery paper.

Crocus Cloth — This is the finest abrasive of all. You will need it for your finest polishing.

Sandpaper — This universally used material has been greatly improved of late by making it waterproof. The flexibility of the wet paper makes it more adaptable and prevents scratching. It is also self-cleaning and cuts faster. You will not want anything coarser than #1, and for your finest work 1/0 to 7/0.

Fiber — You will need a small amount of round fiber rod, ¼ inch to ¾ inch in diameter, to make into drift punches for use on finished surfaces where even copper would mar and spot. If you do damaskeening this will also be the material you will use as a tool for your abrasive. This material is used by some gunmakers for butt plates and grip caps. It is cheap and easily worked to shape, and for inexpensive work answers quite well. The large round fiber can be turned to various sizes for removing dents on fine shotguns or rifle barrels where adjustable steel plugs would damage the high polish.

Glue — As all glue is soluble in water, its use is quite limited in gun work. The strongest obtainable is made from hide stock, and the best is imported from France or England. As it must be prepared in a double boiler, a small glue pot is necessary. Remember that glue is strong only when freshly made and quickly applied while piping hot, and that boiling and frequent reheating destroys its strength. For attaching horn and rubber we suggest that you dissolve your glue in linseed oil instead of water, as this renders it more nearly water-proof.

Du Pont Household glue will be found very useful and convenient for repairs, and as it does not require heating, it is always ready for use.

Felt — A small supply in ¼ and ½ inch thicknesses is required with which to line vise-jaw blocks and rub down stocks when ground glass, rottenstone, and pumice are used as polishing mediums.

Horn, Buffalo — This is one of the essential materials of the gunmaker. It is used for butt plates, forearm tips, grip caps, and inlays. Asiatic buffalo horn is the best, and it is wise to buy the entire horn and cut it to shape as you need it. Horn butt plates for the best shotgun work should be imported complete, as these are hydraulically compressed into shape. They may be had in all thicknesses wanted.

Pumice and Rottenstone Powders — These substances are very fine abrasives and are used in obtaining a fine polish on stocks. A small can of each will provide enough for unlimited use.

Wood Screws — These are of so great a variety, and so readily obtainable, that one is hardly justified in carrying a stock. Your work-box will furnish most of your needs.

Steel Wool — This is a necessary article. A pound of #000 will serve all purposes for a long time. Its uses will be made manifest throughout these pages.

The following substances and chemicals are also used in gunsmithing, and are chiefly confined to the surface treatment of materials, either to harden their surfaces, to render them more beautiful, or to add to their preservation. The ones first enumerated and described are those for use in connection with metals.

Acids — Acids, one must always remember, require care both in their use and in their storage. They are often dangerous in combination, destructive to animal and vegetable tissues, and highly poisonous. Some must be kept in special containers and away from direct light. Buy in small quantities, as most of them deteriorate rather quickly.

Sulfuric Acid (*commonly called Oil of Vitriol*)— This is a most powerful acid, and, as its name implies, is derived from sulfur and niter. For the gunsmith it is limited to its use as a cleaning agent, such as removing rust, sand, and other foreign substances from metal.

Nitric Acid (*commonly called Aqua Fortis*)— This acid is derived from niter or saltpeter through decomposition by sulfuric acid. It is a most useful acid, both alone and in combination. It is a constituent of all bluing solutions and is the acid which is used in etching ornaments on steel.

Hydrochloric Acid—In its commercial form this is often called *Muriatic Acid* or *Spirits of Salt*. It is made from common salt by the action thereon of sulfuric acid. It is used by the gunsmith as a flux in the operation of soldering and brazing. Hydrochloric acid combined with nitric acid—one part nitric acid with two parts hydrochloric, by measure—makes *Aqua Regia*. This is used as a component of bluing solutions.

Potassium (Potash) — In its numerous forms this is another chemical of many uses. *Potassium Chlorate*, which is the arch enemy lurking in our fired primers, becomes a useful friend in our bluing formulas. *Potassium Bichromate* and *Potassium Cyanid* are the forms in which it is used as a case-hardening agent. *Potassium Permanganate* is a very useful agent in darkening walnut wood. This will be described in stock finishing. *Potassium Nitrate* is used in coloring steel. Other chemicals besides the Potassiums used in bluing solutions are *Bismuth Chlorid, Sulphate of Copper, Sulphate of Iron,* or *Copperas, Bichlorid of Mercury, Ferric Chlorid* and some others of lesser importance.

Ammonia — Commercial ammonia is well known to us all and demands no explanation of its properties or general uses. It is useful to the gunsmith as an agent for the removal of grease preparatory to bluing. *Ammonia Persulphate* mixed with ordinary Ammonia in distilled water makes a valuable cleaning solution, as it will dissolve within the barrel the metal fouling deposited by cupro-nickel-cased bullets. Highly concentrated Ammonia is a most useful agent for darkening walnut and other hardwoods, as only its fumes are necessary. A finished stock, before oils are applied, can be placed in an air-tight box with open dishes of strong ammonia and the dark color will be attained without moisture. *Ammonia Chlorid* (Sal Ammoniac) is used chiefly as a flux in soldering by tinsmiths. For most gun work, Nokorode Soldering Salts are preferable. When shotgun ribs are to be soldered, rosin is the safest flux to use, as no injurious residues are deposited.

Alcohol — Two forms are in common use: grain alcohol which, as its name denotes, is distilled from grain, and wood alcohol which is distilled from wood. For all the formulas I shall give, I advise the exclusive use of grain alcohol. As pure alcohol is surrounded by troublesome government restrictions, I advise that in making up my formulas you take the ingredients to your druggist and have him compound them. He will be able to provide the pure, undenatured alcohol which is essential. If this proves inconvenient you can make your own by procuring a small glass laboratory still.

Acetone — This is an alcohol derivative which is a constituent of most cleaning oils and solutions. Remember, always, that acetone is very inflammable.

Mercury (Quicksilver) — This mineral is used by gunsmiths to remove lead from the rifle bore. It has a great affinity for lead, which unites with it, but from which it can subsequently be easily removed.

Sulfur (Brimstone) — This was one of the bases of our good old black gunpowder, but its use in gunsmithing is largely in the making of casts of shell chambers; it is particularly adaptable because of the low temperature in which it melts and the slight shrinking it develops in cooling. It is also used in the tempering bath when making springs.

Camphor — A small supply is all that is necessary to mix with the sulfur in the making of sulfur casts.

The following substances have largely to do with wood work, and while not chemicals in the strict sense, are best classified with them. Let us take the substances used in staining first:

Alkanet Root — A vegetable derivative, which when mixed with your stock oil will impart a reddish tint to wood. Arnotto, or Annato, an orange red gum. is used to give a similar tint in staining.

This is only soluble in alcohol and therefore cannot be used directly in the polishing oil.

Umber (Raw and Burnt) — A mineral formerly much used as an ingredient in wood stains. It has been superseded by anilins, which are soluble and so penetrate more thoroughly; and they do not obscure the beauty of the grain like insoluble substances.

Dragon's Blood — An old constituent of red wood stains, now superseded by anilins.

Logwood — A very useful dyestuff, but rarely used today in wood stains for the reason above given. It is often used to impart a better black to gun barrels in the bluing process.

We have described the foregoing dyestuffs largely because they are a part of the historic development of staining and will therefore be found in all the old formulas and recipes. My opinion, however, is that the amateur gunsmith will find in the commercial anilin stains, materials more easily obtained, more easily applied, and more easily controlled. The old defect of anilins, their lack of endurance, is now practically overcome. Perhaps of all the old vegetable stains the first one mentioned—Alkanet root—will be the one most generally preferred. Mixed with your stock oil, it will heighten the color of most wood and add to its beauty.

Varnishes and Rubbing Oils — The uses and properties of these substances will be fully described in a later chapter on "Finishing." Here we shall describe them only as substances.

Varnish — All the old varnishes were made of vegetable gums dissolved in linseed oil and turpentine. Only the very toughest and best of these were suitable for gun work. Those known as "Spar Varnishes" are the best, as these resist water most effectually. Valspar is a well-known and worthy representative.

Lacquer — This rather unfortunate word means a number of things, quite different from each other. In the sense in which we employ it here, as a treatment for wood, it is the nitro-cellulose product made by Dupont, called "Duco," and is the best known. Applied with a spray gun it is the modern substitute for varnish in nearly every case. If one has to varnish a gun stock, well—don't; lacquer it instead. It is quicker and in every way better.

Shellac — Shellac is a varnish made from a gum secreted by an insect and dissolved in alcohol. Some gunmakers use it in connection with linseed oil and then it is known as "French Polish." Its use in gun work is passing, the lacquer above mentioned is taking its place.

Linseed Oil — This, the only oil adapted to the preservation and finishing of wood, is derived from flaxseed. It is at its very best when it has been extracted from the seed by pressure only, and without heat. This grade, however, is not generally procurable in America. Linseed oil comes either "raw," as it is called, or "boiled." One must here be reminded that there is "boiled oil," which is oil actually boiled in a vacuum, and the commercial "boiled oil," which is merely raw linseed oil combined with certain "dryers." For the gunsmith the latter is worthless—he must have the really boiled article. As there is a use in gunsmithing for both the raw and the boiled, your supply should include a small bottle of each.

Oils (Lubricating and Preservative) — This is a subject that is provocative of much argument and difference of opinion. There are uncompromising opinions regarding all these classes of oil: animal, mineral, and vegetable, and all their combinations. Perhaps the best line of argument I can take is to give you my preference, and then if you disagree with me, it will be like a conversation on the radio —one-sided. Far be it from me to disparage any of the well-known, highly advertised lubricating oils, as they are excellent for most purposes. It just happens that I "sat in" on long courses of experimentation conducted by the U. S. Government chemists to determine the best oils and greases for use in the Springfield and other United States arsenals. It was found that for the lubrication of guns, an oil consisting of 10 parts pure sperm and 1 part paraffin specially refined, boiled together, was the best obtainable; and that a heavy grease, made under a proprietary formula by E. H. Houghton of Philadelphia and having the trade name of No. 82 and 84 "Cosmic," to 8 parts of which was added 2 of pure sperm, was the very best preservative. Sperm oil is obtained from the head of the sperm whale. Both are entirely free from acid; both are non-drying. This means that they not only do the work required of them, but that they keep on doing it, and your gun, in use or in storage, is safe and sure. This information solved all my oil problems for the moment and, I believe, forever.

Among the other oils needed is *lard oil,* for use in cutting screw threads, and for cutting, reaming, and lapping operations generally. *Kerosene* is used for loosening up corroded joints, and *Sperm Oil* has a number of uses, especially in connection with

rifles—uses which will appear as the workman goes further into actual gunsmithing.

Varnish Remover — Have a small can of this in stock, for it is a great time saver in removing the old varnish from a stock, preparatory to refinishing it.

Beeswax — Beeswax is sometimes used as a polishing agent, but as it is affected by moisture, it is not well adapted for wood work on guns. It is no substitute for the combination of one part linseed oil and ten parts elbow grease. A little, perhaps, added to the oil, accelerates results. It finds a use in the gunmaker's supplies for coating surfaces in the etching process.

Ivory — Since ivory is becoming very rare, it is more expensive than formerly. It is used for pistol-grip caps, forearm tips, inlays and grips for revolvers and pistols, and for special sights on shotguns and rifles. Old billiard balls of ivory may be picked up at times and will supply your needs.

Charcoal — Charcoal, you will need in your furnace as fuel, and also in a powdered form for bluing small parts. That made from willow wood is esteemed the best, but you will be satisfied with that commercially obtained. Charcoal is also used to cover lead in hardening operations.

Lacquers for Metal — These lacquers have no relationship with the automobile lacquers formerly described. Their composition is of no interest to the gunsmith. They may be obtained from dealers in metallic finishes and are applied to metal previously made warm. Their uses will be described in the chapter on metal finishing.

Rouge or Ferric Oxid — This is the finest of all abrasives and is used to give the highest possible polish to steel and other metals.

Prussian Blue — A tube of Prussian blue, procured from your paint dealer, will provide the best material in your trial and error operation in all your close-fitting metal-to-metal work. In fitting steel to wood, lampblack made into a paste with oil is rather more satisfactory.

Bone-black — A pound of this will also be necessary to have at hand. This is used to coat exposed and delicate points when mixed with sperm oil into a paste in the heating and hardening process.

Water — Distilled water should be invariably used in every chemical formula. A *saturated solution* means all, and no more, of any soluble substance that can be held in suspension in the liquid.

Woods — The woods for stocks are best secured from Mitchell Bosley of Birmingham and J. R. Owen of Liverpool, England. They carry the finest of the Circassian, French, and Italian walnuts. For the supply of American walnuts, Harner of Springfield, Ohio, has a very fine selection. It is best to have these cut to standard size for the particular firearms you wish to restock. You will need a supply for odds and ends in order to do considerable patching, and the local supply of American walnut answers that purpose. You will also need pieces of ebony, rosewood, mahogany, cherry, and maple woods. These are very attractive, especially the rare varieties. A separate chapter will be devoted to this subject. See "Selection of Woods" before any steps are taken to secure the supply required.

CHAPTER IV

The Use of Tools

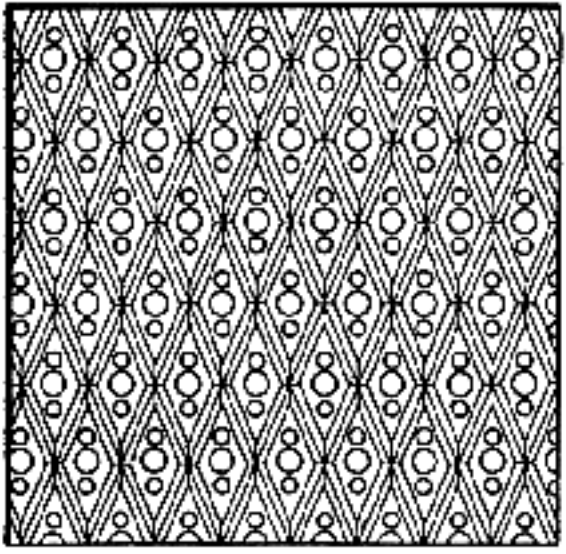

CHAPTER IV

The Use of Tools

CERTAIN individuals seem naturally adept in the use of tools, while others must receive definite instruction before they can make progress. It is for the latter class that this chapter is written. Everyone attempting a task wishes to do it correctly, and the student, having located his shop and purchased or made some of the tools, often finds himself in a quandary, not knowing how to perform the simplest operations, such as sharpening a wood chisel, driving a nail, or using a file in the right manner.

Throughout this chapter I have endeavored to treat each subject so that the novice will clearly understand most of the tools used by a gunsmith. Naturally, a number of topics are not touched upon, but enough is included to give adequate working knowledge. What follows may be of little use to the finished craftsman, but the beginner should read it carefully in the hope of acquiring an understanding that could otherwise be had only by apprenticeship.

Wood-working tools will be considered first because of their interest to the beginner. Edge tools of all kinds come ground, but not stoned, therefore it is necessary to understand first how to sharpen and keep them in condition to do the best work.

WOOD-WORKING TOOLS

Chisels — The wood chisel, carving chisel, gouge, and bottoming tool are the most important in stock inletting. You can buy chisels such as the short butt chisels which save time, and you can also fashion them from old files. Grind off the file cuts, being careful not to draw the temper while doing so, and sharpen the end by holding it flat against the emery wheel as it revolves to secure the proper angle. On all gunmakers' chisels the angle is twice as great as on carpenter chisels. With a long sharp angle, the cutting edge performs better on hard woods. The grinding of a radius on the cutting edge of a chisel reduces to a minimum the necessity for stoning. It is advisable to grind a 1 or 2 degree angle on the flat side so that it will not bite in that direction, but take out a straight clean cut. It is impossible to do this with gouges, since they are made with a diversity of radii and a very steep angle to the cutting edge, with only a very slight angle on the flat side.

Carving chisels come under the same heading as gouges and are made in many different forms. The reversed radius gouges are seldom used on stock work and may be added to one's kit when occasion for their use arises.

The chisels you buy usually come rough-ground and with a short angle. Regrind this angle as described, near to the cutting edge; then reverse the same on the emery wheel so that a short radius will be ground about one sixty-fourth to the cutting edge. While grinding, always be careful to grind straight across so that the cutting edge will not be canted to one side. Like instructions should be followed for chisels made from old worn files. As machine shops are always accumulating old files, a good supply can usually be obtained without much effort. Your choice should be: flat mill, half round, three square, and pillar files. Those of the narrow pillar variety can be made into small narrow chisels, and the different-shaped needle files can be ground for small inletting work such as shields, etc. Your needs will be confined mostly to 6 and 8 inch lengths, the 10 and 12 inch being rather cumbersome for general use. The 10 inch mill file may be broken in half and ground for wide butt chisels.

Another type of thin chisel is made from power hack-saw blades, broken to the proper length, the teeth ground off, and a tang ground on the end to fit a file handle. A full set of these tools is inexpensive, not difficult in construction, and the work will be most interesting to the beginner.

In stoning, first use a coarse carborundum stone to hasten the work on the cutting edge, and a Washita or any fine-grained stone to obtain the desired keenness. Get a piece of 3 inch belt leather, 12 inches in length, and glue the smooth side to a convenient place on the bench; use it to rub the working chisel on now and then as needed. Charge the leather with 320-M optical emery by mixing it into a paste with olive oil, and rub well into the leather. By drawing your chisels toward you, as tho you were stropping a razor, you reestablish and maintain the sharp cutting edge. This device is used for flat chisels and gouges on the straight side. Most carving chisels have odd shapes and radii but

you will observe that the gouges have, in most instances, a true radius. To strop these, the best results are obtained with a buffing wheel mounted either on a buffing-wheel stand or emery-wheel spindle. Charge the wheel with rouge or chrome-plating polish as a light abrasive. When the tool is stoned and you wish to complete the stropping operation, all that is necessary is to hold gouge or carving chisel against the fast-revolving wheel at an angle of 80 to 85 degrees from the horizontal; or hold the tool near the bottom of the wheel to secure the proper edge. Only one thickness of a ¼ inch sewn muslin wheel is required to bring the edge to a fine cutting design.

When using the buffing wheel, hold the tool close to a vertical position, bringing it against the wheel gently. This method will give it a razor edge, the condition in which it should be kept. It is wise, at the first sign of dulness, to touch it up on the wheel, thus returning to the razor edge the possibility of making a smooth polished cut against the grain of the wood.

When making chisels from old files and after grinding, draw to a blue just verging on purple. Procure suitable handles with heavy steel ferrules for protection in the use of a mallet. Generally speaking, chisels used in conjunction with a mallet are of the ordinary carpenter kind, reground, while home-made thin chisels are for hand use only.

Only rudimentary instruction can be imparted to the beginner in the use of the different chisels, since proficiency will depend largely on practise and experience. In the use of the many forms of hand chisels, the hold varies slightly, but speaking generally, the right hand is the pushing force and the left acts as the guide. If you are the least bit artistic you will find it gratifying to watch your ability grow, particularly in the application of the small carving chisels. In fitting actions into stocks, the wide short-butt chisels will be found the best, for with these you can take off the thinnest shaving cleanly.

Draw-Knife — Most of us are familiar with this tool, but very few understand its proper use in shaping a stock. Strange but true, the American stock maker uses it far less frequently than the spoke-shave; a matter of fashion and teaching, I suppose. When it is razor keen, it is a reliable and thoroughly efficient tool. Instead of taking the long strokes you see a carpenter use, hold the knife at an angle or let the left hand extend further than the right and only take off small chips with a kind of motion as tho you would gouge out the wood with each stroke, cutting across and at times against the grain without splitting the wood. Of course, on straight-grained blanks you can take longer strokes, thereby reducing the surplus wood more rapidly. Do not go too far in your cuts, and bear in mind that the spoke-shave is used to continue where the draw-knife leaves off.

One of the best instruments of this kind is the wheelwright draw-knife with round handles close to the blade. With such a knife the cuts are controlled better, whether from or toward you.

Planes — When the student begins to use a plane he holds it at an angle instead of pushing it in a straight line, and you will find that a great many carpenters do the same thing. Turning the tool sidewise permits it to follow an uneven surface and your work becomes more or less out of square. Holding the plane straight is highly important in laying out the top lines of a stock correctly; and for this it is advisable to use a jack-plane.

When starting to plane, use the lightest cuts possible, the blade scarcely scraping the wood. Then set the cutter just a little deeper, until thin transparent shavings are produced the full width of the blade. When you find that you are cutting against the grain, reverse the piece of work and plane from the opposite end. Should the grain run in different directions, take only the finest cuts possible to avoid fraying and tearing the fibers.

In the use of the smooth plane to clean up a rough piece of wood, it is permissible to turn the plane at any angle to cut the high points off the work; follow, however, by straight cuts to attain the desired level surface from which the remaining sides are trued.

When first examining a new plane you will find that the blade is rough-ground only; it is therefore necessary to stone it to secure the proper results. Have a combination coarse and fine oilstone located at one end of the work-bench recessed in a wooden block, so that it is stationary and can be reversed from fine to coarse. To stone the blade, turn the smooth side up. Apply a few drops of sperm oil on the center of the stone. Hold the plane blade with both hands with top of angle resting on the stone. Slowly bring the cutting edge to the stone, and move the blade in a circular motion without too much pressure. Examine often to see that you have a straight line along the cutting edge of the blade. This will be indicated by a bright edge. Now reverse the blade, lay the flat side down, and draw it back and forth until the bright stoned edge also shows in a straight line as on the opposite side. Now start stoning lengthwise on the angle to remove the wire edge, reverse and do likewise until all of it has disappeared. Use the lily-white Washita oilstone; stone the blade in the

same manner as last described, and when you run it across the top of your finger-nail you will note the sign of a saw edge. If you examine this rough edge under a magnifying glass it will look like a number of fine saw teeth which are easily detected with the top of the finger-nail. After these are removed by the white Washita or Arkansas stone, strop the edge on the belt leather as described for wood chisels until you are able to cut a hair with it quite as readily as with a razor after being stropped. This procedure applies to all plane blades, but, of course, the angles differ in certain types, necessitating slight changes in position when stoning.

When assembling the plane, note the amount of projection of the blade through the slot. If too high on one side and low on the opposite, it can be adjusted by means of a lever under the blade on top side which shifts the position until it becomes perfectly even. The adjusting screw regulates the thickness of the cut, which can be adjusted to produce the thinnest of shavings.

Rasps — These are manipulated in the same manner as files, are extremely useful, have a broad field, are quite simple to work with, and are the beginner's most important tools. Even tho you are able to remove wood easily with such a tool, you must bear in mind that it is possible, at least for some workmen, to do much better work with other tools when a more advanced stage of adeptness is arrived at.

Rasps come in different sizes and cuts and are known as rasp, cabinet, and vixen. The two mostly used in stock work are the rasp and the cabinet. The cabinet rasps are thinner with very little radius on the curved side. The rasp is used only on wood where it is impossible to use any other tool to cut down to shape, such as in a butt stock that has been cut from the stump and where the knots and burls stand out prominently. It is surprizing how rapidly the beginner becomes proficient with these implements; and he will accomplish better results, by far, when he uses them on such wood as curly maple, stump walnut, etc. When you get down to the outlines of the stock, finish with a bastard and a mill-cut file before sanding. Good rasps are rather expensive and it doesn't take long to wear one out on hard wood. When the teeth become dull it is better to discard it altogether, for you will require fifty strokes with a worn rasp to one stroke with a new one. When you want exercise to develop muscle in your shoulders and arms, a worn file or rasp will accomplish the desired effect. A vixen file is used on aluminum and for barrel striking.

Saws — The saws which gunsmiths use are a good crosscut, rip, hack, coping, jeweler's hack, and small cabinet. The first two are used for all the rough sawing required, and when used with care will last a long time without any sharpening. Of course if you allow it to hit your vise, or saw into nails, it doesn't take long to dull the teeth. If this happens often, it is best to learn how to file a saw, for which a special vise is convenient. To do this, clamp the saw in the vise, and with a triangular saw-file start to file the first tooth at the same angle as the original cut. Hold the angle, and file every other tooth until they come up to very sharp points. Reverse the saw in the vise and file the opposite tooth from the other side. Before starting to file, take a straight edge and lay over the teeth. If they do not come up even, take a 12-inch mill file and just touch the tops of the teeth until all are even.

It is difficult to give instructions for the use of a wood saw, for the control of a saw is only developed by practise, and it is well for the beginner to use test pieces to see how straight he can keep to a line with both saws, one for cross-cutting the grain of the wood and the rip-saw to cut with the grain.

You will find that the hack-saw is the most useful of all, since it is adapted to both metal and wood. The Atkins silver-steel blades, I believe, are best. The length of blade should be 12 inches with 24 or 32 teeth to the inch. The coarse teeth are used when cutting steel and wood of large size, and the fine teeth for light work, small stock, and sheet metal. When a blade wears down you can grind off the sides of the teeth and use it to slot screw-heads, etc.

The jeweler's hack-saw is used extensively by the gunsmith, and as the blades cost only ten cents per dozen it is a good investment to buy five or six dozen in different widths and numbers of teeth. This saw is used for cutting off small parts, cutting screw-driver slots in small screws, etc.; it is impossible to list here the multiplicity of its uses. In practise many blades are unavoidably broken; however, knowledge of the use of the tool is so desirable that this should not lend discouragement.

The coping saw is used for cutting out odd forms in wood and templet work when it is necessary to follow lines. This is more readily possible because the blade can be turned to any position in the frame. For cutting out pistol-grip caps from buffalo horn and ivory, it is indispensable.

Spoke-shave — This is one of the wood-working tools the amateur should by all means become accustomed to, especially in shaping the outlines of

a stock. It is one of the easiest devices to understand when you once see the advantage gained in its use. Without a doubt, its employment is becoming more or less obsolete among American workmen; but European gunmakers usually have a complete collection in perfect order in their tool chests, and prize them highly. You will be startled to see how rapidly you can remove wood with one of these little tools, working the shave both from and toward you, the same as with a draw-knife.

When grinding the blade it is necessary to have a convex form up to the cutting edge on the part which projects from the wooden handle. On the under side of the knife, it needs a long angle to free the chips. After stoning the cutter to a keen edge, place it against the muslin wheel charged with rouge as explained in finishing gouges or chisels with odd forms. It should be set, usually, for the shallowest of cuts.

I use various spoke-shaves on stock work, from the very smallest for odd forms on shotgun stocks to the regular size which is used for roughing down wherever possible. With one of these little tools you can see what you are doing when shaping a stock blank, but with a cabinet rasp, an uneven surface results which makes it difficult to keep in mind the outline of your work. On difficult wood it is advisable to resort to one of the rasps, for here it is next to impossible to use a shave because of knots and diversity of grain.

Wood Bits — These are essentially for boring into wood, but other forms are also employed. The wood bit is frequently used in gun work, and it is advisable to buy the very best, for the hard wood of gun stocks dulls its quickly. Look over an assortment of needle files and select a suitable one to keep your bit sharp. File from the inside; sharpening the side lip from the outside will cause it to bind in the hole and pull the spur free from the wood.

Center bits are used to start the Forstner bits when shallow holes are required, the Forstner bits being used in producing a flat-bottom hole. As these are only used on shotgun stocks you will find that they do not require sharpening as often as the auger bits. However, identical methods are employed when it is needed.

In selecting a brace, choose the best with a large strong chuck that runs true, and has a sweep of between 10 and 12 inches. When a bit is centered there should be no running out. Occasionally it is the bit itself which is being sprung, and it is impossible to bore a straight hole with one so modified, especially when recessing in the butt for accessories, as these holes are bored the full length of the bit. You must have the combination of bit and brace running in absolute alinement. To have a bit come through the side of a finished stock is a calamity and humiliation great enough to make one realize that it is advisable to have everything running true from the very first. Before starting operations which require the use of either auger, center or Forstner bit, lay out your work by marking the centers plainly with a center punch. There is no excuse for holes being out of center. When this happens it is due to guess-work or haste.

In the instance of twist drills used in a brace, grind the drills back longer than in the case of steel. Drills any smaller than ¼ inch should be used in a hand drill.

METAL-WORKING TOOLS

Drills and Drilling — In the armamentorium of the metal worker's tools, none has a more definite or important place than the twist drill. One-half the metal is cut away in the flutes, but notwithstanding this, the cutting surface, in proportion to its cross-sectional area, is large. This is made possible by the fact that the walls through which it passes act as a support, and the feed pressure forces the point into a cone-shaped hole which centers it. Drills should be ground so as to cut to actual diameter and be capable of operation with as little power or pressure as possible. To have one cut to correct size, both lips should be of the same angle. A great convenience is to buy a standard drill gauge (shown in Figure 32). These are

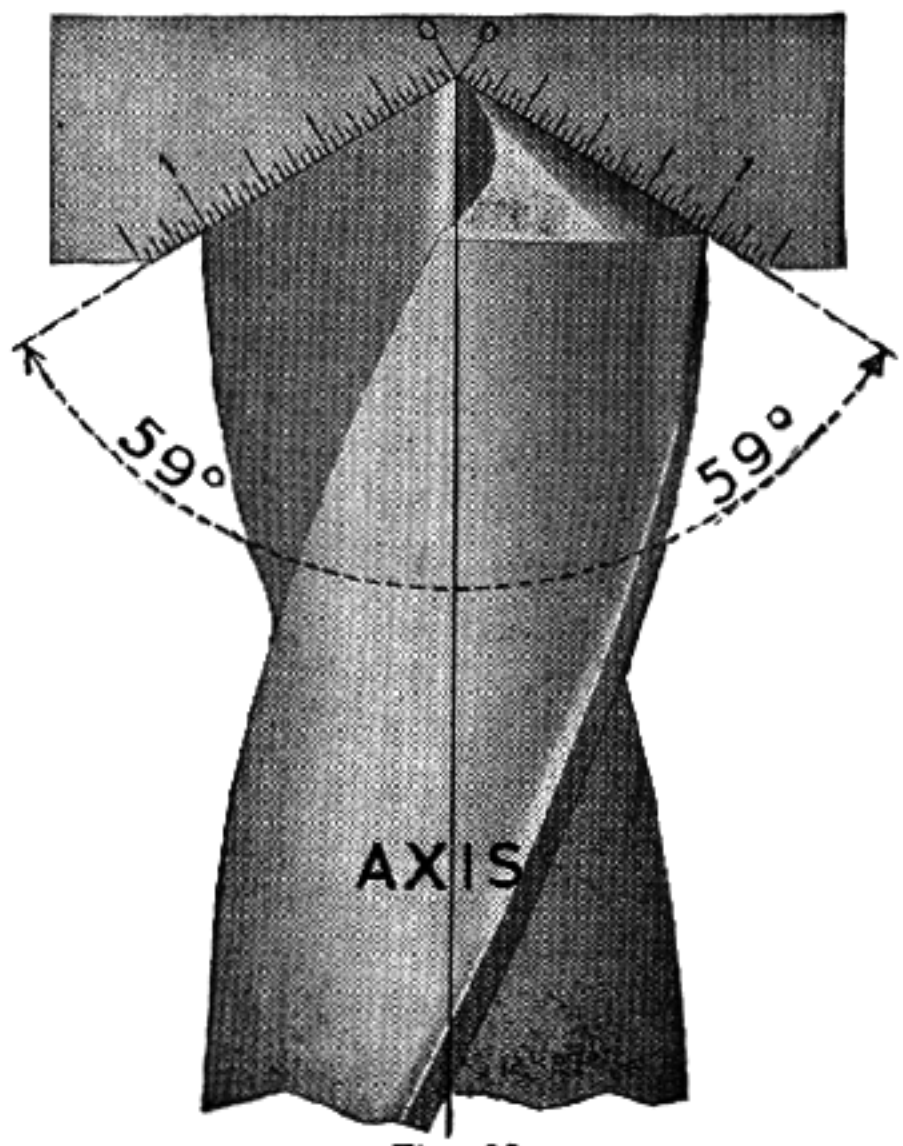

Fig. 32
Correctly ground lips. The two lips are of the same length and the same angle to the axis

made from sheet steel with an angle of 59 degrees and graduated on the angle portion, so that when the drill is reversed, both sides check to the center. After acquiring the knack of grinding them it is no more difficult to grind a Number 52 than a 2-inch, and the same holds true for giving correct relief. Start from the cutting edge and roll it back; then reverse the drill to opposite side and repeat the operation. This does not assure microscopically perfect size, but the accuracy of the eyes is sufficient for all practical purposes here to determine if both angles are correct, and sides are of equal length. Should one side be longer than the other, the drill will cut oversize, and in the case of a large drill the aperture would be enlarged considerably. Small-number drills are stoned; they are too small to be ground. By stoning a small radius on the edge or lip of any size drill, it may be used as a reamer by drilling first with a smaller drill, and then using the one so treated until the desired smooth opening is acquired.

For drilling brass or any thin stock where the drill goes clear through, it is best to grind or stone a narrow bevel on the cutting edge. Figure 33 illustrates the edge to stone. This does away with the tendency to draw into the work, which means removing more than it should, especially at the bottom of the opening where it breaks through. To avoid this, grind as heretofore explained—from the cutting edge.

Fig. 33
Special grinding for hard metal or brass

Drilling Holes in Glass—A number of methods are offered for choice. For holes of medium and large sizes, use either brass or Shelby tubing having a diameter equal to that of the opening required, as illustrated in Figure 34, or make up special drills from cold-drawn steel. The cutting face in each instance should have a smooth, flat, circular surface. The speed should be about 100 feet per minute, or just fast enough to have the

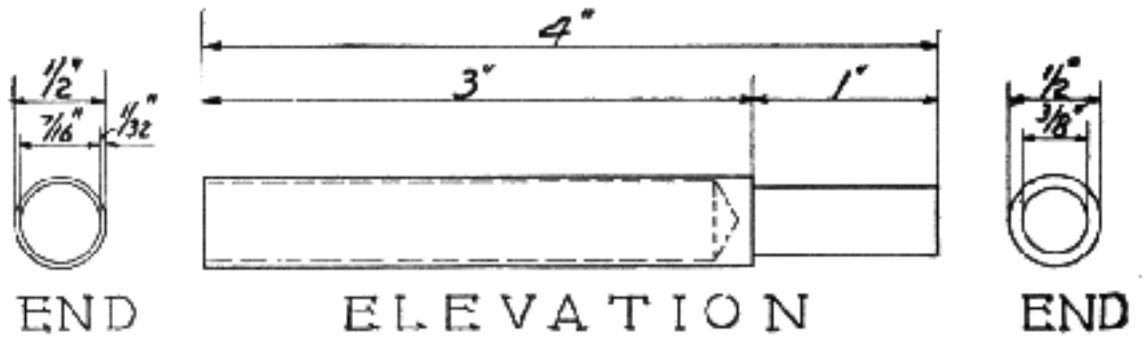

Fig. 34
Glass drill

emery cut well. Use either 90 or 100 emery or carborundum and water between the end of the drill, tubing, and glass. Place the abrasive under the drill with a thin piece of soft wood to avoid scratching the surrounding glass. Construct a wooden box so that the grit-impregnated water will not run over the drill-press table or floor. Cushion the glass with a piece of rubber with an opening in the center not larger than the one to be drilled. When drilling, it is best to penetrate approximately half-way and then turn the glass and drill from the opposite direction. Any fin left in the hole can be easily removed with a round file dipped in turpentine. It is possible to drill small holes by grinding the triangular end of a three-cornered file to a taper, and using it as a drill tool. For a lubricant, use a mixture of turpentine and camphor. Holes up to ½ inch in diameter can be drilled in glass with a flat drill by hardening it in sulfurous acid, and using a mixture of turpentine and camphor as a lubricant. The most successful glass drilling is accomplished with such implements as are shown in Figure 34.

Drill Troubles—Twist drills will stand more in proportion to their size and weight than almost any other tools, and when a good one does give trouble it is due to neglect. When drills chip on the edge, the lip clearance is too great and fails to support the cutting edge. If the outer corner wears, it shows that the speed is too great. Figure 35

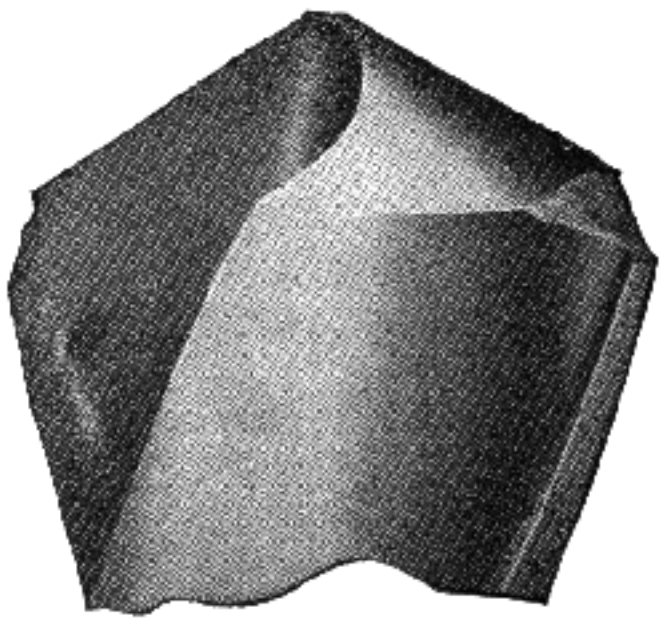

Fig. 35
An indication of too great speed: The outer corners of the drill have been worn away because excessive speed has drawn the temper

shows this defect. This is particularly noticeable on cast iron. Always keep drills sharp and watch the speeds and feeds, and above all keep them well lubricated with a free cutting oil, such as lard

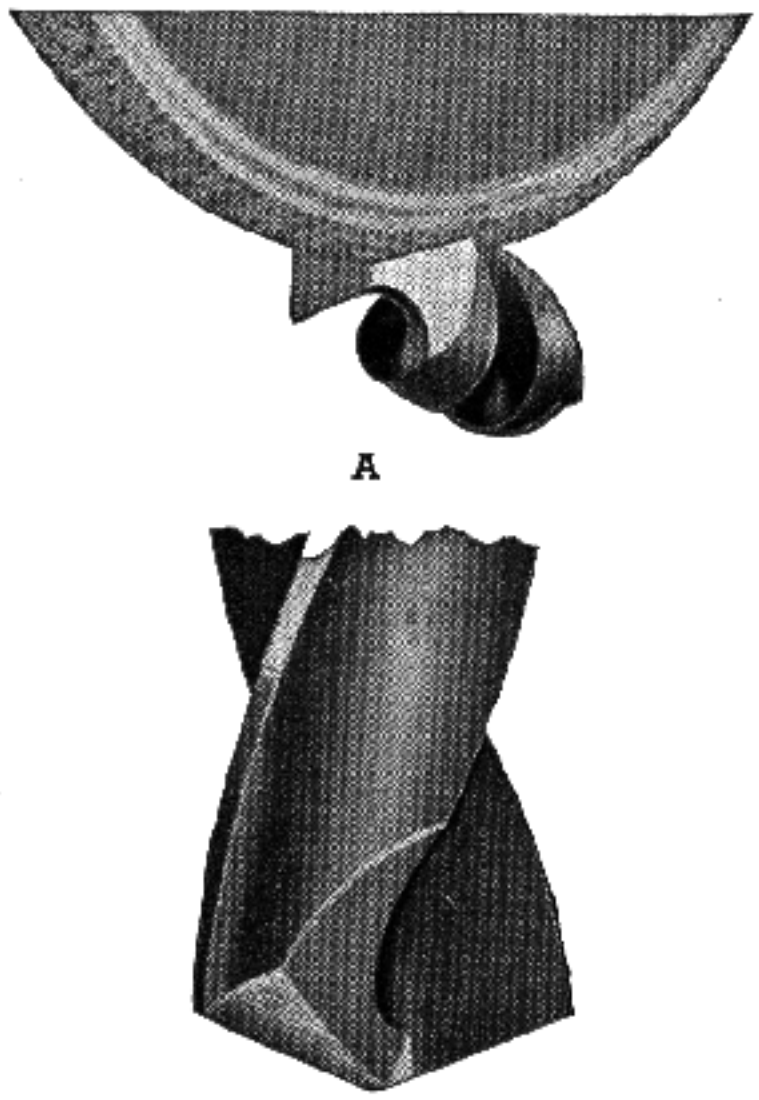

A

B

Fig. 36
(A) Thinning the web of a drill on an emery wheel. (B) Showing where the wheel has removed the metal

oil. When using small drills at high speed, a wonderful help is to moisten them with the index finger dipped in oil. In drilling hard material use turpentine as a lubricant. Drills feed more easily by carefully thinning the extreme point. Figure 36 illustrates this. This is important in hand feeding with drills at or over $\frac{5}{16}$ in diameter.

When metal has been case-hardened or tempered, it is best to spot-anneal by building wet clay around the spot that is to be drilled, and heating over the Bunsen burner. Or spot-anneal with an acetylene torch; or a spot can be ground off so that the drill will start. In drilling material of this texture, grind the tool as flat as possible; it will cut much better on all hardened parts, using a low speed and turpentine as the lubricant.

Often a drill can be used in place of the regular tool for counterbores. Start the opening with a regulation-ground drill and then replace with one of the same size, but ground flat and with just

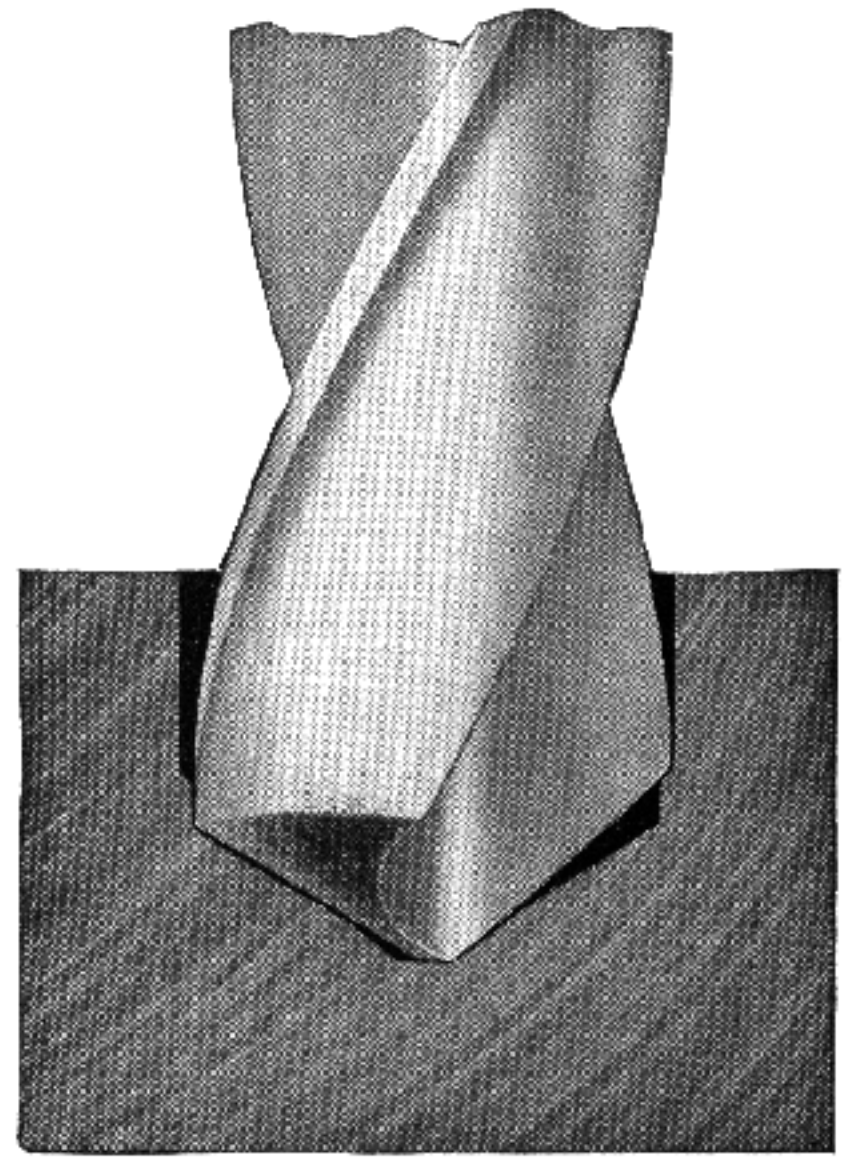

Fig. 38
Incorrectly ground lips. Here we see the angles of lips to be equal, but their lengths are different

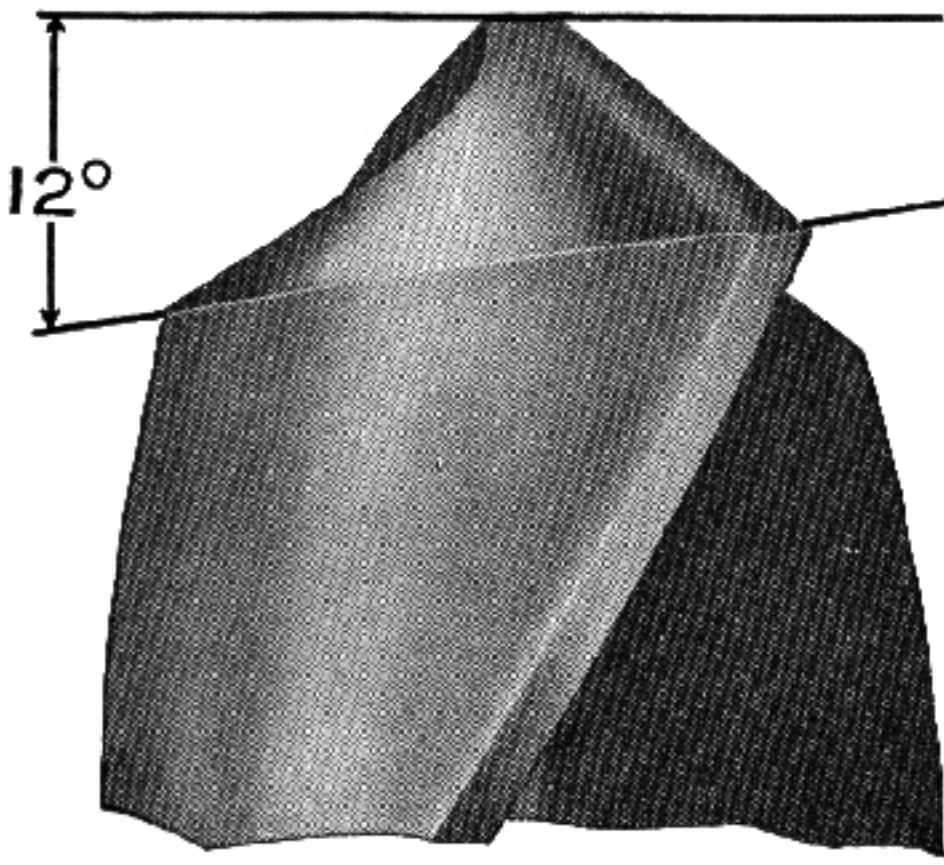

Fig. 37
Correct lip clearance, showing proper way to grind the surface back of the cutting lip

enough clearance to insure its cutting. These we call "bottoming drills"; they will do for holes where special care is necessary.

When using metal-cutting drills for wood, increase the angle to 30 degrees on a side and give the drill a considerable amount of clearance so the chips will come out freely and not act as a brake. High-speed drills cost a little more than carbon drills and are the ones used mostly in gun work. For wood, the common carbon drills do very nicely, but for steel the former will outlast a carbon drill two to one.

The Drill Press and Its Use—Many operations can be performed on this machine, such as using it for inlay work on wood, as a milling machine to cut out grooves in shotgun hammers, to set sights in revolvers, grooves in sight bases for covers, to mor-

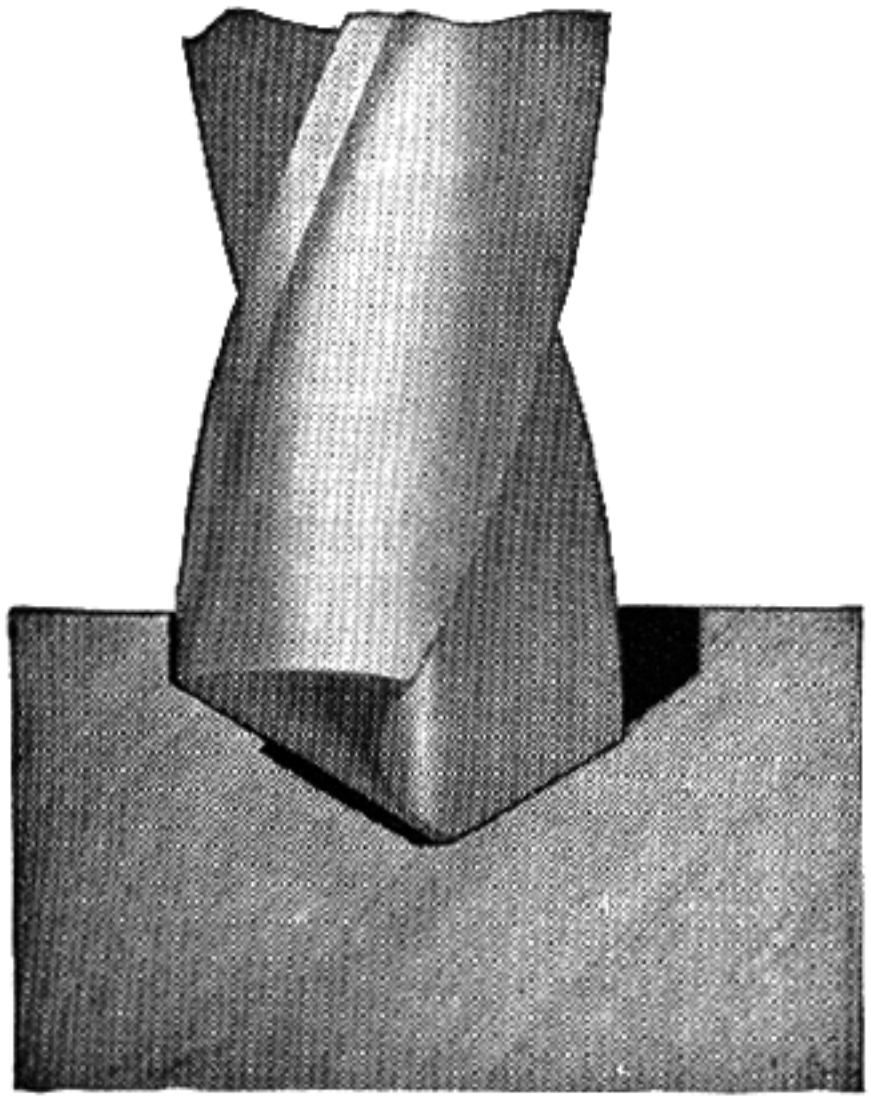

Fig. 39
Incorrectly ground lips. When this drill was ground the two lips were different. Note that the hole is larger than the drill

tise long grooves, as in checkering frames, square wooden sections, etc.

A surprizing number of different set-ups can be arranged on one of these machines, from the drilling of holes in steel or wood to using it for special cut-outs. As an instance, suppose you wish to set in a piece of ebony or ivory. It is difficult to ex-

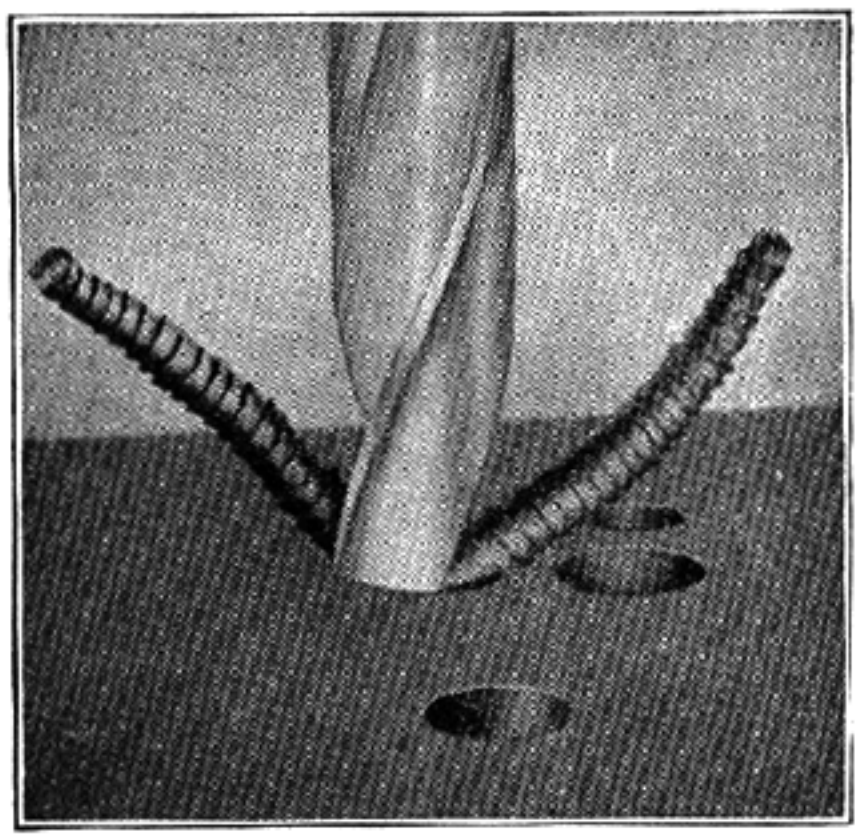

Fig. 40
The correctly ground drill. Note how compactly these chips fit into each other

cavate for this by hand. When it is possible to do this with the aid of the drill press, a small fishtail cutter can be formed out of a piece of drill rod. File it to the required size, and harden and temper. This cutter should be small and driven at high speed. Set the piece in the drill-press vise and place a block of wood so the back of the vise will ride squarely against it. Place stops for the required lengths, setting them on the feed handle so as to require only slight pressure to bring the cutter a mite deeper. A light outlining cut results in a milled-out recess for the inlay. For mortising, buy

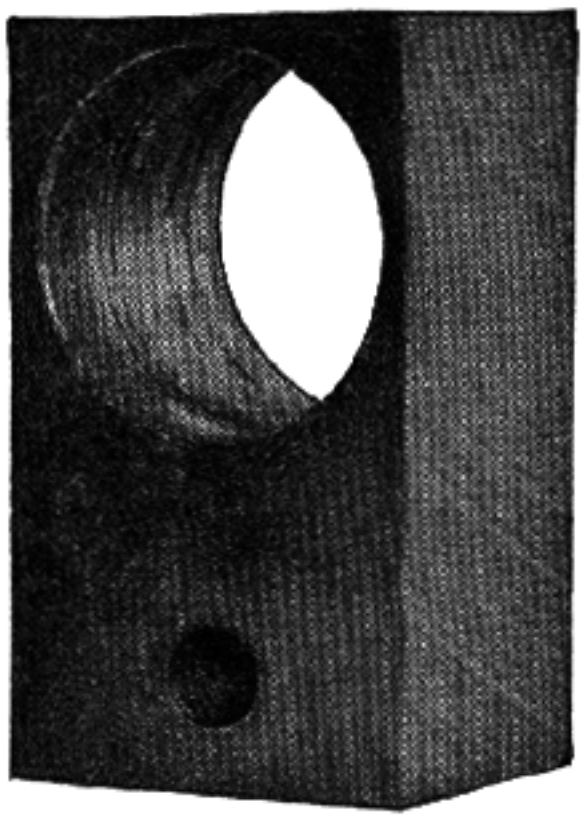

Fig. 41
A rough, inaccurate hole—the result of a dull drill or worn outer edges

spiral end mills up to ½ inch; these can also be used for surfacing wood work. They produce a well-finished surface and all that is afterwards necessary is to sand and polish. A drill press can also be used for lapping, filing, and polishing screws. For reason of its innumerable uses it pays to add such a machine to your shop equipment. If it is not practical to buy a regularly made drill press, secure a smaller one which with motor attachment may be made to answer the purpose satisfactorily.

Files and Filing — The file plays a most important part in the gunsmith's trade as well as that of die makers, and it would be difficult to conceive of a piece of work in the construction of which it does not find its use. Proficiency in the file's use demands practise, accuracy, and patience. While employed as a die maker, it took me two weeks to file out one die block which made two tumblers. In the hands of the craftsman it marks a degree of skill that never fails to impress. In general practise files are designed both by the spacing of their teeth and the shape and cross-section of steel on which they are cut. The size always refers to their length, which is measured from the point or end of the file proper and never includes the tang that fits into the handle.

Terms Used for Files—The back of the file is

the convex or rounded or half-round side. Cabinet and other files have similar sides. The second cut is finer than the first. Some prefer the single-cut for filing in lathes, and I am of the opinion that the best results are secured with this style when draw-filing a barrel or similar work.

Careful observers will notice that a file does not cut well when new, but rather that it is at its best after it has been used for a while, and that its proficiency terminates suddenly, not gradually. Gunmakers of past generations accomplished marvelous results with the aid of little more than this simple implement. I have studied the locks and actions of many an old weapon and unhesitatingly concede that their makers were real craftsmen, highly trained and possessed of wonderful artistic ability. Examples of their efforts are destined to live through the ages in the different museums of the world. True, very fine work is turned out by men with a file today, but we are living in a machine age when it is possible to eliminate much of the time-consuming toil, leaving only the finishing process to be done by hand.

The best advice for the beginner is that he should first of all learn how to use a file, good practise being to reshape into correct alinement test-pieces of steel that are out of square. Let him consider also the proper manipulation of flat files and acquire the habit of making strokes in a straight line without rocking, so that a perfectly flat surface follows instead of a rounded one. Convexity of surface may be detected by placing a small amount of Prussian blue or lampblack on a face plate or any other which is perfectly flat and sliding it over the part being filed, the high points being thereby revealed. Apply the file in a manner that brings it into contact only with these elevations, testing meanwhile for square and level qualities. It is necessary to hold any and all work firmly in a vise. Holding a file without rocking it, so that the stroke is taken on an even plane, is a matter governed entirely by painstaking practise.

Manufacturers furnish the trade with many kinds, shapes, and sizes of files, yet no one works for long before he feels the want of a design for a particular angle or bit of work that has never appeared in a catalog. For this, do not hesitate to grind one that comes nearest your requirements into the pattern you desire, for files are cheap considering the work they perform, and a special file ground today will always come in handy in the future.

This reminds me of an incident that strongly impressed on my mind the importance of such a tool.

During my early days in the Northwest, I stopped one night with a Swedish sheepherder. As I drove up to his camp I was greeted with the irresistible odor of mutton stew and coffee, and the unforgetable sight of a steaming pan of biscuits. The ill-disguised rapture on my face no doubt moved this herder to generosity and he insisted that I help in the consumption of these delicacies. I accepted with a celerity that gave my host no opportunity to change his mind. After putting away as much stew, coffee, and biscuits as possible for one of my proportions, I sat back contented and listened to his conversation. He was most anxious to rccount to mc the story of one of his recent accomplishments.

It seems that only a few days before our meeting he had accidentally filled the muzzle of his rifle with gumbo and then shot at a coyote. The result was naturally disastrous—the muzzle was blown off up to the front-sight slot. In a vicinity where coyotes are thick, a herder without a gun is about as useful as a cowpuncher without a horse. Undaunted by so small an incident as having a portion of his rifle muzzle destroyed, he immediately set about to remedy this situation. Rummaging about, he unearthed a file, or rather the remains of what had once been that useful article. After roping the gun to the bottom of the wagon the barrel was filed off square, or nearly so, until no vestige of the recent disaster could be detected. Slots were filed in the hexagon barrel and in lieu of a front sight a piece of baling wire was wound in place. The important thing, tho, was that it was serviceable and shot satisfactorily. Not a bad job for a sheepherder.

Grinding — A most valuable addition to a well-equipped shop is a small grinder. Throughout the book I have mentioned grinding often, and the use of the grinder for polishing operations. There are a number of good, yet inexpensive grinders on the market. Electricity to operate the grinder is ideal, but if it is not to be had, several other methods of furnishing power are available. In isolated places, a gas engine can be used, or a hand or sickle grinder which has a train of gears to furnish speed for the stone. The speed of grinders in general requires fittings capable of various adjustments, such as being driven from countershaft, etc.; other assemblies are makeshifts understood best by those who make them. The best arrangement is to attach power and countershafts to the machine. Since its use is now universal, I shall assume all have electric power, and give instructions accordingly. Figure 9, Volume II, shows an improved fixture to be made for grinding wood chisels and the blades of planes, etc. This is to be clamped to the bench

by first removing the tool rest. The angle of the fixture can be adjusted to any degree which suits the purpose and produces the desired result. Between 30 and 45 degrees is the proper amount of bevel required for tools. With this fixture it is possible to grind chisels or blades straight and at right angles. Select a grinding wheel suitable for most work, and include if possible, a number of others, different in size and cutting quality, to be used for the multitude of purposes constantly found for them.

Grade and Grain of Grinding Wheels—The term "grade" as applied to a grinding wheel refers to the tenacity with which the bond holds the cutting particles or abrasive grains in place, and not the hardness of the abrasive. A wheel from which the abrasive grains can be easily dislodged is called "soft" or of "soft grade," and one which holds the grains securely is referred to as a "hard wheel." By varying the amount and composition of the bond, wheels of different grades are obtained. The grades are designated either by letters of the alphabet or numbers, according to the system employed by manufacturers. The letter "M" represents a medium grade, and the successive order of letters preceding the following "M" denotes softer and harder wheels, or vice versa. (This method of grading wheels is not universally a standard system, except among the larger manufacturers.) The grain or coarseness of a wheel is designated by numbers which indicate the number of meshes to the inch through which the grains of the abrasive material will pass. For example, a 36 grain means that the abrasive will pass through a weave having 36 meshes to the linear inch. The method of grading wheels adopted by a number of different manufacturers can be secured from them, as they print these in chart form.

Selection of Wheels for Grinding—The grade and grain to use depends upon the kind of material to be ground, its degree of hardness, and the surface area in contact with the wheel. Theoretically a wheel is of the proper grade when the bond is just hard enough to hold the abrasive until it becomes too dull to cut effectively; then, because of the increased friction, the dull grains are torn out and new points come into action, so that the wheel automatically sharpens itself. The harder the stock being ground, the more quickly the grains are dulled; hence, as a general rule, the harder the material the softer the wheel, and vice versa, altho some very soft materials, such as brass, are ground with a soft wheel which crumbles easily, and does not become loaded or clogged with metal. When a hard wheel is used for grinding hard material, the grains become dulled, but are not dislodged as rapidly as they should be. Consequently, the periphery of the wheel is worn smooth and becomes glazed, and excessive pressure is required to make the wheel act. Any undue pressure tends to distort the work, and this tendency is increased by the heat generated. If the surface of the wheel becomes loaded with chips and burns the work, even when plenty of water is used, it is too hard. A highly polished surface is sometimes obtained at the expense of accuracy by using hard wheels that require so much pressure to make them grind that the work is distorted. In order to secure accuracy as well as the most economical results, the wheel must cut freely and without perceptible pressure.

I could continue through one or two pages of such advice in the use of the assortment of grinding wheels. Conditions under which wheels are used vary widely, so no definite rule can be given for selecting the proper grade and grain. The beginner's problems are limited in grinding operations, but as his field of activity increases, many simple rituals will be followed from habit, such as always to have at hand a container of clean water for cooling purposes; and he will learn never to grind a tool to greater heat when the color begins to appear without first reducing its temperature to normal by dipping.

Mounting Grinding Wheels—Grinding wheels should not fit tightly on their spindles, nor should they have any play. If a wheel is forced onto the spindle, there is danger of cracking. The diameter of the flanges should be about one-half the wheel diameter (never less than one-third), and they should in all cases be relieved to secure annular bearing at their circumference. The inner flange should be keyed or shrunken on to the spindle. Compressible washers of blotting paper or rubber may be placed between the wheel and the flanges to distribute the clamping pressure evenly, and the flanges should be clamped just tightly enough to hold the wheel firmly. The latter should be carefully inspected, and tapped lightly before mounting to discover cracks. New wheels occasionally burst when first brought to high speed, and those who have witnessed such an accident are usually enthusiastic and thorough in their examination of both wheel and mounting before exposing themselves again to unnecessary danger.

Glazed or Clogged Wheels—A wheel is considered glazed when its cutting surface has become dull and worn down evenly with the bond, which is so hard that the abrasive grains are not dislodged when too dull to cut effectively. Glazing may indicate either that the wheel is too hard for the work, or that its speed is too high. The remedy then for glazing is to decrease the speed or use a

softer wheel. Always keep the wheel true by the use of either a diamond or carborundum stick. As a rule manufacturers of electric grinders make available two wheels, one soft and one hard of the same grade, which when new are perfectly true, and the only satisfactory way to arrive at good results is to keep them in their original condition.

Learn to make use of the tool rest when grinding and always keep it adjusted properly to the wheel, thereby avoiding the danger of getting tools or your fingers caught between the wheel and work. Lastly have a guard over the wheel for protection to face and eyes in case the wheel should burst and set in action flying particles imbued with terrific momentum imparted through centrifugal force.

Laps and Lapping — The gunsmith is often called upon for such work as lapping special dies to size: lapping chambers, ring gauges, plug gauges, special test gauges, snap gauges, barrel plugs, etc. Figure 42 shows a set of lap arbors with the same taper as the taper-pin reamers—¼ inch to the foot. These are used for internal work, such as lapping ring gauges or any other work requiring a straight hole. Laps are usually made of soft cast-iron which makes it possible to produce a better finish. Whatever material is used, the lap should be softer than the work, otherwise the latter will become charged with abrasive and cut the lap. The order of the operation would then be reversed.

All laps for die work used at the Arsenal, when I was stationed there, were made of pure lead, as it was inexpensive and gave fine results. The arbor for the lap was made of cold-drawn steel with grooves to hold the lead, which prevented it from turning when the lap was slightly smaller than the hole and ceased to cut. The lead was expanded on the end, and this was repeated a number of times. Other laps were cast from pure lead and turned to the required size for the different draw dies, and these were used continuously for a number of days by the operators.

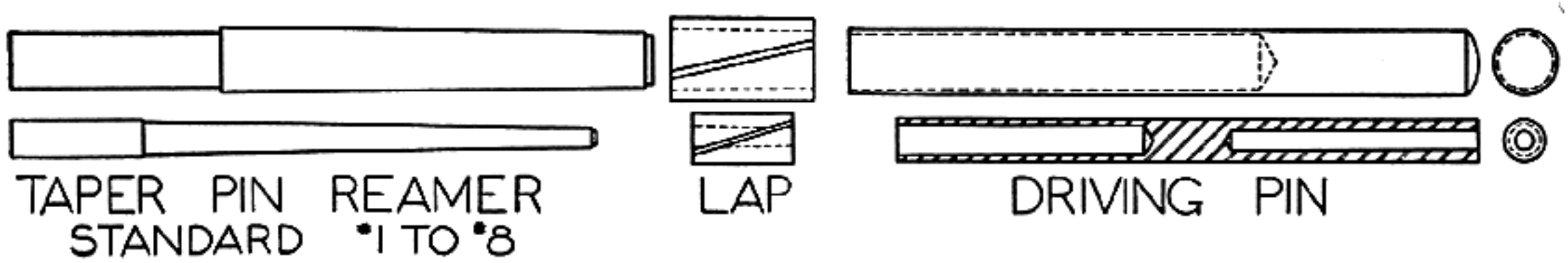

Fig. 42
Internal lap, arbors, and driving pin. If much lapping is to be done, a full set should be made

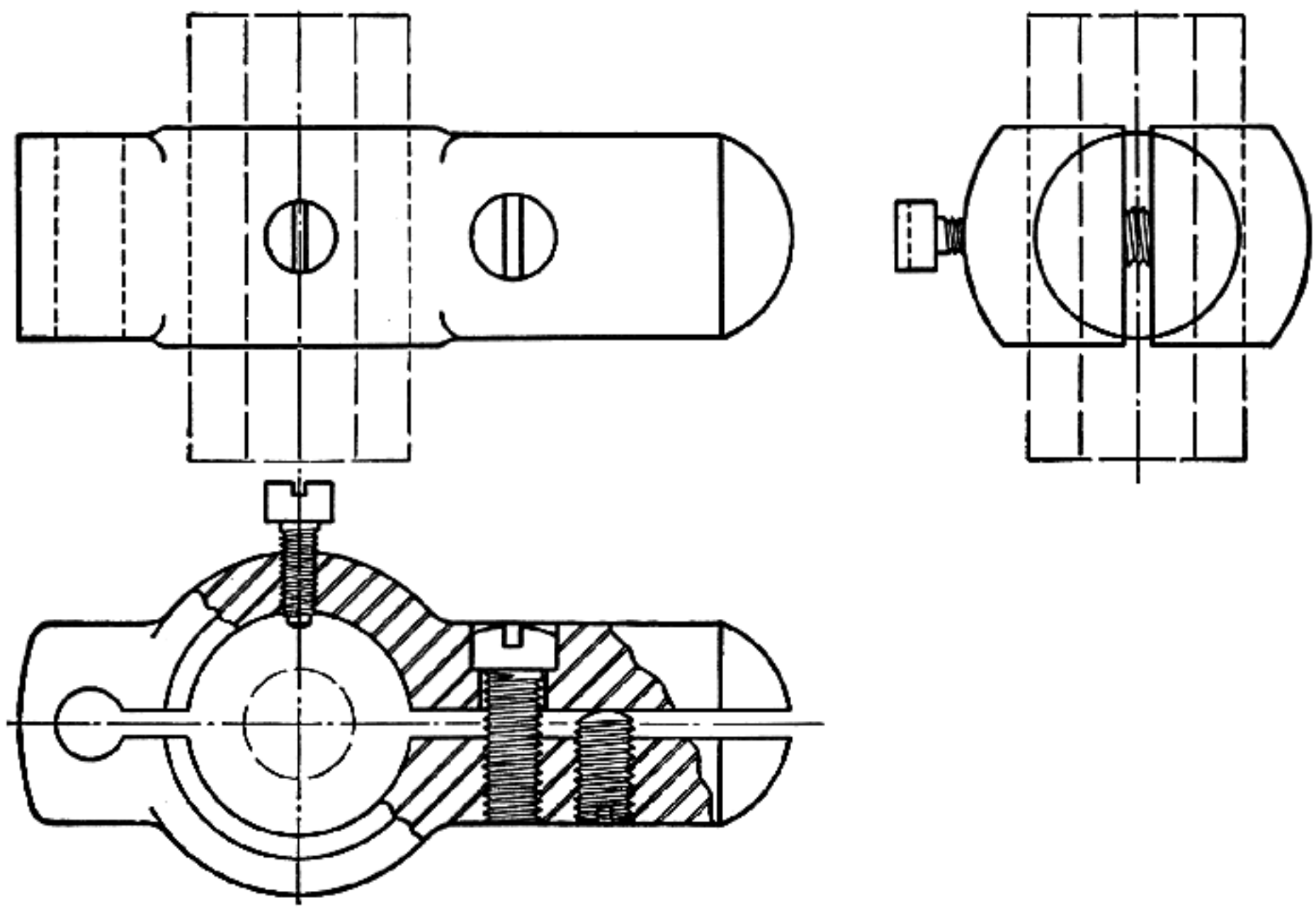

Fig. 43
External lap holder

External laps are used in the form of a ring with an outer band or holder and an inner shell, which forms the lap proper, made of copper, cast-iron or brass. The lap is split and screws are provided in the holder for adjustment. Length of an external lap should be at least equal to the length of the work; a little longer does no harm. Figure 43 illustrates one of these.

Grading Abrasives for Lapping—For high-grade lapping, abrasives may be evenly graded as follows: a quantity of flour emery or like abrasive is placed in a heavy cloth bag which when gently tapped causes fine particles to be sifted through. After a sufficient quantity has been obtained it is mixed in a dish with sperm or olive oil. The larger particles will sink to the bottom in about one hour and the oil should then be decanted into another dish. Be careful not to disturb the sediment at the bottom. The oil is allowed to stand for several hours longer, after which it is poured again, and so on until the desired grade is obtained.

Charging Laps—To charge a copper or cast-iron lap, spread a little of the prepared abrasive over the lap and roll it between two hardened steel blocks; do not rub, but roll the lap with even pressure. On laps for external work, a hardened steel plug smaller than the hole should be used to roll the abrasive into the ring. For breaking, when there is a considerable amount of material left on the gauge, I mix coarser emery with sperm oil, charging and using the copper lap with it until there are only two to three ten-thousandths left to finish with the finer specially prepared abrasive. When a lap is once charged it should be used without applying more abrasive until it no longer cuts. If a lap is overcharged with abrasive, a rolling action between the lap and work takes place, which results in uneven distribution. A properly charged lap should never develop bright spots. On the contrary, the surface should be a uniform gray. Use plenty of sperm or olive oil to wash the fine steel cuttings away from the lap, keeping the same adjusted to prevent the work from becoming bell-mouthed.

Dry Lapping—Use the finest optical emery by lightly sprinkling it over the fast-revolving lap; wash off with gasoline and test for size often. To finish, use powdered rouge in the same manner; when completed you have one of the most highly finished surfaces possible.

Laps for Flat Surfaces—Laps for plane surfaces are made from cast-iron and lead. Figure 44 illustrates a small cast-iron lap for small work. In order to secure the most accurate results, the lapping surface must be a true plane. On the cast-iron lap the surface is checked or scored by narrow grooves located between ⅜ and ½ inch apart across the full length of the plate, forming a series of diamonds as on a stock. The lead lap is constructed in the same manner except for the grooves, its surface being a true plane. The latter is used as a roughing lap and the cast-iron one for finer finishes. After a lap is charged, all loose abrasive should be washed off with gasoline to determine if the surface has a gray appearance. Repeat until all bright spots are charged, if this is not the case. When lapping, the surface should be kept moist with kerosene; gasoline will cause the lap to cut a little faster, but it evaporates so rapidly that the surface becomes glossy in spots. Loose emery should never be applied while lapping, for if well-charged with the fine abrasive in the beginning, kept well-moistened with kerosene, and not crowded too much, it will last a long time. The pressure applied to the work should be just enough to insure uninterrupted contact. A lap can be made to cut just so fast, but with too great pressure it will strip in spots. The causes of scratches on the work are: loose abrasive on the lap, too much pressure, or poorly graded abrasive

Diamond Laps—I use diamond laps and diamond dust extensively, especially on very fine holes, charging laps for lapping the spindles of anvils of micrometers, and charging cast-iron lapping plates

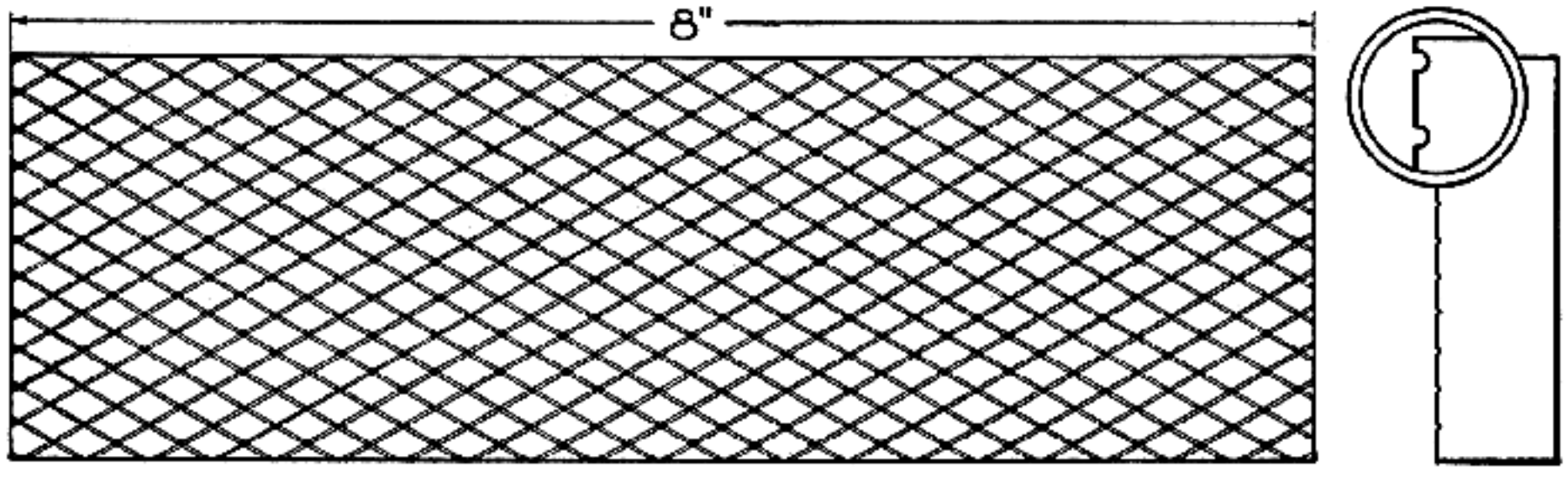

Fig. 44
Cast-iron lapping plate. Made in various sizes to suit requirements

to this condition, will last for years, provided you exercise reasonable care in its use.

All reamers are ground lengthwise in a special tool grinder made for them, and, like wood-working tools, they must first be put into sharp condition before reliable work can be expected. All reamers when new are up to size or three to four ten-thousandths over. Copper-plate each flute, and with a medium or fine ½-inch oilstone, stone the flutes up to cutting edge by starting from the rearmost portion. If you are experienced in the stoning process, it is possible to stone lengthwise, an operation in which the high points left by the grinding wheel are immediately discovered. They must be stoned until the flute has a bright evenly polished surface, at the same time retaining size. To avoid a chattered hole, see that each flute cuts, with the others, an equal amount of chips. Particularly with tapered reamers is it more or less common to encounter chatter, which, naturally, is fatal to a satisfactory recess. Important to remember is—never chuck a hand reamer in a lathe or drill press, as hand reamers are made to ream by hand only; the same may be said for taper-pin reamers. Machine reamers are specially made; included in this type are the taper-pin reamers. It is a grave mistake to allow more than three to five thousandths of stock for the reamer to remove. When a rough drilled hole is encountered it does require more stock. A clean-bored hole need have only two or three thousandths of metal to be finish-reamed.

Screw-drivers and Bits — This subject has been more or less neglected, because every one looks upon a screw-driver as a tool intended either to remove a screw or to place one in position. On gun work, owing to the screw slots being much smaller than the standard recommended by manufacturers, the quality of the screw-driver is of major importance. It would be impossible to picture a high-grade shotgun made with screw slots from .025 inch wide for 1/16 screw to .057-inch width for a ¼-inch screw; they would look and be entirely out of proportion. For this reason the makers have adopted small-slotted screw heads for both rifles and shotguns. In order that the gunsmith can cope with this situation he must have screw-drivers constructed in a way quite different from that of the ones usually purchased in a hardware store. The latter are, as a rule, made only from cheap material; and when ground to fit a gun screw, they twist out and mar the head, a fault which is inexcusable even in an inexpensive arm.

Figure 21 will show the correct way to shape screw-drivers for gunsmithing purposes; unless the bit fits the slot in every dimension, there results, as just mentioned, a distorted or damaged head. This fact makes it imperative, for really fine work, to have a driver for every slot size.

In attempting to remove a tightly imbedded screw that does not yield to ordinary effort, I obtain the best results with correctly sized driver bits that fit a brace, exerting steady pressure on the brace with the left hand, and with the right gently turning the screw out. This method will start any screw no matter how firmly set, and may also be employed to seat them tightly. Have you ever noticed that on a high-grade gun, resting on its butt plate, all slots point in the same direction, north and south, according to the points of the compass on the map? Well, it's true, and the same applies, in a continued line, to the butt-plate screws. Any other arrangement is considered unsightly and a detraction, marking the difference between precision and indifference. Be as particular in the care of good screw-drivers as of any other valued tool by refusing to submit them indiscriminately to the grinding wheel for every odd-sized screw, but rather have a generous selection, well filed, tempered, made from the best spring steel or drill rod, and fitted to serviceable handles.

Soldering — Years of experience in this line have led me to believe that nine out of ten men who have occasion to resort to this art could still, with advantage to their work, improve their technique. Soldering is sometimes erroneously referred to as "sweating," but there is a vast difference in strength between a well fitted and sweated union and one soldered in the ordinary way. An important point, frequently overlooked, is the proper cleaning of surfaces to be joined, and this operation is too often left for the flux to correct. While nearly all metals can be joined by use of the same flux, a proper selection is at times necessary. The result following improper preparation and cleaning overshadows in every instance the effects of good soldering and is particularly noticeable in gun work. For strength, adapt the parts to one another perfectly, because the more accurate the fitting, the stronger the union. Use a solder with as high a melting point as possible. The temperature of the work to be joined should be brought as near as possible to the melting point of the solder to insure better fusion and flow.

There are a number of fluxes or soldering salts on the market that are satisfactory. Their action in soldering is to remove and prevent the formation of oxids during the operation, to allow the solder to flow freely, and to unite firmly the surfaces to be joined.

For sheet tin, rosin or colophony may be used,

but owing to the ease and rapidity of applying, a solution of zinc chlorid (zinc dissolved in HCl) is more generally employed. Beeswax or tallow can be used, and so can almost any of the pastes, fats, or liquids prepared for that purpose.

For lead, a flux of almost any oil and rosin in equal parts is satisfactory.

Lead burning, now almost a lost art, is a different operation from soldering. Here the surfaces must be bright and free from all oxid, while instead of solder, which is tin and lead, the operation is done with pure lead, rosin and oil.

Fluxes — Hydrochloric acid, rosin, turpentine, tallow, and especially chlorid of zinc or soldering liquid, are among the common fluxes used in soldering. For a complete list see Chapter XXVI.

A very good acid mixture for cleaning work to be soldered is equal parts nitric and sulfuric acid and water. *Never pour the water into the acid!*

By laying a piece of tin foil, covered on both sides with a flux, between two perfectly fitted and clamped parts and heating until the foil is melted, a satisfactory union is effected. This is very good in joining broken parts of brass and bronze work. If their apposition is good, they can be joined in this manner so that the joint is not only strong, but almost imperceptible.

A solution of copper for copper-plating steel or cast-iron before soldering is easily made and applied. It is identical with the one recommended for coppering the flutes of reamers before stoning, and is composed of copper sulfate 3½ ounces, sulfuric acid 3½ ounces, distilled water 1 gallon. Dissolve the copper sulfate in water and add the acid.

The best solder for gun work such as soldering ramps, rear-sight bases, sling-swivel bases, etc., is 75 per cent lead and 25 per cent tin, which has a melting point of 482 degrees Fahrenheit. Solder having a low melting point is not recommended for gun work because of the heat a rifle or shotgun is subject to in rapid fire. The tropical sun of Africa has been known to melt off soldered parts of firearms where no attention was given to this feature.

The soldering copper for ordinary use should be about 1½ pounds in weight, length 2½ to 3 inches, octagonal in form, and pyramidal point with square edges. It should be fixed to a straight or angulated iron rod about 8 inches long with an ample wooden handle. When heating for use, the best way to ascertain correct temperature is to hold it near the face. By virtue of heat emanation one soon learns to know if the copper is heated to the right degree, and if a bright warm glow is felt, it is hot enough for use.

Taps and Tapping — When the amateur first finds use for taps he is likely to become discouraged, since most tapping troubles are caused by the use of drills that are too small in diameter. Tap drill sizes made specially for machine screws should be varied according to the material to be tapped and the depth of the tapped hole. Soft, tough material such as copper, Norway iron, stainless steel, aluminum, etc., should have a larger hole for the tap than harder metals. If the recess is a trifle too small when tapping soft material, the thread is in danger of being torn off, the effectiveness of the thread depth is decreased, and is not nearly as perfect as it would have been had the tap drill been larger. When tapping soft material, the metal at the top of the thread is somewhat drawn, thereby increasing the depth of the threads, particularly if the keen edge of the tap has been dulled from use.

For the beginner it is best to check from a table of double depth of threads. As an illustration, suppose we wish to tap for a 6 x 48 screw which is a U. S. standard form of thread. Let us turn to the table of double depths of thread, where it will be observed that for a number 6 tap measuring .138 inch in diameter, .027 is double depth of a 48 thread. But because the metal expands as a tap is used in a hole, we can drill a hole only 75 per cent of that depth of thread. Therefore the correct drill would measure 0.111 inch; this being too small we must select a size larger, which must measure 0.120. The nearest drill to that size is selected, which is #31. When only a shallow hole is to be tapped, two drills are needed—one for starting and one for bottoming. The latter may be accomplished by use of a drill ground off square at point, or a flat-bottom drill, originally constructed for the purpose, permitting installation of the greatest number of threads. In the use of small taps, be particular to grind them with the correct leed, which is the cutting point of the tap. Most taps are furnished with a correctly ground leed, but after they become dulled, it is necessary to grind the end back and regrind the leed. Before grinding a tap, study a new one for the purpose of learning how the manufacturer first ground the leed, and follow that pattern. Even the best mechanics are inclined to grind too much clearance, which causes a tap to break easily. Satisfactory results are obtained only when using a tap wrench, proceeding slowly with small taps, and never trying to complete a full turn of the tap. The secret of success is to back it out a good half-turn, starting again slowly, for taps are brittle and easily broken. If you are conscious that a tap springs in the least, reverse and start over.

To Remove a Broken Tap—When broken near the surface it is an easy matter to remove it by

driving on both sides with a round punch, ground in the form of a round-nose chisel. Two persons can do this much better than one by striking light blows; when they are striking evenly the force of the blows can be increased as may be required. By driving on both sides, the tap is not wedged against one side of the hole as when using a single drift, but is forced to turn out. This is an old method, and one of the first I was taught.

Another method, which has proven a life-saver many times, is to inject into a hole a little nitric acid, diluted in the proportion of one part acid to three parts water. The action of the acid upon the broken part and steel loosens the tap so that it can be removed easily. The remaining acid should be washed out so it will not destroy the threads in the steel, which then should be coated freely with oil.

Lubricants for Tapping—The breaking of a tap is caused by: improper lubrication, the tap not being square with the hole, ignorance, or carelessness. Frequency of this misfortune can be reduced greatly by proper lubrication alone. Ranking first and best among the greases I use is a mixture of white lead and sperm oil. Another reliable combination is 10-per-cent graphite, 30-per-cent tallow, 40-per-cent white lead, and 20-per-cent sperm oil. Machine and lard oil class with the poorest of lubricants for tapping; however, they are probably used more extensively than either of the two good formulas just mentioned. When tapping in cast iron, a small amount of kerosene helps materially. In high-power firearms a full, fine, smooth thread is imperative to obviate the dangers of the sudden, violent, and repeated shocks, which have a cumulative effect upon every part of the mechanism.

Makeshift Taps—I have often made a tap by threading a piece of steel in a lathe or with a die, filing three flutes in the end, then backing off the clearance, and after hardening and tempering I had a tool that lasted for many operations. If the need is urgent, file a flat on the end, on a taper; then remove a small segment of the remaining arc, constructing thereby a cutting edge; harden and temper and finish the hole with this. You will find very often in gun work that the manufacturer has not used a standard screw or thread and it will be necessary to ease out a tapped hole for just one particular screw. A tap made in the above manner has a considerable amount of clearance, answers the purpose nicely, and is not easily broken. When it becomes dull, all that is necessary is to grind the face or flat; if it should then cut too large, narrow the face by further grinding.

Turning Tools and Tool Grinding — Turning tools are of varied shapes adaptable to the many different purposes they are intended for. There are certain principles governing the form of turning tools which apply generally. When grinding lathe tools or any other turning tools there are three points to remember: first, the cutting edge of the tool as viewed from the top must have a specific shape or contour; second, there must be a certain amount of clearance below or behind the cutting edge; and third, tools are given a backward shape, so to speak, and a side slope, or a combination of the two on the part against which the chip bears when the tool is in use. However, experience is our best teacher in the different ways of grinding lathe tools. It is much more economical to buy the $\frac{5}{16}$ standard high-speed tool bits and an Armstrong tool holder than forged tools. These are designated by different names, such as parting, thread, side, turning or round nose, boring, etc. The shape when viewed from the top is suggestive of other uses than plain cylindrical turning. The exact form can be best determined under working conditions. This is illustrated by reference to the parting tool which is used for cutting grooves and parting work at given intervals over specified distances. Naturally it must be widest at the cutting edge to prevent binding while feeding into the work.

Aside from the contour, in relation to the cutting edge, there remains to be determined the proper clearance, amount, and direction of the slope of the top of the tool. The word "top" is used to designate that surface against which the chips bear when severed from the work. For most tools it should slope away from what is the working part of the cutting edge and be set a trifle above center. To use this type in turning a diameter of, say $\frac{1}{16}$ of an inch, it would be impracticable; so we grind one with a more pronounced point and greater clearance at the top. On small work the metal must be removed with an even free cutting effect. In thread tools the clearance must be less decided, but for really good work it is advisable to stone the point on center. If the reader familiarizes himself with the above he will at least have a working basis to start from; but, as already stated, success will be commensurate with the amount of painstaking practise which has been expended.

ACCESSORIES

Alcohol Lamp and Bunsen Burner — An alcohol lamp or, when gas is available, a Bunsen burner, is almost indispensable to the gunsmith. Let us suppose a small bent trigger spring is to be made. It can be formed by resorting to a small piece of discarded watch spring, heating it over the lamp or burner until blue, then with snips or hand

shears, cutting it to the required width. Heat again in the flame of the burner or lamp, and with a pair of pliers bend to shape. It is not always necessary to temper these springs, but when they are heated until red and hardened in oil, draw the temper to suit. This operation can be done without moving from the bench, much more quickly, and certainly better, than it could be done at a forge or with a gasoline torch.

The advantages of the alcohol lamp and Bunsen burner over the forge or furnace are: they draw temper on small parts evenly; the temper colors can be readily seen, as the flame of alcohol or gas makes no smoke to obscure it; they are convenient for small tempering such as taps, small screws, special drills, bending small files to odd shapes; and they are indispensable in laboratory work. Figure 45 illustrates the burners used by gunmakers.

Emery Paper and Cloth — The finer grades of French and Turkish paper for exquisite finishes should be on hand and used after the polishing process by the cloth. Never destroy the cloth, as this is useful in one way or another until devoid of all abrasive. There are a number of different grades of the latter, from FF to #40. Cut or tear the sheets into convenient pieces for the work to be done. When using the cloth on work where file marks show, first use a coarser grade by folding it around a file, which is then applied in the customary manner. Be careful to remove all marks and scratches left by the previous grade before the employment of a finer. When using the finest emery cloth, moisten the surface with sperm oil for a fine, soft-appearing polish; to bring the finish to a high luster, use fine French paper without oil, completing with crocus cloth. To use emery paper or cloth in a lathe, run on high speed and hold the cloth on a flat file. When holding emery cloth by hand for polishing fast-revolving round pieces, care must be taken that the hand does not get caught in the cloth, as at times it clings to the work, thereby causing a serious injury.

Forge and Anvils — These are possibly not used as frequently as other tools, yet they are extremely important and desirable as part of any shop equipment, especially that of the gunsmith. The forge may be of the regular forge design, gas furnace, or gasoline blow torch. The latter is only used in emergency, when a proper forge or furnace is not available. Suitable anvil and small blacksmith tongs to handle the work should be included. It is said that the quality of an anvil can be judged by the ring. At any rate a good anvil gives out a clear sharp sound when struck by a hammer, and if soft or defective the tone is dull and unmusical. A perfect anvil so mounted that it gives out a volume of sound is much easier to work on than one having a dead ring. They vary in weight from 50 to 300 pounds, but for the gunsmith an anvil weighing between 60 and 100 pounds is adequate. It is necessary to strap it to a block to insure stability. Its height should be such that when standing beside it one's knuckles will just reach the top surface. A

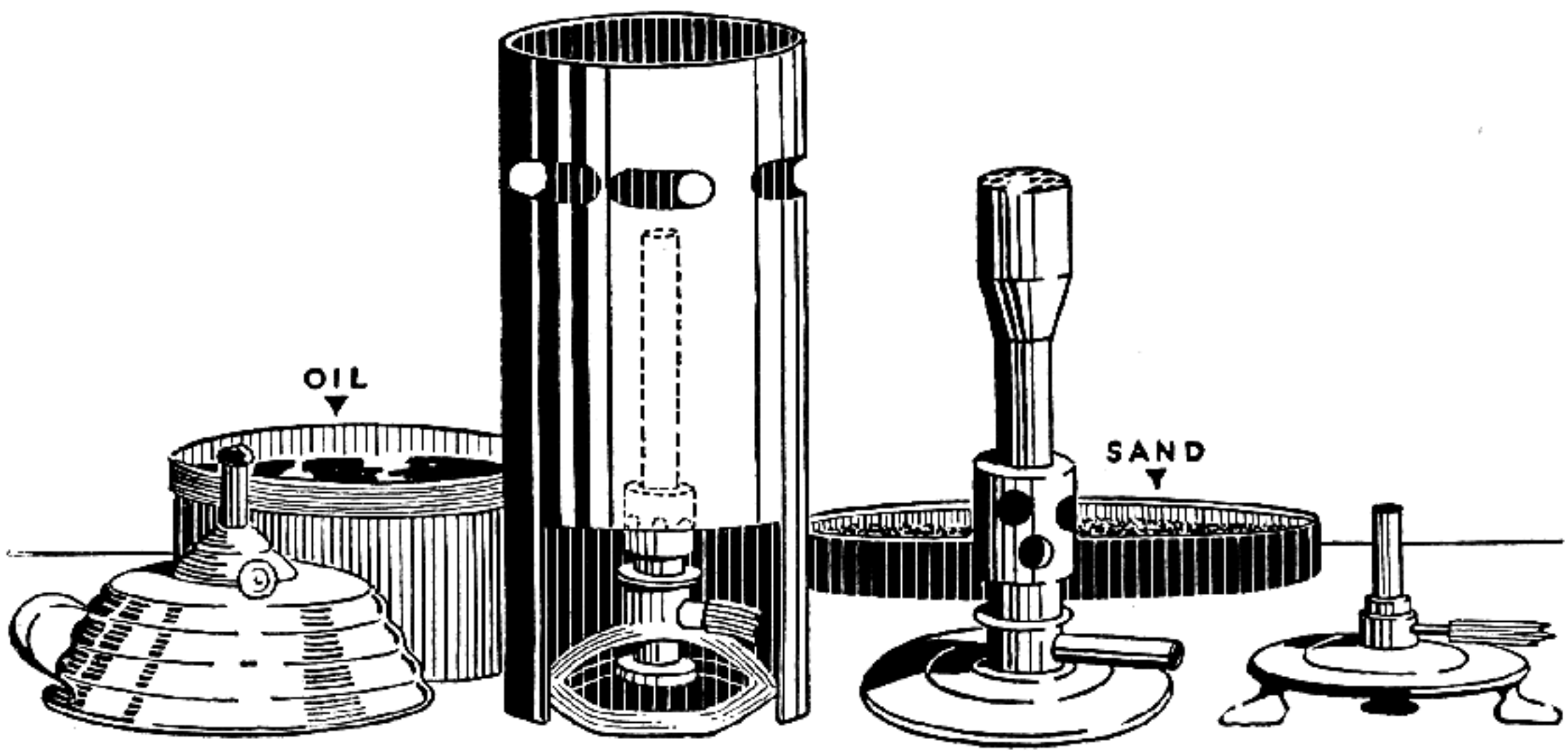

Fig. 45
Bench burners and equipment customarily used for hardening and tempering small parts

solid oak block set endwise in the ground makes a good foundation, but for the small shop a cast-iron support serves as well. An anvil should never be strapped rigidly to its foundation, as this checks the vibration which tends to keep its face free from scale.

The square hole in the face for receiving the cutting and forming tools is called a "hardie hole," the small round hole near it, the "pritchel hole," and the pointed end, the "horn." Anvils are usually made with a wrought-iron body to which is welded a hardened steel face.

When hand forging, two qualities of heat figure in the operation. If the object is merely a drawing out or surface smoothing, the "cherry-red heat" is called for. The work of drawing out or smoothing is performed by striking lightly and evenly with a hammer until the desired result is secured. A like degree of heat is employed where closing the structure of the steel is the object to be attained, but in this case the blows of the hammer should be heavier. If the forging is to embrace a material change in shape, the rate of heat must be increased. A gunsmith rarely needs a sledge hammer, as the material he works with is not of a size to warrant a tool of that weight.

Micrometer and Its Use — This is the instrument of precision *par excellence* for the gunsmith, without which his activities are like those of a mariner at sea deprived of compass and sextant. It furnishes a constant means for checking screws, pins, drills, drill rod, bullets, and a thousand and one other things. To read a micrometer, count the number of whole divisions visible on the scale or spindle, multiply this number by 25 (the number of thousandths of an inch that each division represents) and add to the product the number of that division on the thimble or barrel which coincides with the axial zero line on the frame. The result will be the diameter expressed in thousandths of an inch. As the numbers 1, 2, 3, etc.—opposite every fourth subdivision on the spindle—indicate hundred-thousandths, the reading can then easily be taken mentally.

Suppose the thimble or barrel were screwed out so that graduation 3 and two additional subdivisions were visible, and the graduation 10 on the barrel or thimble coincided with the axial line on the spindle. The reading then would be 0.300 plus 0.50 plus 0.01 or 0.360 inch. Some micrometers have a vernier scale on the side of the spindle in addition to the regular graduation so the measurements within 0.0001 part of an inch can be taken. (This sort of micrometer I consult for reference, and use a plain micrometer for what I call rough work.) Micrometers of this type are read as follows: first determine the number of thousandths as on an ordinary micrometer, and then find a line on the vernier scale that exactly coincides with one on the thimble or barrel. The number of this line represents the number of ten-thousandths to be added to the number of thousandths obtained by the regular graduation. The reading would be expressed as follows: Suppose the barrel were screwed out so that graduations 4 and one additional subdivision were visible and the graduation 15 on the barrel came over the line half-way, so the reading would be 0.400, 0.025, plus 0.015, plus 0.0005, or 0.4405, as 23 would coincide with 5 on the spindle.

A micrometer to the amateur is a novelty and he usually makes a plaything of it at first, measuring everything with which he comes in contact, from the hairs on his head to the whiskers of the cat.

Oilstones — These embrace a large variety of shapes and sizes applicable to such work as stoning reamers and actions, sharpening small drills, relief on taps, all cutting tools, etc. The natural oilstones most commonly used are the India and Arkansas. The Washita is a coarser and more rapid-cutting stone than the Arkansas, and is used mostly for sharpening wood-working tools. There are various grades of Washita which vary from the perfect crystallized and porous whetstone grit to vitreous flint and hard sandstone. The sharpness of the grit of any Washita stone depends entirely upon the character of its crystallization. The best whetstones are porous and uniform in texture, and are composed entirely of silica crystals. The poorer grades are less porous, making them vitreous or glassy, and may have hard spots or sand holes or contain grains of sand among the crystals. For general work a soft, free-grit, quick-cutting stone is required, altho a fine-grit medium hard stone is sometimes preferred. Some Washita stones are white, while others are streaked more or less with a yellow or red tinge. They are found in the spurs of the Ozark mountains of Arkansas. The Arkansas stone is harder, more translucent, and of greater density than the Washita. It has an exceedingly sharp grit, and will cut as well as polish very hard metals, such as high-speed steel tools and reamers. The Arkansas stone is used more frequently in gun work than the Washita to produce the fine cutting edge required on chambering tools, etc.

Artificial stones are made in a multitude of shapes and sizes and are adapted for sharpening all kinds of tools. Such stones are made by the Norton Company of alumdum and crystolon, the former being known as India oilstone and the latter as crystolon sharpening stones. Similar shapes are

manufactured by the American Emery Works, and The Carborundum Company, which makes them in a great variety.

They are supplied in three grades or grits: coarse, medium, and fine; the coarser ones are used to rough out work or sharpen extremely dull or nicked tools, etc., while for sharpening carpenters' tools and as a general purpose stone, the medium variety is selected.

Fine Arkansas stones are best adapted to the finishing of reamers, particular cutting tools, etc.

How to Care for Oilstones—Like all other tools an oilstone can be ruined by abuse and lack of care. There are three axioms to be remembered in the care of an oilstone: first, to retain the original life and sharpness of its grit; second, to keep its surface flat and even; third, to prevent its glazing.

To retain the original freshness of the stone it should be kept clean and lightly covered with oil. To let an oilstone remain dry for long, or exposed to the air, tends to harden it. A new natural stone should be soaked in oil several days before being used. If in a dry place, it should be kept in a box with a closed cover, and a few drops of fresh clean oil left on it, preferably sperm oil.

Tools should be sharpened on the edges of a stone as well as in the middle to prevent it from being worn down unevenly, and it should be turned end for end occasionally.

To restore a flat even surface, secure a cast-iron plate having a true surface and sprinkle loose emery mixed with water or gasoline on it. Place the oilstone upon the plate and grind it true by either a circular or back and forth motion, but hold the stone in center so it will grind evenly all over. This method is adapted to all grades, but stones of special shape may be reformed by planing a groove corresponding to the shape of the stone in a cast-iron plate and drawing the stone through the groove, using water or gasoline and emery as just described. #90 or 100 emery is the best for this operation.

To prevent an oilstone from glazing requires the proper use of oil and kerosene. The purpose of using either oil or kerosene on a sharpening stone is to float the particles of steel that are cut away from the tool, thus preventing them from filling in between the crystals and causing the stone to glaze.

On medium and fine-grained natural stones and in all artificial stones, oil should always be used, as kerosene is not thick enough to keep the steel out of the pores.

To further prevent glazing, the soiled oil should be wiped off as soon as possible after use. This is important, for if allowed to remain, the oil dries into the texture and carries the steel dust with it. If the stone does become glazed or gummed, a good cleaning with gasoline will restore its cutting qualities. If not, scour with loose emery or sandpaper fastened to a perfectly smooth board. Never use turpentine on an oilstone for any purpose!

Sandpaper — This is furnished in grades ranging from #3 to 7/0. The latter is the finest grade and is used only for the finishing operation on stocks or other wood work. To use sandpaper properly, fold it, after cutting to desired size, around soft rubber or cork 1¼ by 2½ by 4 inches, which makes a convenient and very efficient hand hold. The flexible cork or rubber follows a curve much better than if the holder were solid. When a large flat surface is encountered, or one just a little irregular, make a holder from leather and thin strips of wood. A large amount of space can be covered by this device much more thoroughly than any method I am acquainted with. For reducing the size of rubber recoil pads, sandpaper or emery cloth glued to wooden discs for attachment to a grinder spindle is invaluable. A good investment is to have a generous supply on hand embracing a wide range in grades, as its uses are many and it fills a need that can be replaced by no other accessory.

CHAPTER V

Reading and Making Drawings

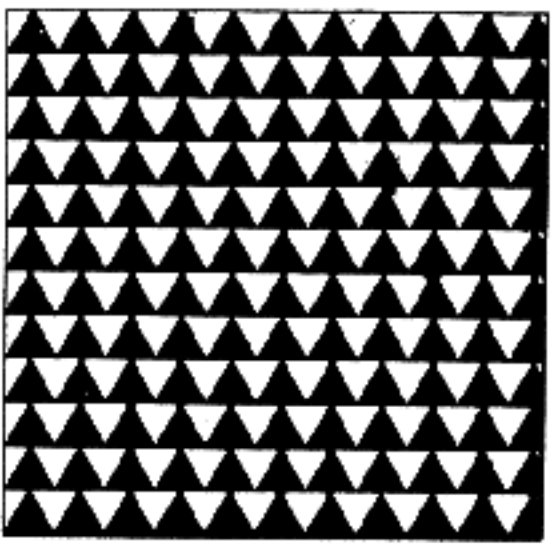

CHAPTER V

Reading and Making Drawings

AN UNUSUALLY large number of shop drawings have been used to illustrate the two volumes I am presenting on gunsmithing, especially the second. I realize that a number of these books are going to be placed in the hands of men not trained in the mechanical arts, and they should have an idea of the things the pictures represent. The drawings have been reduced from a tracing measuring 22 x 36 inches and larger down to the required page size of the book, consequently the reader may not be able to decipher many small figures and letters without the use of his magnifying glass. To be able to read a blueprint or drawing is as essential to the beginner's success as to be able to read the printed matter between the covers. To read the drawings we should know some of the principles of making them. These will be explained as concisely as possible according to the space permitted. The reader should first understand that a drawing is a record of instruction given him to read; secondly, he should realize that the language used by an engineer in making his drawings is largely a language of lines, and that unless he knows how to read lines, the instructions recorded on the drawings are written in a foreign tongue.

Study the several views until you have a good mental picture of what is to be constructed. A drawing is a flat surface, and, as with a map, it is necessary for the reader to use his imagination to make the lines and views rise from the paper. When a clear-cut mental picture has been formed, the dimensions should be studied until understood. Next, all the lettered text should be read and carefully considered. Carelessness in any one of these three respects is inexcusable.

A drawing is, in a sense, a picture made up of views; for example, front view, top view, end views, etc. These views are made up of lines which would show clearly to the eye if the part, accessory, machine or fixture were viewed from the several positions noted. A front view consists of those lines which would be clearly seen if the observer were viewing the part or fixture from the front. The drawing should also contain all the essential dimensions and indicate clearly from what surface they are to be taken. In most instances, a distinct arrowhead with the point resting against the line represents the surface or outline from which the measurement starts, or from the work line which represents a surface edge and has been lengthened to make it convenient for placing the arrowhead. Another arrowhead is placed against the line representing the surface where the measurement stops; the arrowheads are connected by a line called a dimension line, and the given dimension is placed either in this line or directly over it. The drawing will probably also contain lettered directions: some are to be ground, and the words "precision grind" or the letters *PG* may appear on those surfaces; others are to be finished, and on these the letter *F* may be used, etc. Figure 46 illustrates the manner in which a part is viewed.

Many of the drawings in the books are mere projection drawings with which a single idea is meant to be conveyed. To understand thoroughly what the term "projection" means, study the action of light upon an object. Take as an example a street car along the street; our view of that car is made possible by the fact that light is reflected from it into our eyes. This is true of all objects which we view, and we say that we see the car or object. In other words, the light which is thrown back from the car into our eyes gives us a view of the car. If the car or object faces toward us we get a front view, if away, a rear view. While the object itself is not a source of light, it is so treated in viewing it, and the light is said to be projecting from the object viewed. When a view drawing is made, it is often known as a projection of an ordinary (part) without any dimension. These drawings are merely a means of conveying to the reader an idea of the part; later it will be found necessary to work out the details.

It would be well for every reader interested in this work to make good mechanical drawings, for with the ability to make drawings would come the ability to interpret them. But there are often many reasons why this is not possible, and it is with the idea of giving the requisite amount of knowledge and practise in visualizing the finished product from plans, elevations, and sections that this chapter has been prepared, for it will explain more to the mechanically trained man than I could

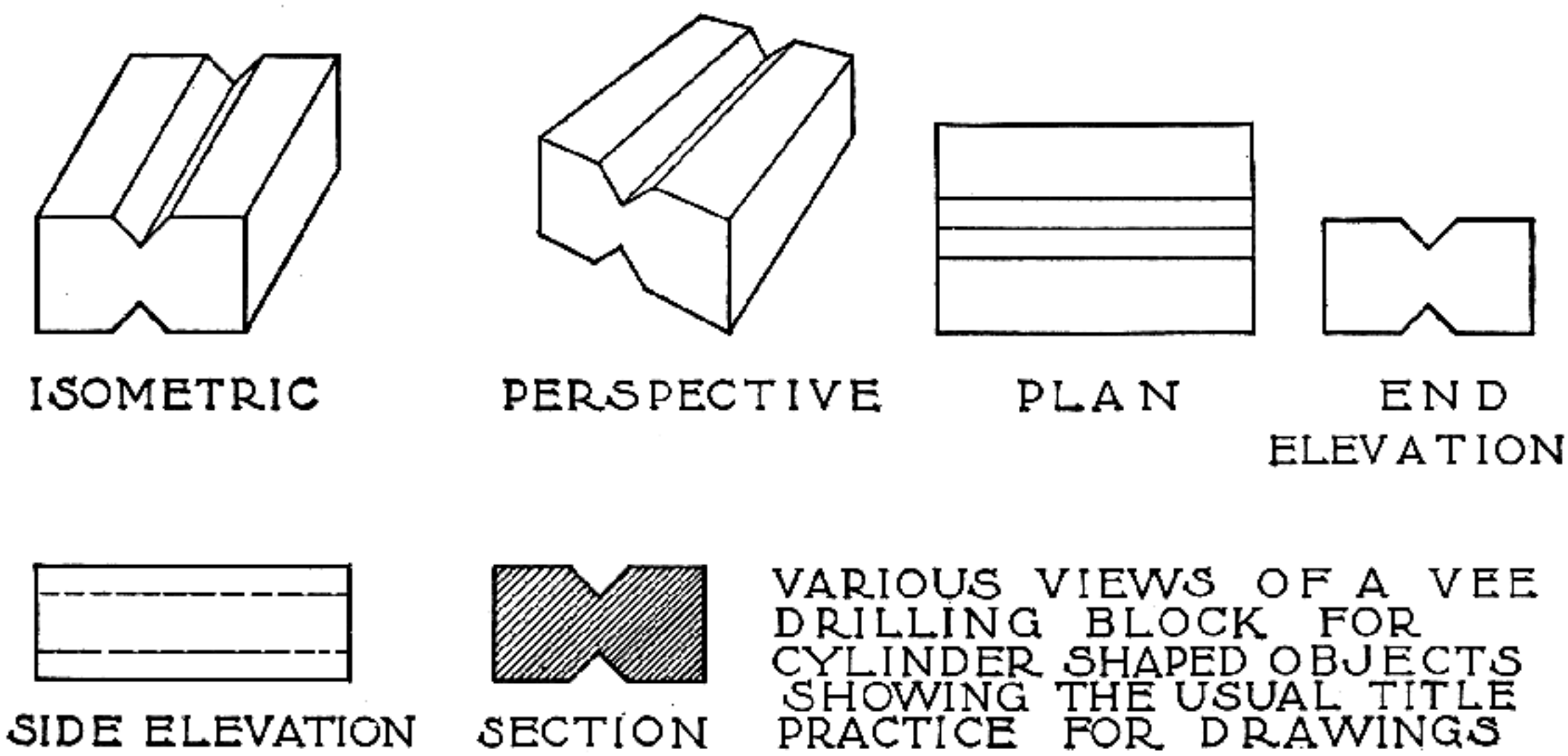

Fig. 46
Illustrating different views of an object in mechanical engineering

ever explain in writing. With a careful study of the drawings herein will come the ability to "read" one of these complicated drawings like the rest of the book; it is interesting to translate every shade of meaning intended by the designer and thus be able to carry out the work in an accurate, efficient, and craftsman-like manner.

These drawings were first sketched freehand as each chapter was written and then handed to engineers or draftsmen skilled in the art of mechanical drawing. These men first had to lay the foundation for the more advanced work by learning the kind of equipment necessary. They had to train their eyes to visualize the objects which I had drawn freehand and which only expressed the general meaning. In visualizing these objects it was necessary to measure distances, to draw with precision lines of uniform width and accurate direction. It was necessary for them to learn the rules of geometric construction, the method of representing plans, the elevations of objects, and the principles of orthographic, isometric projections and profile work.

Even tho a great reduction has been made from the original linen tracing, the reader can read every detail distinctly. If he should wish a reproduction (a blueprint) from these original drawings, I have made arrangements with the publisher, so that it will be possible to obtain such reproductions at a reasonable cost. The full-page drawings in these books are 22 x 36 inches, the half-page are 22 x 18 inches, and others in proportion. A blueprint, as used by engineers and by mechanics in the various industries, is a reproduction of what is known as a "working drawing." A working drawing, made from the tracing, shows by means of lines what the piece, part, or fixture is, on the full scale, and gives the necessary working dimensions or whatever other data the machinist needs to know in order to build the piece or the part. In other words, it is the drawing by which the workman does his work and to which he looks for his information. However, it is essential that the tracing itself be preserved for reference and therefore a blueprint is made from the tracing; this will be what the reader uses in his shop. The lines, numerals and letters on the original tracing or drawing are black on a linen background, but these appear on a blueprint as white lines on a blue background; hence the name "blueprint."

The importance of having large-size blueprints to work from, is that they simplify the reading or solving of the problem before the student. It is well also for him to understand that his large blueprint is a real and exact reproduction of the drawing shown in the book, that it is usually drawn to scale or larger, and that, if he implicitly follows instructions and dimensions as given in the blueprint, he is fortified in any argument which may occur over his work. If his work checks up with the blueprint, he is assured that there is no possibility of error.

Sectional Lines — In addition to the working lines and the dimension lines on the drawing views, the reader will, in some cases, find a series of parallel lines drawn closely together at an angle to the working lines of the view. These are known as

to finish burnishing reamers, etc. Diamond dust may be purchased, and its preparation as a lapping abrasive is simple. The diamond after being crushed to powder in a mortar is mixed with a high-grade olive oil. The mixture is allowed to stand five minutes, after which the oil is poured into another glass. The coarse sediment left is removed and labeled #0 for future differentiation. The oil poured from #0 is stirred, allowed to stand ten minutes, and is then poured into a separate glass; the sediment remaining is labeled #1. This operation is repeated until all the dust has been recovered from the oil. The time that the oil is allowed to stand is increased from 10 minutes to 10 hours for the #6 operation, and even longer or until it becomes clear. #0 or coarse diamond is washed in benzine and recrushed unless this coarse dust is required for some particular grinding operation. To the gunsmith the intelligent use of abrasives is an invaluable aid. It finds its most important expression in lapping shotgun barrels for increase of pattern, removal of pits or tool marks, as a final finish to rifling that adds the highest refinement in accuracy, etc. It is also the only practical means of evenly removing coatings of rust, provided this has not already worked its destructive process too deeply into the texture of the metal.

Lapping Chambers in Shotguns and Rifles—This feature will be explained more technically in a separate chapter. It would be well, however, because knowledge of the subject is so desirable, for the beginner to work on test pieces to gain experience. As an example, in a piece of steel, say 1½ inches thick, drill a $\frac{9}{32}$ hole and stone the cutting edge of a $\frac{19}{64}$ drill to a small radius, using this as a reamer for finishing. Then harden and remove the strain in the steel by passing it back and forth in the fire until unable to touch it without burning the hand. Let cool. Make a plug gauge to measure .298 inch in diameter from a piece of drill rod; it is not necessary to harden the gauge. Then construct a lap from a piece of $\frac{5}{16}$-inch brass, the same size as the hole, 5 inches in length. Undercut it back 1 inch from the end long enough to pass through the hole. With a hack-saw, split in the center, back 1¼ to 1½ inch, and spring it apart. Now start the lapping operation by either chucking the lap or the piece to be lapped. If same is chucked in a lathe, place a lathe-dog on the lap in order to hold firmly. Mix flour of emery with sperm oil until it forms a paste, and with a small piece of wood for an applicator, place what would be considered a reasonable quantity on the lap, and start the machine. Draw the lap gently back and forth from one end of the hole to the other, being sure to supply a sufficient amount of emery and oil to insure cutting, the machine meanwhile revolving at a moderate rate of speed. After a short trial cut, depending on how much stock must be removed, wash out the hole with gasoline, and check progress with the plug to see how close it measures. Continue until you are just able to pass the gauge through the hole. In this form of lap the ends are more or less bell-mouthed; nevertheless, you have accomplished a lapping operation with a form of lap that is used very often for jobs that do not require close precision work. For perfect diameters the standard lap arbor and copper or cast-iron laps are used, for the reason that their construction permits delicate expansion and proper charging.

When dealing with a taper hole it is necessary to make a cast-iron lap of the same taper as the hole on a straight mandrel or arbor. The lap proper is only a shell with a pin through it and the mandrel to hold it in place, but small enough on the pin so the lap can work freely during its performance.

Reamers and Their Uses — This is another important tool furnished in different types and styles, and in many cases capable of being used for a multitude of purposes. A working knowledge regarding its sphere is most desirable. The following list conveys an idea of the number used in one way or another in the building of a firearm: ball or cherry, burnishing, center, chambering, chucking, flat, half-round, hand, pipe, taper, shell, barrel reamers, etc. Each is of a different type according to the purpose it serves. I presume the reader knows that a reamer is a tool used to enlarge a hole that already exists, whether it is a drilled, cored, or taper hole, imparting to it the desired size and finish. In Volume II, Chapter IX, full details on the making of reamers will be given, but a preliminary understanding of their use will not be amiss.

There are one or two points to remember in the proper use of reamers which should be understood by every one, as for instance, providing a proper tap wrench the same as you would for a tap, and not attempting to make the same tap wrench do for all reamers. A small reamer should be used with as much care as a small tap, always with plenty of lard oil; for when a reamer becomes dry it tears out the steel instead of cutting it. In the use of barrel or chambering reamers the best grade of lard oil should be used.

Always watch the cutting edge of a reamer carefully to see that it does not pick up metal. When a reamer starts to do this, take a fine Arkansas stone and stone the top edge to the cutting point and also the face of the flutes, creating a keen edge which, after it is once brought

section lines and are used by the engineer to tell the reader that the part of the view covered by such lines is as if the work had been cut through and a portion removed. Chapter IX, Volume II, furnishes examples of section lines in the various figures it contains. Sections open up the interior of an object or a combination of working parts; as an example, the spindle of a drill press or an electric motor is sectioned to give a clear view of the inside. To use a homely illustration, the engineer seeks the same effect as the fruit peddler does when he cuts a melon in halves for the customer's inspection. A view so drawn is said to be sectional; hence the term "section lines." In the case of the drill-press spindle, some of its parts may be of steel, some of bronze, some of cast-iron. To show which parts are of cast-iron, of steel, or of bronze, the engineer makes use of various arrangements of sectional lines, each arrangement showing a different material.

Shaded Lines — It must be admitted that the average view of a piece of work on a drawing is a rather flat and dead thing. Some imagination on the part of the reader is needed to give it life—to make it rise from the paper and take on form and substance. Fortunately for a machinist who is just learning to read blueprints, much of his work comes to him roughly in the form in which he is to finish it. This is especially true when he is finishing ordinary castings. There are several methods used to give the blueprint more life. One much-used method is to make certain of the working lines of increased thickness to represent a shaded portion. These heavier working lines are known as "shade" lines and aid somewhat in making the view stand, or lift from the paper. Shade lines are used to a lesser extent now than formerly, as the mechanic is supposed today to use his imagination when reading blueprint views.

Line Shading — The term "shade lines" should never be confused with the term "line shading," which refers to a decidedly different use of lines. Line shading as commonly used consists of a series of lines placed on the view within its working lines and arranged in such a manner as to give a picture effect of the view. As in the case of shade lines, line shading is used less in machine-shop drawings than it formerly was.

Finished Lines — Another line used in drawings or blueprint views is sometimes termed a "finish" line. Such a line is usually broken up into dashes and dots and is then known as a "dashed" line. It is placed on the view close to a working line to indicate that the surface represented by the working line is to be finished. Dashed lines are now little used for this purpose because of the chance of their being confused with dotted lines used to represent hidden surfaces and edges, and other methods of indicating finished surfaces are popular, but eliminated in all the views shown in these two volumes. When dotted lines are shown they represent an inside hole, etc.

Certain conventions, as they are called, are often to be found in a number of drawings throughout the books. Screw threads, as an example, are shown in two ways: full thread, and parallel or vertical lines. They are seldom shown on a drawing as actual threads, but are "indicated" by an arrangement of parallel lines across and vertical to the surface which is to be threaded. A note is usually lettered on or near the threaded surface, giving the number of threads per inch and the form of the thread.

The careful reader of this chapter must now be impressed with the need of knowing things. The way to know a thing is to study it, just as a child studies his book when learning to read. The child first learns the simpler words, how they look, what letters of the alphabet are used in spelling them, and how the words are pronounced; and one who is willing to study this chapter and the drawings the books contain can learn how to read ordinary drawings readily.

It will help if you take a variety of simple drawings, with which you are more or less familiar, and select one for analysis, together with the part in your hand. Carefully study each drawing as well as the text, for in the first place you will become acquainted with good practise carried out by finished engineers, and in the second place you will, by this thorough analysis, train yourself to see in any drawing everything that was intended to be brought out better than words could express it.

Mechanical Drawing — The subject of mechanical drawing is of great interest and importance to all mechanics and engineers. Drawing is a method of showing graphically the minute details of machinery, tools, gauges, dies, etc. It is the language by which the designer speaks to the mechanic; it is the most graphic way of placing ideas and calculations on record. An inspection of any of these accurate, well-executed drawings gives a better idea of a part than a lengthy written or verbal description. The better and more clearly a drawing is made, the more intelligently the mechanic can comprehend the ideas of the designer. Thorough training in this important subject is

necessary to the success of every one engaged in mechanical work.

The draftsman or designer is dependent for his success to a certain extent upon the quality of the instruments and materials which he uses. As a beginner, he can often find a cheap grade of instrument sufficient for his needs, but after he has become an expert, it will be necessary for him to procure those of better construction to enable him to do more accurate work. If possible, it is better to purchase the well-made instruments at the start.

Paper — In selecting drawing paper, the first thing to be considered is the kind of paper most suitable for the proposed designs. For shop drawings, a manilla paper is often used because of its toughness and strength, as these drawings are likely to be subjected to hard usage. When a finished drawing is to be made, the best white drawing paper should be obtained, so that the drawing will not fade or become discolored with age. A good drawing paper should be strong, it should also have uniform thickness and surface, and it should stretch evenly and lie smoothly when stretched. The finer drawings are made on tracing cloth transferred from the pencil drawings and inked in. A linen tracing cloth should also be of the best grade, a grade which should neither repel nor absorb liquids and should allow considerable erasing without spoiling the surface. It is, of course, impossible to find all these qualities in any one paper or linen, as great strength cannot be combined with fine surface. However, a kind should be chosen which combines the greatest number of these qualities for given work.

The usual method of fastening paper or linen to a drawing board is by means of thumb tacks. Fasten the upper left-hand corner and then the lower right, pulling the paper taut. The other two corners are then fastened and a sufficient number of tacks are placed along the edges to make the paper or linen lie smoothly.

Drawing Board — The drawing board is usually made of well seasoned and straight-grained soft pine, the grain running lengthwise to the board. The experience gained in stock making should enable one with the use of wood-working tools to construct one of these very easily, in any desired width or length, together with the two horses to support it. Each end of the board is protected by a side strip, 1¾ to 2 inches in width, whose edges are made perfectly straight for accuracy in using the T-square. Frequently the end pieces are fastened by a glued matched joint, nails, or screws. Two cleats on the bottom, extending the whole width of the board, will reduce the tendency to warp. Drawing boards are made in sizes to accommodate the dimensions of paper in general use.

Pencils — Lead pencils are graded according to their hardness, the degree of which is indicated by the letter H, as HH, 4H, 6H, etc. For general use a lead pencil of 4H or 5H should be used, altho a softer pencil than 4H is better for making letters, figures, and points. The hard lead pencil should be sharpened so that when penciling a drawing the lines may be made very fine and light. The wood is cut away so that about ¼ or ½ inch of the lead projects. The lead can then be sharpened to a chisel edge by rubbing against a piece of sandpaper fastened to a wooden block, or even a fine file with the corners slightly rounded. Only a light pressure should be exerted on a hard pencil, as otherwise the chisel edge will make a deep impression in the paper, which cannot be erased.

Erasers — The little erasing necessary should be done with a soft rubber. To avoid erasing the surrounding work a metal eraser shield should be employed. For cleaning drawings when they are completed, a sponge rubber, or a preparation called "Art Gum," may be used, but in either case care should be taken not to make the lines dull by too hard rubbing.

T-Square — The T-square (which gets its name from its general shape) consists of a thin straightedge, and the "blade" with a short piece called the "head," which is fastened at right angles to it. T-squares are usually made of wood; pear and maple are used in the cheaper grades. The better woods, such as Honduras mahogany, are made with protecting edges of ebony or celluloid. T-squares are sometimes provided with swivel heads, as it is frequently convenient to draw lines parallel to each other which are not at right angles to the left-hand edge of the board.

Triangles — Triangles are made of various substances, such as wood, rubber, celluloid, and steel. Wooden triangles are cheap but very apt to warp out of shape. Celluloid triangles are almost exclusively used on account of their transparency, which enables the designer to see the work already done even tho covered with the triangle. Triangles from six to eight inches on a side will be found convenient for most work. Altho there are many cases where a small triangle measuring about four inches on a side will be found useful, every student should have at least two triangles, one having two angles

of 45 degrees and one right angle; and one having angles of 30, 60, and 90 degrees respectively.

Ink — India ink is always used for drawing, as it makes a permanent black line. It is obtainable in solid stick or liquid form. The liquid form is much more convenient but contains an acid which corrodes steel and makes it necessary to keep the pen perfectly clean.

Protractor — The protractor is an instrument used for laying off and measuring angles, and is made of steel, brass, horn, or celluloid. When made of metal, the central portion is cut out so that the engineer may see the drawing. The outer edge is divided into degrees and tenths of degrees. To lay off the required angle, use a very sharp hard pencil so that the measurements may be accurate. Place the protractor so that the two zero marks are on the given line, produced, if necessary, and the center of the circle is at the point through which the desired line is to be drawn.

Scales — The scales used for obtaining measurements on drawings are made in several forms, the most convenient being the flat with beveled edges, and the triangular. The scale is usually graduated for a distance of 12 inches. The triangular scale has six surfaces for different graduations and the scales are so arranged that the drawings may be made in any proportion to the actual size. For mechanical work the common divisions are multiples of two; therefore drawings are made full size, $\frac{1}{2}$ size, $\frac{1}{4}$, $\frac{1}{8}$, $\frac{1}{16}$, $\frac{1}{64}$, etc. If a drawing is $\frac{1}{4}$ size, 3 inches equal one foot; hence 3 inches are divided into 12 equal parts and each division represents 1 inch. If the smallest division on a scale represents $\frac{1}{16}$ inch, the scale is said to read $\frac{1}{16}$ inch. Scales should never be used as a substitute for the triangle or T-square in drawing lines.

Irregular Curves — One of the conveniences of the designer's outfit is the "French" or "irregular curve," which is used to draw curves other than arcs of circles with either pencil or line pen. This instrument is made of wood, hard rubber, or celluloid, celluloid being the best, and is made in various shapes. Curves drawn with an irregular curve are called free-hand curves. In inking curves, the blades of the pen must be kept tangent to the curve.

No drawing of a mechanical nature is finished unless all headings, titles, and dimensions are lettered in a plain neat type. Many drawings are accurate, well planned, and finely executed, but do not present a good appearance because the designer or draftsman did not think it worth while to letter carefully. Lettering requires time and patience, especially for the beginner, and many think it a good plan to practise lettering before commencing drawing. Poor writing need not necessarily mean poor lettering, for good writers do not always letter well. In making large letters for titles and headings it is often necessary to use drawing instruments and mechanical aids, but small letters, such as those used for dimensions, names of materials, dates, etc., should be made free-hand.

If the reader has fully comprehended the implication of this chapter, a fair degree of drawing knowledge may now be assumed, and he is ready to pass on to more complicated problems. When we turn to subjects in either the first or second volume, however, we find that a knowledge of geometrical figures and their properties is absolutely essential to a clear understanding of the problems chosen in gun making.

CHAPTER VI

Safety With Firearms

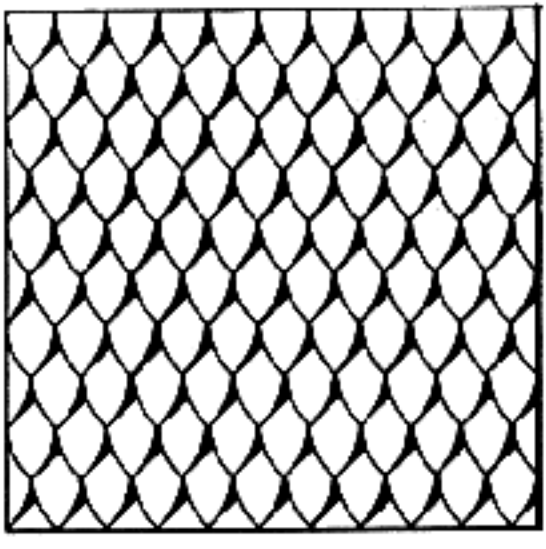

CHAPTER VI

Safety with Firearms

IT MUST be realized, especially by the amateur starting to remodel guns and rifles, that firearms bear a close relationship to the ammunition they were designed for and that few of them can be "stepped up" to the use of later and more powerful loads. If one will consider the tremendous increase in pressures that has been obtained and keep this firmly in mind, it will govern him wisely and safely in his experiments. No one in his right senses would put a steam pressure of 300 pounds upon a boiler designed for 50 pounds, yet men will strangely insist on doing this very thing with firearms. Take for instance the fine old Krag rifle—why was it set aside and a brand-new rifle adopted? Because it was not a clip loader, and was only designed for a maximum chamber pressure of 42,000 pounds, while the advance in ballistics provided a new cartridge, and the .30 caliber model, 1906, required a rifle capable of withstanding *five tons* more pressure than was provided for in the Krag. Not only was a much superior grade of steel needed, but a new and different breech action, stronger in every way, was imperative. Now because these pressures are maximums, it is possible to overload a rifle and get away with it at times, but remember you are flirting with death or disablement when you attempt it; and if you deem this price too high, be ultra careful with pressures and always err on the safe side. Figure 47 will show what happens when one makes a careless mistake.

Because of the limitations of weight, few guns carry more metal than necessary, but this is of the best quality and is scientifically heat-treated to secure the utmost of its inherent strength and stability. Remember, if you disturb this "temper" in your experimenting or changing, and do not know how to restore it surely and absolutely, you have weakened your gun to a dangerous point and rendered it unfit for the pressures it was made to withstand. The same thing applies to the removal of metal at vulnerable points. To insure your safety as well as the other fellow's, let us here consider a few rules that must never be broken.

1. *Do not* draw the temper of receivers and breech actions unless you know how to restore it scientifically and surely.
2. *Do not* attempt to weld or even braze appliances to any part of an action or receiver.
3. *Do not* remove metal from any point of an action which is involved in the stresses of explosion.
4. *Never* permit a cartridge in a gun in which the locking mechanism is faulty.
5. *Be cautious* in the remodeling of a gun to the use of a more powerful load than it was originally designed for.

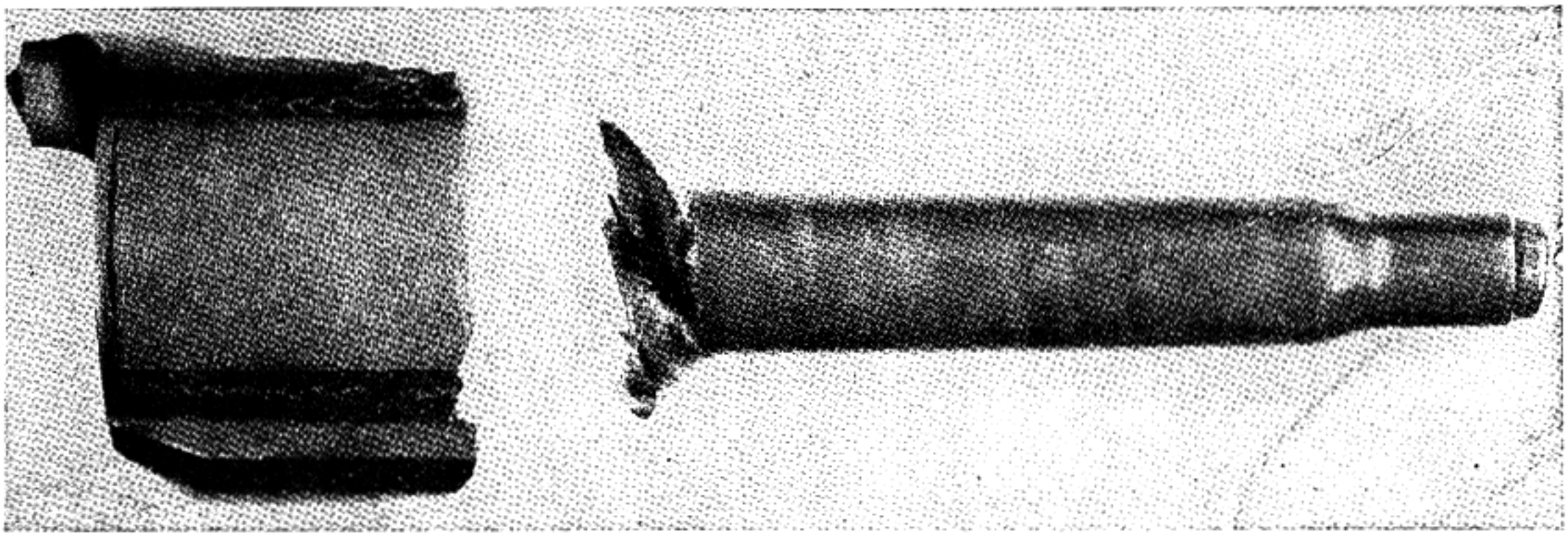

Fig. 47
A Springfield rifle that blew up because of carelessness. Heavy grease in chamber and barrel, plus excess headspace and a soft cartridge case—a perfect combination to cause such accidents

6. Remember that in ninety-nine cases out of one hundred the higher pressures, velocities, and power attainable in a rifle are not required for any work you will call upon that rifle to do.
7. Remember that in a shotgun, unlike a rifle, higher pressures add very little to range or power.
8. *Do not* spend a moment on a firearm which is to be actually used, that is not substantial, correctly designed and made, and capable of being restored to its needed strength and utility.
9. Remember that the dividing line between black and smokeless powders and lead and encased bullets is a deadline, and marks an abrupt transition in the design and make of firearms. *Never* compromise this deadline.
10. *Never* say "good enough" in firearms. If you can't say "right," put the job in the antique cabinet, or, if broken, in the junk pile.
11. Eschew makeshifts. You have seen hundreds of them just as we have. All our marvel has been that they worked. We never expected they would, and some time they *won't*. Take the makeshift firing pin; did you ever stop to think what would happen if this makeshift *pierced* a primer?
12. Watch trigger pulls. The trigger is the spark that fires the mine. Learn and teach how to press a trigger that offers safe resistance rather than reduce a pull to a point that endangers safety.
13. Remember in conditioning old muzzle-loading rifles for use that you cannot get advanced power or accuracy out of these old guns by modern propellants or heavier charges. Stick to and advise a rigid adherence to the old black powder and the bullet that belongs with such rifles.
14. It may seem strange, but people often leave charges in guns; therefore, habitually make sure a gun is *empty* the moment it touches your hands. If it is loaded, always unload it, never shoot the load out.

Modern developments have made firearms as safe as any other mechanical device that we utilize today. The automobile, for instance, is in itself a fairly safe means of transportation, yet it has taken toll of countless lives, and statistics will show that the greater percentage of these have been caused through sheer carelessness.

There are many cheap and obsolete shotguns in circulation that should be discarded or thrown in the scrap pile. Many of the old guns have been handed down from generation to generation. Naturally, there is a certain sentiment attached to them and their preservation is admirable. However, we should be able to discern between sentiment and danger. It is a pity, in this respect, that we do not feel as the Chinese do toward their ancestors; for then it would be sacrilege to use their personal possessions. It would at least prevent a number of accidents that are incurred from using antique arms.

One day a man came into the shop with an obsolete double-barreled hammer gun on which he wanted the forearm replaced. Naturally the cost of the replacement was prohibitive, for he could purchase a modern gun for less than the price of a new forearm. Upon examination of the gun, I found that when it locked, the barrels could be raised from the action $\frac{1}{16}$ inch. There was also an opening of $\frac{1}{32}$ inch between the barrels and action. I advised him to discard the gun and to purchase a new one for his own safety. My warning only caused him to become very indignant and he informed me, not very politely, that he had used it in its present condition for two seasons, and expected to use it several more seasons, as he simply held the barrels and action together while firing! I will let the reader draw his own conclusions as I have mine.

Every now and then some misguided person replaces a broken firing pin with a common wire nail, instead of sending the arm to a gunsmith for repairs, or to a machine-shop where they have the proper tools to pattern one after that which has been broken. I can name any number of such cases of gross neglect, where a person could not foresee the results of a sharp-pointed nail piercing a primer, causing the gases to rush out at the time of ignition, and force the nail back into the shooter's face. If one should happen to see another using such a combination, the law of safety should be explained in language that a church member would not care to hear.

When changes are made, such as using one of the old single-shot actions for modern high-velocity ammunition, be very careful to see that all parts fit well, particularly the block where the firing pin is located. For instance, in fitting a new barrel for the .22 Hornet cartridge, or even using the old Winchester single-shot action that originally came for the .22 Winchester center-fire cartridge, since this is a lead bullet and a low-velocity cartridge, the firing pin or firing-pin hole is over $\frac{1}{8}$ inch in diameter in the block. It is then our first consideration to turn the firing pin and bush the hole so that it measures from $\frac{5}{64}$ inch to $\frac{3}{32}$ inch in diameter. Our better judgment will tell us, after measuring the primer, that between the primer and firing pin there is only a little over $\frac{1}{32}$ inch left on a side to hold the primer in place. This may be enough to hold the primer, but if the firing pin is soft, and it

develops a point that will pierce the primer, there is enough pressure developed to send the escaping gases back into the shooter's face, causing a painful injury and possible loss of eyesight. By all means, figure out the area of the primer and the firing-pin hole and let the results prove to you that there is present enough metal to hold back any gas that should escape from a pierced primer.

The deeply interested person will study the development of powder from the early Middle Ages up to the present improved military powders used in high-velocity ammunition. All the large powder companies distribute tables of the correct powder charges to use in certain cartridges and the weight of bullets. Still, some disregard these tables and add just a little more to obtain a higher velocity than the other fellow.

I recall that when I was at the Arsenal, tests were made with the armor-piercing bullets against armor tank plates, and the different light plates were carbonized to certain degrees of hardness. These tests were conducted on the artillery range. The plates were placed in a frame and the Model 1903 Springfield rifle in a machine rest. The regular armor-piercing ammunitions would not penetrate some of the heavy carbonized plates, so ammunition was loaded with the standard improved military powders, such as Du Pont No. 15, 15½, 16, 17½ Pyro, or No. 20, and also the later improved powders under other numbers. The recommended loads were increased by one grain at a time, in order to have the projectiles go through the heavy plates. With Du Pont No. 16, one of the fast-burning powders, a load of sixty-one grains was reached which blew up the rifle. The action held, but the case blew out the rear, allowing the gases to escape into the magazine, opening the magazine on the sides, and splitting the stock from the front sling swivel back three or four inches from the comb, completely shattering the wood. The same thing is likely to happen if only one or two more grains than the given charge are added.

I have had much of this brought to my attention. Men have brought in cartridge cases, after firing, showing the bad primer bulges, and even the primer flowing back into the firing-pin hole. Naturally, they condemn the cartridge cases, but upon questioning them I find that they increased their powder charges one or two grains. Talking seems to be of little value; it is only through bitter experience that they will ever learn or accept the truth.

At the present, there seems to be quite a fad for using old muzzle-loading rifles, and they are loaded with every kind of charge, from the military powders to the black powders. These old guns are only made of common wrought iron, a grade about ten degrees lower than the common machinery or cold-drawn steel used today, and even an overcharge of black powder is more than they can stand. One was brought to my attention on which the nipple plug was blown out and just escaped hitting a person standing at the side of the shooter. I learned that E. C., a quick-burning shotgun powder, had been used, as it was much cleaner than the black powder which left too much residue in the barrel.

As we know, excess grease or oil in a barrel or chamber will cause the first shot to be high. It not only runs the pressure above the allowable pressure recommended, but may cause excess head space between the bolt and cartridge cases. Very often you will find a soft case among the ammunition you are using. A soft case is one which was lodged in the drums of the annealing furnaces and probably stayed in the worm for half a day. The furnaces are of the rotary type with spiral drums feeding the cases in one end, and by the time they reach the opposite end they have the proper annealing for the following draw. This seldom happens, for such conditions are watched very closely, and when a furnace shows the least defect, it is remedied. Still, there may be such a condition existing, so it is best to use every precaution. Check your rifle for head space and make sure that all oil or grease is cleaned out before firing.

Such a small obstruction as a cleaning patch placed in the muzzle of a rifle to protect the interior from moisture, and negligently left there, will split the barrel from muzzle to chamber. When a bullet hits an obstruction of this nature, it may be compared to a swiftly moving box car that hits another which is at rest, except that there is a propelling force of gas behind the bullet, and this sudden stoppage of the projectile hitting the obstruction sends the gases around the bullet, thereby opening the steel to allow its passage. Even the .22 caliber short rifle cartridge will ring or bulge a barrel when it comes into contact with the lodged bullet. If these small bullets can do this, you can imagine what a high-velocity cartridge would do.

The first thought that occurs to one, when a bullet or part of a cleaning rod is lodged in a barrel, is to shoot it out by removing the bullet from a case and inserting the case by holding the rifle in a vertical position so that the powder will not scatter around in the working parts of the action. It is possible in this manner to remove an obstruction when it is only lodged a short distance in the barrel from the chamber end. The instance of bursting a great distance from the chamber is due to the air space that is compressed with the gases which are greater in velocity than the movement of the obstruction; the whole expanding force of the gases and air concen-

tration at that point expands the barrel. If it is not possible to take the gun to a gunsmith, it will be best to remove the bullet, together with half the powder charge, and try to shoot the obstruction out, rather than spoil a long anticipated hunting trip. This, however, does not apply to a shotgun, for you will most certainly have a burst barrel and a ruined arm.

Many pistols and revolvers are also ruined in this manner. A .45 Colt automatic was brought to my attention which had exploded in the shooter's hand. The bullet was lodged half-way in the barrel, so he tried to shoot it out. The barrel opened at the bottom, split the underside of the frame, and folded it back to the trigger guard. It also blew the spring and guide free from the action. At times, it will only bulge a barrel (of course practically ruining the arm), but usually it means a completely ruined revolver or pistol.

Very often, there is improper head space between cartridge head and bolt or breech block. This condition will manifest itself by the parting of the cartridge case about one-half inch from the head. At first a rupture will appear, which is the first indication of excess head space in a chamber. Upon examination you will find, when the bolt is in the firing position, that too much space exists between the head of the cartridge and the face of the bolt; you can detect this condition by inserting shims of brass or copper. A good many Mausers have this defect, particularly the actions which were sent over after the war and made into sporting arms; also the large magnum actions that came over in the white and were never heat-treated before being made into rifles of the .375 and .275 calibers. The Springfield rifles or any other rifles using high-velocity ammunition turned out by the private arms companies have the correct head space, as they use gauges to determine this chambering to the minimum length; and since they have a rigid inspection in such factories, there is never any danger of this defect. When there is only 0.004 inch tolerance, it necessitates picking out a number of cases in order to come to some conclusion as to the proper head space.

The most prominent defect of the Model 95 Winchester rifle using the Model 06 ammunition, was that the frame of this arm spread until the cartridges parted in the chamber; as a result it was necessary for the Winchester Repeating Arms Company to discontinue this model. There are still a number of them in the hands of American sportsmen, but sooner or later they open up to such an extent that they are discarded.

When a barrel wears out on a high-velocity rifle, many persons with limited means will look around for bargains, and of course, nine times out of ten, they never get a barrel to fit the action they have. Following the various suggestions of their friends, they either sweat or shrink a collar on the chamber end and then thread the barrel to fit the action. If you will conduct a little experiment of your own, it will demonstrate better than any description, just what results will follow from doing this. Take a test piece of the same size, with the same hole in the center. Sweat or shrink a collar to this piece and then take it to a place where they have a good hydraulic press and you will be surprized to learn what little force it requires to tear them apart. In a high-velocity arm there is a pressure of 50,000 pounds developed; by adding 50% for a margin of safety you will note that such an operation falls short of these figures. Do not think that the amateur alone is responsible for these ideas. Far from it, for generally they originate from others that are in a position to know better. The first .50-caliber gun which came to the Arsenal from the Springfield Armory had just such a collar shrunken to the end of a .50-caliber barrel, and upon the first shot for velocity, the barrel was stripped from the collar and landed seventy feet down the range. They had made doubly certain of the shrinking operation by placing taper pins on each side. These were sheared off as clean as tho cut by a chisel. Picture what damage would occur to the shooter's hand by a barrel breaking loose from a receiver in the act of firing.

The man capable of becoming proficient in the handling of firearms will require no special rules for his government in this matter. Rules are for the careless individual, and yet one could give such a person a book full of them and he would then find something that no one else has ever discovered.

CHAPTER VII

Selection of Woods

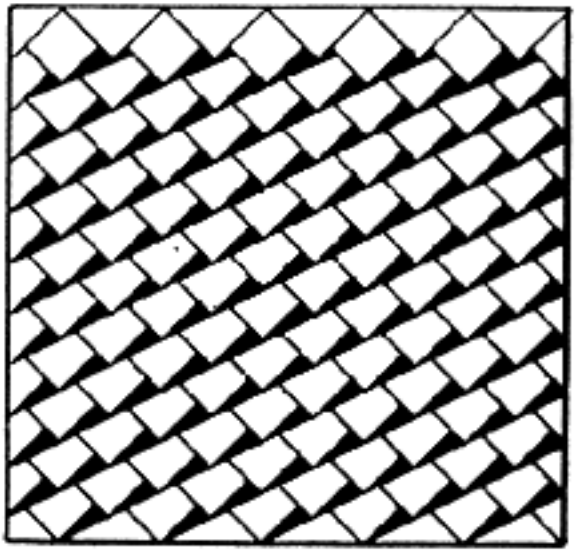

CHAPTER VII

Selection of Woods

THE conditions governing the selection of wood for gunstocking are so exacting that one's choice in the matter is practically determined in advance. The wood *par excellence* is walnut, and there is no substitute. Walnut seems to be purposely designed for gun stocks. No other wood or material possesses all the qualities that are demanded by the gunsmith, and nothing better could be desired. The growing scarcity of this wood, especially the European varieties, which have been drawn upon for centuries, has caused intensive search to be made for substitutes, and the forests of the whole earth have paraded their finest growths only to have it more firmly demonstrated that walnut is king of them all.

The chief qualifications in the wood to be used for stocking are as follows: It must be tough and very strong, for gunstocks are much cut up by the mechanisms and yet have to endure not only the shocks and stresses of explosion, but the hard uses that are inseparable from hunting and the battlefield. It must be homogeneous and fine in its grain so that it may be worked down to an exact fit without splintering. This is particularly apparent when one is inletting the locks of a side-lock gun. It must be a wood that, when thoroughly seasoned, will "stay put" and not be subject to further warping, shrinking, and twisting. It must be a wood which withstands the rotting effect of lubricating oil, for lubricants and rust preventives are indispensable and continuous. It must be, in spite of its strength, of moderate weight, for balance is one of the prime requirements in a gun and this cannot be secured in wood that is too light or too heavy. Last but not least, it must have beautiful grain if it is to please the eye and satisfy perfectly. Strange and wonderful as it may seem, walnut, at its best, is supreme in every one of these qualities, and furnishes the greatest ornament you can place on a gun—its own natural, inimitable beauty.

There are a number of species of the walnut tree, several of which are indigenous to America. That species, however, which yields the nuts which we call English walnuts, is by far the best. Its botanical name is *Juglans Regia*, and it is native to all the Central and Southern European countries and that portion of Asia which we designate as Asia Minor. It was brought to America by the early colonists, and, while not hardy generally north of Washington, D. C., there are still numbers of these trees scattered through the Northern States. Undoubtedly, hardy varieties of *Juglans Regia* can and will be developed that will thrive wherever the apple and peach can be grown. Within the last few decades this so-called English walnut has been extensively planted in California and all our nuts and eventually our gun stocks will be home-grown.

Actual English walnut, that is, walnut grown in England, is practically non-existent so far as the gunsmith is concerned. There is indeed a limited supply, and it is good, possessing all the best characteristics of the wood, except the very finest figure; but the bulk of the best English walnut comes from Southern France and Northern Italy, together with other supplies from Eastern Europe and Southwestern Asia. That known as "Circassian" is from the last-named countries and is a very beautiful wood, showing perhaps the most splendid markings of all. However, it is not generally cut and handled so well as that grown and cut by expert foresters in Europe, and for this reason it is hard to get blanks free from preventable defects.

Our American black walnut, botanically *Juglans Nigra,* is a most useful variety and furnishes the stocks for practically all our commercial sporting and military firearms. With the one exception of *Juglans Regia,* it is the best stock wood extant. It is not generally as well figured as the European variety, but the most beautiful stocks are frequently obtained by grubbing out that portion of the tree where the roots and trunk join. These are the source of the "fancy" stocks furnished by our leading gunmakers. Black walnut is a dependable wood and fortunately relatively cheap (it would be a calamity not to have a constant supply available for all time), but it is not—for we must not assume that all of the great Creator's masterpieces are confined to our country—nearly as good a stock wood as its European congener. I am quite sure of myself when I say that you, Mr. Amateur, will do a much better job in much less time if you use the more compact, yet more easily worked,

European walnut. When machinery does all the cutting and profiling, the case is not quite the same, as a lightning-speed spiral cutter does things in inferior woods that hand tools only accomplish laboriously and slowly.

The seasoning of wood is well understood professionally, and great advances have been made, especially in our own land, in artificial drying. For most purposes this quick method serves well, but where all the latent strength of the timber is to be preserved it is not nearly as good as the slow and more expensive natural seasoning. Time and fresh circulating air always do the best job.

One of the chief causes of the high price of imported blanks is this expense of seasoning. It means, in the first place, a dead investment for several years, necessitating suitable storage facilities, constant inspection, and frequent handling. The walnut forester has learned how to cut stock blanks to the best advantage and he simplifies his transportation and saves freight or wastage by doing this on the ground. These blanks are sold to visiting buyers largely from Liverpool, England, who grade them and store them for partial seasoning ready for later distribution to the trade. There is quite an art in this preliminary seasoning, and it is remarkable how clearly the expert distinguishes the hidden beauty in an ordinary-looking blank. Moreover, the preliminary seasoning calls for definite knowledge, for this is the really critical stage. Excessive dryness of atmosphere would be fatal. At times artificial humidity must be provided. The ends of the blanks must be coated with some sealing material such as paraffin, paint, or specially mixed creosote to prevent too rapid shrinkage, and the butt ends kept from the light.

The gunmaker, having bought his supplies from the dealer, now continues the seasoning to the point of completion. This is practically only a question of time, and so each batch is dated and set aside for a period well in the future. As the time of use draws nigh the blanks are weighed at intervals, and not until they have become static are they deemed thoroughly seasoned and ready for use. All this has doubled and trebled the original value of the wood, so we see very plainly why perfect stocks cost so much money. This is particularly noticeable in one-piece stocks where so much more attention has to be given to the direction of the grain and the continuity of the figure. This accounts for the apparent discrepancy between the price of rifle and shotgun stocks. It is very easy to obtain, in the smaller piece required for a shotgun butt, the choicest figure; but when you double the length and ask for ten times the strength your demands are far greater. Figure 48 illustrates shotgun butt stocks.

A great many of you, I fear, will for various reasons be compelled to get your stocking wood locally and of local material. By all means get walnut if procurable. If you expect to make a number of stocks, buy a supply that you can cut up and lay aside for complete seasoning. Don't get your plank too thin. To get straightness and cast-off in the right direction you will require a 2½ inch raw plank. Do not cut the piece into blanks until it is air-dry. It should be at least a year-old plank. Store your blanks inside—a loft over an outbuilding is good, and it is well to start a rack overhead in your workshop to finish their drying.

There are many features that contribute to the great difference in the quality of walnut. Rich soil hardly ever produces beautiful figure; the tree has grown too swiftly for that. Figure, like virtue, seems to be the product of struggle, of adversity.

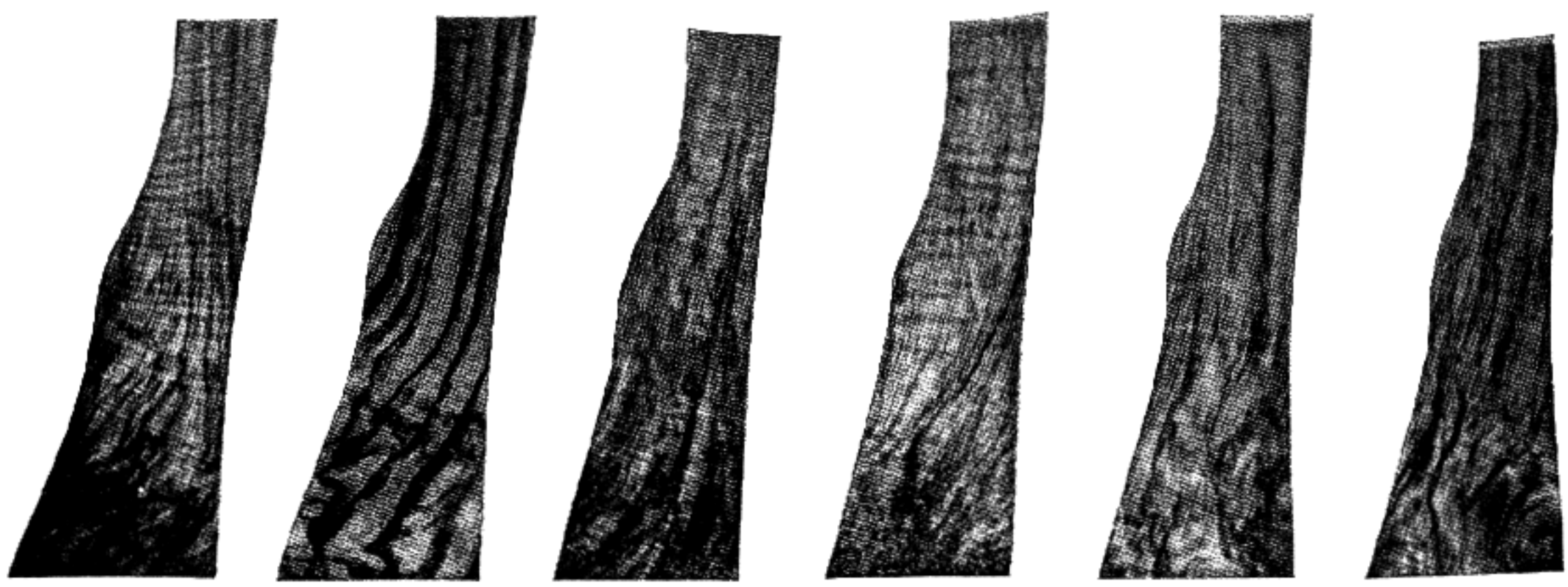

Fig. 48

Shotgun stock blanks, furnished by Mitchell Bosley of Birmingham, England. Circassian and French walnut

Climate also has its effect. The walnut tree in the Middle States is the largest and cuts up into the best merchantable lumber. Rarely, however, does this have the closeness of grain and the firmness of texture that is found in the lumber of the hotter and dryer Southwest. Walnut grown in high, well drained soil is invariably better than that grown in swampy ground or river bottoms.

So, as far as you can, be very "persnickative" in your wood, getting the best procurable, and however strong the temptation, do not use a piece, ever, until it is as dry as the proverbial bone. Good stocking is the acme of all our wood working. You will get more real satisfaction out of this phase of gunsmithing than anything else, if you do it splendidly; so start without handicap.

In choosing a particular blank for a specific arm, you will have to keep balance uppermost in your mind. A heavy gun forward will require weight at the butt, and you will need a dense stock; while on the other hand, a light, lively weapon, such as a small-bore shotgun, will need a light butt-stock. Weight of stocks cannot, however, be entirely controlled by the wood itself, and it is quite permissible to reduce butt-weight by boring cavities under the butt-plate. This in no way weakens the stock. By artificial weighting in the same place, balance can often be improved.

Be very careful, in selecting your stock blank, to see that it is free from shakes and checks. The former are caused either by wind strains in the growing tree or by carelessness in felling the tree; checks, on the other hand, are the result of too rapid drying. Both defects have an unpleasant habit of getting worse rather than better as you work your stock down, owing to the fact that you are relieving them from the support of the surrounding wood; so be careful to ascertain the depth of these defects before placing a lot of work on your stock.

There are a number of British firms who supply stock blanks and who will send by parcel post to your door just what you order. The price charged is based entirely on the quality, and you will be treated with absolute fairness. There is no duty on these blanks. Our outdoor journals also carry

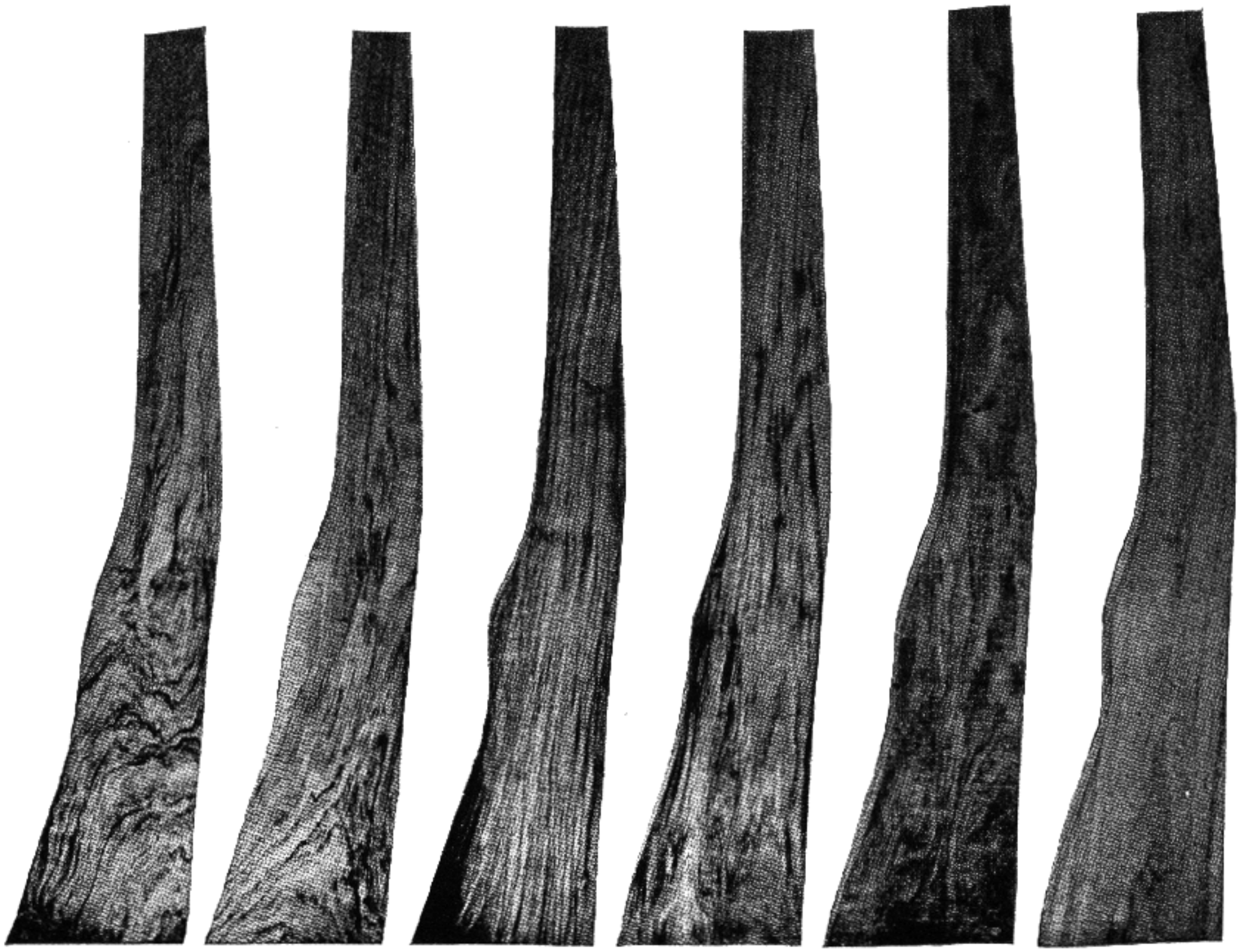

Fig. 49
Rifle stock blanks, furnished by Mitchell Bosley, of Birmingham, England

advertisements of several American purveyors of seasoned blanks of American wood. I have found these equally reliable. Figure 49 illustrates rifle blanks.

There are a number of our native woods which have been used at various times for gun stocking. The early American gunsmiths were partial to hard maple, especially when they could obtain those beautiful freaks of nature which we call "curly maple" and "bird's-eye maple." There was good reason for this. Maple has many valuable characteristics; it is strong, close-grained, and in its own particular way, handsome. With a profusion of brass trimmings it toned quite well. It does not harmonize nearly as well, however, with the blue of our modern steels and colorful case-hardening. Its light color makes it a bit too conspicuous in the woods, and in my opinion it gives up most of its beauty when stained to a darker color. It does not tone down attractively by age, and it is particularly susceptible to the rotting effects of lubricants, soon becoming "dotey" when impregnated.

The selection of a wood depends upon the personal taste of an individual. Some like the American black walnut, others the foreign walnut, and still others admire such woods as cherry, apple, mahogany, maple, etc. A list of all the woods, not only for gun stocks, but inlays and cabinet work, etc., may help the reader to make better selections. Some of the woods can be used for experimental purposes.

The weights given in this chapter on woods are the weights per cubic foot in pounds. The ideal weight of wood for a gun stock is between 37 and 48 pounds per cubic foot. All substances are judged by this method, and the gunsmith must also judge his stock blank by this rule. All figures are taken in the dry state.

Almond Wood — Weight 42 pounds. Cuba. In texture, weight, and general character it reminds one of Cuban mahogany, but differs greatly from this in its color, which is grayish-brown and is marked with bluish streaks. All blanks display a more or less wavy and curly grain, with those forms of rich figure that are commonly designated as "roe" and "splash mottle." A very fine wood when one wishes something a little different in a presentation stock.

Amboyan — Weight 39 pounds. Borneo. The name *Amboyan* or *Kiabora* wood is applied to certain burrs imported from the Moluccas (including Amboyan) and Borneo. The wood is brown, tinged with yellow or red, but changes with age to a dull brown-leather color. It is marked with little twisted curls and knots in a manner similar to, but more varied than, bird's-eye maple. With the naked eye it is difficult to distinguish between the burrs of Amboyan wood and Thuya, or even yew; but tho the burr wood of the yew is similar to that of the other two as regards color, it is, nevertheless, unlike them in all other respects. Amboyan wood has been freely utilized in the manufacture of ornamental or costly furniture and for the interior decorations in motor cars. This wood is very fine for decoration on firearms such as forearm tips, pistol-grip caps, and inlays. It is rather expensive in large pieces.

Beef Wood — Weight 59 pounds. British and Dutch Guiana. The wood from British Surinam is the best quality. It is a dull plum-red color and in this respect somewhat resembles raw beef. It is a very durable wood and stands exposure. It is one of the best woods for cleaning-rods, handles, and other useful articles, because when it is turned thin it is still very strong.

Apple — United States. This has its individual qualifications. It is a very close-grained wood and most homogeneous. It inlets beautifully because of its matted fiber. It works well and is a strong wood, but has no natural beauty, being neutral in

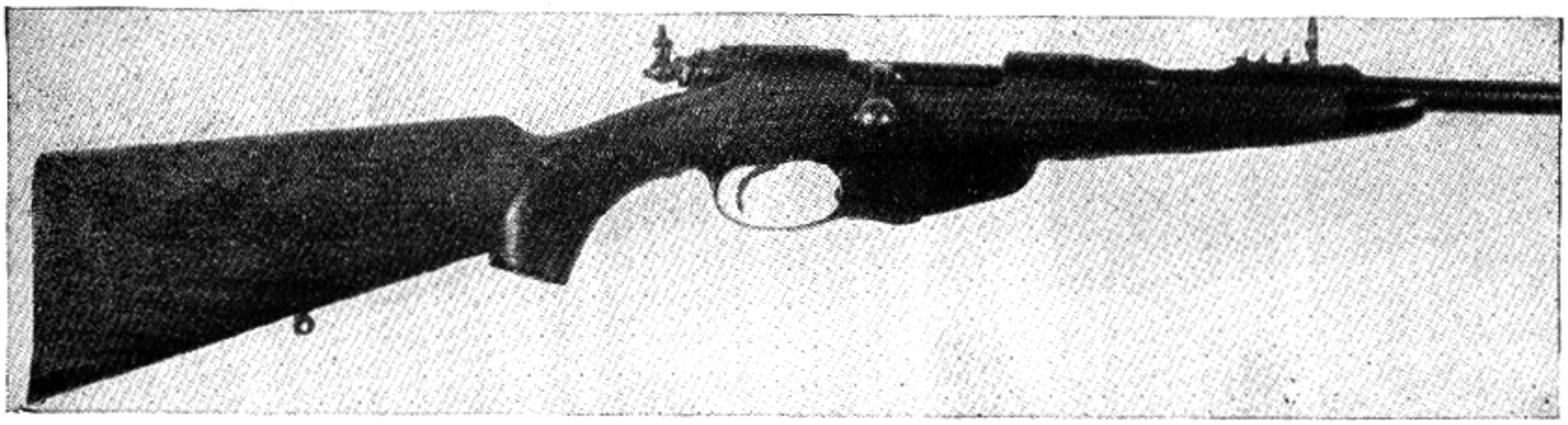

Fig. 50
Caliber 6.5 mm. Steyr action. Twenty-six-inch barrel made by Rigby. Stock of plain French walnut

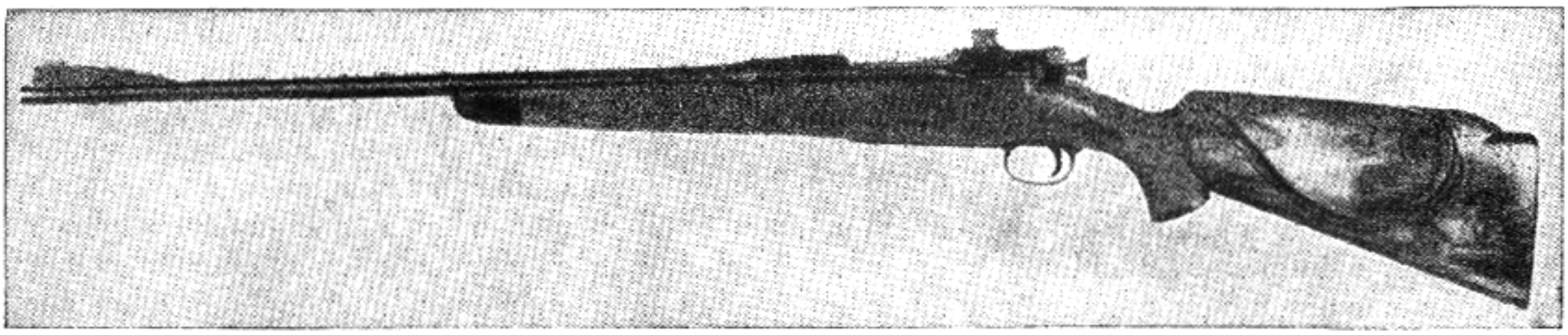

Fig. 51
Light caliber 30-06 Springfield designed by Dr. George Quay. Weight, 6 pounds 14 ounces. Stock of Circassian walnut with much character. Small knot-holes were filled with ivory

color and devoid of ornamental grain or figure. It is not on the general market and consequently is hard to come by.

Bedd — Weight 46 to 58 pounds. India. The heart wood is very dark red, very hard and close-grained, beautifully mottled with light and dark, i.e., black and orange streaks. It seasons well, works and polishes admirably, and is distinctly one of the finest and most beautiful woods in India. This wood can be used for a stock on a rifle or shotgun when one wishes something just a little different.

Benteak — Weight 53 pounds. West coast of India. This wood is a warm brown color similar to that of black walnut, and has a smooth close texture and straight grain. It is highly suitable for decorative furniture and gun stocks, and could be used where black walnut is required. This wood will take checkering very readily.

Blackbean — Weight 40 pounds. New South Wales, Queensland. The merits of this timber are well known in Australia, and some of it is sent over here and sold as myrtle for gun stocks. Blackbean or *Castenosper Mum Australe* has an attractive appearance showing various shades of brown traversed with black streaks, and is often beautifully mottled so that it resembles slightly bleached East Indian walnut. A gun stock of this wood is rather beautiful. It works well with edge tools.

Blackwood, African — Weight 89 pounds. Tropical Africa. This is a dark purple plum-colored wood, now imported from Mozambique and the east coast of Africa, known for this reason as Mozambrane ebony. It is mostly suited for turning, as it is very hard, close, and free from pores, but not destructive to the tools. When they are in proper condition the wood receives a brilliant polish. It is considered free from any matter that will cause rust. On this account it is used for the handles of surgeons' instruments. It is used also for fine inlay work on firearms, forearm tips, pistol-grip caps, handles for fine tools, and grips for side-arms.

The blackwood of Australia is just half the weight of the African blackwood, and in color it varies from a rich reddish brown to nearly black, banded with golden brown; sometimes it is brown and red with dark streaks, and may show a metallic luster. Its grain is close and often curly, and it appears to be somewhat cross-grained, so that the wood often shows a beautiful figure and mottle. This class of wood is used more for fine cabinet work when one wishes a dark wood in an exceptionally fine product. This is one of the strongest woods, and can be successfully used in many ways when strength is required.

Beech — United States. This has probably been the commonest substitute for walnut in gun work by backwoods gunmakers. It was a very usual wood in the old military muskets of muzzle-loading days. It is a serviceable wood for its strong qualities. It is of proper weight, and has an interlaced fine grain that permits close work without danger of splitting. It is neutral in color and devoid of natural beauty. It is purely utilitarian and is never used when better woods are available.

Birch — United States. This, like cherry, has many fine characteristics. It is a strong, firm wood, pleasant to work with and amenable to a good finish. It is generally available in seasoned stock; sometimes a freak plank displays good markings, but this is unusual. It has no natural beauty, but can be stained to the color of walnut or mahogany very readily and successfully. Staining, however, requires a varnish finish, and this is not to be recommended.

Cherry — Weight from 33 to 45 pounds. United States, Europe, Asia Minor. This wood when first cut is light red or pink, has a close firm texture, and is capable of a very high surface polish. It is mostly used for chair making and for the backs of

brushes when stained with lime, oiled, and varnished. It is also used for common and even the best furniture. The wood of the blackheart cherry tree is considered the best grade. This wood was used by the early American gunmakers. There seemed to be a fad existing between 1830 and 1860 for cherry stocks on the muzzle-loading rifles of those dates, when these rifles were made by the backwoodsmen themselves. Cherry is a much easier wood to work than curly maple. I have seen a number of such stocks on these antique arms and could not help but admire their beauty, as the workmen had finished the wood by various methods. Today, with our advanced knowledge of woods, we would not care to stock a rifle with a cherry blank.

Wild Cherry—Weight 41 pounds. United States. This too had its admirers, and when it was plentiful, which it was until thirty or forty years ago, there were opportunities to select pieces of good color and texture which made rather good stocks. Wild cherry is a hard firm wood with little grain, and it is a delightful wood to work with, as it cuts clean and takes a good polish. It also, when dry, is very stable. It is not a strong wood, usually has very little figure, is often marred by "gum pockets," and nowadays is scarce in most markets.

Cocobolo — Weight 85 pounds. Tropical South and Central America. The striped heart-wood shows alternately bright orange and deep red bands, the latter being often streaked with dark or even black veins. Its rich, handsome appearance sometimes has the effect, both as to color and markings, of tortoise-shell. It is hard and heavy and yields a fine finish. When well polished this is a bright wood and is used for such parts as forearm tips, inlays, pistol grips for revolvers, also handles for fine tools.

Curly Ash — Weighs 38 pounds. United States. This is a most beautiful wood when you can find one of the logs which exhibit this unusual but marvelous figure. Ash varies greatly in its weight and denseness. It is a strong wood for its weight, and this is why it is in universal use for implement handles. It is usually coarse and straight grained, two characteristics which make it unfit for a good stock wood. It is also light in color and so is generally unpopular in gun work.

Ebony, African — Weight 78 pounds. West Coast of Africa. This wood is sent over in billets and short logs with the centers left in. The billets are from about 5 to 10 inches wide and from 2 to 7 inches thick, the logs from 2 to 13 inches in diameter. Gaboon is a good black ebony of fine grain. Ebony is a handy wood to have around the gun shop, for it is possible to do so many inlay jobs with this black wood, particularly when used with ivory to offset the wood. You can not make a more beautiful pistol grip of any other wood when you inlet elongated pieces of ivory about ⅛ inch wide through the center of a cap, for it stands out so distinctly with an ivory center.

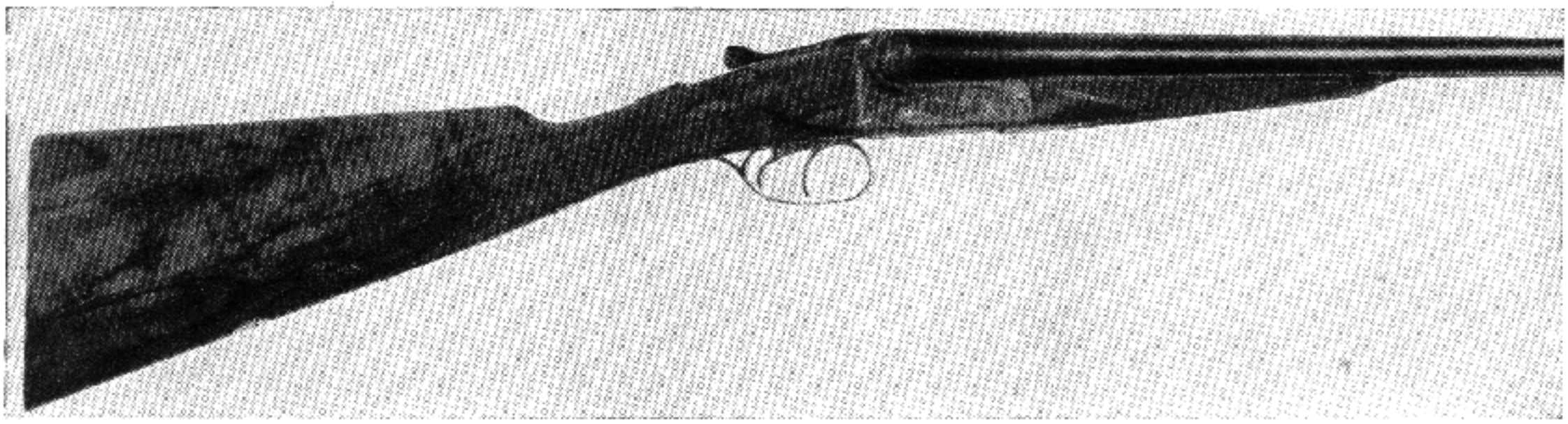

Fig. 52
William Ford 20-gauge double. Restocked with beautiful piece of French walnut of unusual figure and color, and perfect markings on both sides

Holly — Weight 47 pounds. Europe. This wood is white to gray in shade, is exceedingly close-grained in texture, and capable of a very light surface polish. Holly is chiefly valued for inlay work and is the whitest and most costly of woods. When fine walnut is inlayed into holly it gives a fine contrasting effect.

Mahogany — Africa, Cuba, Central America, Honduras, West Indies. This wood might suggest itself to many of you, owing to its universal appeal in the best cabinet work. It is easily the king of cabinet woods. It has, in some varieties, the utmost beauty in grain and color, ranging from

light cherry to reddish brown, and is reliable, for when seasoned it "stays put." Mahogany is really a generic name, for it is the product of a number of trees, botanically quite distinct. The mahogany of commerce ranges all the way from the soft, plain "buy wood" of Honduras to the hard, beautiful San Domingo type which is now almost unattainable. The African varieties are also splendid cabinet woods, often with fine figure, but do not possess the lovely color of the West Indian varieties. It would be folly to say that there were not odd specimens of mahogany that would meet the gunmaker's requirements admirably, but this would only be the exception that would prove the rule that mahogany is not a suitable material for stocks.

Maple — Weight 38 pounds. United States and Canada. The best is always asked for and sometimes obtained. It is termed in specifications "hard, white, rock maple." A considerable quantity is found with a curly, twisted grain, and is known as "curly" or "bird's-eye maple." This variety is much in demand for veneers and decorative work. A particular variety of a wavy, curly grain without bird's-eye markings has also been called "papapses wood," and this is in demand for gun stocks at the present time. The early American rifle makers and gunsmiths used this wavy, curly grain on their best stocks from the flintlock to the percussion period. In those days maple seemed to be the wood mostly used even for the finest furniture. I have made up rifle stocks from this class of wood, but do not encourage a prospective customer to use it, as it is so much harder to work than the walnuts. I must admit tho that there seems to be something in our blood that makes us admire this wood, for when a rifle stock is made from a fine curly piece of maple, it stands out and apart from all other woods.

Myrtle, Queensland Honeysuckle, and African Stink-wood — Nearly all the wood imported into the United States and sold as myrtle is the Australian blackbean. This species of wood is very easy to work with edge tools, takes a beautiful polish, and checkers well. The grain runs very close and is of a fine texture. These woods have come nearer than all other tropical woods to the standard set by walnut. But for various different reasons they must stand aside and bow to his majesty, "Royal Walnut."

Osage Orange — Weight 48 pounds. North America. The wood is a bright shade of orange, deepening with exposure to air and light. It is rather lustrous and very pliable and elastic. The fruit is green, orange-shaped and large, with a very warty appearance, and late in the fall of the year the fruit still hangs to the tree. It would be well for one living in a district where these trees grow to cut and cure one, for it is useful in the construction of bows to take the place of yew; in fact, it is known as *bois d'arc* (bow wood). It is also for ramrods for muzzle-loading rifles.

Oak — Weight 52 pounds. United States. This grand timber has great qualities, but none of them such as would recommend it for gun work. Of all the oaks, the wood of the live or evergreen oak of the Southern States doubtless lends itself best to gun work, as it is very tough and closer grained than the deciduous varieties. Oak, however, is a wood for large surfaces, and "big" uses. It is not, in nature's scheme, a wood for little things, but it is chief of our native woods that might, in a pinch, be used as gun stocks. None, however, are in all ways as good, and few in any way as good, as walnut.

Fig. 53
Savage caliber 25-3000 bolt action rifle, restocked with bird's-eye maple

Paduka — Weight 53 to 59 pounds. Burma. This wood is the product of the true forest paduka tree. The wood varies in color from a bright yellowish red to a dark brick-red and is sometimes

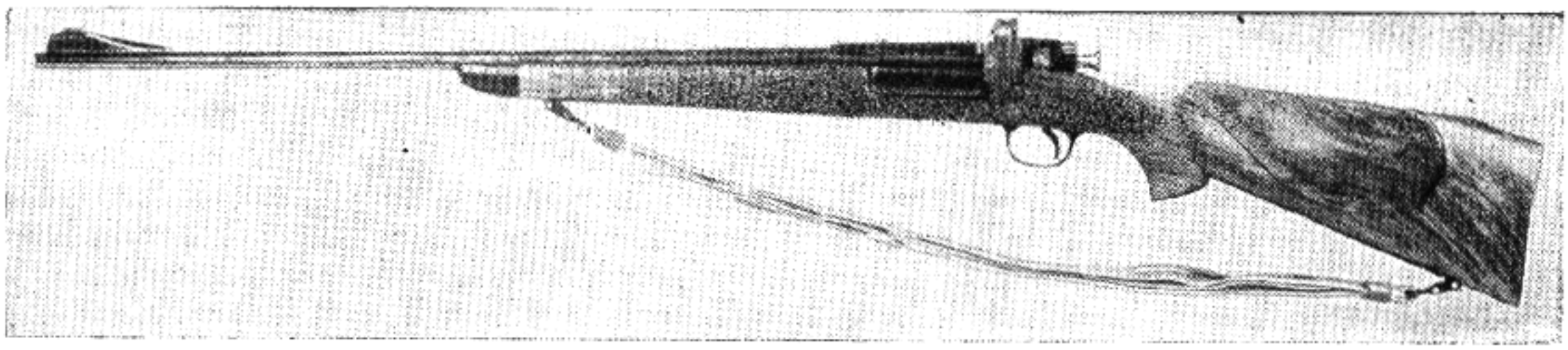

Fig. 54
Restocked Krag rifle. Model 1898 Springfield. Beautiful stock of richly figured Circassian walnut. Note perfect structure of grain in the wood

streaked with brown. For any one who likes red, this class of wood has the proper shade with dark streaks.

Persimmon Wood — Weight 49 pounds. North America. This is the ebony of America. Persimmon wood is the most suitable for shuttles, because it wears smooth, is hard, strong, tough, and of the proper weight. Sometimes the amateur gunsmith is a golf enthusiast, and it is a hard matter to find a better wood than this for golf-club heads. Very rarely a few pieces are found that have a handsome marking of light yellow, brown, and almost black streaks. The nearest resemblance to this can be found in a selection of highly striped ebony or coromandel wood.

Plum — Weight 54 pounds. Europe. There are many wild species of plum, but all are more or less similar. It is a very handsome wood and is not valued as highly as its undoubted qualities deserve. It is a reddish brown with darker and lighter streaks of the same color and is occasionally varied by some yellow. No tree of this nature should ever be wasted or burned, even in America, as it frequently can be used by the gunsmith for some decorative work on gun cabinets and to carry out other ideas which come along from time to time.

Rosewood — Weight 53 to 65 pounds. India. It is generally known as East India rosewood or as Malabar or Bombay rosewood. It is also occasionally termed Bombay blackwood. The color is variable, ranging from light red to a deep rich purple, and streaked with every shade from golden yellow to almost black. The chief use for this wood is for furniture, as it takes an exceedingly fine polish. It is so heavy that it is seldom used solid in any but small articles, and is known to us chiefly in veneers. It is very hard to work, is brittle, and far too heavy for gun stocking.

Satinee — Weight 54 pounds. French Guiana. This valuable highly decorative wood reminds one of curly maple, except that it is of greater beauty. The color is a light red which bleaches a little and assumes a very bright luster or sheen, especially when treated with a thin transparent polish. There is always a slightly marked, narrow shade of roe caused by the contrary soft and hard grain. With this figure in the wood, beautiful stocks can be made up—stocks to delight the person who has a liking for fancy maple.

Walnut, European — Weight 40 to 48 pounds. N. W. Himalayas, 41 pounds; Sikkim, 33 pounds. Great Britain, France, Italy, Turkey, Caucasia. India, China.

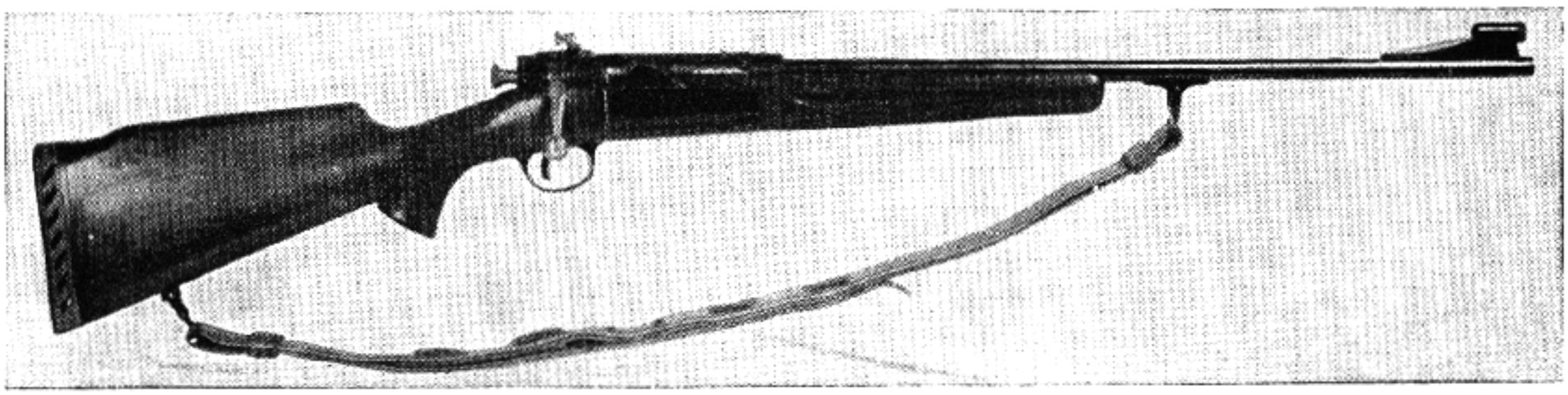

Fig. 55
Model 1898 Springfield remodeled. Wood, very plain piece of American walnut

In color this varies from light grayish-brown to dark brown. It is often traversed by black and golden or golden-red streaks and stripes, or is beautifully mottled and shows a wavy, roe grain.

Walnut requires some time to season, and shrinks considerably during the process; yet when subsequently exposed to drying or moistening influences it stands up excellently, and it is exceedingly difficult, if not impossible, to find another wood possessing this attribute to the same degree. For this reason it is the best wood known for shotgun and rifle stocks. After the stocks have been cut out and shaped, the wood retains its form and shape exactly, so that the rifle barrel and receiver or the shotgun locks will drop into their position and rest without bending the locks or throwing the barrel out of line. No variation in climate affects this.

The combination of characteristics which confer on walnut its reputation of being far the best wood for gun stocks may be summarized as follows:

1. Relative strength, toughness, and elasticity, which provide the power of resisting shock.

2. Appropriate weight, which gives proper balance.

3. Relative freedom of the seasoned polished wood from any shrinkage, swelling, or splitting when exposed to wetness, dampness or heat.

4. Uniform texture and appropriate hardness, so that the wood is readily cut into delicate shapes, yet yielding a smooth surface which is easily plugged by polish.

5. Hardness necessary to prevent the wood from being dented.

6. Lack of brittleness or tendency to split, which decreases the danger of fragments of wood being knocked off.

African Walnut—Weight 30 pounds. West coast of Africa. The woods which are obtained from Benin and Lagose show a large portion strongly marked with stripes or roe, which, tho sometimes straight, is more often broken up into irregular growths showing black lines which curve and twist into fantastic shapes. These forms are what is termed "blister" or "snail" figure. Other unusual markings also occur. The color is somewhat similar to that of French walnut, but it nearly always has a golden tinge. By careful selection, a yellowish brown or golden tint can be obtained which is quite unique. When this wood is carefully selected it makes a very fine rifle or shotgun stock, rather light in weight.

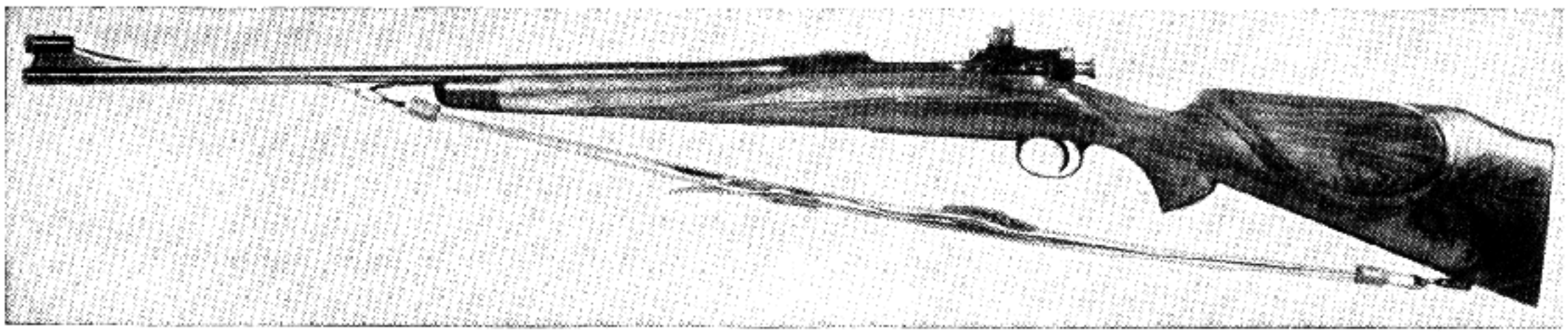

Fig. 56
Model 1903 Springfield rifle remodeled into sporting type. Stock of French walnut, not of the finest figure, yet not lacking in character

Black Walnut—Weight 37 pounds. North America. This wood is so familiar in this country that a detailed description would almost appear superfluous. The color, which is of a more uniform tint than the European wood, is a rich purplish brown. The beauty of the color is apt to deteriorate under the unfortunate and ill-advised use of shellac or French polish as employed by some of the arms companies; altho admirable for some woods, this is quite out of place with black walnut. A limited quantity of burrs or "burl" is still obtainable at extraordinarily high prices. During the European war, black walnut, besides being largely used for rifle stocks, was employed to a great extent for propeller blades for aircraft. The demand was so great that supplies rapidly diminished.

The black walnut that comes from Texas, California, and other States that have a hot dry climate, is the best. The black walnut that comes from Ohio, Pennsylvania, New York, Iowa, and other States where freezing weather occurs, is a very dark, porous wood. When working such wood you will notice in the sunlight a fine crystal effect. The walnut that is grown in the warmer climate and does not freeze has the finest grain, is much harder, and of a lighter figure, providing it is grown on the high ground away from water where the soil is more or less rocky. Consider the stocks on the Springfield service rifles; this class of wood is called the "Mississippi river bottom walnut"; it is porous, a quality due to the low swampy ground and a quick growth. This is a very familiar tree

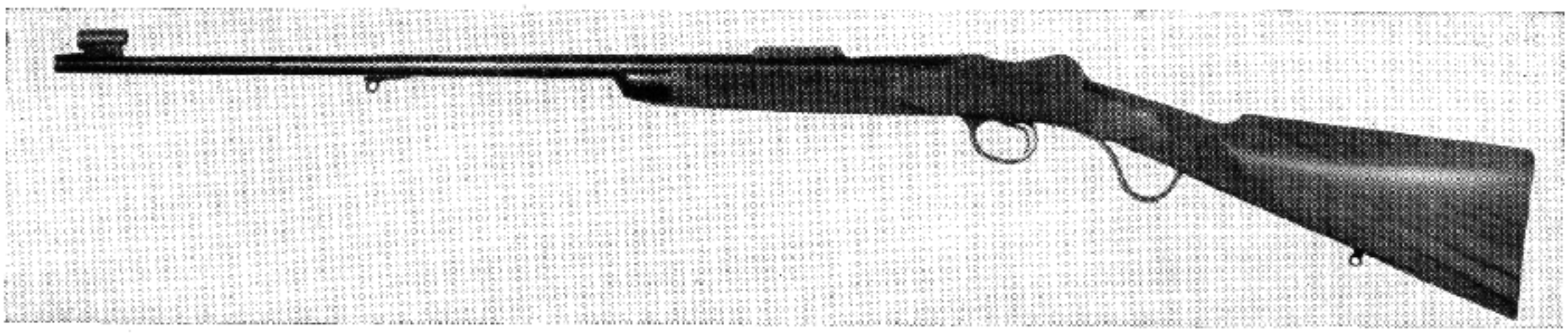

Fig. 57
Caliber .22 made on a Martini action. Turkish walnut. This wood is very dense, hard, and straight-grained

in the rich lands of the Mississippi basin; but because of the locality in which it is grown, the wood has a figure that is not the best for gun stocks in which you would take great pride. From the standpoint of beauty there is not a walnut that can compare with the foreign woods. True, some American or black walnut has a wonderful figure, but still you do not find the rich color that you do in the Circassian, French, English, or Italian walnuts. These are more expensive, but are well worth the difference because of the dense grain and strength of the wood. Whenever one wishes the best, he seeks the best, regardless of where it comes from or what the price. Black walnut is all right in its place as a beautiful piece of wood when given the special finishes supplied by all the gun manufacturers, but if you try to secure a fine oil finish, it becomes very dark and loses the effect it had before the oil was applied.

Circassian Walnut—In England the Italian walnut has always held the reputation of being the finest in quality, color, and figure; nevertheless, by far the largest part of the best wood in all respects is that coming from the Caucasus.

The walnut imported from Circassia has long been the best, and especially that Circassian which actually comes from the district of Poti. This supply of late years has been much reduced, and most of the so-called Circassian walnut has in reality been Georgian, Mingrelian, Imerethian, Gourian, and Abasian, all coming from districts much farther east and farther distant from the seacoast. The traders in wood in these countries have been generally very astute, and it has been exceedingly difficult, unless the trade has been carried on by Englishmen, to discover the real source of the supply; as a result, many disputes and difficulties have arisen. Every year the supply becomes scarcer, while the quality deteriorates so that the walnut of the better class will soon become unobtainable unless some new source of supply is found. This is the case with other valuable figured woods, as the greater part of the wood finds its way into furniture and similar work.

Without examination of a great many samples of each kind it is impossible to distinguish any structural features characteristic of the wood of different countries, for in the same country the wood varies considerably both in this respect and in weight. When you are working Circassian walnut you will find that you can detect it among other walnuts. Circassian walnut is one of the best woods for gun stocks, as it has that rich brown color with the dark lines well broken; and when you have a gun stock made from a piece that shows a coon-tail effect together with a mottled figure, you have one of the most beautiful stocks that can be secured. I use more of this class of wood than any other for gun stocks, because even in the lower grades the color is pleasing to the eye. Naturally, the British control the available supply of this wood for gun stocks, but you can secure from

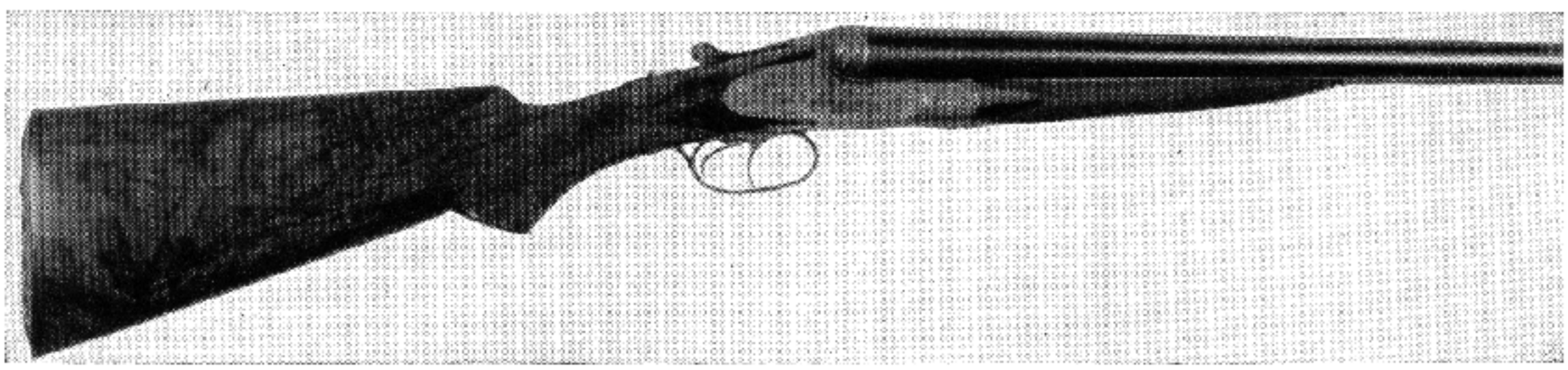

Fig. 58
Francotte 12-gauge double shotgun. Stock of beautiful Circassian walnut, colors ranging from reddish orange to black. Wavy character on both sides

England blanks of this wood at prices ranging from four to forty dollars, and as the British are most upright people to deal with, you can always expect to receive true value.

East Indian Walnut—Weight 47 to 60 pounds. India. It is a hard, dense, close-grained wood of a dark brown color, with black and gray streaks. It usually has a curly, wavy grain. Often it contains the characteristic figure of mahogany which is commonly known as roe and mottle, sometimes with a very pronounced and strongly marked fiddle mottle. The wood has a smooth yellow appearance. It has been used in this country for decorative work and furniture, especially by the Pullman Company in coaches, where it is known by the names of Koko and Laurel wood. It is not, however, suited to some of the purposes to which European and American walnut is put—for rifle stocks, for instance. It is too hard, brittle, and heavy.

English Walnut—A native of the temperate regions of the northern hemisphere. The nuts of the various species are well known. The wood varies considerably in quality, texture and color, according to the place and soil on which the tree grows. A much larger proportion than is usually recognized of finely figured, blood-colored British wood can be obtained. Its commercial culture in this country is practically confined to California, tho it is grown in widely scattered sections of the country. A hardy variety is grown in Oregon. The English walnut of Europe is of the same species and shipped under the trade name of English walnut. As this wood makes very fine gun stocks, it remains one of the most valuable of woods. Having in mind the world-wide demand and universal depletion of supplies, the planting of walnut trees should have an important place in any future scheme of reforestation. For those who live in a suitable climate with land available, what better plan could be carried out than to plant these trees along the line fences for future generations? It is far better than a trust fund for those who are to inherit such property.

French Walnut—This wood is for the most part light-colored and straight-grained. The relatively small amount of finely figured French wood available is practically all absorbed by Paris and Marseilles for veneers. Recently a great amount of decorative architectural work has been executed in plain French walnut. The quiet gray color and straight grain produce a dignified and restrained artistic effect and particularly suit the modern style of cabinet work. You can always tell the French walnut that comes from the southern part of France, as this part of the country produces the finest, and when it is possible to get a blank from this source of supply you must pay a high price for it.

Italian Walnut—While this is most generally named in architectural and other specifications, it is actually very rarely obtained. Formerly it included a large proportion of dark-grained figured wood, but of late years supplies of all kinds have been greatly reduced and the quality in all respects has very much deteriorated. What little Italian walnut is available is of poor quality; it is much better to use the best of Circassian walnut for the finest gun stocks.

Spanish Walnut—A regular but not a large quantity of wood has been imported from Spain. The general quality and conditions are the same as the French, from which it is difficult to distinguish, except that on the whole the shipments have consisted of sizes more irregular in width and length and contained more faults with a much larger percentage of sap-wood.

Turkish Walnut—This most nearly resembles the French walnut, but includes a greater proportion of figured wood. The last shipment coming into this country which I examined was a poor grade, and when a well figured stock was found

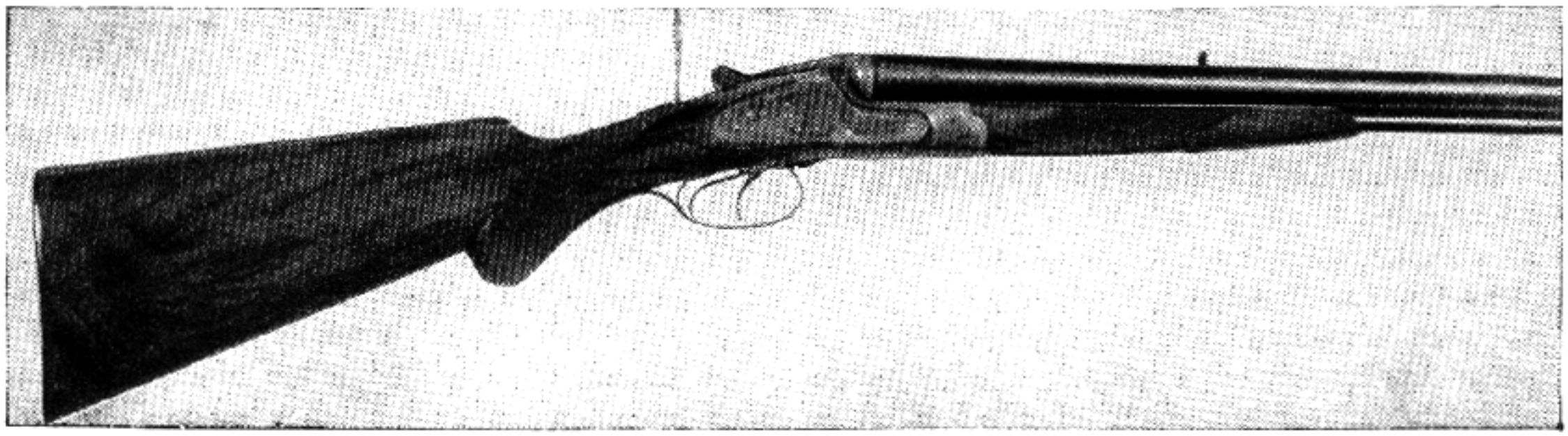

Fig. 59
A Charles Daley three-barreled gun. Stock of plain figured French walnut

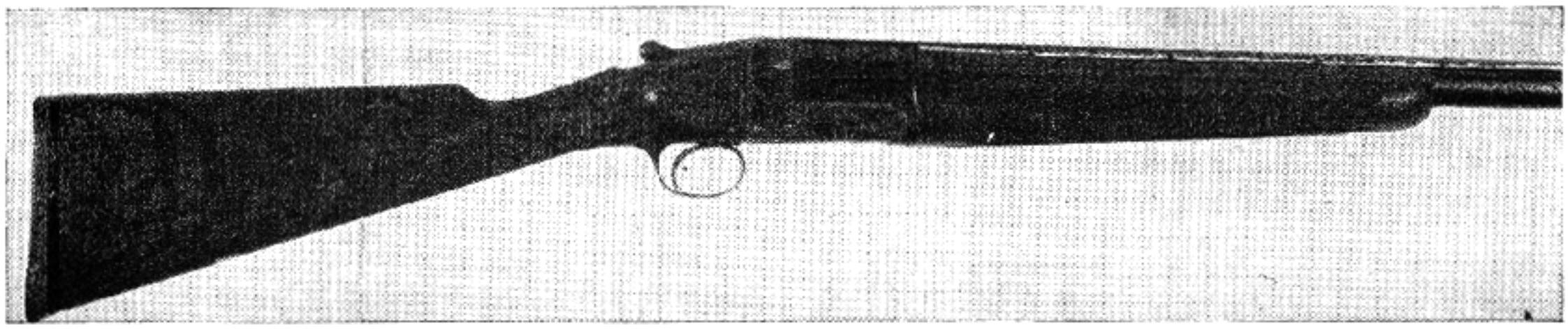

Fig. 60
Joseph Lang 12-gauge trap gun restocked with fine Italian walnut. Character of wood presents wavy appearance in certain lights

there was always a very definite defect somewhere.

Yew, British — Weight 48 to 50 pounds. Europe.

The color is a pale red somewhat like cherrywood or pencil cedar. It has a beautiful, smooth, lustrous grain. It is sometimes beautifully figured and occasionally has a burr growth. The product will compare favorably with Amboyan, and has often been mistaken for it. The strength and elasticity of yew wood has been known for centuries particularly on account of its use for bows, and of course a number of amateurs who work on guns also make their own bows, so with this wood in mind you have the best, providing you can secure the fine strong grain. As yew wood ages it becomes as hard as steel and has a dark beautiful color.

You may not only secure the well seasoned wood in blanks, but you may also wish to secure the wood in the log as well and season it yourself. So it is well to have a clear idea as to the meaning of the term "seasoned," as particularly applied on one hand to a piece of wood, small in thickness, and on the other hand to a log or beam. The small piece when seasoned is more or less dry from the outside to the core, whereas the wood of the "seasoned" log is by no means necessarily so. This latter fact is rendered comprehensible by a consideration of the sequence of events during the seasoning of a log. While the log has been exposed to sufficiently dry air, it loses water by the evaporation which takes place over the whole surface, but most actively at the two ends. When the bark is left on the log, evaporation is excessively slow, save where there are cracks or at the ends. As the moisture is lost at the surface, the drying-up superficial wood receives water from the interior. But as time goes on, it receives less and less; the log then, when protected from outside moisture, assumes a condition in which it is relatively dry externally and relatively moist in the middle. This condition may endure for years, possibly for decades if the wood is dense. Thick walnut trunks when cut open after being stored indoors for years are often found to be thoroughly wet in the middle. Even if such logs are described as seasoned, their wood cannot be so described when the log is cut up. The resulting pieces, including the moist center wood, will shrink and are liable to split in the same manner as unseasoned pieces. Yet such "seasoned" logs are very different in properties from freshly felled specimens. This is clear when it is remembered that:

1. Deformation, warping, and cracking are in the beginning caused by premature rapid drying at the surface.

2. Dry wood is stronger than wet wood, and in mechanical structures the important matter is to have the external part strong.

3. Wood-destroying fungi, causing rot, gain entrance solely through moist wood.

4. It is possible that wood seasoned slowly is superior in mechanical properties to wood rapidly seasoned. It is also certainly less liable to split during seasoning.

Thus the seasoned blanks on all gun work, when obtained from the dealer as seasoned wood, should be placed in a warm, dry place and not used for a considerable length of time. You must understand that gun work as a hobby is not taken up merely for six months or a year, but is continued over a period of years. There is evidence that wood first partially seasoned in the bulk and then fully seasoned after being sawed is much inferior to that which is felled, brought straight to the saw-mill, sawed at once, then seasoned. It is far more economical to season blanks and small pieces in the latter manner. The time required to season walnut properly varies so greatly according to the different kinds and sizes and the position in which it is placed, that it is impossible, almost, to lay down any general rule. A very rough manner of reckoning has been generally accepted, which allows one year for each inch of thickness, but this is not reliable.

The question has often arisen, Which is better—natural or artificial seasoning? Artificial seasoning having now been presented, comparisons can

be made between it and ordinary air seasoning. The question must be considered both from a technical and a commercial point of view. It is in fact practically impossible either for the professor with his microscope or the practical timber man with his knife to tell the difference between naturally seasoned timber and properly artificially seasoned timber, if the surface is planed off. Naturally the chief technical advantage of artificial seasoning is that it is possible to obtain with considerable precision any degree of dryness which may be required for a particular purpose. For gun stocks we must have the walnut completely dry, so that there can be no possible chance of shrinkage. In the light of commercial interest there are arguments favorable and unfavorable to be adduced. The solution rests less in discussing this disputed question than in turning to consider which type of seasoned timber is of the greater value. It is well known among those who have carried out high-class work, that besides making every effort to keep a sufficient stock of thoroughly natural seasoned wood, one should always see that the wood undergoes a certain amount of artificial seasoning before use. Of course this question rarely affects the amateur who secures only a small amount of wood, but it is for the man who figures far ahead and has the proper place for the natural seasoning, such as an attic or a place where a fine circulation of air is possible. As supplies of different wood are added, they are to be labeled with the date so that a complete record can be kept.

When selecting blanks from high-grade pieces of wood in the log, it is far better to consult those who know the proper method to quarter-saw and board-saw the timber, for if you do not saw these for figure and strength, you will note that the quarter-sawed planks have the edge grain presented on the flat surface, while the others have the edge grain on the edge with the layer carried by the annual ring formation showing on the flat sides. Edge grain as presented in the quarter-sawed plank is stronger if the strain is brought to bear against the flat sides. Since the strain on a stock usually comes in the direction of the bend at the pistol grip, it is found that the board-sawed planks are better adapted to resist the strains at that point. But if one so wishes, quarter-sawed planks can be selected to obtain the finest results without any danger of breaking as explained. Walnuts have a great margin of strength, particularly when the stock pattern is correctly laid out on the wood with due consideration for the direction of the grain. You will find places where you can lay out your pattern to secure the curly twisted grain coming up to the grip and out from there, a straight grain going to the end of the forearm. Your choice may be the board-sawed to secure the opposite effect. With these facts in mind, selection is a matter of individual taste. Figure 61 shows patterns to be used when cutting blanks.

In cutting a blank from a plank, always make use of a templet. This you can cut from a piece of thin, soft wood. By using it you can prospect your plank in all directions and decide how best to cut your blanks. You will not only be able in this way to get straight grain in the "hand" of the stock and figure, where figure shows to the best advantage, but by reversing your pattern you will be able to see just where you can save lumber and get results. This is very much safer and easier than guesswork. A perfectly sound tight knot, if surrounded as it often is by fine markings, is not entirely objectionable in a stock, but you will see, of course, that it does not occur where strength is needed. Your templet will enable you to judge this perfectly.

Checkering and polishing are two operations which must always be in one's mind when one thinks of stock wood. Good sharp checkering is almost impossible in open-grained, soft wood, and when it comes to the modern and durable oil finish, you will find that the work of getting a surface and a polish is primarily in getting the right kind of wood. This last operation is far from being an inexpensive one, and the saving in labor easily pays for more costly but suitable wood. Incidentally, I might say that your checkering will be determined in some degree by the material you are working on. Don't attempt too fine a checker on open-grained wood: this applies to American walnut. A shallow checker with obtuse grooves will be easier and safer. Only in firm and dense woods will fine checkering be possible and suitable.

The virtue of planting trees has long been recognized, and is daily being stressed by organizations, societies, and various smaller circles. Forest preservation is taught directly or indirectly in every school, for timber is one of our greatest natural resources, and it is rapidly disappearing. If we turn back the hands of the clock, many of us will see ourselves as small children, listening to the story of a very wise man who planted a fig tree for his children and grandchildren. The man who owns land today—and it does not matter in what part of the country it is located—may wisely plan reforestation with black walnut or the hardy varieties of English walnut, for the supply of these, more than any other, is rapidly diminishing and the demand is ever increasing. The virtue of such men will always be recognized; they create a veritable trust fund for those they leave behind.

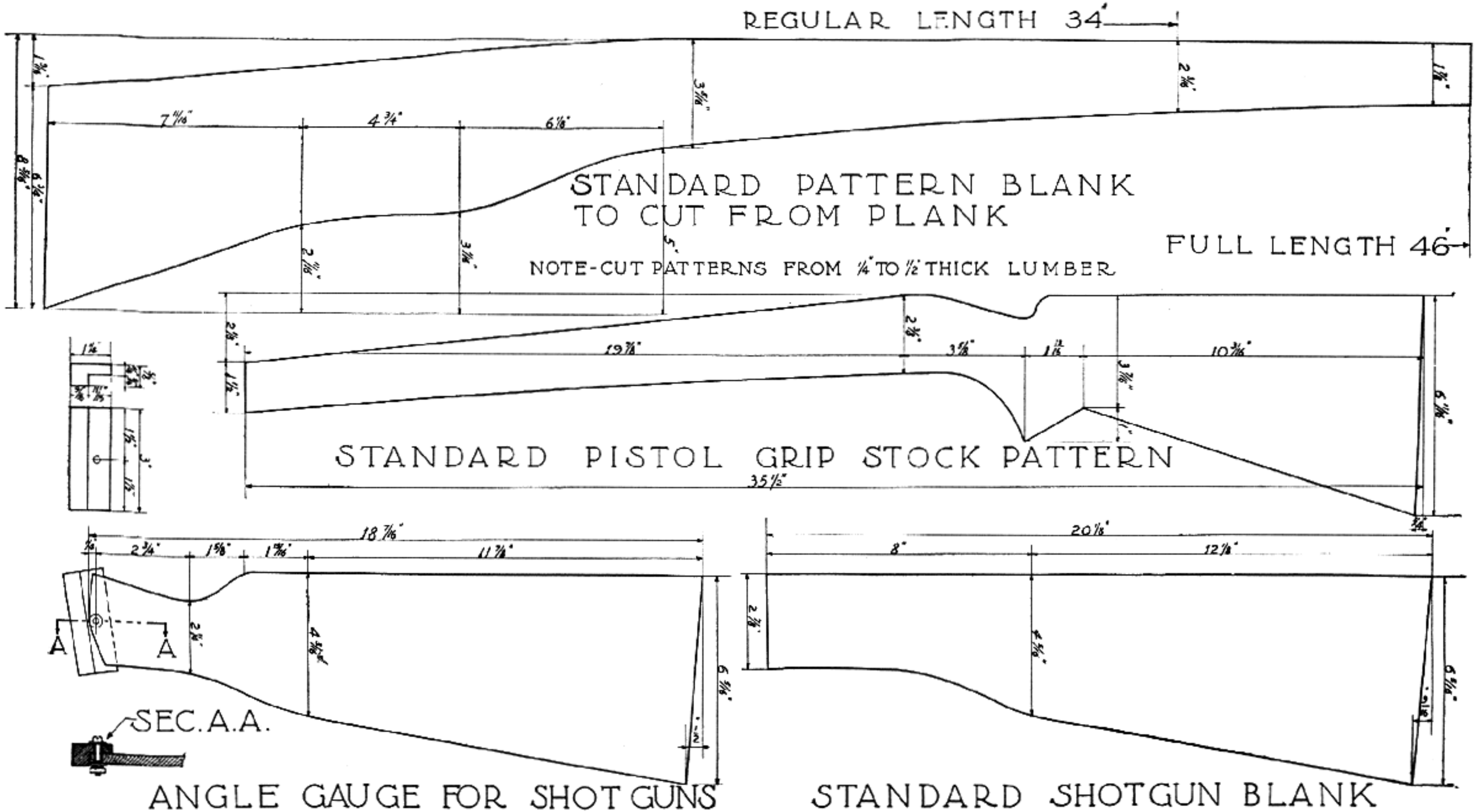

Fig. 61

Stock patterns, or templets, cut from one-fourth inch wood. Shotgun stock pattern gauge is required when laying out and cutting end to fit action

For those who wish to embellish a stock with inlays (it always seems to us a sacrilege when rich walnut is the foundation), some of the rare woods are suitable and decorative when used with ivory, ebony and ivory particularly being very effective when judiciously applied. I question, however, if ebony is as good as bakelite or buffalo horn when one wants black for any purpose.

Stock blanks run from about $3 for plain sound wood to almost any price one wants to pay. Really fine-figured, full-length rifle blanks of choice European walnut will run from $20 to $40 and are worth it. You must and will, however, "cut your garment according to your cloth."

In the Directory we give the names of reliable firms from which walnut can be obtained. Those firms we list we know from personal experience to be reliable. State your price limit and you will get the best which that limit will buy. In other native woods we can offer little help. Your local lumber yard and planing mill will have the information and perhaps the material you need.

CHAPTER VIII

Designing the Gun Stock

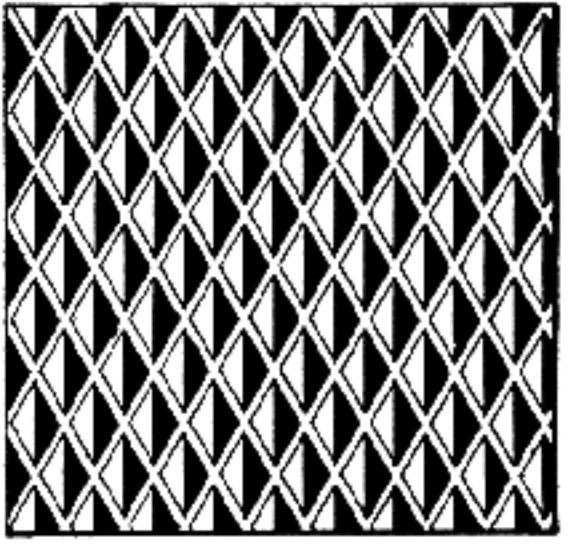

CHAPTER VIII

Designing the Gun Stock

IN CONSTRUCTING a gun stock, design is a very important point; the lines must be graceful curves, and conform to certain basic principles. When the stock possesses these qualifications it will give its maker that satisfying sense which we associate with a work of art. In an article, however, as highly developed as a gun, there is now not much room left for individual expression, particularly in design, for master minds during several centuries have gradually evolved outlines which have become established in our consciousness and set a standard of taste and utility. Only as to applied ornamentation is there really scope for new expression, and this necessarily is limited. We therefore cannot give the amateur better advice than to "hitch his wagon to a star," choosing for his star the work of a master gunsmith.

In reviewing the evolution of firearms and tracing this wonderfully interesting subject through the centuries, we find that the earliest shoulder gun was an unwieldy affair; it was really a small cannon lashed upon wooden scantlings. These forms can hardly be called hand guns because of the inability to use them except in conjunction with a forked support thrust into the ground to sustain their weight. With the progressive development of explosives, lighter barrels became possible, and by the time of the matchlock the stock or "stalk" had reached back to the shooter's shoulder. These, in the intervening centuries, approached gradually our understanding of accustomed lines, but were remarkable because of their excessive ornamentation rather than a worthy advance in design. The development of the stock, as we know it today, was very largely the work of that greatest of all gunmakers, Joseph Manton of London, who lived a century ago and brought the shoulder gun to such perfection that it could be used efficiently on moving game.

The problem of "fit" is of paramount importance, especially when we realize that most of the process of aiming must be done subconsciously. There are comparatively few shooters who appreciate this fact and are not under a continuous handicap in their effort for advancement. It is not difficult to determine the fit or misfit of a gun. Select some object, at a distance over which it is clearly discerned, preferably with a background that will bring it into bold relief. Stand in shooting position opposite this, visually determine its exact position, close your eyes, and bring the gun quickly and naturally to your shoulder, aiming blindly at the mark on which your eyes were fixed. Then open them and see where your gun points. Do it several times so as to avoid any unusual stance, and if your error is consistently repeated you will see exactly what is wrong. It may show that you are shooting high, which means too straight a stock or too high a comb; or it may show that you are shooting low, which means too much drop; or to the left or right, which signifies the need of "cast-off." Length and pitch of butt will also be apparent in the ease or difficulty with which the gun is alined. To determine actual measurements it is highly important to take into consideration the build and anatomy of the shooter. The tall, long-armed man will require a longer stock than one who is compactly built; and drop or bend will be similarly influenced.

In a shotgun, let it be remembered that when you see only the top of the action in aiming, you will be pointing too low, whereas, properly, the last few inches at the muzzle should be in line with your quarry. Determine well these two facts before deciding the correct drop of your stock.

There is a tendency, I am certain, in most shooters, toward a too liberal bend in the stock. Nothing is so conducive to an annoying recoil as too much drop. It should be understood that recoil operates in a direct line with the long axis of the bore, the gun meanwhile being converted into a lever with the weight at the shoulder and fulcrum at the point of drop. Trap shooters know this and are not slow in taking full advantage of it. The straightest possible stock consistent with a minimum in drop would suffice if game guns were used exclusively for bird shooting, but as ground and running game must be considered, we are driven to a compromise.

For deliberate shooting, such as at the trap or at stationary targets, a stock which is a mite too long is preferable, for it minimizes recoil and has a tendency to keep the gun well up; but in the marsh, when one is bundled up with heavy clothes,

a long stock would be a distinct disadvantage.

When I construct a new stock for a customer, I request him to go through the performance of aiming at an object in my presence in order to arrive at a definite conclusion as to his style and shortcomings. If he repeatedly places the butt too high I know forthwith that he needs a more generous drop, the amount of which may be exactly determined as the shaping progresses. As in the case of a suit of clothes, if the customer is available during the course of the work, there may be a greater number of fittings and a better chance of an ideal result.

Instinctive, correct aiming is what we are after. This saves time and speed in getting on your mark if it is in motion; it is of vital importance, since the vexatious problem of holding ahead, above, or below increases with distance.

The position of the head in relation to the right shoulder obviates largely shooting to the right, unless the left eye is the stronger or "master" eye. This is a more difficult error to rectify in stocking. It is true that cast-on, which is the swing of the butt to the left, is possible, but the distance between one's eyes is considerable, a feature which, when compensated for in the stock, distorts it and produces an unsightly result. I think the stock maker is well advised to encourage deliberate holding in this case. To learn shooting from the left shoulder may well be the better plan.

One point which is frequently overlooked in stock design is "pitch," or the angle of the butt to the gun. This is a very essential point, for altho one may have everything else in perfect balance, this simple fault may cause over- or undershooting. When a gun is made without pitch, it overshoots for some, and when it is made with too much pitch, it undershoots. Again we have to consider the type of build of the shooter. The man who is more or less thin-chested must have less pitch or none at all, whereas the erect person with a full cheek must have considerable pitch. I have found that a person with the latter build requires a pitch of between 3 and 5 inches in shooting a 28-inch barrel. In all cases, however, one must not forget the importance of a correct stance in the act of firing. Some stand in an awkward posture, and in such instances a correct stance must be acquired as a preliminary to correct gun fitting. The gun must not be expected do all the courting.

Strict attention should be paid to the proper balance or to the center of gravity of the arm when the stock is being constructed. The center of gravity must be determined by hefting and can only be checked by the feel. When a gun balances well the arm is far easier to handle and carry. If the stock is too light, by removing the buttplate, lead may be inserted to advantage in the butt at the toe.

Warning must be given the beginner that making a stock is not the simplest task in gunsmithing. The change between metal working and wood working is so great that you really have to be two mechanics in one. Yet it adds a very pleasant variety to your work when you have mastered the difficulties. Try not to let one branch suffer at the expense of the other.

If the stock is not fitted to the action perfectly, there results an opening between metal and wood which in every instance appears exaggerated. The fitting of the receiver, action, locks, guards, etc., must be done with care, precision, and perfect contact. All metal parts must be in close alinement with the wood, yet easy of removal or insertion.

The forearm or the left-hand grip of a stock on all standard shotguns has not been given much thought except in the case of trap guns. These have been improved by a flat, beaver-tail effect, which fits the palm of the hand and is rather pleasing in appearance.

In a double gun, owing to the width of the barrels, there is little room for improvement. For formal shooting, such as at the trap, an enlarged forearm can be advantageously constructed; for field work it is questionable if improvement is possible.

A study of the position of your hand in the act of holding will reveal a twisted effect which is very uncomfortable. Figure 62 shows a design of forearm to facilitate comfortable holding, as it re-

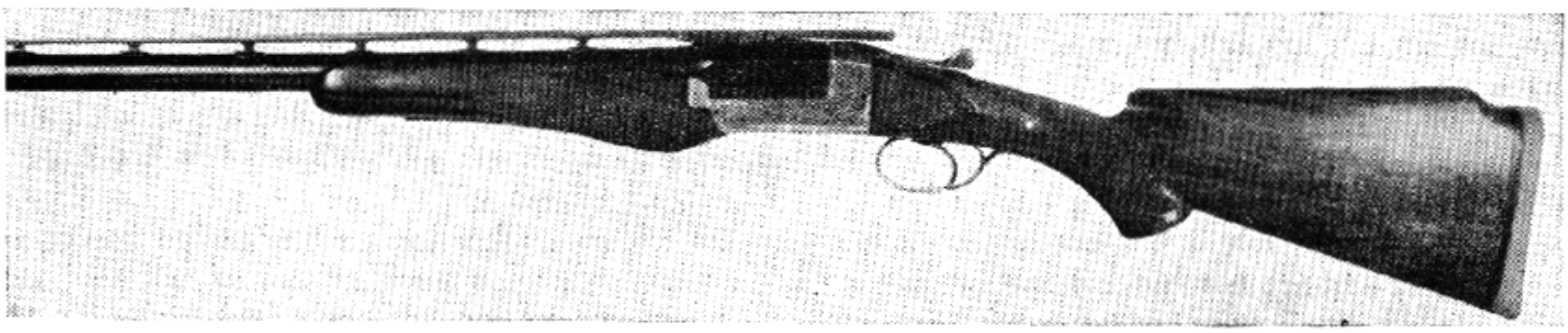

Fig. 62
Francotte 12-gauge trap gun stocked for the shooter's holding comfort. Note the unusual forearm and removal extension rib

Fig. 63
Restocked caliber 30-06 Newton rifle made with a close pistol grip and thumb rest back of the bolt handle. Designed for persons who have lost the use of certain fingers through accidents

lieves the muscle strain when the left arm is extended. True, when it comes to graceful outlines, it is rather out of balance, but it is practical and worth consideration.

When a pistol grip is added to a well formed stock it should blend perfectly into the lines of the design. Pleasing, graceful curves may be achieved here, and they can either help or detract to a degree that does or does not spell approval. A pistol grip on a rifle adds greatly to steady holding, providing, of course, that the grip is shaped to fit the hand and is properly placed.

Sometimes I think we are in danger of going a bit too far in what we call "close" grips. Our anxiety to get away from the useless pistol grips of yesterday has led us to another extreme. A grip too close and too pronounced certainly does not look well, and, in my opinion, restricts the free movement of the hand, especially in the operation of mounting the piece to the shoulder. Figure 63 shows a very close grip made for a man who had lost the use of three fingers and retained very little sensation in his index finger and thumb. Note the thumb-rest at the side. A stock design such as this is unusual, of course, and requires individual thought. There is no set rule to follow in the designing of a pistol grip, for hands are of different shapes and sizes. In the case of a shotgun stock the owner must be guided by personal requirements often known only to himself. When a person uses both rifle and shotgun, he may not want to be without a pistol grip on either, because he prefers that the "feel" be the same. When designing a full pistol grip on a shotgun, do not round the end of the grip as on some of the cheap European guns, but finish it in the same way that you would a rifle grip, except that you should carry the lines down much finer; it adds to beauty to have a cap of buffalo horn.

There are other faults aside from those just mentioned, and in your shooting education you will not discover them all at one time; hence you will find it necessary constantly to check and analyze the reasons why certain errors persist. The stock is not the whole gun. Rib, barrel, trigger-pull, sights, etc., must all be under observation for possible correction.

The correct method for estimating length of stock is first to place the latter in the hollow of the elbow, flexed to an angle of 90 degrees. If in this position you can reach the trigger comfortably with the index finger, between its end and the first joint, the stock will be about right in your case. For shotguns used at the traps, add from ¼ to ½ inch in length. For rifles, ¼ inch or less will be comfortable. This practise is by no means infallible, but it is a convenient procedure in determining the approximate length. Only actual trial will really settle the question.

I have merely mentioned the target shooter so far, or the designing of the proper stock for his style of holding. This subject is a never-ending one, for of all the stocks I have made and built for this class of shooter there have never been two alike, and their requirements vary to the same degree—they are in a class by themselves, and with the trap shooters comprise the genuine gun cranks. One day I extend the stock, the next day add a cheek piece, and on another day remove the extension and bring the stock back to the original length. The following week the cheek piece is removed, and another extension glued to the butt stock; and the

following month a new stock is made, only to be butchered up again. Under no consideration would I permit myself to express unbending individual views on the proper designs for a stock which will suit the target or trap shooter; there is no such thing, except as suggested in Figures 64 and 65. The enthusiast has to analyze his own requirements, and build airy dreams which never quite materialize, but give him endless pleasure. Bless his heart, he is the fellow that keeps us gunsmiths from the poorhouse and up on our toes.

Having discussed the outstanding points, it is now in order to touch upon measurements of parts which enter into the design of a stock, with final measurements on forming and shaping. The latter will be treated fully in another chapter.

Stock Nomenclature — Before going further into a consideration of the essentials of rifle-stock design, study Figure 66. If you are not already familiar with the nomenclature of a modern sporting stock, *A* is the fore-end or forearm. *FT* is the forearm tip. *G* is the hand grip, or upper part of grip. The British gun makers call it the "hand." *PG* is the lower extension of hand grip or pistol grip. *CO* is the comb. *C* is the cheek piece. *B* is the butt stock. *H* is the heel. *T* is the toe. Gun makers include both comb and heel when measurements are taken; this is necessary, for altho comb measurements are pretty consistent, there are variations. The line *S* represents the line of sights reaching from the front sight at muzzle, resting in the center of the rear sight and running to the extremity of the butt.

When taking the measurements of a shotgun, a straight-edge resting evenly upon the rib, and extending from butt to muzzle, provides the best medium. If a straight-edge is not available, the gun may be inverted, rib downward, on a table, and the measurements taken from below instead of above.

On a game rifle, the sights are usually set for 100 yards. Length measurements are made from center of the front trigger to center of the butt plate; *bc* measurements are taken to the outer surfaces. The measurements from trigger to heel or toe vary in different instances. Length of pistol grip is measured from center of the trigger to edge of the grip cap, *c*. Most important are the measurements given in Figure 67 in relation to the correct outlines for pistol grips, regardless of the length from the center of the trigger to the edge of the grip cap. These measurements have a great deal more to do with the feel and handling of the gun than the distance; such measurements will answer for both shotgun and rifle. When constructing a rifle stock refer to Figure 84.

The line *H-pi* is at right angles to the line of sight, and the distance *pi* to the toe *T* determines the "pitch" of the stock, if any. (Pitch means the distance of the front sight from the perpendicular when both heel and toe of butt plate are resting on a horizontal surface, i.e., the floor.)

When a stock has no pitch, it often causes the user of the gun to shoot high; this is because the toe gets a maximum amount of pressure under the shoulder when the gun is brought to the firing position.

In contradiction to a stock which has too much pitch, we have the opposite extreme, that which causes the gun to undershoot. The same rule applies to shotguns as well as rifles. Pitch has very little bearing on prone shooting, but it is well to have a butt plate with more convex surface when using a rifle in this position since it provides a rigid support that is lacking in a straight one.

It seems unreasonable to the average person that the fault of too much or too little drop causes so

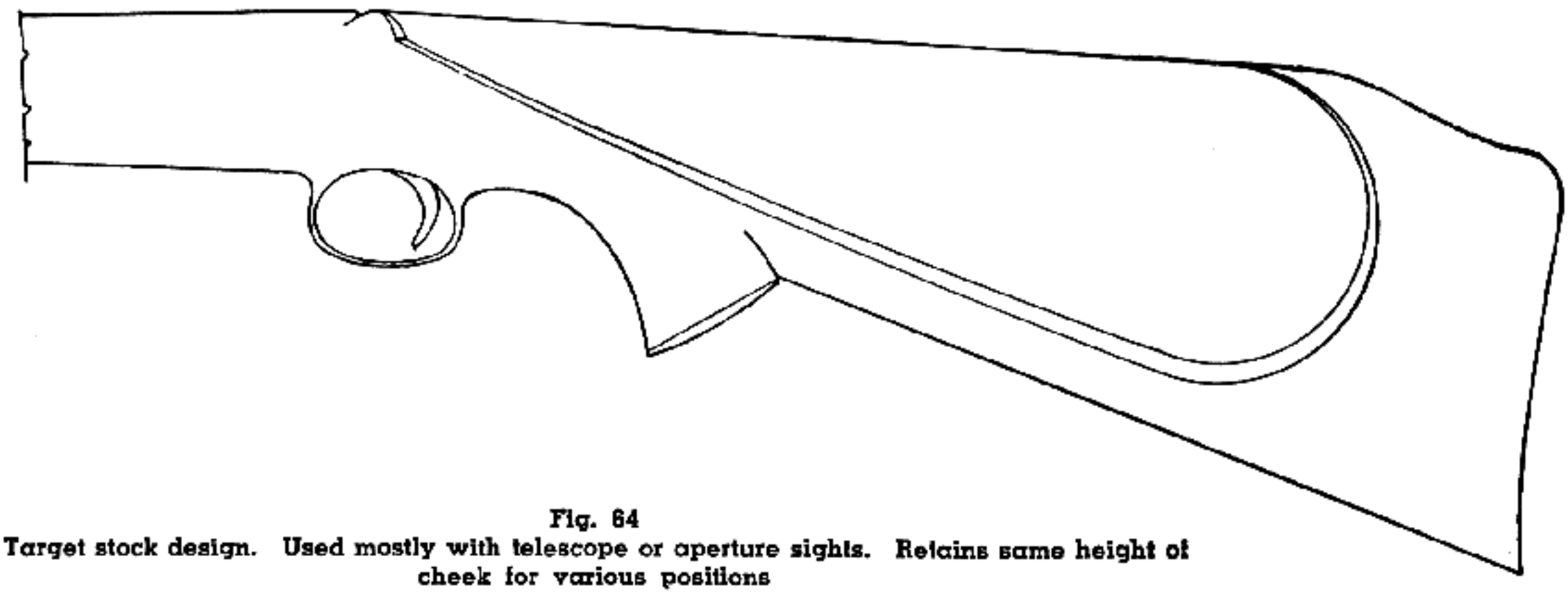

Fig. 64
Target stock design. Used mostly with telescope or aperture sights. Retains same height of cheek for various positions

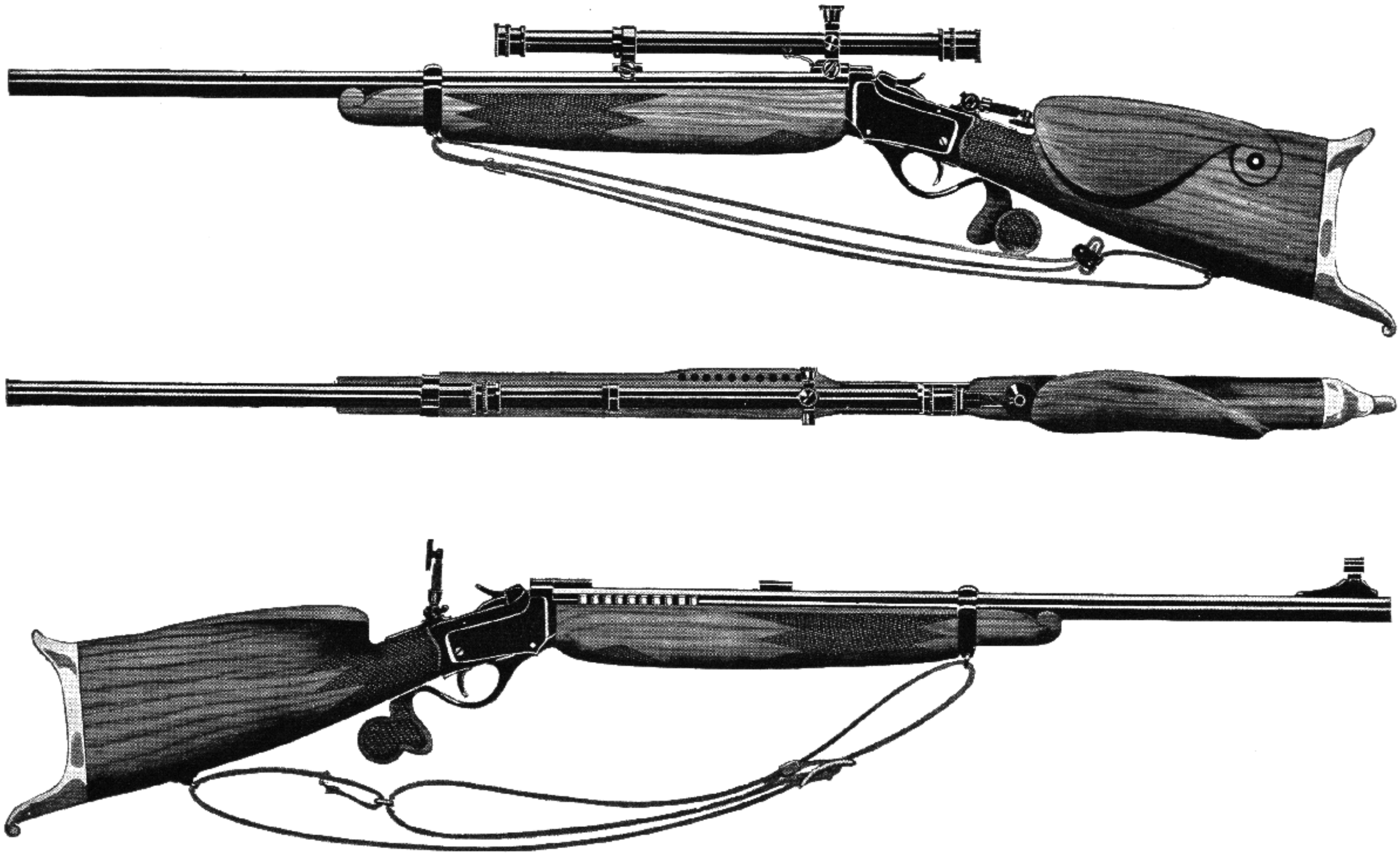

Fig. 65

Caliber .22 match rifle, single-shot Winchester action. Lyman 5-A telescope. Lyman iron sights. Carney target sling. An amateur's successful attempt to design a suitable stock for his own individual target shooting

vast a difference in shooting, and many novices fail to understand how the angle of departure of the bullet will be altered under these circumstances. With a stock made for a tall, long-armed person, the piece does not require any pitch. Let the short-necked, full-chested person shoot that gun and he will overshoot eight times out of ten, for the simple reason already mentioned—that there is too great a pressure at the toe. Vice versa, the tall, long-limbed person, using the short-necked and full-chested person's gun, will undershoot consistently.

When making a stock to fit a woman it is well to take into careful consideration the difference of physique in the sexes. Pitch and drop on account of perceptibility of recoil is here very important; also the position of the toe, which should be rounded and swung outward. The butt plate, in addition to the concavity from heel to toe, should be convex across its narrower direction; not as much for a shotgun as for a rifle, but enough to warrant a fit that conforms to outline of shoulder. We shall refer to this again.

The pitch of guns as usually encountered is between 3 and 4 inches, with as much as 7 and 10 inches for a heavy-chested person who stands very erect in the act of firing. This is presuming the barrel length is 24 inches.

The lighter the gun, the more recoil will be noticeable, but when a stock fits perfectly, the recoil will not seem so great, for you will feel it more when shooting a ten-pound gun with an ill-fitting stock than you will with a seven-pound gun with a perfect fit. For that reason I always recommend that the light rifle should have perfect balance and a well designed stock.

Cast-off — Looking at Figure 66, the small view of the butt end of the stock illustrates what is meant by "cast-off" in a stock. The line *g-g* is given by the vertical center line drawn between the front and rear sight to the exact center of the butt stock, and the cast-off is the amount *j-j* the stock is thrown off or out of line with the sights in a perpendicular direction. "Cast-off" always means that the central line of the stock is placed to the "right" of this lateral direction, when the gun is held in a normal shooting position. "Cast-on" means the distance the stock is thrown to the "left" of the perpendicular line. The man who shoots from the right shoulder requires "cast-off" and the person who shoots from his left shoulder requires "cast-on."

Cast-off or Cast-on — Drop at comb and heel, and length of stock, are naturally all dependent upon the build of a man and his physical deviations. This is a factor which the stock maker estimates by experience. Too much cast-off will cause a gun to shoot to the right. The usual amount of cast-off is ¼ inch at the heel, and is about the correct amount for the average person. Some stocks have more cast-off at the toe than at the heel. When a shooter involuntarily cants his gun to the left, I bring the toe to the center line, with the heel between ⅛-inch and ¼-inch cast-off. Remember when giving cast-off to a stock that the angle of the butt plate must conform to it so that seating against the shoulder will be correct. With a large cast-off, it is best to have a convex section in the butt plate. Figure 66 shows a stock blank laid out for a cast-off stock, *a-a-a* being the perpendicular center line, *b-b-b* the new line in a lateral direction.

Balance — The word does not do full justice to our understanding of the term. When a rifle comes up to the shoulder only with an effort, we say it balances badly, and as this is what we mean, let us continue to use the term until a better one is found. In designing a stock, the weight of the wood must not alone be taken into consideration, but the metal parts as well. In shotguns it is a very easy matter to secure balance, as you can either remove or add weight to the butt stock, and have the gun balance at a desirable point ahead of the trigger guard. In the case of rifles, with their comparatively heavy barrels, it is much more difficult, for we have many different types to consider. Some rifles balance naturally at the right point when remodeled, especially the Springfield, Mauser, Winchester, and Mannlicher, and it is fairly easy to secure the correct proportions of weight between barrel, action, and stock. On the other hand, our tubular magazine repeating rifles with full-length magazines can hardly ever be made to balance. That feature is very greatly aided and more easily obtained when a certain proportion of the total weight of the arm can be centered between the hands while holding. Extreme care must be exercised not to remove too much weight from the muzzle, for a muzzle-light rifle or gun loses the degree of stability which is essential in the act of shooting. The forward part of the barrel helps stabilize the piece while in position, but the exact proportion of weight that should carry to that of the whole gun must depend largely on the individual. Some men require distinctly more weight anterior to the support of the fore-end hand than do others. Again, some cannot use a short-barreled gun; others find such guns a great benefit, in that they provide added speed and proficiency in maintaining elevation, while many trap shooters still swear by barrels 32 and 34 inches long. We must confess that, to our mind, convention plays a great

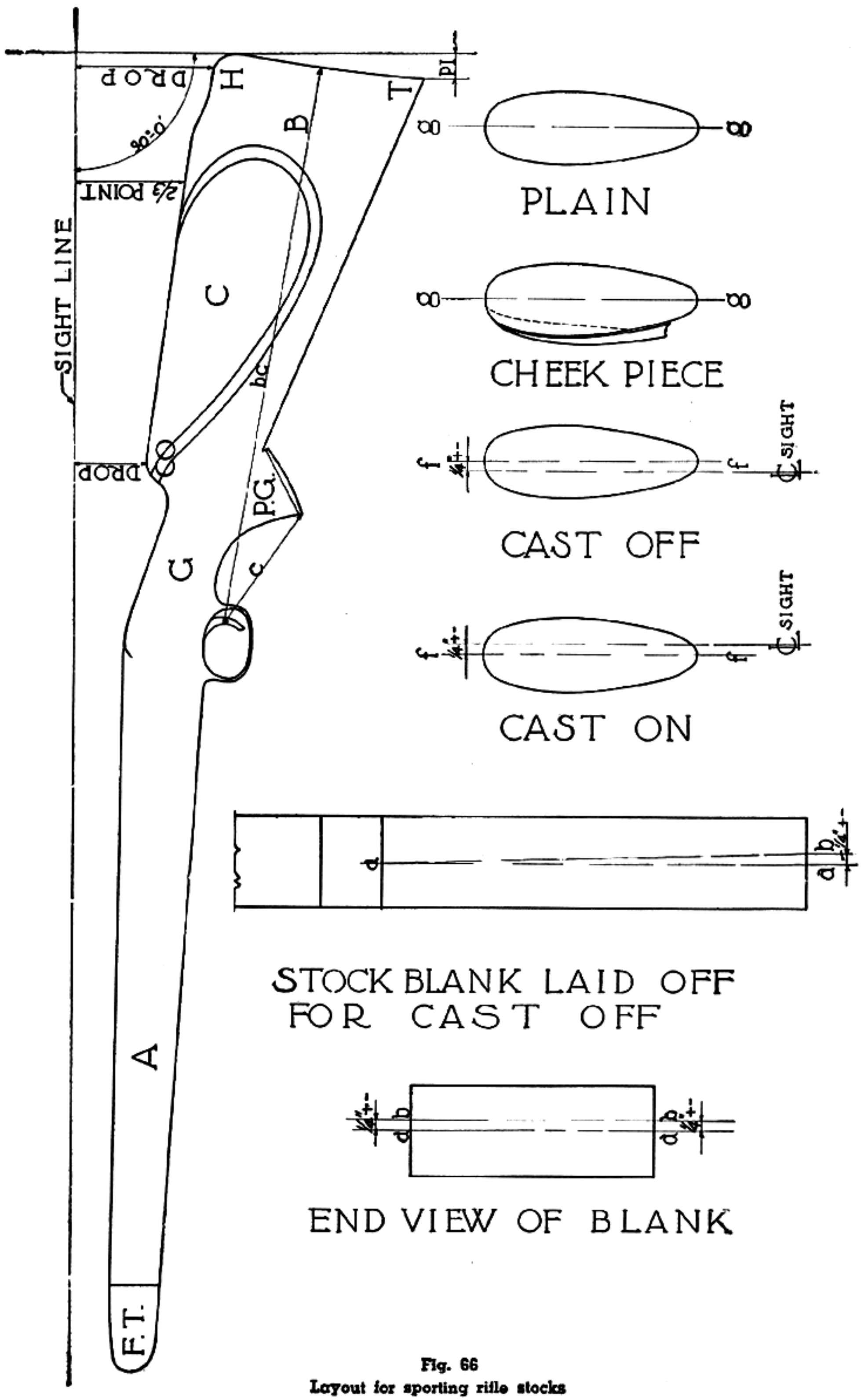

Fig. 66
Layout for sporting rifle stocks

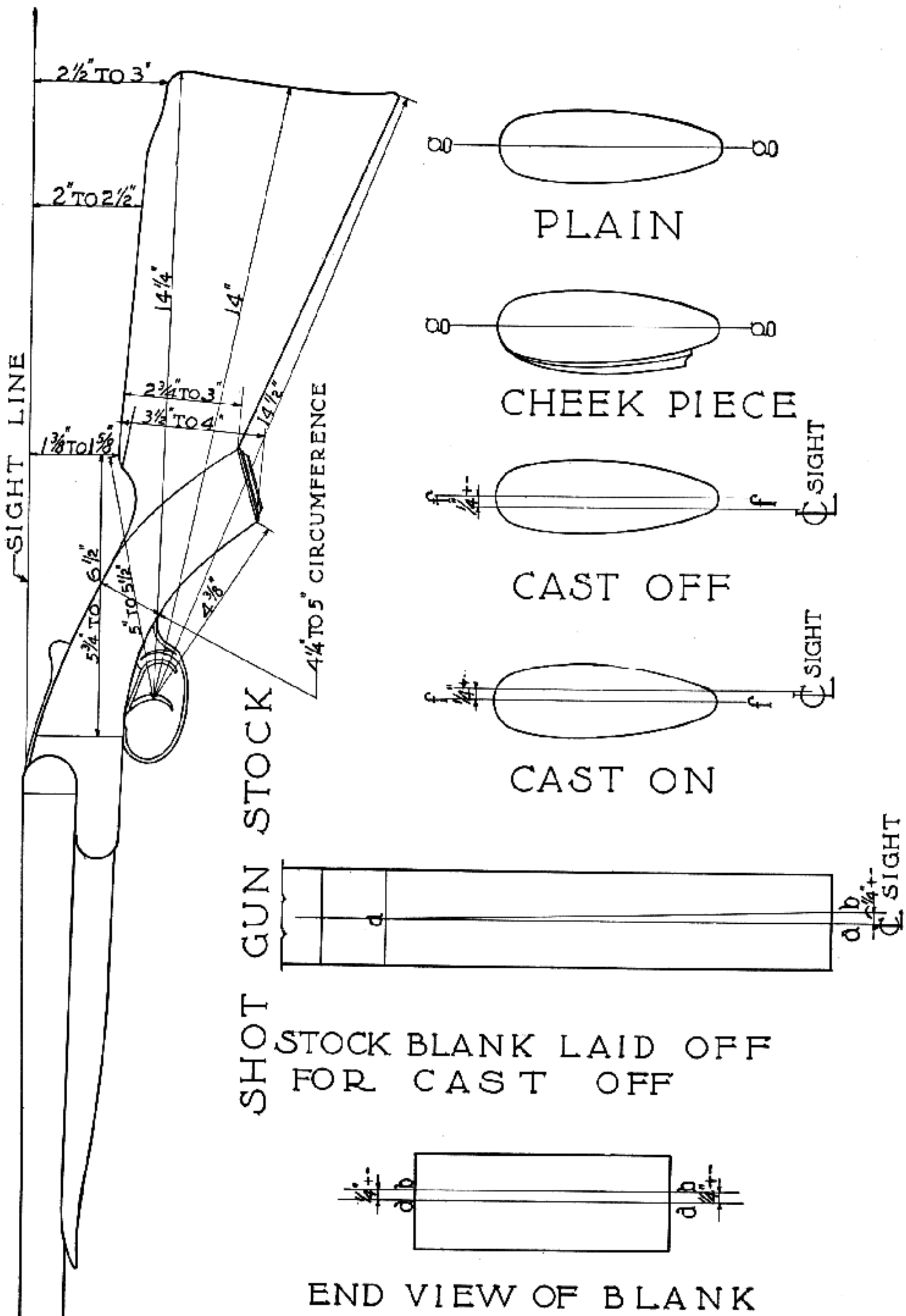

Fig. 67
Layout details for average shotgun stock measurements

part in this. A necessity of the black-powder days has persisted as a custom.

When it comes to balance, we have reached the point of perfection in our finest shotguns. For the better grades, the makers have studied this question from every angle, and whenever a person secures such a gun he may be sure of having it near to perfect balance. A like practise would improve universally the handling of many of our cheap guns. It is well known that many individual shooters and gun cranks require specially designed stocks; one for the prone position and another for the offhand position. This is, in a manner, justified, for a given rifle cannot excel in both cases. The rifle used in prone position does not demand balance, and muzzle weight is an advantage; but too much weight in this direction is disastrous in offhand work.

Butt Stock Design — All butts are fitted with butt or heel plates of different forms and materials; some are good and others unsatisfactory. The hard rubber plates furnished on standard arms are a poor makeshift and easily broken when subjected to hard usage. On the other hand, the steel curved plates of our commercial rifles are only a relic of our early American muzzle-loading rifles. Some prefer these plates because they do not slip so easily from the shoulder when one is working the lever or bolt in rapid fire, but their day is passing. The more modern steel butt plates which are made in Europe are by far the most practical, for they have the desired convex surface in the center and also the proper concavity from heel to toe together with the right length and width. Those made for the Mannlicher-Schœnauer rifle are particularly good. The correct measurement of a plate should be 1⅝ inches wide and 5⅛ to 5¼ inches long. The next choice of a heel plate is the compressed buffalo-horn plate made in England. The manufacturers soften the horn in some manner and then re-form it in moulds under hydraulic pressure. These plates are nicely designed in every detail so that they take up the effects of the recoil evenly. Third is the rubber recoil pad. This form of butt plate never adds beauty to a well-designed stock, but it is a boon to those who are sensitive to recoil, particularly in heavy double rifles when used in a hot climate, the shooter wearing possibly nothing more than a thin shirt. Recoil pads are a great aid on trap guns where many successive shots are fired. A pad on the well-designed stock of either a rifle or shotgun where the recoil is not very severe is not altogether desirable; it adds weight to the end of the stock, and tends to cling to one's clothes or stick at the wrong place on the shoulder. The friction can be overcome by cementing on a piece of leather which is glazed on the outer side. Trap plates must fit perfectly, and it is therefore well to surface the bottom edge of the plate so that it and the wood will adapt evenly. When these plates are given the final shape in the forming die, the outer edge of the metal assumes a slight angle, ostensibly to secure an outside fit, but this must be filed straight with the stock so the butt plate will have continuous contact with the wood. When fitting any form of butt plate, it should be done in the same manner.

Bringing forward weight to secure balance is done by boring out the stock under the butt plate; you may find it necessary to enlarge the opening until only a skeleton remains. When this process is attempted where no trap plate is used, the cavity formed in the butt is sealed by gluing in a plug of wood to match. This should not be less than one-half inch in thickness so that it will protect the inside of stock from moisture. When using a trap butt plate, holes may be bored to hold accessories, such as extra firing pins, cleaning rods, pull-through, or several reserve cartridges.

In the design of a butt stock, the top center line from comb to heel and the bottom center line from grip to toe, should be in the same vertical plane. This refers, of course, to the ordinary straight stock. When there is a pistol grip, the thickness is governed by appealing outlines and the shape of the hand, while the comb should be well proportioned with undercuts at the point. For about 1½ inch back, have the comb well rounded. By continuing the shape of the butt plate forward on a taper you will find it possible to carry out graceful lines, with the undercuts ending gently 1½ or 2 inches back of and interior to the tip of comb. A

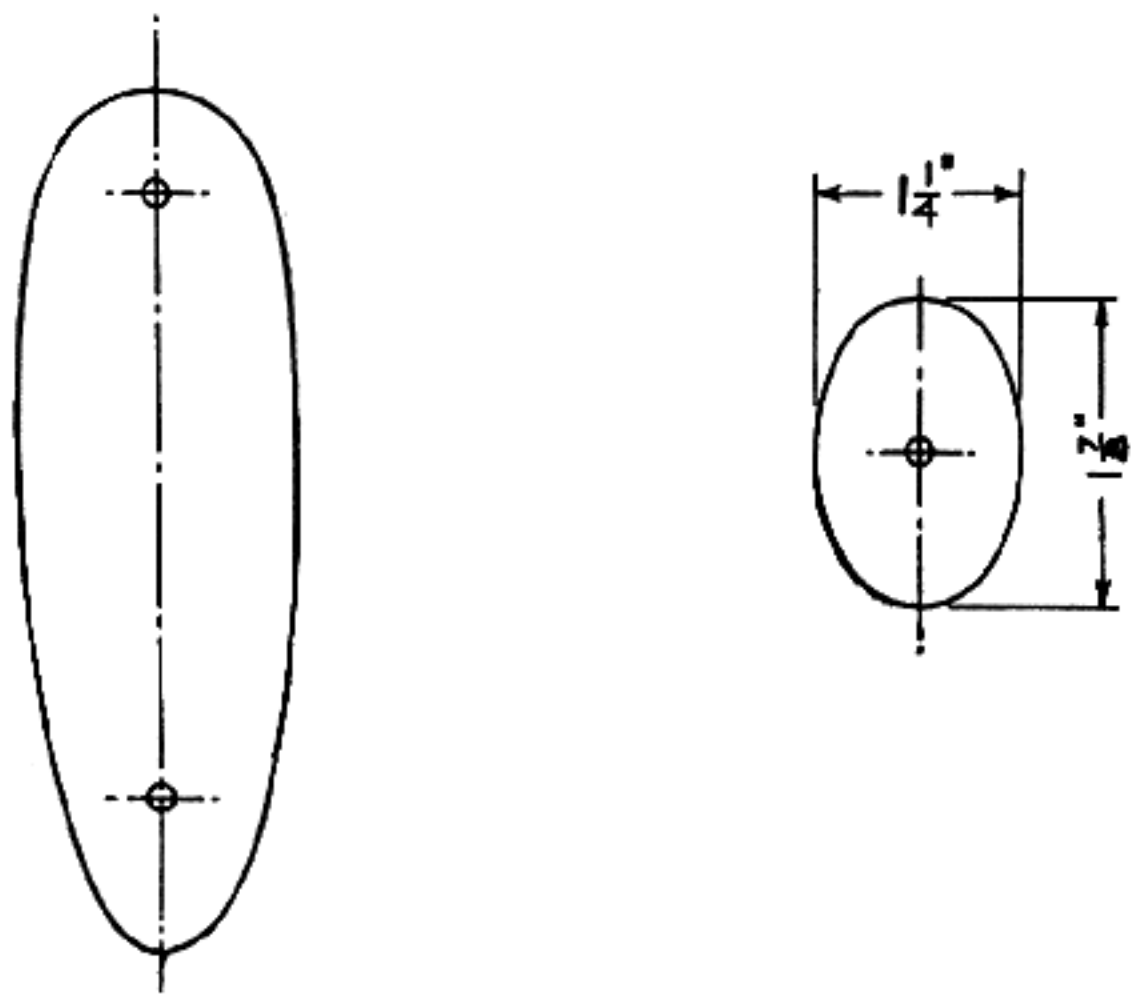

Fig. 68
Butt-plate and pistol-grip templets

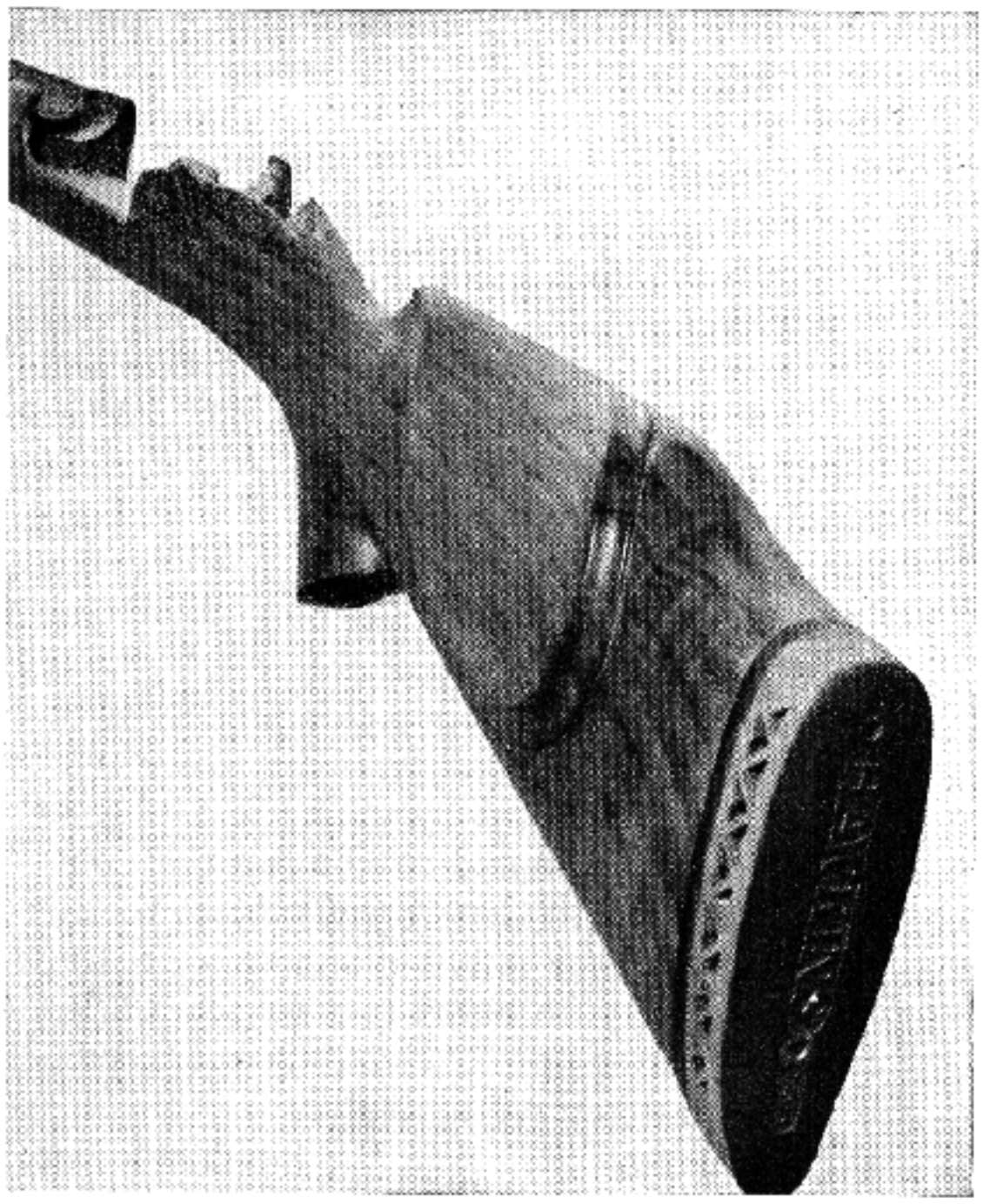

Fig. 69
End view of a Monte Carlo stock, and special cheek piece

neat plain comb, well rounded without undercuts, carried well in from the sides, is also attractive and practical. Figure 77 shows the correct method in which to form the undercuts on a comb. The low undercut from the comb to the hand grip is a great mistake, but one made by a number of beginners. Figure 68 shows a butt-plate templet—and also one for the pistol grip—which is about the ideal form for plate and lap. One-sixteenth inch added width may be allowed for a rather large full butt, but 1⅝ inch is wide enough when used in a new stock design.

Let me repeat, the line from grip to toe must be straight. A few years back, I had the habit of crowning this very slightly. The center was about ⅛ inch lower than the toe to the pistol grip. To-day this curve is deservedly out of place. A slight fulness is permissible on a target rifle or a single-shot stock, but on a well-made rifle or shotgun used for other purposes—never! A shield or crest plate, half-way between the grip and toe, with the owner's initials, looks well. On the best guns these are made of gold, but silver is just as pleasing and satisfactory. Initials, when placed on a gun in a monogram, add a distinctive note and are ornamental as well.

Cheek Pieces — A cheek piece adroitly added to a rifle stock may be beautiful, or if poorly shaped may be ugly; in the latter case it is a source of annoyance, and is as useful as a sore thumb. When designing cheek pieces try to express refinement in every curve, with each one blending gracefully into the other. At the same time, do not lose sight of the fact that such an addition is made for the purpose of acting as a rest for the cheek when aiming and holding. A cheek piece is really essential for a thin-faced person. When it is added for use of a full-faced individual, I deem it in most instances a personal preference and for appearance only.

After having made many different forms of cheek pieces I decided the correct form was the one illustrated in Figure 69. It should add distinction to the rifle and be a help and comfort to the user. Figure 70 illustrates such a cheek piece, giving both lateral and underneath views. The one showing the bead must be carried well out in specified proportions, beginning at the comb and ending at a given distance ahead of the butt plate. You will notice that the lines blend harmoniously and have their point of perspective at the top.

The curvature of the cheek rest should conform to the convexity of the cheek. The rearmost section is high, gradually sloping forward to the comb, so that when recoil takes place, the cheek is perfectly set and no discomfort is felt. The common ones are seen most frequently on cheap popular rifles, as they are easiest to construct.

The Whelen cheek piece was designed at a time

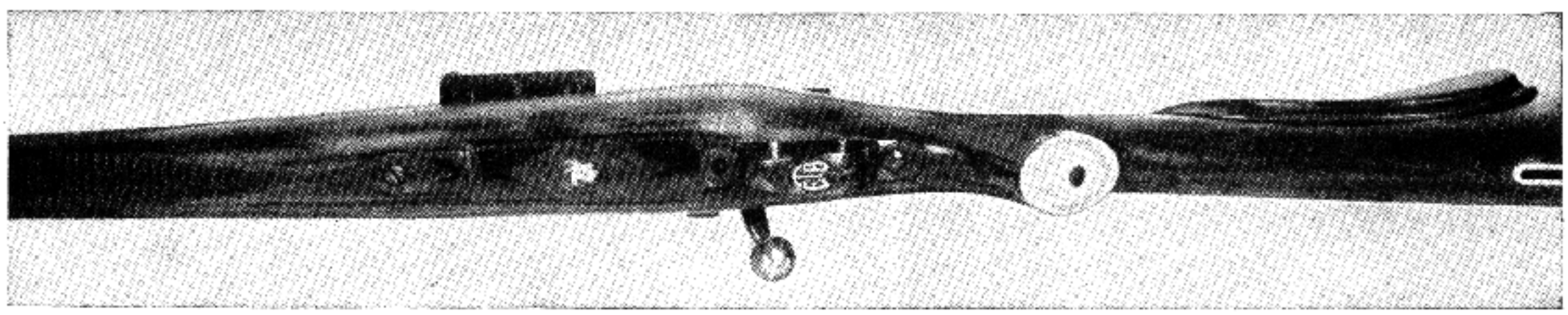

Fig. 70
Under side of a well-formed and graceful cheek piece. Ivory pistol-grip cap, ivory and buffalo-horn inlay near the toe

when the development of rifle stocks called for greater refinement, and the result was a beaded edge which eliminates the unsightly one found on low-priced stocks imported into this country. The Whelen cheek piece, as shown in Figure 84, when carried well to the top, is one of the best.

Figure 66 will give the student an idea of how to lay out a cheek piece. You will note in Figure 69 that the cheek piece does not vary in thickness to the comb or upon edge of stock, nor does it increase as it follows the line down, and it is only when it starts upward on the rear that it becomes full. The concave surface sloping forward permits the cheek to rest in such position as to allow the recoil to divert the pressure from the face. It is like a good saddle when a horse starts bucking, and makes the stock both safe and comfortable to shoot. A cheek piece constructed along these lines aids in the formation of an efficient and artistic comb.

This accessory is a great aid on target rifles, especially those of small bore; however, it should extend further forward to, or almost to, the action, so that it will be possible to assume the position best adapted for that form of holding. Conveniently, it should be high enough so that the sights will readily and without effort fall into perfect alinement. If you are a small-bore enthusiast it might be well to experiment upon a cheek piece of this construction. If you do not care to design at first a new stock with this feature added, insert a cheek piece by cutting into the stock in its central portion, approaching the action, and finally gluing it in place. Your creative ability will be answered by a result fitting your requirements. When you get an understanding of just what you want, it is time to build a stock, using for a model the one you inlayed. Figure 66 will give you an idea of how one of these should look when completed.

Comb Design — Upon the completion of the cheek piece, a comb is the next important feature to be considered. The reader might think this a simple matter of design, but he must take into account the vast number of double shotguns, rifles, and single-shot arms, together with the well-known standard factory output. Comb and stock formation are proceeded with together, beginning at the well-rounded tip of the former, with diverging lines extending backwards to the desired height and thickness of heel. Ideas in dimensions for toe, heel, and grip are as numerous as those of the men and women who have use for guns. I have found that for most requirements a measurement of 2¼ to 2½ inches from the end of the receiver to the comb is about the correct distance. On shotgun stocks, there is no fixed dimension, so we must place the comb tip in the position which adapts itself best to the position of hand and cheek bone, conforming meanwhile to the symmetry of the stock in general.

When designing a new stock for a shotgun, take the measurements from the front trigger. If the model is of the single-trigger variety with trigger in the rear position, deduct about ½ inch to the point of comb. On the Springfield, Krag, and Mauser rifles with single trigger, a measurement of 3¾ inches will be about right for the average person. Whenever possible, grip and comb should be fitted to the shooter's hand, keeping in mind the bolt which on its under surface must just clear the comb, and no more. This will give a drop, there, of about 1⅞ inches.

Most beginners have a poor conception of the proper design of a comb, and this reflects on their ability to make a perfectly designed stock. By carefully studying the figures of combs throughout the book and on stocks that appeal to you, the desired pattern may be found; I know of no better way or more direct line to a satisfactory result. For trial, take any piece of wood and form up a comb as you think it should be. Compare it with the photographs of different arms, remembering to make the undercuts in position. To get it exactly right, you will find, is rather a difficult feat. A comb is a tricky thing to shape, for with this, as well as a cheek piece, the greatest pains must be taken to bring forth the ideal that is admired subjectively and that answers all requirements objectively.

Forearms — The question of forearms and forends is wholly a matter of choice. On double shotguns they should be kept more or less to the well-known standard, except in the beaver-tail model, which is seen exclusively on trap guns. For a shotgun, select a sound strong piece of French, Italian, or Circassian walnut. These woods are tough, hard, and not liable to split. The beauty of the wood is covered often by the checkering and metal parts, and it is therefore necessary to have a wood well marked, if the figure is to stand out over these encroachments. Naturally one can use any strong wood given in the list of woods, but it is necessary to match the wood used in a forearm with that in the butt stock. I have always admired the forearms on the Winchester arms because of their shape, length, and general outline. They look well, feel well, and are to me altogether satisfactory, so I may be forgiven when I think they excel all other commercial arms. The beginner will be wise to use one of these for a guide as to size, length, and form.

Study Figure 71, then measure your hand and

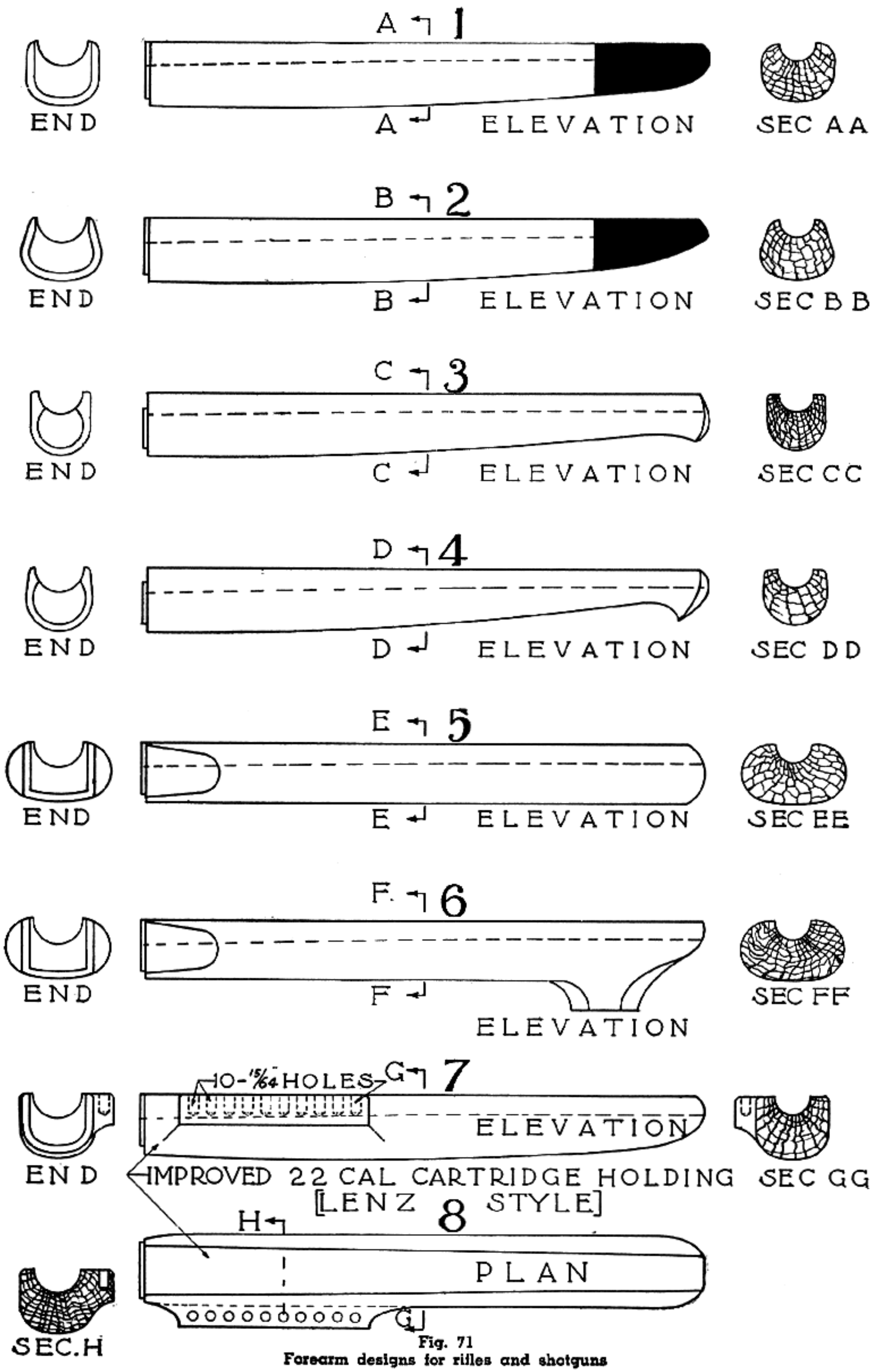

Fig. 71
Forearm designs for rifles and shotguns

study its shape. Decide which type will fit best, "1," "2," "3," or "4." The one designated "2" is universally used on best-made rifles. "1" is a modified pear-shaped forearm, but is really a matter of choice, and is an assistance when one has a tendency toward rocking or canting his rifle. It is not always an easy task to make the lines of this form blend well with the remainder of the wood work, whereas in "2" the lines blend naturally from the sides to the end of the tip. "4" assumes a true cylindrical shape which has its admirers. "5" is the full beaver-tail forearm used so much on trap guns, and lately on target rifles as well.

The general rule to follow—which also helps to bring a rifle into good balance—is to make the forearm on a rifle of a length just about half the distance from the receiver to the end of the barrel, providing the barrel is not more than 26 inches long. Above that length, I practically always use between 10 and 11 inches as a standard length. When placing a swivel base on the barrel ahead of the forearm it should be about 2 inches ahead of the forearm tip, which avoids a cramped or crowded appearance. Attached to the forearm, a distance of 8 or 9 inches from the end of receiver is about right. On a very short barrel with proportionate forearm, it is wisest to place the swivel on the barrel.

The peak of the forearm tip is finished in a number of ways, varying with ideas, likes, and dislikes. Figure 71 illustrates different forms of tips used. A very common method is to shape a "schnabel," so called from the German word for a bird's beak. "3" which pictures a plain, tapered, efficient forearm, adds a mark of distinction to any well-designed stock when formed gracefully. An improperly designed schnabel is always an eyesore, and so unattractive that it never fails to bring forth derogatory remarks. This, like the comb, reflects your taste and calls for practise with an easily-worked block of wood in order to secure the sought-after form and graceful lines. Make up a number of sample pieces so that you may express your ideas and compare them. Simultaneously, study those on factory arms, which, because they have been made by machinery, have a simple design and will be easier of construction. These patterns reproduced by hand can be further improved by any number of artistic curves. "2" in Figure 71 is the plain, common tip. It is not attractive to a well-designed stock because the under sides slope too abruptly toward the barrel. "1" is the British style of forearm tip made with buffalo horn, bakelite, ivory, and various other substances, including the forearm wood itself. If you are designing a fine rifle, Asiatic buffalo horn is the proper material to use, for it adds not only refinement but beauty and worth. You may file any shape you desire, but the plain British method is far superior to any other.

Design of Sides — Shaping the sides, from the end of the magazine and action, must be done with a sense of proportion, and this is an important consideration in the construction of all stocks. Starting at a point from the grip to where it begins to broaden out, it should be well rounded from the action to the guard and magazine. There are no set rules to follow, except to carry the lines well into the forearm and grip. Do not make the sides too thin, or too thick either, for neither answers the appeal of satisfactory outline. From a point half-way from the end of the receiver at the trigger guard back to the beginning of the pistol grip, each curve must be fully carried out, blending into the sides and pistol grip proper. When stocking a large caliber magazine rifle, the same rules particularly apply; and do not think that because it is of heavy caliber you must increase the thickness. Also, never cut out for the magazine cut-off on a Springfield rifle. Allow only for the cut-off to come down to a point where it is possible to remove the bolt; a cut-out at this point only spoils the appearance and is quite unnecessary. Some may wish to use the Springfield as a single-shot with a magazine full of ammunition, but while this is all very well in warfare, there is no need for it in a sporting arm. It is just as well not to cut out on the right-hand side of a stock, at the loading gate, any lower than the upper edge of the receiver; and when rounding this edge, do not carry the curve any lower than half the radius of the wood thickness. When fitting a Lyman 48 sight, always allow $\frac{1}{32}$-inch play between the slide and the stock, for when cutting out a recess for the slide under these circumstances, the stock at this point will assume a clumsy appearance. This sight requirement will be a guide to the thickness of the wood on both sides. Methods will be described later to cut off the sight base and slide, without cutting out any wood.

You will notice there are panels cut on some foreign-made arms, which extend out from the sides in different forms. This is perfectly correct for parlor furniture, but on a well-designed stock it seems ridiculous in the extreme to attempt to make hand work compete with a beautiful wood design. That part of a stock should, I think, be perfectly plain, relying on harmonious lines and handsome wood for its beauty.

Grips, Hand and Pistol — The finished design of a pistol grip on a rifle depends naturally upon

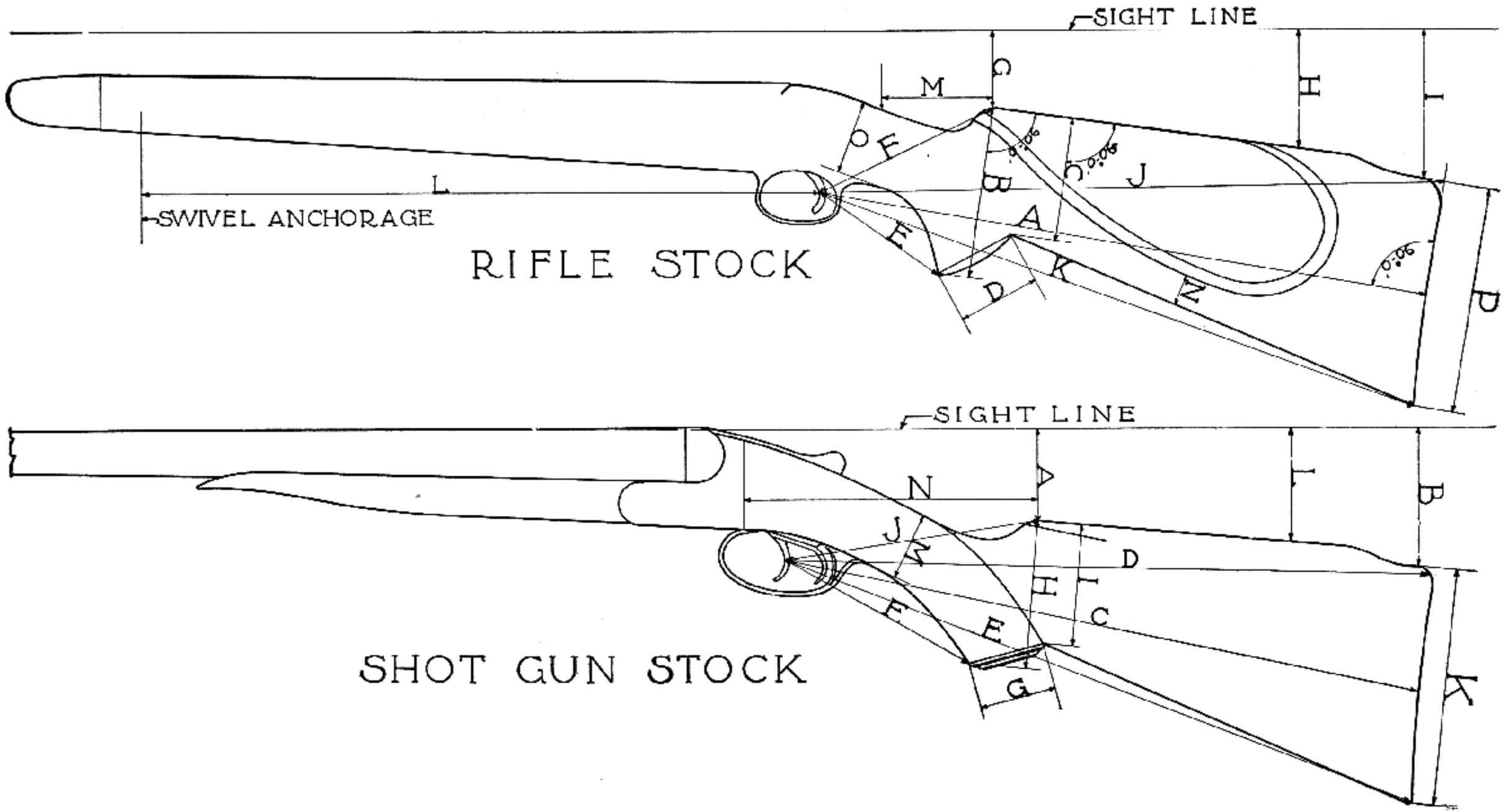

Fig. 72
Rifle and shotgun stock designs

how it was laid out to begin with. If the reader will follow Figure 66 he will have no trouble. Pattern and dimensions are important, but if you follow them there is no reason why you should not be rewarded by pleasing lines. Pistol grips on rifles vary, of course, with the form and size of the user's hand. On military arms they first appeared in connection with the German army rifle. The British also evolved a grip which looked like a stock upside down, but you would be greatly surprized, on handling it, to see how much better it is than it looks with its slight offset in the stock at the hand hold. We, on this side, were very quick to see the merits of this addition, even tho it was so inadequate and placed so far back that it did not really answer the purpose intended. To Colonel Whelen and Adolf Wandhammer must go the credit for the improved design of pistol grip. When Colonel Whelen and I first experimented with pistol grips, we placed them at once closer to the trigger, at the same time constructing them so that they snuggled the hand in the most advantageous position, obtaining thereby much steadier holding. The proper development of a pistol grip on military rifles has only been attained in the past fifteen years, and there is still plenty of room for improvement.

Figure 72 will give you an idea of how to obtain prescribed measurements of a pistol grip of a given pattern. A number of common mistakes will be made by the beginner, as in *D, E,* and *C*. The correct distance from center of trigger to edge of grip cap should be between 3⅛ to 3½ inches, and when this is accurately determined the other measurements naturally fall in line.

The circumference of the grip is, in a measure, governed by the size of the hand. When we speak of the circumference of pistol grip, we talk only in terms of a duplicate measurement taken from the stock which was made to suit a particular individual, and no specified size can be given for one who has never had a grip made to fit his hand. When one is making a new stock, subject the grip to repeated trials or until the hand can take a comfortable hold around the curve. You can form up a swell on the right side if you wish. It is permissible but not essential. A well-shaped grip is one which will measure 1¼ x 1⅞ inches and blend into the other lines of the stock. Never make a pistol grip on the full circle as some are made; this is a mistake of which many beginners are guilty.

The most graceful grip is one which blends in well with the bottom lines of the stock when looking at the stock from the side, with a continuous, harmonious line from the forearm to the toe. Another mistake is to have the pistol grip together with the cap extend down ¼ inch or more; it should be even with the bottom side. It is of vital importance to have the pistol-grip center directly under the comb. In forming up to the rear of the grip do not carry the outline to the comb; rather allow the form of the grip to merge into the stock a short distance to the rear of the grip cap.

The most preferable design for a pistol grip cannot usually be secured from factory stocks, as in most instances they are hurriedly made, with cheapness the most-sought-after quality. Attached to the Springfield sport-model stock is the only real grip, so placed and of such volume that it permits the changes necessary for its transformation into a satisfactory design.

I am obsessed with the idea that a pistol grip has no place on a fine shotgun, that it adds a degree of clumsiness and detracts from the otherwise sleek and racy lines. Notice the straight-hand grips on the best British doubles; also the Over and Unders, by Purdey, Beesley, Westley Richards, Woodward, Boss, and Powell. All these arms handle without effort and are noticeably smoother in action and more mobile than those fitted with pistol-grip stocks could ever hope to be. A grip on a shotgun stock should be constructed with every degree of forethought, having in mind such details as a perfect fit to the hand, correct length, distance from trigger guard, and small oval cap preferably of polished buffalo horn. On our American shotguns you will find grip caps of hard rubber with the maker's name around the edge, constituting not a very esthetic method for either advertising or embellishment, and, to say the least, a poor substitute for horn. A much neater cap can be made from a host of materials which would add greater beauty and efficiency than the present double-purpose ones furnish.

Single-Shot Action Stocks — These, you might say, are similar in design to shotgun stocks, but great liberties are taken and the variance is considerable and unending. In the case of the Swiss single-shot rifles, the makers have added everything possible for the comfort of the shooter, and more. This is likewise true of many of the beautiful American single-shot Schuetzens made during the past forty years. Today, American manufacturers do not have much demand for such arms, except by resale, and they are unprocurable. Take the famous Ballard or the Maynard (the latter made by the Massachusetts Tool Company fifty years ago), and the Stevens and Winchester. Some of the best stocking ever perfected in America was done on these arms.

Stocks on single-shot actions should, in the main,

follow the general outlines featuring other rifle stocks. It is interesting to formulate specific ideas which may be of benefit to users of single-shot rifles, such as modifying the upper and lower tang, and to place a pistol grip as often shown on one of the old single-shot Winchesters.

The Farquharson falling-block single-shot action has the tang and under-tang well shaped for a pistol grip. I have had several of these actions made for me in England, and am using them in connection with the .22-caliber Hornet cartridge. It makes one of the finest single actions for the cartridge, and when, in addition, the barrel is made by Vickers, Westley Richards, Niedner, etc., you have an extremely accurate combination.

A beaver-tail forearm is preferred by many on single-shot target rifles, but it is naturally out of balance and clumsy in appearance. Still, it adds to the ease of a steady hold, because it is flat on the bottom and very full on the sides. Further, it permits a natural position to rest the forearm, either in target or trap shooting, in the palm of the hand. Some of these beaver-tail forearms are made wider at the end than at the action; others have a gradual taper to the end, while still others have a very pronounced taper. Some are made full in the center, where the hand grips when in a normal position. I believe this last form the most attractive and useful.

Stocks placed on rifles such as models 86, 94, 95, 12, 97, and various other Winchester rifles, can be restocked to better form, also those of the Remington and Savage makes. Most of the small .22-caliber rifles in repeating models can be improved. I am of the opinion that Marlin has made the best stock in the .22 caliber, but the idea can be altered to advantage when constructing a new one. The standard forearms on all of these rifles are good, and it is difficult to improve their design. One would imagine, however, that all our American gunmakers labor under the belief that .22 rifles are to be used only by children, so diminutive is their size.

Shotgun Stock Design — A book might be written on this topic alone because of the multiplicity of opinions on just what the ideal stock is in shape, length, drop at comb, heel, and various other qualities. I have mentioned throughout this chapter different ideas of design. The shotgun stock may be taken as a standard of measurements, including such elastic points as cast-off and cast-on, balance, drop, comb, and pistol grip. There is one type which I have so far not mentioned, and that is the "Monte Carlo" effect. Its consideration may well be taken up here, since many of the ideas of change from the ordinary, originated in the evolution of that style of stock. When I make a new stock for a customer, after knowing the correct drop at heel, I leave the high line of the comb up 1½ to 2 inches from the butt plate, and drop it at that point 1¾ inches for shotguns and 2⅜ inches for rifles. In the final setting, I begin to cut this down until I arrive at the correct drop of comb. Some will require rather a high two-thirds distance measurement, which is at the top of the high point from the comb.

It is surprizing what this signifies in either a rifle or shotgun stock. I believe it is the only satisfactory method for correct measurement of any stock. I have found that with a drop at heel between 3 and 3⅛ inches, the height at point of comb should be 1½ inches, and at two-thirds distance 2 inches, and midway about 1¾ inches. These measurements are for double shotguns. For bolt-action rifles such as the Springfield or Mauser with the offset, I prefer measurements of between 3 and 3¼ inches at heel; at comb 1⅞ inches, which is bolt clearance, and at two-thirds distance between 2¼ and 2⅜ inches, midway between about 2 inches. Forming the step is a matter of choice, but modified step-off is the best when the lines blend well down to the top of the butt plate. The contour of the step-off is a delicate matter and never fails to be the cause of complaint when it does not accord with the owner's sense of beauty.

A comb must be placed in such position, especially on a shotgun, that it will be possible to handle the gun not only accurately but rapidly. A comb too far forward would be a bad feature, for it would be in the way of the thumb. A shotgun stock should be fitted so perfectly that the same hold will repeat itself consistently. Weight distribution governs shotgun manipulation as well as a correctly fitted stock, and must be considered seriously with the latter to bring about perfect coordination. Excellent practise for one who has never stocked a shotgun is to begin with a piece of soft wood, which should be first adjusted to the action and then formed up until a perfect fit is accomplished. The beginner will then, in a measure, have confidence and knowledge to proceed with a stock of given measurements as taken from the completed sample stock. In the soft wood you have chosen for a pattern, it is a simple matter to fit the metal parts, as you will not have to cut out except for the action and tang, together with the trigger plate. Next begin to form up the outside, not necessarily to fit any butt plate, for all you require is the length, drop, pitch, and cast-off, incorporating the ideas which I hope this chapter has imparted to you.

After securing all the measurements, jot them down on paper with a sketch showing the particular things you have done so that nothing will be forgotten, as a check on the second stock. If your gun has but a single trigger, a pistol grip is more easily installed than where you have to deal with two. I am sure that on a fine shotgun, however, the straight grip is to be preferred. Except in an army shooting school, it is definitely impossible to train shooters in general to assume the proper shooting stance, so we must continue to build stocks to suit their peculiar methods of holding. Often they figure that it is much cheaper to build a new stock than to change their habits. Such a change is one of the hardest things to bring about, for most men rebel against being told what is right or wrong, even tho they realize later that it is to their advantage.

A cheek piece placed on a shotgun stock, you must know, is not productive of special benefit unless you have a thin or narrow face. Its outline and symmetry must harmonize with the rest of the stock, else it will be an odious attraction. With many it is merely a matter of choice, and as part of the shotgun ensemble it is comparatively rare. The heavier such a gun, the heavier and fuller the stock should be at the comb, which obviates the necessity of a cheek rest; its presence then would act only as a detraction in speed of handling. The comb made with a comfortable thickness helps against recoil, and encourages more accurate aim, providing the proper cast-off is given to the stock together with the correct pitch.

On occasion we encounter stocks with identical measurements at comb and heel. These dimensions are abnormal and may be changed, often with definite advantage to the Monte Carlo comb shown in Figure 69.

There are so many conflicting ideas in shotgun stocks, both for field and for trap use, that the only natural procedure for the novice is to have a stock fitted correctly in the first place by a craftsman who has skill and experience; for then, and only then, will he appreciate what it really means to shoot a gun with comfort, accuracy, and confidence.

Abnormally Formed Stocks — In the event of a shooter losing the sight of the right eye from mishap or defective vision, no better encouragement can be given than to recommend the side rib shown in Figure 73, a monocular gun which is used by a man who lost the sight of his right eye. The same effect can be obtained with a gun modeled as if the stock had been bent over or so fashioned. The illustration gives an accurate idea of a principle which is the idea of Mr. Frank Hogan, and his work at the traps testifies to its suitability for the purpose for which it was made. The disadvantage of having a stock with a cast-off as much as 3½ inches is that in firing the left barrel it shoots to the left; in addition the gun would handle clumsily to any one used to the orthodox stock. A single gun would not appear nearly as clumsy in this respect as a double.

Mr. Hogan's idea consists of a master piece of flat steel running from the muzzle back a distance about 20 inches with two ivory bead sights attached. This rib is fastened to the left side of the barrels by two brackets; one at the muzzle and the other about 18 inches back from it. The sights on this rib are set over 2 17/32 inches at the rear and 2½ inches at the muzzle. He has broken 98/100 clay birds with this style of gun, and on another occasion has run 147 straight. It proves that any one who has a similar disability may benefit by this addition rather than by a bent stock. For the latter it would be necessary to have the stock made of walnut with the grain curving in the bend; the tang of the action would have to be bent, also, together with the trigger guard; consequently it is advisable and much cheaper to make a rib, as shown according to Mr. Hogan's idea.

A try-gun is an odd arm to the average person, but one which is used a great deal in England to fit gun stocks. It is possible to secure length, drop, cast-off, and pitch with this contrivance. There are comparatively few of them in the United States, as only a limited number of gunsmiths understand the proper methods for fitting even the normal person. I have had two recent examples of this. One man was fitted erroneously with a 15-inch stock when he should have had a 13½ inch, and another a 13⅛-inch length instead of 14¼, while the drop on both stocks was out of all reason. Correction in both instances ended in a most gratifying result. Should you be so fortunate as to be measured with a try-gun by one who knows how, cherish the figures sacredly and check up on your every finished stock. The British gunmakers are exact in their measurements. Practically all try-guns are made in England, and every maker who conducts a more or less extensive business in fitted stocks should have one. The expense, increased by a generous duty, is a drawback to their extensive use in this country.

I have eliminated as far as possible all numerical measurements on stock design, and use figures only where it is necessary to illustrate a specific model. Most measurements will be given in the following chapter. They vary greatly, and it will be my

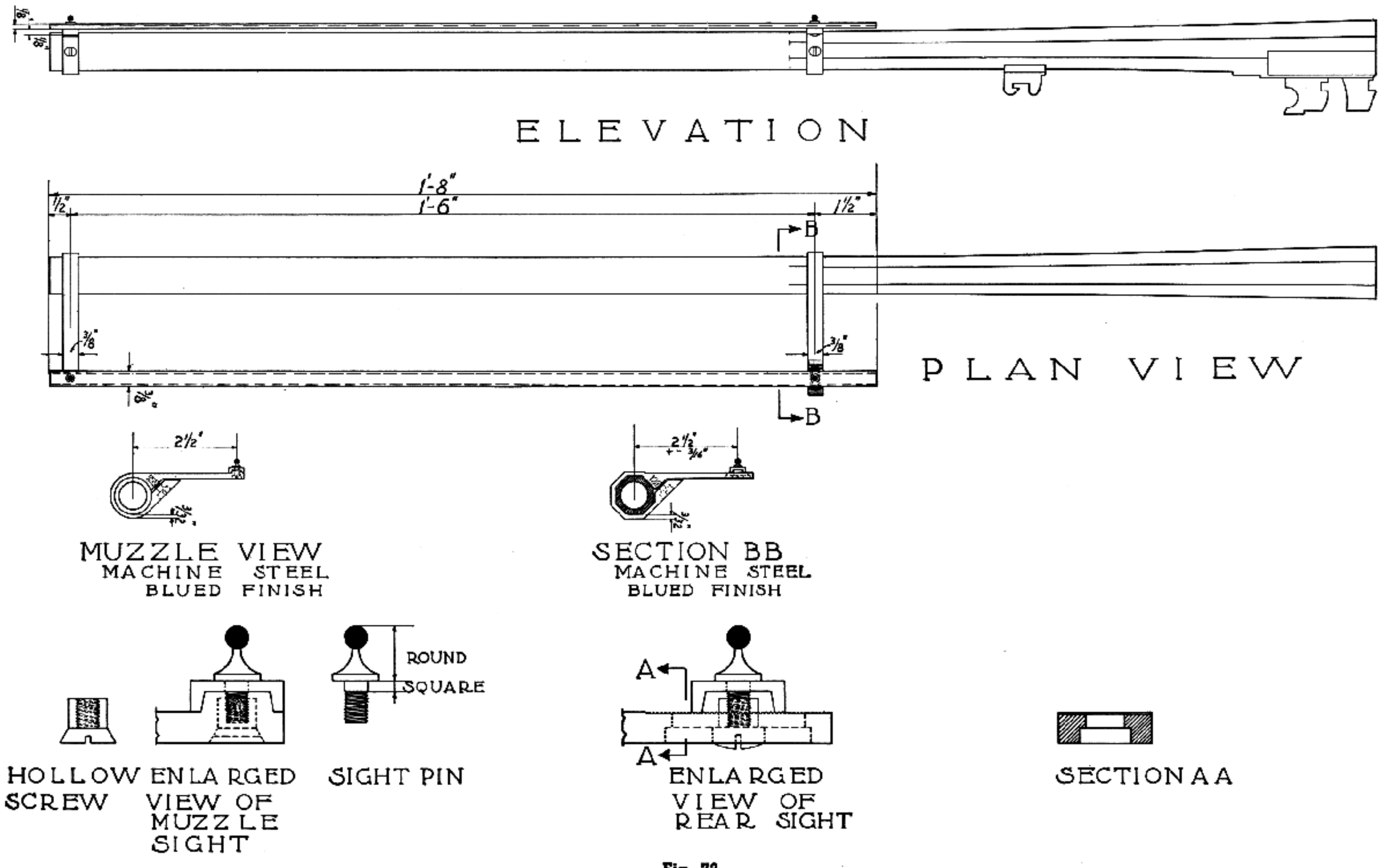

Fig. 73
Offset rib used for monocular vision

endeavor to apply myself to the necessary and established ones. Figures are not indispensable to stocking a gun except in the length, drop, cast-off or cast-on, pitch, length of forearm, distance from trigger to edge of pistol-grip cap, and balance. All other dimensions and contours are attained with the aid of the eye, which is our principal guide—that and our creative ability. This, largely, is a sense which is congenital when at all present, and finds its expression in a love for beauty which prescribes and directs the work our hands are eager to perform.

Satisfactory achievement in any worthwhile venture naturally takes time, but in the end, if you are persistent and loyal to your desires, your efforts will be rewarded. Sad to relate, we have among us men who regard the gun only as a tool to slay, and more than likely stow it away, possibly without cleaning, after the hunting season, until the next one follows. The serious gun crank resents this type, for he is usually disinterested in the scientific aspects of the game and lacking in creative ability, without which it would have been impossible to bring about the present high state of beauty and remarkable effectiveness in every modern firearm.

The work outlined in this arduous chapter will not be found easy always, but I can assure you that it is intensely interesting and worthy of your every effort. My earnest advice is to proceed slowly in all your undertakings, curb impatience, and do not expect immediate perfection. The slower worker will save much time by avoiding mistakes, and this time can be devoted to productive thought for better ideas as the work proceeds.

Final work on stock and forearm consists of checkering to obtain resistant surfaces which enable the user to handle the arm with assurance, and fortunately on the finished product it forms an attractive decoration. Actually, it is not essential, but when masterfully completed it is an unfailing mark of distinction that identifies the higher type of guns.

Probably many will disagree with me relative to my choice in design of stocks; however, I am certain that under no circumstances could I have done better than to take for models the superb products of British gunmakers. My efforts have been untiring to combine simplicity and practicability with the British ideals, so that they will be within reach of the American sportsman and not beyond the accomplishments of the amateur.

CHAPTER IX

Laying Out the Stock—Inletting the Action

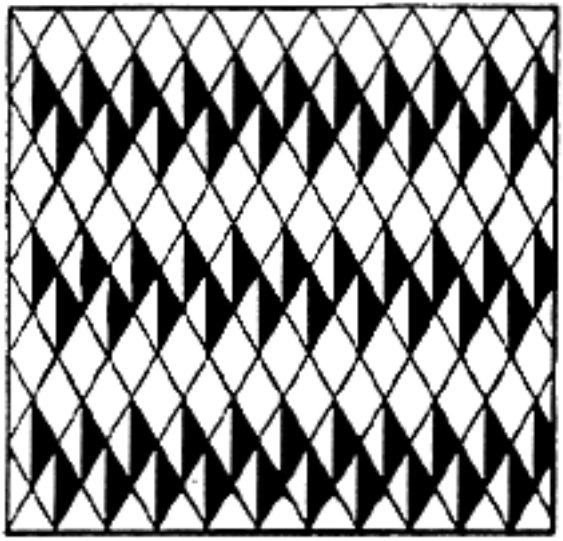

CHAPTER IX

Laying Out the Stock—Inletting the Action

THE outstanding ambition of every amateur gun enthusiast is to make a stock, and it is my earnest endeavor to describe this operation as completely as possible, so that the reader will be carried step by step through each fascinating detail in the process. With long experience as a guide, I realize the many difficulties which are bound to be encountered; but if patience, accuracy and forethought are practised, these should not be insurmountable. In this work, more, almost, than in any other, forethought must be used and each move carefully planned before being executed if satisfaction and success are to follow.

The general principle of inletting is the same for all guns, differing only in the form of cut coincidental with the varied contours and actions.

Select a suitable blank from the list of woods described in Chapter VII (Selection of Woods). Have in mind clearly the desired stock design, which is to be completed according to prearranged scale, dimension and finish, not losing sight of the required thickness of wood at points corresponding to butt plate, center of stock and action. If a cheek piece is planned, select a blank 2¼ to 2½ inches in width, which is necessary to include the limits of its outline. An essential measurement is across the end of the blank where the action is placed, which should be at this point two inches for a straight stock without a cheek piece. Drop, cast-off and length of butt plate are additional essentials demanding constant care in the provision of sufficient wood in the shaping process. Lay out the blank for measurement as given in Chapter VIII, illustrated by Figure 72. These measurements may be accepted as generally correct. It will be of material service to cut out a pattern, laying the top edge flush with that of the blank. With a pencil, trace identical lines on the rough blank, allowing sufficient wood to finish with, not forgetting length. Figure 61 applies to a stereotyped pattern applicable to shotgun and rifle stocks. When using the shotgun pattern it is most important to follow the method described for laying out of blank, including use of pattern, since at their surface of approximation all shotgun actions are not on the same angle. An adjusting block, so called, will take care of most angles at the back of the action; but for the sake of certainty reference to the accompanying instructions should be made constantly.

The Springfield is the most popular bolt-action rifle at this period, and I shall begin with a descriptive method for inletting. Whatever finish for the metal is intended should first be completed,

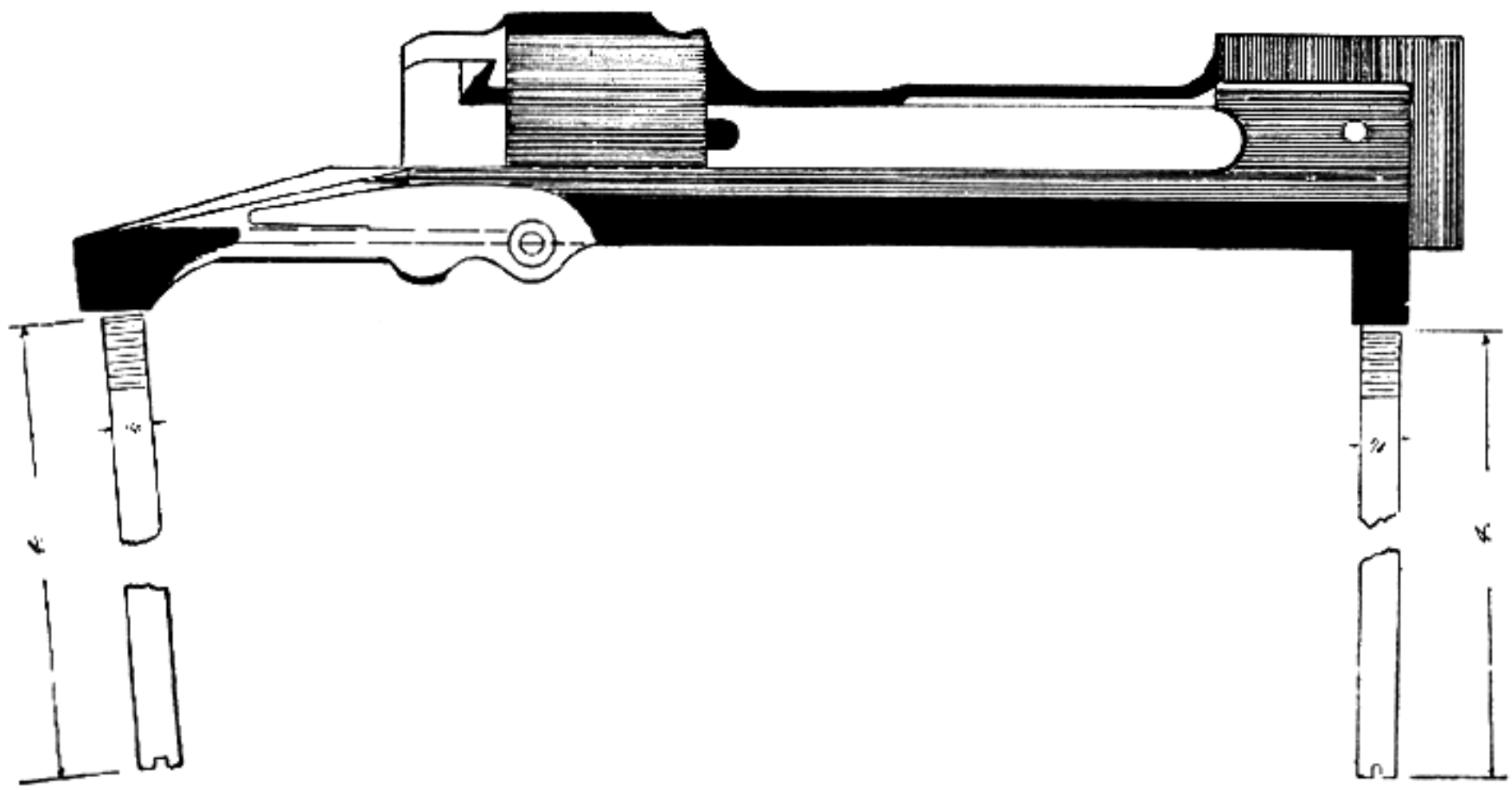

Fig. 74
Springfield receiver with locating screws in position

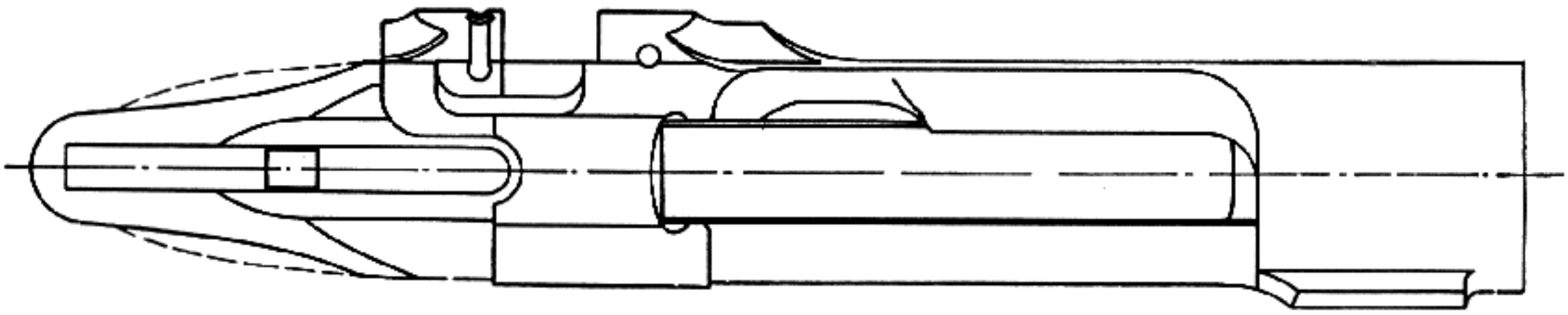

Fig. 75
How a Springfield receiver is ground at tang for more graceful outlines when restocking

in the sense of receiving its last operation in polishing. Leave barrels, ramps, sight bases, swivel bases, etc., in the white, but polish for fitting into the blank. Make two long screws as shown in Figure 74, and grind out the tang of the receiver as shown in Figure 75. Grind a 1/32-inch radius on the end of the receiver next to the barrel. To study the cuts in an old service stock would be invaluable for proper location of guard, barrel, etc. Study the action in Figure 74 to gain the correct knowledge of such important points as the recoil shoulder, tang of the receiver, trigger guard, flat under-surface of the recoil shoulder, rear-guard screw bushing, taper of barrel, cut-off, projection, sear, and trigger, the radius formed on the magazine, also at the end of the tang of the receiver, front and rear of guard, and the projection on the right side of the receiver near the barrel. There are various concave and convex sections and cut-outs to be considered also.

When inletting any action, you are working reversely, for the solid portion representing the action, etc., is cut out and the openings remain. Notice on the old stock that there are places showing machine operations. These were executed in a few moments by a fast-revolving cutter, but the same operation will take hours of painstaking labor to accomplish by hand; however, the result should and very likely will be of a higher quality in every way.

Before proceeding to lay out primary lines on the rough blank, study Figures 71 and 72. As an initial step, square the top with both sides and lay out lines such as shown by lines in the drawing, allowing enough margin for finishing. Having the top and side surfaces planed square, scribe a line in the center of the blank from the tip to the butt, continuing to and including ends and under side. With a die-maker's square check this line from one side only, and continue laying out the work from it. The measurements for drop are taken from this side only, in order to preserve an exact center. Now place the magazine and receiver, together with the trigger assemble, against the side of the stock in its required position, allowing enough over all to finish the butt. The amount is determined according to instructions given in the chapter on design of stocks. After the receiver and magazine are in place, mark the tang of the receiver and the end of the trigger-guard on the flat side of the blank. Transfer these lines to the top and bottom of the blank with a try-square; they are the lines you will work with. Take all measurements of the guard forward; measure the distance from the end of the trigger guard to the magazine, marking at right angles with a line, and measure the length of the magazine and draw another line in the same manner. Having these two lines for length, with the aid of a divider lay out the width of the front and rear portions of the magazine, from the center line, connecting these two and mapping in this manner the site of the first cut-out for the magazine.

Figure 76 gives correct dimensions of the bottom side of Springfield guard. With a 1/2-inch auger bit remove this center, having first outlined it with a divider. Do not encroach on any line nearer than 1/8-inch for the reason of the tapering of the magazine from the bottom to the top. Center-punch the centers of the divider marks, and bore this out, removing the center by cutting out the thin webs with a broad flat chisel. At this stage proceed slowly, removing wood as far as the tracings show you may go, until the magazine enters snugly. Aside from the openings made with brace and bit, the entire operation is accomplished with different-sized chisels. The broad flat ones are used for the sides, the narrow ones for the ends, and the round gouges for the radii in the corners.

After the magazine begins to enter, mix a small amount of lampblack with sperm oil, and make a swab tied to the end of a small piece of wood, the end formed as a handle. With this apply a thin coating on the sides of the magazine in order to mark definitely the tight places. Gradually remove these until the magazine enters freely and evenly, showing a bearing all around where the metal touches the wood. As the magazine is entering, have a try-square at hand and place it on the bottom of the former, testing against the side of the

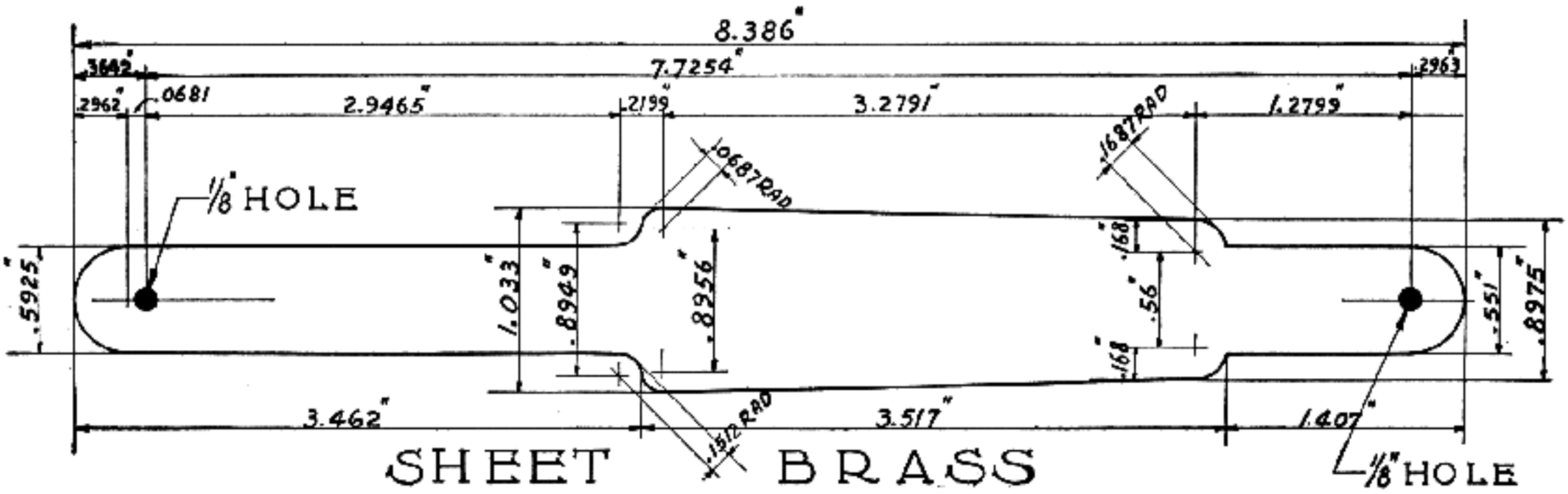

Fig. 76
Springfield guard templet for laying out purposes

blank from where the lines were taken. By this method the magazine is kept from entering the blank at an angle.

The projection on the front tang of the guard prevents complete introduction into the wood. Use lampblack on the face of this and with a small mallet lightly tap the top so that there will be made a good impression. Use the dividers to locate the center, and with a ½-inch bit bore in ½ inch; the bit is the exact size of the projection. Continue down with the guard. Notice that the guard is plainly narrower in its front portion than in the rear, and that the trigger guard slopes gradually downward from this point. Keep the top of the magazine parallel with the top of the blank, permitting the under side to come as it may, since allowance was made for this when the under side of the blank was cut out. Continue to fit in the magazine until the impression of the rear and front tang shows. Now proceed to enter these in the blank. You will notice on the front tang that there is very little support left between the projection and the end, so care must be taken to get a perfect fit on the radius. In proceeding downward, notice that the projection contacts with the bottom of the ½-inch bored hole. Relieve this just a little, continuing until the guard is in place, so that there will be a bearing at this point. If made too deep, most of the center support of the recoil shoulder will be removed, leaving only the sides for a bearing, in which case it will be necessary to fit in a steel block to restore adequate support to the shoulder. Since this is the most important point in recoil uptake, its bearing between metal and wood must be rigid.

When letting in the guard, allow $\frac{3}{16}$-inch clearance for the receiver. Going back to the trigger guard, it will be noticed that the floor-plate catch, in order to operate freely, is in a cut-out near the magazine; therefore mortise for this upon completion of the inletting. Do this before inletting the guard. You will again notice a slight angle on the radius at the end of the tang, on the guard, which is tapered to the bottom. Make these cuts on a wedge effect, which assures more perfect fit when the tang is finally let into the wood.

With the guard in place, bore completely through the front guard-screw hole with a hand drill, ¼-inch diameter, using the hole in the guard as a guide. When drilling, keep the drill at right angles at all times. Remove the guard from the stock and replace it after enlarging the hole to $\frac{9}{32}$ inch. Connect the long screw, making it possible by first attaching to the receiver to lay out the latter on top of the blank. With a diemaker's square, check the center of the rear end of the trigger guard for any deviation from center line. Should any have occurred, allow for it on the tang of the receiver, establish a new center line and make the center of the tang of the receiver continuous with it.

On the rear of the magazine is an extension which projects up in the receiver magazine cut. The magazine and receiver must fit as intended. If a straight edge is placed on the inside of the magazine at the rear, there should be revealed metal of the thickness of the above-mentioned projection, which, according to scale, projects into the magazine opening approximately ⅛ inch. The eye will tell and is the only guiding agent to determine whether or not the extension can enter the receiver in the right position. Done in this manner, it will be a check on whether receiver and magazine are being brought up together properly. The tendency is to place the receiver too far forward.

With a try-square, draw a line across the blank at the recoil shoulder and end of tang. Remove the receiver, measure the width of under side, and with dividers lay this measurement on the blank, scribing the lines the full length of the receiver. For a check, scribe a line across the blank at the end of the receiver where the barrel screws in.

Work can be greatly facilitated by first breaking the barrel out from the receiver, using for this a barrel vise as shown in Figure 87, Volume II. It is possible to fit the barrel and receiver together, but to simplify the operation, the receiver should be fitted separately. Assuming that the beginner has no barrel vise and must fit the barrel and action together, I shall carry out my instructions accordingly.

When starting the action in the blank, the fit around the rear tang of the receiver should be close and the recoil shoulder show a solid and even bearing. The under surface of the receiver between the recoil shoulder and the end of the magazine should always bear evenly and parallel against the wood; likewise from the rear part of the receiver to the receiver tang. The cut-outs in the wood must correspond with the contour of the metal.

When first letting the action into the wood, use a light coat of lampblack on all contacting metal surfaces, and be very particular not to remove too much wood at each cutting, which is often encouraged by applying too much lampblack to the metal. Only a very thin, light coat is necessary to give the desired impression. A flat chisel, about ¼ inch to ⅜ inch, is used mostly; also pattern-maker's gouges for inletting the barrel, the width being between ½ and ⅝ inch with a gouge for the rear tang.

Before penetrating very far with the receiver, the barrel letting-in process should also be started; and when let in the wood, half-way to the short taper, draw a pencil mark along the sides, keeping it well in the center. The tang of the receiver is also down in the wood by this time, therefore hold a bearing on the flat under surface at the screw hole.

Check up between the rear of magazine and receiver to see if they are coming into correct position; also check with your eye to see that all parts are going in at right angles. This may be done by using a 12-inch combination square, laying it on the inside of the bolt-slide channel of the receiver opening. With the square in position, the eye sighting along the blade detects the slightest variation which may have crept in. When approaching the rounded sides for the action, there will be a tendency to work too far to the left; guard against this. The trough for the barrel has at this stage begun to take form in the wood. With a scriber, draw a line the full length on both sides, well in against the barrel, and with a broad thin flat chisel, take fine straight cuts down the sides. Do not try to hold the radius of the barrel for fear of rounding the edges too much by forcing the wood out, as this leaves an opening when finished. Cover the bearing surface of the barrel with lampblack and only remove the dark impressions left by it. Extreme care is necessary to remove only that amount of wood which corresponds to the radius of the underside of the barrel. The long headless screw should be kept in place.

At the forward point in Figure 77, notice that the recoil shoulder is a true square; the guard extension lug-hole can only be seen coming up to the proper distance to meet the recoil shoulder on the receiver. At the radius point will be noticed the rounded bearings of the receiver at the rear. This greatly increases the strength of the wood at these points when the receiver is imbedded, and also helps absorb the recoil, for by forming the rounded section, you place the second recoil shoulder at the rear, which is impossible in a machine-made stock. One more position which should not be overlooked is in Figure 75, which is the projection on the right side of the receiver. The sides may be fitted very closely, but the wood should be relieved away from the radius or curve which blends in on the side. There should be just a little clearance at this point as you continue to fit in the receiver, because it has a wedge effect while bringing the receiver down in the stock. If these instructions are not followed, it is liable to cause a check ahead of this shoulder and in very brittle wood it may extend a considerable distance.

Having the barrel and receiver practically in position, notice is taken of the odd cuts for the projection on the left side for the magazine cut-off. This houses the cut-off and also the shell ejector. When fitting in the rear tang of the receiver, do not allow too much wood to build up around it, but continue to remove the surplus forming the handhold up to a point about 2¼ inches back, where the comb begins to form. The reason for paring down along the sides of tang is that many times the end grain will chip out in removing the receiver.

When fitting in the receiver it should first be fitted to half its height or half the diameter of barrel and receiver. Receiver and barrel should assume a snug fit between the wood and tang. To avoid future splitting of the handhold or grip it is a good plan to relieve the wood adjacent to rear of tang for a distance of 1/32 inch.

A slight pressure should be evident between the barrel and the tip of forearm when the barrel cut-out is completed. This should not be so great but that a slight pull, one from the other, would separate them about 1/32 inch. From the tip back to the receiver on the under part of the barrel there should be a good 1/32-inch clearance between this and the wood; however, the side bearing should

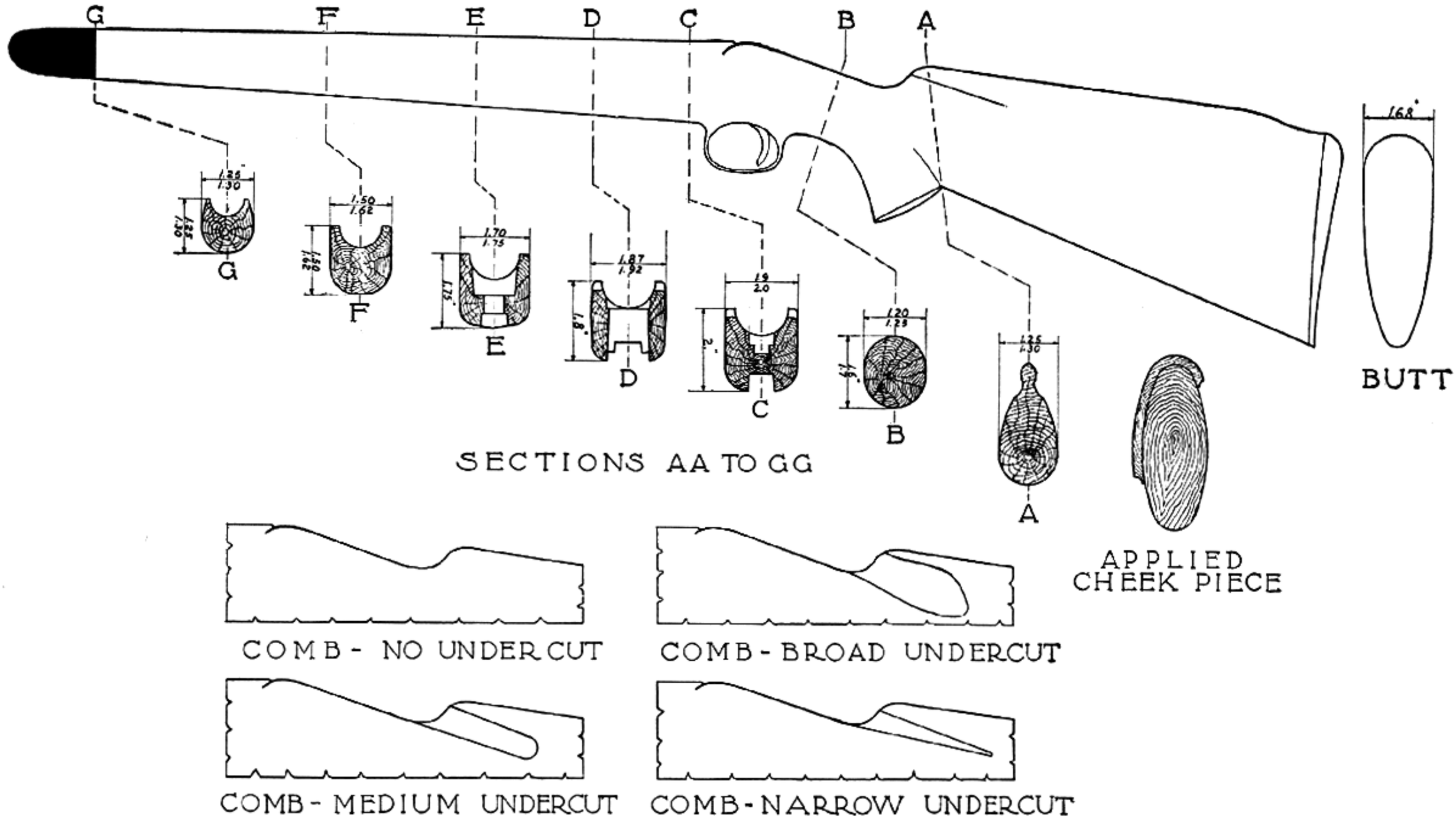

Fig. 77
Sporting stock layouts for Springfield Model 1903 rifle. Sectional views of average measurements for laying out on stock blank

be tight. The same rule is applicable to target-rifle forearms. When fitting a barrel band for either a sporting-type or target rifle, cause the band to bear in the wood with a clearance of 1/64 inch between barrel and band. No undue pressure should ever be applied to the barrel.

When work has progressed to this point, drill the rear guard screw-hole. First make a pointed screw or use an extra guard screw, cutting it off to 1/4 or 3/8 inch on the threaded portion and file to a point in the lathe, or drill press. Then with a hack-saw on which the teeth have been ground down on the sides, cut a screw-driver slot in the center of the point, and screw this in the tang of the receiver. Place the barrel and receiver in position, and gently tap the tang, producing a center mark from which to start drilling for the guard screw-hole. With a center punch, increase the depth of the mark. Then use the centering device as described.

Drill-press Centering Device — Figure 78 illustrates this centering device, which is clamped to the table of the drill press by a C-clamp. Such a fixture is used to drill holes in line and is the only method by which holes will come in the exact opposite location.

This is a very simple fixture to make. The base is a piece of 1 1/2 x 2-inch cold-drawn steel with a 3/8-inch reamed hole to take a 3/8-inch piece of drill rod which has a center on one end. Line this up on the table by catching the drill rod in the chuck, and bring down the spindle, the drill rod entering the hole; then clamp. Remove the center and place it in position in the hole and the work on the center. With the proper-sized drill, feed it down until it meets the center. There are endless operations such a fixture can perform on the drill press. Being such a simple centering device, it is possible to clamp it in various positions, not only in stock work, but in metal work as well, where an offset hole is required.

After the centering device is set up in the drill press as shown in Figure 78, with the 3/8-inch rod placed in the hole in an upright position, the guard screw-hole may be drilled. Set the trigger guard in place and use a 1/4-inch drill in the rear guard screw-hole as a guide. Place the center in the mark made by the center punch and bring the drill down into the guard screw-hole. This method alines the hole perfectly. Now remove the guard and open the hole already drilled with a 21/64-inch drill, still holding the stock in position on the center in the fixture. Drill up to the center. Remove the drill and continue drilling until there is only a thin web left, then insert the guard-screw bushing. The rear guard-screw bushing is very essential; it not only separates the receiver and the guard, but it also gives the correct distance between the receiver and the guard. I always exercise great care in inserting this correctly, so that the two holes will be in perfect alinement and the bushing firm in the stock.

If a drill press is not at hand, and you have no centering device to work with, the hand drill answers just as well when used with due care. Proceed as follows: From the center mark in the rear of the tang seat, with a 1/8-inch drill, drill half-way to the rear guard-screw hole, which has been used as a guide to direct a 1/4-inch drill to the same distance, the two openings meeting with the centers slightly off. Allowance should be made for this when drilling. With a 3/16-inch drill open the 1/8-inch hole to the center, meeting the 1/4-inch one drilled from the bottom. Remove the guard and check to see how close the two holes meet. If they are not quite in the center, correct on the succeeding drilling.

With a 1/4-inch drill starting from hole in the tang seat, meet the 1/4-inch hole from the bottom; then, with a 21/64-inch drill, open to this width and insert the guard bushing. When drilling these holes, grind the drills until they are quite pointed,

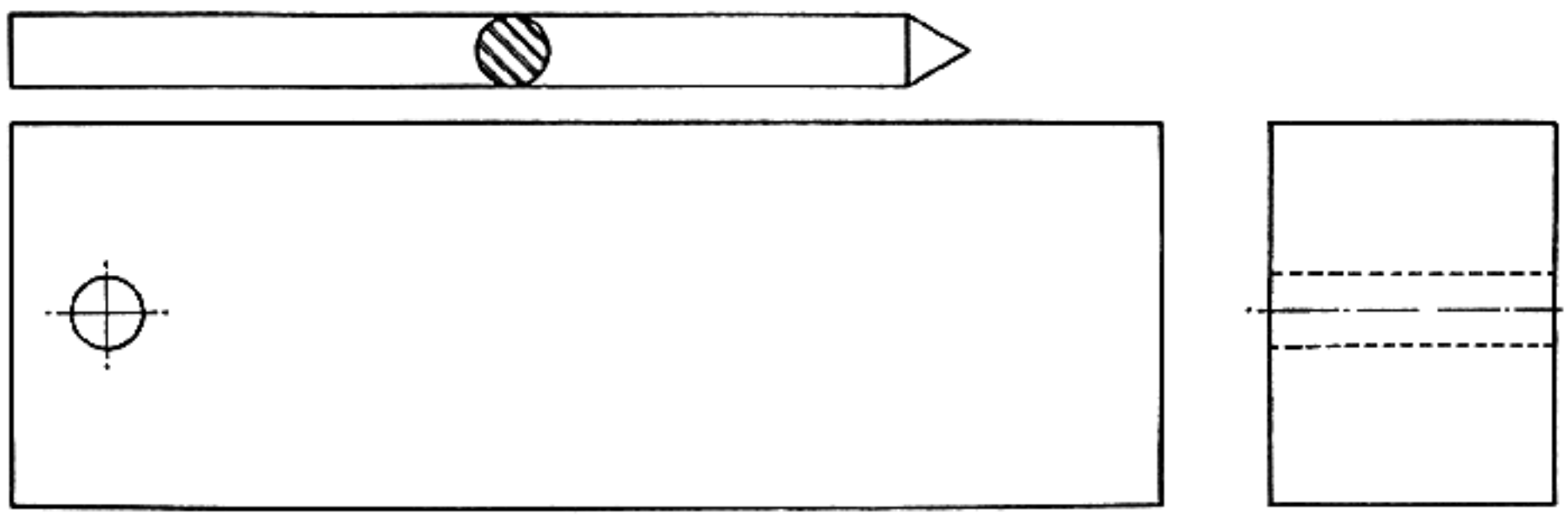

Fig. 78
Centering device used on drill press to aline screw holes when fitting actions into stocks

with a considerable amount of clearance so that they follow the center more readily.

With the bushing in place, finish fitting the guard to the receiver. When the receiver with guard is fitted to the stock, and before the front or rear screws are tightened, an opening of about $\frac{1}{32}$ inch should show between the guard and receiver. The front screw should be tightened first when the two guard screws are drawn up, pulling the guard up to meet the receiver, and approximating the barrel at the tip of the forearm, allowing a slight pressure to spring them apart as described. Now seat the rear screw, pulling it up very tightly, binding the receiver and guard together, so that they will be immovable when recoil takes place. When this screw loosens, moderate accuracy is usually the result. For this reason, in stocking a target rifle, after pulling these screws up rigidly, I always place anchoring screws in front and rear.

The guard may be fitted somewhat tight, so that a blow with the hand or a small piece of wood will seat it in place. Light taps with a small mallet may be used, providing you do not use the mallet as a hammer to drive in the parts. When the guard is to be removed, hook the index finger in the trigger guard and tap lightly in front of it on forearm, which easily removes it from the magazine mortise. When fitting in the tangs of the rear and front of the guard, the edges naturally blacken the sides. The sides must be tight, or the fit must be so that metal and wood come together with slight friction; therefore, do not be deceived by the lampblack marks and remove more than the necessary amount of wood. Light conditions will at times deceive, especially when shadows convey the impression that more wood should be removed than necessary. At the tang of the receiver, the line of approximation must be close, but not to the extent that wood is broken out when removing the former from the mortise.

Remember that all parts must fit perfectly and the work proceed slowly and with patience. Forethought, good judgment and determination will solve most of these difficulties. Bring into play those tools that are the most convenient to use. I might tell you to resort only to those designated for specific purposes, but on the whole it would be poor advice, for I have found that many men "use a shovel to better advantage where a pick should be used."

When fitting the barrel to the forearm the channel should be slightly narrower than the barrel, for when you scribed the lines along its sides, you turned the scriber inward. The barrel rests on these edges not quite half-way to its depth in the groove. Work away the lampblack which has left its tracing on the bearing points, using extreme care to remove the thinnest cut possible with more freedom in excavating the heavy bearing points that are made by the receiver in the wood. Finally the barrel will rest on the bottom of the radius, but not seated to quite half its depth for the reason again that the lines are made to encompass a narrower space than the barrel. They should be obliterated and new tracings made which impart the illusion that the space between will be too great; this makes one doubly careful. Wide thin chisels are used subsequently and for final hollowing-out purposes; to avoid tearing the wood they should be brought to the keenest edges. The cuts must be straight down, overlapping each other, and scarcely scraping off the surface. Lastly, the radius at the bearing points shown by the lampblack should be removed with round pattern-maker gouges.

When the final fitting of the guard is in order, assemble the floor-plate catch. You have left between $\frac{1}{8}$ and $\frac{3}{16}$ inch to pull the guard in place. At this stage of the final fitting, pull the guard and receiver together with the front and rear guard-screws, which furnishes the opportunity to make any final necessary correction.

Remember when using a thin flat chisel to make the cut straight down. Beginners are liable to undercut the sides, which calls for a deeper cut and results in an unsightly and disappointing opening. The latter mistake is common not only to the novice but to experienced cabinet makers and carpenters in their first attempt to inlet an action. It is far better to cut a slight angle in the opposite direction than to hollow out the wood, thereby enlarging the bottom.

Do not lose sight of the fact that the top line of the stock must be held straight as the cut-off housing is fitted, and that the recess is considerably deeper than in the service stock. Keep it straight from the tip of the forearm back to the end of the cut-off with the slope of the receiver tang, allowing the cut-off to come in the center of the plunger catch to remove the bolt. Notice also that the wood projects high over the cartridge opening on the right side. It must be removed from the radius of the forward projection, back to the outlines of the tang; this can be done while the receiver and guard are assembled and then completely finished on the final shaping.

If one should wish to restock a number of Springfields in the course of say a year, it would be better to secure an extra receiver from the D.C.M.*, using it as a model when inletting this

* Director of Civilian Marksmanship.

part. It takes less time to inlet the receiver alone, but when it is done in this manner and the barrel is afterward screwed in place, the succeeding steps are identical with those described for the inletting of the two parts jointly.

To do a refined job, sandpaper carefully the entire mortised surface, being careful not to touch the edges. A workman with some experience and with sharp chisels may, by the exercise of a little care, inlet an action so smoothly that sanding is superfluous.

Before laying out for trigger and sear seat remove all metal parts and observe again how this was done in the old stock that is being used for reference. Make the opening no larger than the space necessary to clear a full travel of the sear and trigger when operating.

Templets are used in turning out stocks on a production basis, but the beginner is advised against their employment except in an experimental way. In Figure 76 the proper dimensions for a Springfield guard and magazine templet are given, which in this case is completed 1/32 inch less in all directions, so that when inletting, extensions may be made to a hair-line fit. If the student has no sketch such as Figure 76 illustrates for other arms like this to go by, a good plan would be to secure a piece of No. 18 gauge sheet brass, and scribe first a center line, and square one side; then with a combination square you may scribe two lines at the top and bottom of the sheet, representing the front and rear guard-screw holes the correct distance apart. Then with the dividers lay out widths and connect these, forming the lines rather deep. Allow all measurements to be 1/32 inch smaller than the figures on a side. Templets should be 1/16 inch smaller in width and also in length. Never make a templet by cutting out paper from sample pieces, pasting the pieces on brass or tin, and filing to the paper; rather, measure the templet to be made, and lay it out with accurately scribed lines. File to the center of the scribed lines and drill two small holes on the ends for the purpose of locating the templet, and holding it in position for scribing.

I am firmly convinced that almost any man who has seriously completed his first job of inletting on a Springfield is entitled to a feeling of superiority over the average gun crank. Many mistakes will have been made on the first one; the second will, however, be much more simple, and the experience gained is sufficient to do this work on any bolt-action rifle, the essentials being the same except for minor differences, such as location of screw holes, side magazines, trigger guards separate from magazine, etc. No high-grade bolt-action rifle is more worthy of a fine, well executed stock than the Springfield or Enfield, especially since their popularity is bound to continue for years to come.

Due to difference in shape and construction of a Krag action, the method of inletting is not quite the same as for the Springfield M-1903 action. The magazine and action are combined, necessitating rather odd cuts, but generally speaking the same mechanical rules apply to both.

The first operation is to lay out the magazine and action in proper relation to the size of the blank, having first scribed a center line the full length on top and bottom. Next, measure up to the recoil shoulder. The magazine on a Krag is part of the action, and the recoil shoulder is one solid piece which forms the rear end of the magazine. Scribe a line at the forward end of the magazine and place another line at the end of the receiver. Scribe these lines across the blank. The receiver end measures 1.3 inch; as with dividers, lay this out on the receiver cross-line, also at the recoil shoulder. Then draw lines between the two, extending the lines rearward at least one inch further since the diameter of the receiver is the same at the front as at the point. The full-length line of the left side must be held, for this continues from the end of the receiver to the magazine cut-off. You will notice on the left side of the recoil shoulder a recess, which has rather an odd form. Remember to lay this out on the top of the blank, as it acts as a recoil shoulder. Many make the mistake of cutting it out square with line on the left side.

When the above scribing is completed, lay out the center section for removal by drilling. Do not approach nearer than 1/8 inch to any scribed lines. Measure downward from half the diameter of the receiver to the bottom of the magazine, and mark the depth on the right side of the stock. This is the final depth when the action is fitted, and with a 3/8-inch bit bore out the surplus wood. Next, cut out the recess for the magazine. Remember to keep the larger radius in the front of the magazine and recoil shoulder at the left side.

Before fitting in the magazine and action, grind the tang of the receiver with a radius on both sides, just as you ground the Springfield receiver tang. This makes a much neater finish than to allow a sharp edge at the end. Cover the contacting surface of the magazine with lampblack as previously described for the Springfield. Gradually work out the wood for letting in the magazine action and barrel. As these parts begin to go into place, scribe the outline and rough out all the surplus wood. Continue to spot and fit, slowly and carefully, until all metal parts are properly placed,

leaving no open seams between metal and wood. There should be no hesitancy in constantly resorting to inspection of the old stock to familiarize oneself with the general outline of the cuts and avoid thereby heartbreaking errors. As the Krag's recoil shoulder is at the rear of the magazine, on the left side, it is very important that the wood in this location fit closely against the magazine.

The guard-screw holes are located the same as on the Springfield, except that in this instance there are two to locate, front and rear. The pointed screw, made for the Springfield rear guard, may be used to locate both. Use it first in the front screw hole, then in the tang, tapping gently in order to secure an impression. Center-punch the two holes deeply. The front guard-screw hole is straight; bore it through with a small hand drill, following with a $^{17}/_{64}$-inch drill ground pointed to enlarge the hole to the required size.

With a small caliper, using the old stock again as a guide, measure the thickness of wood between the magazine and the bottom of the stock, allowing a full ¼ inch for a tolerance to work to. After measurement has been made, remove the wood from the bottom of the blank to the required thickness, keeping in mind that the rear of the trigger guard slopes gradually, for which a slight angle must be allowed.

To let in the trigger guard, place barrel and action in position, and with the long screw which was used for the Springfield to set in the receiver, line the guard in position. Having squared the sides of the blank, with a die-maker's square set the blade to the center of the tang on the receiver. With this setting, locate the trigger guard by scribing a line in the center at the rear; then place the guard in position and scribe around it. It will be in the proper location in relation to the rear-tang screw hole, and by holding the front end in position, inletting may be proceeded with. Make wary use of lampblack coating, and try for a hair-line fit, not forgetting the rear slope where the wood must be heavier. When the guard is in about half-way, try to catch the front guard screw; if unsuccessful, mortise a little deeper, or until it is possible to enter the screw into the magazine, pulling the guard up tightly. Remove the screw, action, and barrel, and with the trigger guard in place, drill for the rear guard-screw hole. This hole does not require a bushing as in the Springfield; consequently it should be finished to size of the screw, or slightly larger. I prefer a letter-F drill for this opening, which measures .257 diameter.

It has often been suggested that the under surface of the metal parts be coated heavily with lampblack to locate screw holes. It is, however, one of the most inaccurate methods, for the reason that the oil and lampblack run on the surface of the wood, making it most difficult to locate any given point definitely. The correct way is to use a center screw, which eliminates all guess work. The latter method is used in die work, when it is necessary to locate holes tapped blind in a new die.

After the drilling for the guard screws is completed, set the trigger guard down to the desired depth, using the front and rear screws to pull it in place and to produce the impression made by the lampblack. Once the guard is seated to the proper depth, the surplus wood may be cut away to the desired level. Lay out for the trigger, removing wood so that both trigger and sear work with freedom. Coat the sear with lampblack and relieve all wood where the markings show. Follow instructions on relieving wood from the end of the tang to the comb as given for the Springfield. Then cut out the left side where the magazine plate fastens. Lay the outlines of the cut-out from the inside and then saw this section out. The rear has a straight cut-out, but the front must be done to the end away from the plate with a radius at the top and bottom, in order to assure a satisfactory fit. The top radius in the front is rounded off, allowing its lines to blend with adjoining ones. It is a mistake to cut out squarely in front and at bottom, since the surface is curved in those localities.

Having acquired knowledge and experience in the art of inletting the Krag and Springfield, let us consider another type of stock—that for a shotgun. The construction of a new stock of desired form for the cheaper grades of shotguns often costs more than the original gun. Sufficient experience to carry on an experiment of this nature enables anyone to make an appreciable saving; besides, it will furnish the training eventually to restock creditably an arm of finer quality to which the fitting of a mediocre stock would be sacrilege.

The selection of wood should be in keeping with the grade and ornamentation of the metal parts, and for a high-grade gun the better and consequently more costly types of French walnut are best. Anson and Deeley actions with cross bolts and box locks represent practicality and the standard construction used in all good-grade shotgun actions. The general design has changed but little since it reached the contour we are now familiar with. Minor details have been incorporated, but the general architectural design has remained about the same during the last few decades. As in the stocking operations for rifles, study of the cuts and mortises of the original stock will simplify

many a vexing problem that might otherwise not be solved until too late. Let us imagine that our new stock is for a fine arm, say a William Cashmore with pistol grip, or William Ford.

Begin by removing the sears, top lever, spring, and safety arm from the trigger guard, and stripping the action ready for laying out on the stock blank. The latter is usually purchased roughly cut to approximate size, but it will be necessary to cut off the forward end at that angle coincident with the required drop. To determine this, place the barrels in the action, resting the assembly on a piece of straight board or plate with the top rib down. The blank should be laid parallel and an estimate made of drop at heel and comb. On the back of the action, when it joins the stock, use a bevel protractor to find the correct angle as the action rests in this position. Transfer this angle with a scriber to the forward end of the stock, at a point which will insure proper stock length over all when the latter is fitted to the action. Square top and left side of the stock and also the face of the cut end. If the amount of wood to the right of the scribed center line is not sufficient for the desired cast-off, the center line should at this stage be moved far enough to the left to make possible the inclusion of more wood to the right of it.

The scribed center line, drop at heel, and cast-off are determining points for location of the tang of the butt plate. The center of its tang and width measurement, with length, establishes its position on the butt.

There are two types of action tang, the long slender one and the one that is simply a broadening out of the rear portion of the action. With dividers lay out its form $\frac{1}{32}$ inch under full size, and cut out with a thin narrow flat chisel. Penetrate to a depth of about $\frac{1}{8}$ inch, avoiding encroachment on full width. Bring this marking up to the action and with a $\frac{1}{4}$-inch thin chisel start to remove the wood. Now check with the action in place to get an idea of how well the cuts have been made. With a round gouge relieve the radius at the step, where the narrow portion of the tang begins, and also the face of the cut end.

Before it is possible to fit the action and the tang in place, it will be necessary to cut out for the square locking bar which extends out about $\frac{1}{8}$ inch. Having completed this, the fitting of action and tang may now be done. Place first a light coat of lampblack on the contacting metal and relieve only the heavy spots with fine shavings. When the action barely fits into the wood, attach the barrels and check for drop at comb and heel, allowing enough surplus wood for planing so that the required drop may be obtained when the action is completely inletted. The latter will have been accomplished when the metal is adjusted to the wood both on the face and tang with a hair-line fit. Since the wood was left full at the bottom, it is in order now to remove the surplus to form the pistol grip. Allow $\frac{3}{16}$ inch of wood from the bottom of the action. Many make the mistake of cutting the wood almost flush with the bottom side, not realizing that the bottom plates are yet to be assembled to the action.

With the butt clamp shown in Figure 22 fasten the action in place, and lay out the bottom side for the trigger plate. Stay $\frac{1}{32}$ inch inside the lines, and with a thin narrow chisel bring the depth down about $\frac{1}{8}$ inch; next remove the butt clamp and with a die-maker's square, measure back to trigger housing. With a $\frac{3}{8}$-inch bit, bore in $\frac{1}{8}$ inch; then with a Forstner bit extend the opening a trifle deeper. Lay out for the safety extension and bore out some of the surplus wood, also tool out more so that these will go down in place. With a $\frac{5}{16}$-inch bit bore into the rear safety cut-out and remove the wood down to the bored hole, meanwhile studying the cut-outs on the original stock. When the plate has been let almost the required depth into the wood, place the action in position and check up the rear screw hole. The former will still extend up on the wood, indicating however, just how close it is to the proper depth. Again, clamp the action in place with the butt clamp and apply a light coat of lampblack, starting the plate down into the wood. Cut out until you are able to screw action and trigger guard together. Extreme care must be taken on all cuts, especially at the bottom bearing, where the large front screw holds the trigger plate in place. With calipers determine the distance between top and bottom cut-outs of trigger guard and action tang. Notice that the curve of the trigger plate, at the rear, is rather abrupt and is the commencement of the curve of the pistol grip; also that the cut-out for the safety lever is situated rather close to the rear screw hole. This bearing must be held with exactness or the recoil will be an ever-present factor in loosening the action. There is but a small bearing on the sides for the trigger plate to rest on; therefore, this must also show a full bearing cut-out only for the small screw and spring on the left side, which is part of the single-trigger mechanism.

After having the trigger plate set in at the proper depth, make a pointed screw for the large screw hole at the front end of trigger plate, similar to the one made for the Springfield rear guard screw. Insert it with the butt clamp, still holding the action in place. Next remove the plate, also the

pointed screw, and with a center punch deepen the center mark already made.

Again assemble the plate with the butt clamp still in position, and drill out the rear screw hole, using a drill the exact size of the screw. Place the rear tang tapped hole on the center of the centering device, the same as you did with the Springfield in order to drill the rear guard-screw hole. If a drill press is not available, use the method already described for drilling, which if carefully handled is amply sufficient. In any event, great care must be exercised so that the trigger plate will be the proper distance between the top and bottom of the wood, since the relative position of the hole changes whenever the plate is let in a step deeper. This naturally makes it difficult to pull the action solidly against the stock and leaves an unsightly opening at the bottom when assembled.

After the rear hole is bored, the one for the front screw should be prepared. This is a tapered screw, therefore check its size in a drill gauge. Choose a drill for the smallest size of the taper, which is at the threads; then select another which just fits the hole in the tang, and center the wood with this. Check the drill used for the small end of the screw, and place the stock on the center located by the pointed screw. Sense of touch readily reveals when center and center mark coincide, but to make sure, repeat the trial several times. Drill through and assemble the trigger plate. As this is screwed down, it forms a solid bearing in the wood because of the taper on the screw.

The two screw holes are now completed, and the front screw is in position, so the trigger guard may be set in. The rear screw, on a Cashmore, holds the trigger guard in position as well as the trigger plate, but on nearly all other Anson and Deeley actions, either one or two wood screws, accurately alined, hold this guard in position. Be particular about cuts made with the chisels on the end of the tang, as this is on a sharp angle to the bottom. Have wood and metal come flush, for an opening here is inexcusable. After the guard is in place and the long screw is in at the proper depth, the most difficult part is completed.

Disassemble, and make the necessary other cut-outs in the stock for the safety device and the top-lever spring; then assemble the safety levers on the trigger plate and make the required cuts for these in the bottom, removing just enough wood for all the working parts to clear. Put this to a test by reassembling and screwing together for a trial as to free-working quality. There may still be a few minor cut-outs for tumbler clearance. These are made on the face of the stock to clear the sear, which may require the removal of a slight amount of wood indicated by the lampblack impression. When this assembling and fitting is completed, all parts are removed, washed in gasoline and thoroughly polished before final relationship between stock and action is established.

In the process of this work, a great variety of chisels have been used, including bottoming and several widths of narrow chisels to make the cuts for the safety lever which extends under the tang. Thin wide chisels were utilized for relieving the sides, as well as radius gouges in dealing with curves and angles. As I have explained before, it is best for the beginner to allow his choice of chisels to conform to individual needs, which can be determined only as the work progresses. Intuition, common sense, and personal equation will be guiding helps, and if instructions are carefully and painstakingly followed there is no reason why anyone with the least bit of mechanical ingenuity should not surmount difficulties which at first seemed impossible.

While on the subject of shotguns, I am not forgetting those of domestic make, such as the Parker, Smith, Ithaca, Fox, etc., with the multitude of cheaper arms and the hammer guns made in the interior between 1870 and 1900. All these may be restocked successfully. Altho not great, the demand for hammer guns still exists, and a number of European gunmakers continue their manufacture. It would be impractical to give a full description of inletting all hammer shotguns, but if the reader has working knowledge of the requirements of this subject as it pertains to a representative arm of high grade, he need feel no hesitancy in undertaking the fitting of a stock in any of the lesser grades.

Let us now touch upon the Fox 12-gauge double shotgun, where the cuts for the action on the end of the blank are started a mite differently from the way used for a standard box action, like the Parker. The safety pin of the Parker and Fox are similar, both being drilled on an angle through the wood to meet the safety lever. The method already described relative to placing the safety pin applies equally for properly penetrating the wood when stocking these two types, as do also the instructions for laying out and inletting of action. It is, however, necessary to consider the fact that a Fox 12-gauge action is wider and relatively heavier; consequently choice of wood block is limited to one between 1⅞ and 2 inches in thickness. Saw off the end of blank at the angle giving the required drop, remembering also length from trigger to butt plate, with a generous surplus at the butt. Assuming that the blank is roughly shaped,

place the action against the angle at the forward end and trim down to the start of the comb so that the slope of the tang coincides with the curve of the grip.

This completed, disassemble the top lever mechanism. Observe that the side extension pin which engages the safety is riveted on, and the only part removable is the bottom screw which engages the plunger and spring. In removing this the top lever may be moved at will.

With the old stock for comparison, notice that the center has been excavated for a distance of about ½ inch back. With a 1 1/16-inch wood bit bore this out, keeping the same angle on end. A little over half of the cutting surface of the bit will be engaged, but with the end of the blank held securely between the vise jaws, a very good job may be done. Use a round file to approach the lines made for width. Measure down to the center of the extension pin and lay this off on the left side, and with a ⅜-inch bit bore to the required depth. The center you leave is what you will use to drill through to meet the safety lever.

You are now prepared to proceed with the inletting of the tang. Having disassembled the safety slide, spring, and connecting lever, there will come into view a round button for the lever to work in, and as this cannot be removed, it will be necessary to cut out a clearance for it as you fit in the tang. Follow the regular instructions given as performed on the Cashmore, from this point on, namely fitting in the trigger plate, guard, etc.

The Ithaca, Baker, Winchester, and Lefever are all on the same order, and when one or two complete inletting jobs on shotguns have been mastered, the others will be comparatively simple. It takes time and patience, but when interested in such work, one's mind is so occupied that the time is spent quickly and pleasantly. For myself, no more agreeable occupation exists than to apply my time to this class of work; it is a labor of love.

The following will be a brief description of how to let in a side-lock action for an L. C. Smith or similar double shotgun with side locks. This method is applicable to most side locks, since all except a number of British makes are very much alike. Two additional types of locks are encountered: those of the bar and the back-action variety. Side locks are those which are let into the side of the bar of the action; in others, the whole of the lock is situated behind the action body. The former type is called *bar-action side lock,* and the latter *back-action lock.* In the L. C. Smith the locks are of the bar-action type.

It might be well to consider hammer guns at this stage of our description, for the reason that the locks of all hammer guns are necessarily side locks, and their general design is identical with the hammerless side locks which we are now touching upon. The parts are all situated between an outer lock plate and an inner bridle, and the principles of mainspring swivels, tumbler, and sear are exactly the same as in hammerless side locks. The only notable differences are the shape of the tumbler and the absence of the cocking lever.

Before the locks are let into the stock, it will be necessary to let in the action and trigger plate. Follow the instructions given for the Cashmore, and when inletting the trigger plate into the stock, be careful to imbed the plate completely, in correct position; for when the lock is let in, the arm of the sear must bear upon the wide part of the trigger and not on the outer edge. If it rests upon the outer edge, when pulled to disengage the nose of the sear from the tumbler notch, it produces a twisting action with less rapidity and insufficient strength properly to disengage the sear without considerable effort.

Having removed all parts from the locks, and leaving only the plate to work with, proceed to inlet this into the stock. Remove the wood from the sides of the stock so that it is flush with the sides of the action straight back, preparatory to letting in the lock plates. In doing this, work carefully so that no more wood is removed than is absolutely necessary. See that the lock plates have all the support possible where they engage with the wood, and after they are in position drill out for the sears to meet the triggers. Assemble all parts and coat them with lampblack. Cut out for the tumbler, main spring, sear spring, and bridle. Remove only enough wood so that the parts will just clear, and the pockets thus formed will give support where necessary. Be very careful not to remove any wood where the edges of the lock plates come which would serve to leave open spaces for water, dust, or moisture to enter.

It is advisable to fit only one side at a time. Determine whether or not the sear has a good bearing on the wide part of the trigger by looking through from the opposite side, and then drill for the side-plate bolt, using the centering device as previously described.

The action and trigger plate should be kept screwed together; this gives a better support to the wood, since when the locks are completely inletted, there remains but a flimsy skeleton of wood. Great care must therefore be exercised in the manner in which the stock is placed in the

vise; with gently applied pressure when shaping the butt end.

Here, again, constant reference to the cut-outs in the old stock, if there is one, will be a most welcome help. If this assistance is not available, screw the action together, make a free-hand sketch of the openings, and jot the measurements down on paper. You will find that by doing this, fewer errors will creep in.

Fitting forearms to double or single shotguns is not necessarily a difficult operation. First, strip all the parts from the fore-end iron, such as the plunger housing and plunger roll or catch. This will leave the bare forearm ready to fit into the wood. When a fore-end iron has the automatic ejectors attached, I would not advise the beginner to disassemble these or any parts of a self-ejecting double gun without previous experience or instruction in this departure. The several parts are made to fit so closely, that if they are once out of adjustment it requires a mechanic with the proper experience to restore them to working order; hence it is far better to leave the automatic ejector in place, and fit it into the wood along with the iron.

Select a piece of wood which matches the butt stock, allowing width, length, and thickness for finishing. Plane the top, bottom and sides square, and then scribe a center line the full length on the top and lay out the width of the iron with dividers, allowing $\frac{1}{32}$ inch to finish to on each side. Start the center cut-out and begin letting the iron into the wood. Coat the metal with lampblack and remove the wood only where the heavy bearings show. Having set in the iron to the required depth, begin to form up the wood for the end radius on the iron. Fit this until wood and metal come flush, with a perfect bearing on the radius. The iron should be fitted deep enough into the wood so that there will be a surplus amount of the latter to finish against the bottom rib, when the radii of the barrels are let down into it.

When this has been completed, assemble the barrels to the actions and cut out the contours for the barrels. As you set the iron against the radius on the end of the action, coat the barrels with lampblack to form a bearing the full length of the wood and also in the front, against the under side. Now let in the fore-end lock and scroll-iron tip, if any; then locate screw holes and fasten all parts together in order to see if the fore-end assembles without difficulty. When this is done, begin to form up the outside to the desired design, such as a beaver tail, or any special form that fancy dictates.

To protect the barrels when shaping the outside of the fore-end it is often convenient to make a wooden form to take their place in the channels hollowed out for them. Make special long screws to fasten the fore-end to the form, then remove two of the screws from the fore-end iron and use the former to fasten the fore-end to the form. This saves the trouble of frequent assembling and makes possible a constant understanding of the proposed symmetry that is sought after.

The inletting of shotgun actions requires sometimes a goodly amount of forethought, because of deviation from the accepted standard or normal type. In this sphere is included the Greener and the product of several German makers who entertain the same idea relative to locating the safety on the left side of stock, set in a scroll housing with the safety bolt running through to the opposite side. In restocking an arm of this make, particular pains should be taken to locate this device accurately as well as to fit the housing of the safety into the wood so that no opening will show. A volume could be written on this subject; however, enough of the important details have been set down to enable the beginner to embark on the venture of inletting a shotgun action, and this is my principal object, because I know that after the experience of a first attempt, faithfully carried out, the second cannot fail to reflect credit and be a stimulus to further effort.

The French Lebel and the Russian 7.62 mm. and the 8 mm. Mannlicher are similar. They are of the clip-feed type and the most difficult of all actions to inlet, according to my opinion, because of the long narrow magazine and the fact that the action must be let in first. Remove all parts possible and inlet the barrel, action, and long narrow magazine and trigger, following the general principles already described. The magazine and guard on these rifles are easily thrown out of alinement, because of their shape and the difficulty of following it in mortising. Screw holes are bored in the manner I hope every reader is now familiar with. Figure 50 will give the student an idea of a Steyr action as it appears when completed.

Among the more difficult makes to inlet is the Mannlicher-Schœnauer. Here, also, the barrel and action are first inletted, reversing the order in the Springfield, with magazine, trigger plate, and guard following. This type of rifle has a well-shaped full-length stock which instils the desire in many American riflemen to duplicate it in a Springfield, Mauser, Winchester, or Remington bolt action. Our usual care multiplied several times must be given this inletting. First the receiver

and magazine are inletted, permitting the receiver to stand above the center line 1/16 inch or more and allowing 1/4 inch between the magazine and action. Then screw the barrel into the receiver and gradually inlet it the full length. Be careful not to have a twist in your channel forcing the barrel to one or the other side, and see that barrel and stock come together without the least spring between them. When penetrated to the depth of the receiver, begin to inlet both the barrel and action until they come down to the center line; then finish inletting the magazine and guard, pulling them together with the front and rear guard-screws until all are in their respective places, with the end of the barrel imbedded with enough relief to require only a little effort to spring it out of its channel. When work has progressed to this stage, remove the barrel and relieve the bottom of the channel, as described, along its full length, so that only the end has a bearing.

The inletting of a Mauser receiver and guard is similar to that of the Springfield, and less difficult for the reason that one does not have the cut-off housing or projection to contend with.

The Newton, Ross, Savage bolt action, Model 1917 Enfield, Winchester Model 54, and Remington M-30 have a stamped sheet-metal magazine which is separate from the guard, and for that reason all are rather difficult actions to inlet. The Newton, for instance, which is about the most complicated, has a separate magazine and set triggers in the guard, as well as the false tang or rear receiver fastening. The latter consists of a tang which also serves as the end receiver "hold-down." A screw passes up from the guard holding it and the tang in position. In restocking one of these rifles, I eliminate the long screw which comes through the pistol grip, holding the grip cap and rear of tang in position. The reason for doing this is that the Newton grip is situated some distance back, and when placing one in the usual position it is out of line for the screw hole; therefore the better plan is to drill to the rear of the tang for the substitution of a common long wood screw.

When stocking any of these mechanisms, as we have stated before, it is better to inlet the barrel and receiver first. On the Newton, this order may be reversed, but if there is any hesitancy on account of lack of experience, it will simplify the procedure to inlet the receiver and then the barrel. Remove the front screw which is a part of the floor plate, the floor plate being used to pull up the forward part of the guard. When fitting in the guard, cut out for the set trigger housing with the guard in position and for the separate sheet-metal magazine the rear of which fits at the sides of a projection of the guard. Be very careful to get the mortise the right width and length and at the same time leave a small bearing for the magazine where the floor plate comes, and also for the magazine shell.

The Ross is very similar to the Newton, except that the Newton guard has more metal. The student will find all such actions much more difficult to manage than the Springfield or Mauser, but worst of all is the Savage bolt action. The thin plates of the magazine make a satisfactory fit all the more problematical, and add materially to our difficulties.

Few gunsmiths make a practise of restocking the old muzzle-loading percussion type of rifle, but many inquiries are received regarding such work. The price is usually prohibitive, since it requires special effort, and more time than the job is worth in most cases. However, if the novice should have occasion to make a new stock for such a gun, he will encounter no great obstacles, especially if he has an old stock from which to take suggestions. Every variety of factory arm, including Marlin, Winchester, Remington, Savage, Stevens, is submitted for restocking with some difference presented in each, usually of minor importance. In most of these the rifle is held to the stock by a single screw connecting upper and lower tang, which greatly lessens the task of inletting. The cuts in the wood are easily made, and these types are recommended for experimentation and to obtain the necessary dexterity in the use of tools. Stocks on the last-mentioned arms are turned out by machinery and very few fit the average man. Naturally, in making a standard product it was necessary to make a stock which would answer the general requirements of most buyers. Nearly every enthusiast has at least one in his collection, sometimes a very fine arm, and it is well worth the effort to equip it with a stock which adds worth and efficiency.

In some instances stocks are held to the action by means of a bolt running lengthwise from the rear. An oversized hole is bored starting at the butt end for a distance, abruptly assuming correct diameter of the bolt used to tighten stock to action.

There is only one positive method to drill this hole and that is to do it between centers on a lathe or drill press. Should this operation be attempted by hand with a brace bit and extension drill, it would be wise to have a blank large enough when the drill drifts from center to have a sufficient amount of wood to correct any possible error.

The following is a good method where access

can be had to a lathe or drill press. After selecting the stock blank you wish to use, cut the end on the proper angle for drop, also cut near to the required length. Lay out the center lines accurately at front and rear, and mark the vertical transverse center in butt and front end. Bore the large clearance hole first, then select the proper-sized bit of extra length and chuck this in the lathe; the former should run perfectly true. Measure the correct depth and mark this on the shank of the bit. Begin drilling from the center in the butt end of the stock and place the center of the lathe tail stock in the center which was laid off on the front end; start the lathe at a moderate speed, feeding the stock against the bit until the line marked on the shank for the correct depth is reached. Next remove the bit and use an extension drill. This is made by turning down the shank of a drill, then drilling the end of a piece of drill rod a little under the size of the drill, and sweating these together in an uninterrupted straight line. The drill selected must be of the same diameter as the bolt. Three or more sizes of bolts are used for this purpose: 1/4, 5/16, 3/8 inch, etc. Grind the drill with a long taper for drilling wood with a considerable amount of clearance, and it is ready to chuck in the lathe. Start where the wood bit left off and go through until the drill emerges at the front center mark, making what should be a perfectly alined hole.

On some arms there is an extension from the action which goes into the stock two or sometimes three inches, the bolt being fastened into the end of this as in the M-97 Winchester. If this is the case, drill accordingly by first boring the clearance hole to the proper depth, then drilling the one for the bolt which meets the center of the hole first drilled.

A number of the single-shot rifles have bolts running through the stocks, as for instance the old Ballard. The idea of a bolt through the stock is practical in that it keeps the stock tight against the action. In these types all that is necessary to tighten the action is to remove the butt plate, and with a long screw-driver draw up on the screw until it is prefectly rigid.

For restocking an automatic rifle or shotgun, the same methods may be applied, generally speaking. The position of the recoil spring where it enters the forward end of the stock may be laid out on the side of the blank, carrying the angle down to the butt end of the stock. The centers in butt and front end are in this case not placed the same as described above, the latter being higher, with the one in the butt nearer the toe. In the end of the oversized hole which starts here from the front is a slight angle which corresponds to the end of the recoil spring; it is not of such a degree, however, that it prevents carrying the hole to the butt in a straight line. Proceed with boring operation in a like manner as described for mechanisms requiring bolt to hold actions and stock together. This method eliminates all uncertainty, whereas laying out the course of the hole with a brace and bit is unsatisfactory because accuracy is out of the question. Some makes of rifles and shotguns have part of their mechanism in the stock not always evenly distributed; therefore, for the sake of convenience guide your work from an opposite center. Figure 79 illustrates the inletting of a Remington automatic action. Note the gun brace used.

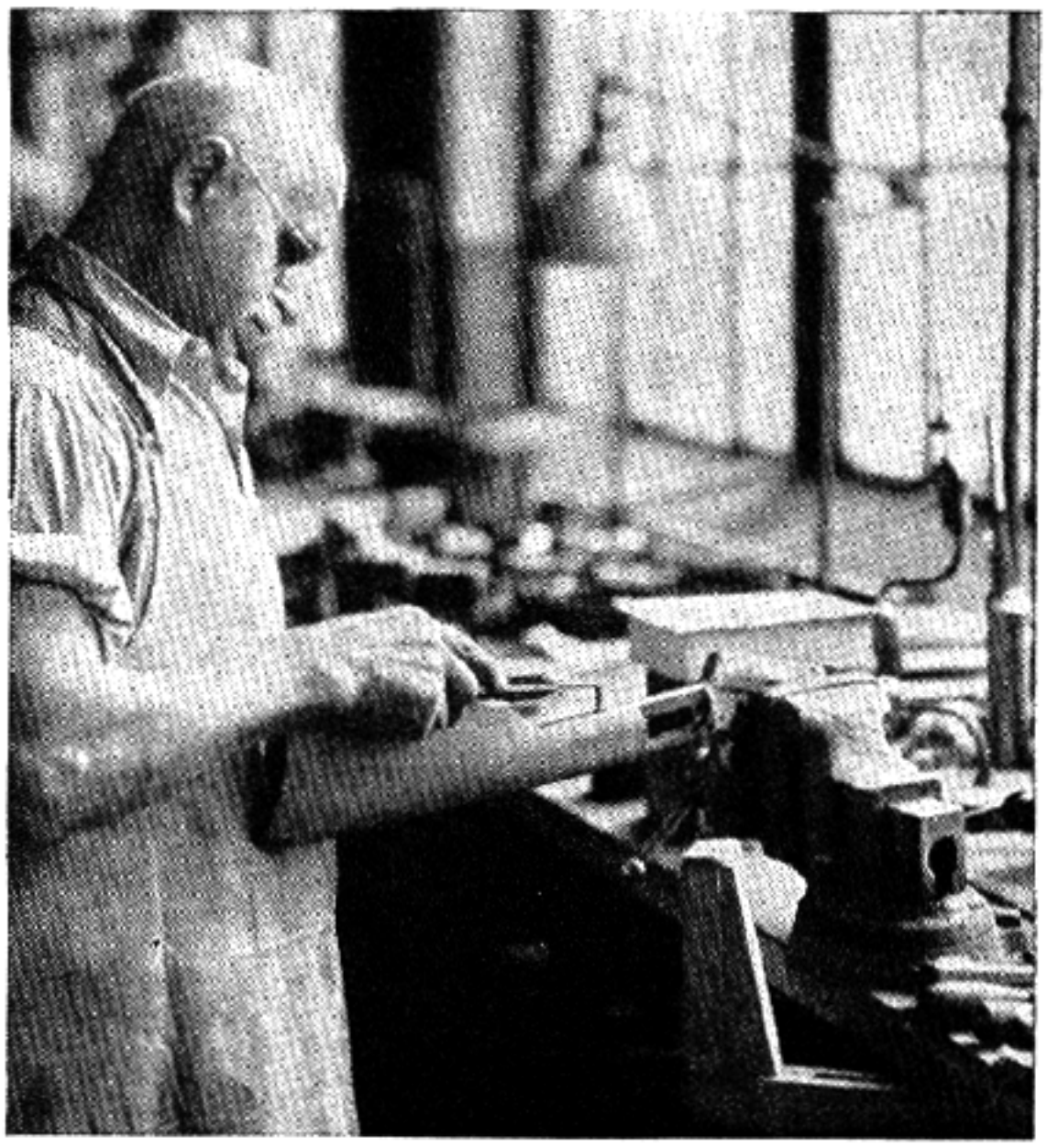

Fig. 79
Bench work. Fitting stock to an action. Note style of gun brace used

The Model 52 Winchester, at this writing, is popular; and since it is of the .22 caliber target variety, calls for restocking are common. The action is not difficult to inlet, as the receiver is cylindrical and the barrel and action are fitted together. Cut out the mortise for the magazine and trigger mechanism, and then fit in the bushing for the magazine release. Spot for the front guard screw, and then inlet the trigger guard, which is only a metal stamping; on this account you cannot expect as good a fit as in the case of a solid guard and magazine.

It has often been suggested that stock bolts be fitted through a specially built stock, and that this method be used on the service Springfield. True, such bolts are needed when soft American walnut is used. The Springfield is such an instance, but if the stock is of a better grade, such as French, Italian, or Circassian walnut, and if the recoil shoulder has been fitted with metal closely against the wood, there is no likelihood of its being split by recoil, providing proper fit has been maintained. While the following has been mentioned before, it is important enough to repeat.

When a receiver is being inletted on a bolt-action rifle, always relieve the radius at the end of the tang. The opening should show at least .020 between the wood and metal at the top. On the bottom relieve at least 1/16 inch. When using the round gouge for this operation, begin a very fine cut at the top, and as it continues down, increase the angle of gouge and remove more of the wood as you go down with the radius. When a mistake is made, such as cutting out too much wood from the recoil shoulder, coat the action with oil in that locality and cut out the wood about 1/8 inch and run in heavy, hot glue; then screw the guard and action together and allow to stand for 24 hours. You have thus formed a solid recoil shoulder which is as perfect as the wood itself and much stronger. When the above suggestions are followed, even in American walnut, the danger of the stock splitting has been anticipated.

When a stock splits it usually does so between the recoil shoulder and magazine opening or between the back of the magazine opening and trigger cut-out, and is due, most often, to the wedge effect of an improperly fitting receiver or guard driven into the space mortised for it. Never attempt to drive an action or guard down to secure bearing marks, for all the force that is required to obtain the lampblack tracing is a gentle tap with a light mallet. If confronted with the misfortune of a split stock, the very best plan is to insert a stock bolt half-way between the recoil shoulder and magazine; also one between the back end of the magazine and trigger cut-out. When stock bolts are used, counterbore deeply enough to make possible the covering of these openings with wood to match. Turn up the latter so the grain will run across the diameter, then cut to a length which can be trimmed off flush when completed. Use hot glue generously and work it well in against the screw head. The direction of the grain, both in the inset and in the stock, should be continuous, giving thereby as little evidence of its presence as possible. If there is a choice in the matter, the operation should be done when the sides of the stock are roughed down to size. Let stand for 24 hours and finish flush with the sides of the stock. A well finished operation can be made to look very well indeed if the screw heads are covered with inlays.

It has been suggested to wet the surface of the wood for the purpose of softening it, and then, with a thin flat chisel, cut a shaving about 1/16 inch thick, 3/4 inch long, allowing the end to adhere to the wood. Then wet still more or steam the shaving, so that it may be turned back; drill and insert a wood screw to hold the break together; bring the shaving over the screw head, glue and clamp it back in place. This remedy may be adapted to certain classes of cabinet or carpenter work, but in gun-stock repair it should not be used even in exceptional cases.

It may be desired, as an added feature of contrast or beauty, to have a buffalo horn, bakelite, ivory, maple or ebony fore-end tip. The material used is a matter of personal preference or expense. Buffalo horn is probably the most practical, however; many like contrasting wood, but in my opinion this is not an attractive addition to a rifle. If buffalo horn is chosen, cut it off to two inches in length and select a piece large enough so that its width will allow finishing squarely on both sides. Drill a 7/16-inch hole, 1 1/4 inches deep, in the center where the finished section will be below the barrels. Turn up a hickory or maple dowel 2 1/2 inches long, so it will enter the drilled hole snugly. Chuck a 1/2-inch piece of cold drawn steel and turn this down just so you can force the buffalo horn on. Allow the piece of steel to stand out from the lathe-chuck at least 2 inches when the buffalo horn is forced into position. With a side tool trim this off to a true face, which is then at right angles with the hole. Now cut off the fore-end squarely to the desired length, first squaring up the sides and top; then bore a 7/16-inch hole below the site of the channel about 2 3/4 inches deep. By means of the dowel adjust the horn tip to fore-end, using blue chalk to spot for perfect approximation.

Cut two pieces of 1/16-inch drill rod one inch in length and point one end. Then drill two 1/16-inch holes in buffalo horn in its upper portion equidistant from the dowel hole and well back; 1/2 inch deep insert the two pins, which should enter the fore-end when in place. Spot with these two pin points and drill holes for them in the forearm. With the roughing or scoring tool shown in Figure 29 rough the face of both the wood and horn. Before gluing the latter into position, take

a three-square file and form a spiral from one end of the dowel to the other. It is now ready to glue in position, after wetting the surface of the wood with water glue made in the manner to be described.

Fill a small can cover half full of boiling water. With the glue brush, drop some of the hot glue into the water, making a thin mixture. Coat the surface of fore-end wood well with this solution, and let it thoroughly soak into the end grain for about ten minutes. At the end of this interval, apply the hot glue to buffalo horn, filling the hole, and drive in the dowel. Now run hot glue into the hole in the fore-end and also on the face of the buffalo horn. Drive into position and clamp, forcing the glue out from face of the horn and wood. Let stand for 24 hours, after which time it is solid enough to fit in the barrel. Figure 80 illustrates tips and suggestions for the student to follow out.

It is almost impossible to use wood chisels on the horn; therefore file out the channel with a 12-inch round file. Coat the barrel with lampblack and continue to remove the high spots until there is perfect contact. The fit should be tight enough to require a slight effort to force it and the fore-end apart.

If you should not have a lathe to face the buffalo horn, you must do this with a fine, broad, flat mill file, testing against an even surface; then drill the horn and bore the hole in the fore-end for the dowel. Fit horn and fore-end until no light can be seen between them. Never use lampblack or oil when fitting horn to wood, as this renders the glue inert.

Invariably imperfections make their appearance and must be corrected before they are too deeply involved. Inspect carefully the entire surface of the blank for any defects, such as "shakes," "dry rot," "knots," etc., which might extend deeper with still larger openings underneath. In certain instances these do not appear externally and show only when the stock is practically completed.

A "shake" is a small or large separation of the wood fibers caused by violent swaying of the tree and by bruising injuries sustained in the process of falling. It appears as a crack or split, almost anywhere on the surface of the stock, and may not be deeper than $\frac{1}{16}$ inch or may run completely through the blank, rendering it useless. The conventional method is to fill such "shakes" with shellac or other material; but this is not to be recommended, for eventually the original crack will still remain, showing through the finish.

Dry rot occurs in woods which have been exposed to dampness or have remained in storage for a long time. It is rarely encountered in imported blanks, but is not at all uncommon in American walnut. Affected in this manner, any stock, be it domestic or foreign, is of no value unless the part involved is of such small size that it can be worked out.

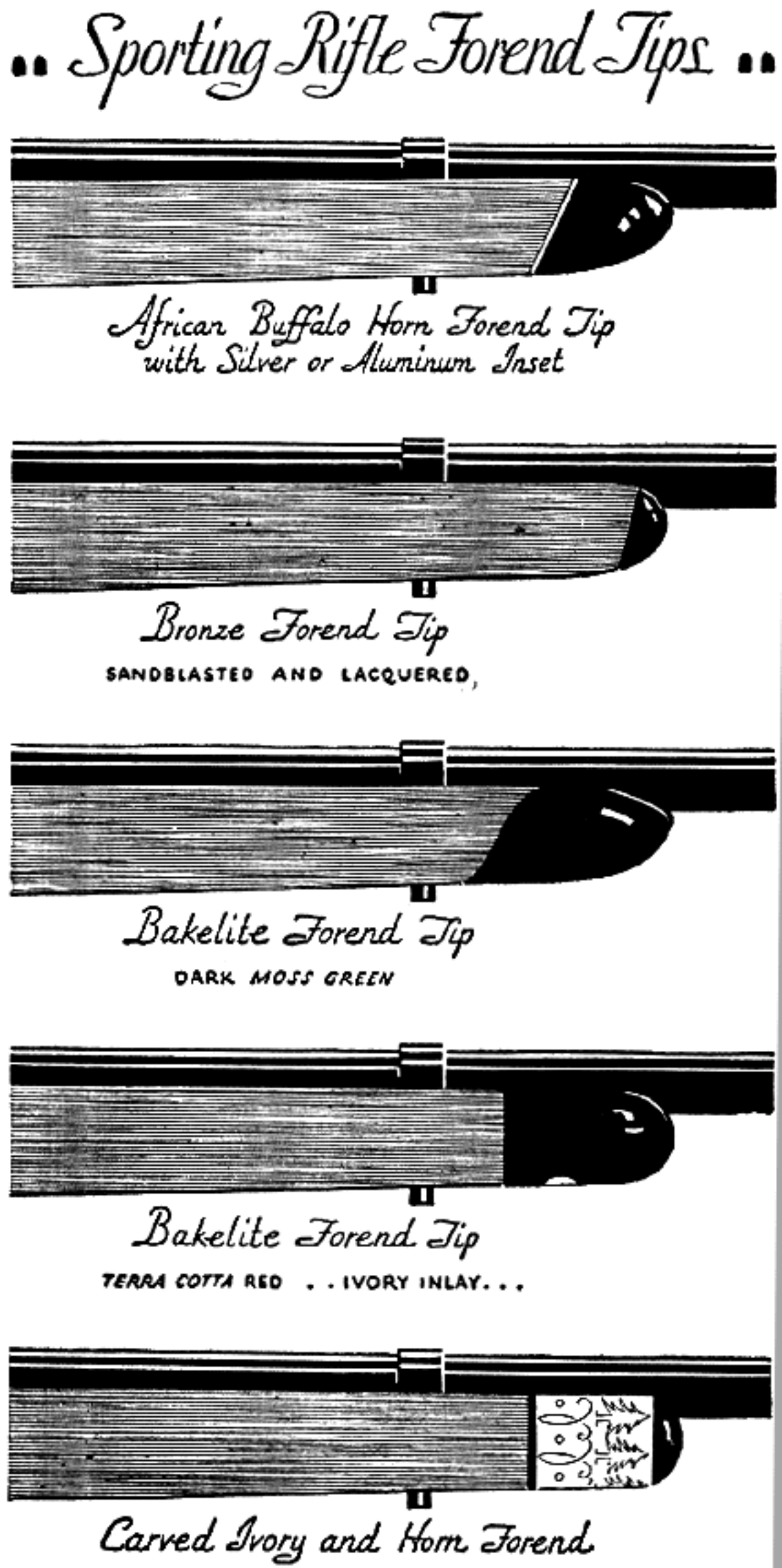

Fig. 80
Suggestions for the application of forearm tips to sporting arms

CHAPTER X

Modeling and Shaping the Stock

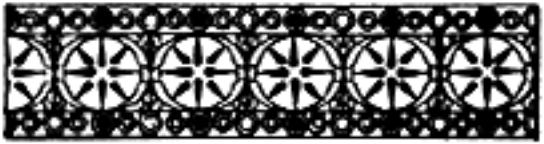

CHAPTER X

Modeling and Shaping the Stock

DURING the work described here, the chapter on design of stocks should be consulted frequently, for the two are closely interwoven. I shall presume that you have formed a mental picture of the ideal design for your stock. If this is done, half the battle is won, for you need only do as your ideas dictate, and you will find that these will in time unconsciously flow from mind to hands.

It is only possible for me to give stock measurements at certain points essential in the shaping of certain sections; for the rest, the human frame of the individual is the greatest figuration. Of the many stocks I have made for various men, no two have been alike. In general, the majority of men can be fitted with ready-made stocks just as well as with ready-to-wear clothes. We must remember, however, that most of these men wear these clothes only because they are less expensive and not because they give to the wearer that well-groomed appearance which creates self-assurance and poise. In the modeling of a stock, 20 per cent is actual measurement and the other 80 per cent is done with the eye.

When all metal parts are fitted into the blank, you will begin the actual measurements on the stock to fit the butt plate and pistol-grip cap. Chapter XIX, Volume II, contains correct measurements for a cap for a Springfield remodeled stock.

Figure 72 will give the reader a better idea of just what the stock should be, and the proper lines to form in the first stages of laying out the blank. First, we shall reduce the comb at *G* so the bolt will just clear. This is an established point, regardless of the drop from line of sights on Springfields, Krags, Mausers, Winchester M-54, etc. Adopt a measurement for the front sight, from center of bore. There are four different measurements: 1.1, 1.05, 0.925, 0.800. The 1.05 height is for the Lyman 48 and Pacific or Western aperture rear sights. The 0.925 height is for the Lyman No. 103 on the cocking piece, 0.15 lower than standard, or for leaf sights; and the 0.800 height is for the lowest possible leaf sights with a low setting of the front sight. The 1.1 height is for special target sights used in long-range work.

Figure 98, Volume II, gives the receiver and barrel gauge in corresponding figures, allowing 0.040 higher, made for the setting of the rear sight at 100 yards. This gauge is inserted in the bolt opening at the rear of receiver, and when in place it is brought up close to the bridge next to the point of the aperture sight, if one were in place. With these two gauges in position, Figure 72 can again be consulted. Place a straight-edge on top of them, long enough to reach from the front gauge over and beyond the butt. Be particular to see that the straight-edge lies along the top of the gauges touching at the muzzle and the top of the rear gauge. The next measurement is at *I* on the heel, which is termed the "drop" at heel or bend. This measures 2¾ to 3½ inches, according to the requirements and build of the shooter. *A* is the length from the center of trigger to outer edge of butt plate. Here we refer to stock design, taking into consideration the anatomy of the person. This measurement may be from 13 to 15½ inches. A short person may require the shortest measurement, while a very tall person might require the longest one. *M* is the distance from the end of receiver tang to the center of radius on the comb, while *F* is the distance from the center of the trigger to the edge of the comb. I never use the latter figure of measurement, for it varies on different rifles. *M* should measure between 2¼ and 2½ inches, which brings the comb into the correct perspective to the other outlines and is at the same time in the required location. *B*, *C*, *D*, and *E* are the lay-out lines for the pistol grip. *B* is the height from edge of pistol grip to the comb, and *E* the distance from center of trigger to edge of pistol grip on *E*, *B*, and *C*. I am giving a maximum and minimum figure, and when laying out these dimensions on your blank, either use maximum or minimum figures. The first line which is laid out is *B*, and this measures between 3¾ and 4 inches. Carry this line forward and measure *E*, which is between 3 and 3½ inches.

These two lines will intersect at the edge of the pistol grip. Then bring measurement *C* down, which is between 2¾ and 3 inches. *D* is a standard length of 1⅞ inches for the pistol-grip cap. Carry this measurement back and have it intersect with *C*. When these lines are laid out you will get the distance *P*, which is the length

to the center of butt plate. Draw a line from *P* at the toe, intersecting lines *D* and *C*. Saw out this section from the edge of pistol grip to *C* and from *P* to the intersecting lines *D* and *C*, and fit the pistol-grip cap. The butt plate is also ready to fit. *J* and *K* are the distances from the center of trigger to the heel and toe—the line which governs the pitch. These two points cannot be measured with any degree of exactness, and the only reliable method is the one expressed in Chapter VIII. At this point remember to take into consideration the butt plate used, together with the build of the person, as described in the chapter on stock design. *H* is the measurement at the ⅔ distance and is a matter of choice with the use of the gun; but if a cheek piece is to be considered, or even if it is to be omitted, it would be well to incorporate this feature when building a new stock, for it is very easy to remove it at the final finishing if it should not be wanted.

The cheek of the user of the rifle comes between *G* and *H*, whether a cheek piece or plain stock is intended; he always touches the stock at this point when bending his head forward to take the line of sight. This part of the stock should command particular attention. *O* is the circumference of the hand-hold or grip. This is measured with a tape and varies between 4⅝ and 5¼ inches. A person must have his hand fitted to the grip where he feels the greatest degree of comfort. As stated before, particular attention must be given to that point regardless of any measurements, so that a gun will feel in perfect balance, or so that when it is brought to the shoulder the hand will have a perfect grip. *L* is the length from trigger to front sling-swivel through the forearm. Naturally this distance varies owing to the length of barrels which were described in stock design.

The next step is to fit the butt plate, after you have obtained the required pitch. Determine the proper cast-off, but first establish a true center line from the center of barrel to the butt stock, terminating at the heel and toe. There are two very reliable methods used to establish these lines. One is to take a ¼-inch piece of drill rod 3 feet long which runs perfectly true. Turn up two brass bushings ½ inch long and of the bore diameter. Sweat one of the bushings on one end of the rod and the other .2 inch from this and insert it into the bore of the barrel from the chamber end, allowing the rod to extend over the heel. Place a parallel over the butt stock at the heel, and with a square, just come up to the rod, first on one side and then on the other. Mark the point of contact on the wood so that there will be ¼ inch space between the marks. These two lines are then divided and the true center is found.

The other method is to attach the sights. If a Lyman No. 48 is used, it must now be fitted into the wood. After the sight is attached to the receiver, place the barrel and action into the blank and mark the position where the wood must be cut out so the sight will be imbedded with a perfect fit on both sides and at the bottom. A fine-tooth hack-saw blade is the best to use to cut the section out, providing you do not have a fine-tooth tennon-saw. Keep away 1/16 inch from the mark made and saw down into the wood about 5/16 inch at the front and rear, and carefully remove the wood with a thin flat chisel. Place the barrel and receiver into position and trim down the sides until the sight base will enter the cut-out. Coat the sides and bottom of sight base with lampblack, and press into position. Remove wood very carefully until you come to the bearing of the receiver into the stock; then remove 1/64 inch more wood at the bottom so that the base will be free and clear of wood. At the rear, also remove 1/32 inch for a clearance so that if the action should ever set back from recoil, there will never be any danger of splitting the wood or loosening the sight.

Sight in the rifle for the desired range, usually 100 yards, using an old stock for this purpose. After the rifle is sighted in, you are ready to lay out the true center lines together with the correct height of drop at heel and the ⅔ distance if the offset is to be used. If you have a surface plate large enough to make the set-up for laying out, well and good. If not, a glass surface plate as suggested, or a true-planed board without any warp will answer the purpose. Lay the rifle on the left side, and with parallels build up to a height that will be convenient to work from, using a surface gauge. First, establish a center on the end of the trigger guard, and with the surface gauge set this to the center of the small aperture. Then check to see if the center established on the trigger guard corresponds. If not, build up on that side until the center in the aperture corresponds with the center made on the guard. Line up the front sight to the center of the aperture, for the center of the front sight must correspond with the center made on the guard. With the rifle in position and the surface gauge set, scribe a line from the center of comb to the heel and from the heel to the toe. These lines will be the true center lines.

When this is completed, check for the correct drop from line of sight. Turn the rifle in a vertical position on parallels, and with the surface gauge again secure the center of the aperture and build up the muzzle until the center is in line with the top of the front sight. Having set the surface

gauge, bring it back to the heel and measure the distance, also at the ⅔ distance, and as a future check, measure the distance at the comb.

After these lines are finished, determine the cast-off you will require and set it either to the right or left. Since you have studied the question of cast-off in design of stock, I shall presume that you have settled on what is needed.

Fitting the Butt Plate — There are four different types of butt plates; namely the rubber recoil pad, the buffalo-horn plate, the trap butt plate, and the steel-shotgun type of butt plate. The question of butt plates, or heel plates, in general is a matter of personal preference, and as they vary so, naturally the discussion is an open one, especially on shotguns. The fitting of butt or heel plates requires an explanation of the four different kinds which I have named.

Rubber Recoil Pads — There are two kinds of rubber recoil pads, which require two distinct ways of fitting. One is held to the stock by two screws. The other has a separate piece of rubber nailed to the butt end and is then cemented with rubber cement. The former is the most commonly used; the latter very seldom, except for a woman or a man who is extremely sensitive to recoil.

There are three different sizes of recoil pads; small, medium, and large. The selection of a recoil pad determines to a degree the weight the rifle will be when finished. The most satisfactory manner to place a recoil pad on a new stock, regardless of whether it is a rifle or shotgun, is to make a templet from 1/16-inch sheet brass, as Figure 68 illustrates. The size should be 1 11/16 x 5¼ inches. The 1 11/16 dimension allows 1/16 inch to finish on the sides or 1/32 inch on each side of the stock. Since there is ⅛ inch at toe and heel of pad there is 1/16 inch for finishing at toe and heel to secure the proper length of plate or stock. The templet should be secured to the butt end of the stock by two brads or tacks and the wood roughed out to the templet. Having done so, fasten the recoil pad in place and finish the additional width and length during the final forming and sanding operations, so that it will come flush and even with the butt stock.

The fitting of a standard recoil pad, which is held by two screws, is quite an easy operation. First, the butt end of the stock is sawed off and finished to a perfect surface, still holding the lines established for cast-off, and allowance having been made for the thickness of recoil pad when the measurement *A* was secured.

The hard rubber face must be trued to a perfect surface; this is done on the face of the sander. If the face is warped very badly, hold the pad on the ends, bringing pressure of the ends against the wheel. The heat generated from the friction of the sander against the hard rubber heats the rubber so that the warp comes back into position. The pressure applied will change the direction of the warp enough so that you will have a perfect true face. Use No. 0 sandpaper or finer on the face of the disc. With a piece of No. 2/0 sandpaper placed on a true surface such as a surface plate, complete the finishing of the face by hand-rubbing it back and forth over the sandpaper.

When the surfacing of stock and face of the recoil pad has been finished, place the pad in position on the end of the stock, and with a scriber mark off the position of the two holes on the center line thus established. Drill holes small enough so that the screw secures a perfect hold in the wood, and insert screws, using soap on the threads so that they will penetrate the wood easily.

The pad is now ready to sand down to shape. At this stage of the operation, it will be necessary to have a fast-running motor grinder, and two discs of hardwood (maple preferred) measuring 9 inches in diameter and 1 inch wide. The hole should be made to the exact size of the motor spindle. The Carborundum Company of America makes various grades of cutting abrasives formed on heavy paper discs which can be shellacked or glued to the face of the wooden disc thus made. If these cannot be procured locally you can take sheets of sandpaper and shellac these to the face of the disc, which will answer the purpose just as well. The grade of paper to use for sanding a rubber recoil pad is No. 1 garnet paper.

Sand the pad down to the edge of the wood in the manner described. Hold the stock in position, and work very carefully, keeping the surface parallel with the face of the disc; move the pad up and down so as not to cut too fast in any one place, for this will generate too much heat. Be very careful when working down the toe. Keep the direct angle of the bottom of the stock. Care must also be taken at the heel so that you do not undercut the wood too much at that point. It requires very steady holding of the stock to avoid cutting digs out of the wood, and also to prevent beveling the edges of the pad. The lines when finished should be continuations of the stock lines at all points.

To secure a fine finish at the last stages of the operation, apply a very light film of shellac to face of butt stock and pad.

The most satisfactory pads for rifles are the Silvers type, or such pads as the Jostam air cushion, Goodyear. or the Noshoc, which has a

brown finish. These pads are solid, without any holes on the sides to collect dirt.

A recoil pad should never be used on a low-power rifle except in rare cases where recoil affects the shooter because of some physical handicap, or for those who are prone to flinch—or to lengthen a stock. My advice to the student who is just starting out is to become hardened to recoil. A well formed shotgun-type butt plate made of steel is the best when it is well checkered. These should not be too deep, as on the Springfield service butt plate, but finely checkered, holding well to the clothing when placed against the shoulder.

Recoil pads are essential on shotguns which are made for trap shooting. They are also a necessity on heavy Magnum rifles, such as the .375, .404, .416, and .505, and on the heavy double rifles which are used mostly in Africa, India, and the Malays. Such rifles are fitted with the Silvers recoil pad, which is of British make. The Jostam air cushion is made on the same order as the Silvers pads, and is about equal in quality. All recoil pads deteriorate in time and become lifeless, especially the sponge-rubber pads. If it should be necessary to fit a sponge-rubber pad to a rifle or shotgun, even greater care must be exercised. First, peel the layer of soft rubber from the pad and tack it to the end of the butt stock. Be very careful not to come too close to the edge of the wood with the tacks. When you have a row of tacks all around the form of the butt stock, fill them in about ⅜ inch apart; then cement the pad to the base which has just been tacked on. Any good rubber cement will answer. The pad is now sanded down by methods similar to those described for the solid rubber pad, but owing to the softness of the pad, you must always have a new piece of sandpaper glued or shellacked to the wooden disc; use only light pressure on the pad when forming it to shape.

Buffalo-Horn Butt Plates — The buffalo-horn butt plates come in three different thicknesses; standard is the proper size; it has the contour which fits the shoulder perfectly, and the face is indented with lines running crosswise. These plates are formed under hydraulic pressure, and when fitted properly the gun will have the finished look of shotguns of the better grade. I would suggest removing the cross lines and using, in place of them, a neat design of checkering on the face.

The standard buffalo-horn heel plate is about ¼ inch thick, the medium plate about ⅜ inch, and the heavy plate about ¾ inch thick. The last two named are only used to extend the length of a stock. The standard is the one generally used and preferred. These plates are usually more or less warped, and the stock must be formed up to the shape of the back of the plate. First, drill the two screw holes and countersink them for the intended screws. Figure 81 illustrates a brace countersink to use. A No. 8, 1¼-inch standard wood screw

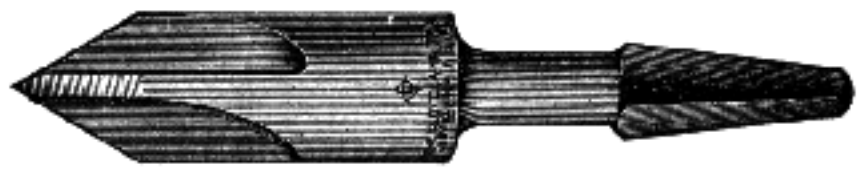

Fig. 81
Brace countersink. This tool is often required in inletting operations. Also to break the interior edges of rifling when a barrel is cut off

may be used. Tighten two larger screws on the countersunk side so that it will be possible to hold the plate while sanding, finish the back on the disc sander. Hold the plate very gently against the revolving disc, starting from the top of the plate and working down. Continue to do this until you have a bearing on the outer edge; then fit it to the butt of the stock. To get a perfect fit in the proper location, place blue chalk on the face of the plate. Work the wood off the high spots shown by the chalk with a flat wood chisel and a 12-inch half-round bastard file. Continue until you have a perfect contact between plate and wood. Then reestablish the center lines, if cast-off has been the requirement, and with a scriber mark the holes. Drill and screw the plate into position. The buffalo-horn plates are made oversize in width and length, and may be reduced at the heel if required; also the length is a matter of choice. After the stock is finished and ready to sand, bore out the butt for lightness and balance of stock, and then glue the plate into position. Let stand for 24 hours and complete the sanding of the stock.

Naturally a plate of this kind will not stand the hard use given to a rifle in the mountains, but for a man who is particular and uses a gun with great care, this horn butt plate makes a nice appearance. It is also very durable and stands shocks well.

Trap Butt Plate — There are four different styles of trap plates, of which the German plate is the best. This has an elongated hinged cover in the center of the plate. The Mannlicher-Schœnauer is also made on the same principle, but with more of a curve. The heel of the plate has a bad projection, its only objectionable feature. The English trap plate has the small round trap which only allows the carrying of jointed cleaning rods. Then we have the Springfield service butt plate with a round trap. This plate is often used in the remodeling of rifles into sporting arms, by cutting off

the tang at the heel, reversing the curve at the toe, and forming the plate into better outlines. It is then necessary to drill a new screw hole at the top above the trap to fasten in to the stock.

Naturally, when making up a new stock, you will want the finest trap butt plate, so you will choose the best, one of the German plates with the face well checkered, as illustrated in Figure 82, Number 2. The first thing is to remove the trap and spring by removing the spring screw. Place the tang center of the plate into position on the center line at the heel or the cast-off. Center should come in the center of screw holes in the plate. Mark the outlines of the tang and cut out for this in the wood, as part of the tang should come just below the surface of the wood at the heel. With a pencil, mark the outlines of the plate, and with a sharp chisel remove the wood at the outer edge, leaving the center high. Coat the under surface of the plate with lampblack and gradually remove the high spots until you have a perfect bearing all around and the edges of the plate set well into the wood. Sometimes you will find it convenient to use a wood rasp to remove some of the wood in the center of the butt. Use a wide, flat chisel which has a very slight curve; you will find this the most useful to obtain the perfect contact of the plate to the wood. Continue to let in the tang as you fit the plate in place, only removing the wood on the side bearings holding the bottom. The wood also must fit well up in the curve at the heel.

Having the plate fitted to the wood in a perfect contact and in position, mark the screw holes, drill for these, and screw the plate on with the slots of the screws in a north and south direction. Remove the plate, assemble the trap and spring, and cut out for the spring and screw. Remove the wood only where necessary so that the trap will open without binding. Lampblack placed on the spring and screw will show any binding points. With this completed, screw back on the stock and with a scriber mark the trap opening on the wood. When this is bored out, the stock is ready to be sanded down. The Mannlicher-Schœnauer butt plate is fitted in the same manner as the one just described, except that you will find with the Mannlicher plate the screw at the heel is set in at a greater angle than on the German type of plate. In the Mannlicher plate, the heel screw will draw the tang down very tightly into the wood. If the regular screws should be missing you can use the ordinary wood screws with the countersunk heads. When fitting such screws as these, have the heads a little larger than the size of the countersink, so it will be possible to round the edge slightly, and also have the slots of the screws in line with each other; which is called in gun work "north and south." This shows better in the finished appearance of a good gun, and at the same time expresses good taste and careful workmanship. If it is desired that the screw heads be finished, information on the operation may be found in Chapter XXII.

After fitting the plate, check for the pitch. One of the most accurate methods for this is to take a piece of $\frac{3}{32}$ x 1 inch cold drawn steel which is perfectly straight and screw it to the long blade of a carpenter's try-square, having it extend out perfectly straight from the blade. To test for the pitch, hold the square in the center of the butt plate and also in the center of the rear aperture. The pitch will be the distance from the end of the long blade to the tip of the front sight. The simplest method is to place the butt of the gun on the floor with the rear sight touching any square upright, like a door frame; the distance from the front sight to the square upright will also indicate the pitch of the butt.

If the pitch is to be straight, it will be necessary to remove the butt plate and cut down the toe of the stock so that the plate will be set in at this point a little deeper until the required pitch is obtained. If less pitch is desired, set the plate in at the heel. During all the stages of fitting the butt plate, the distance from center of trigger to outer edge of plate should be carefully checked to see that the desired stock length is maintained.

Plain Steel Shotgun Type of Butt Plate — The trap butt plate and this type are very similar, except that this does not have a trap. It is also fitted to the stock in the same manner as the trap plate. These plates come checkered and plain; the plain plates are matted, as described in Chapter XXII. These plates may be engraved very artistically and are a credit to any well-made stock.

All butt plates when fitted must be filed flush with the stock on the final finishing operation. Allow the edge of the plate to show with the small angle which is turned in toward the stock. This is a point which many overlook, no doubt because of the smallness of the detail. File all plates, with the exception of the two last named, so that steel and wood are one continuous line. This is done on the final filing operation before sandpaper is used; the later use of the different grades helps to polish the edge, giving a finish to the metal.

I have named four different kinds of butt plates which, in my opinion, should become standard on all rifles. At times the beginner will not be able to secure the plates I have named, so he must make his own plates. This information is given in Chap-

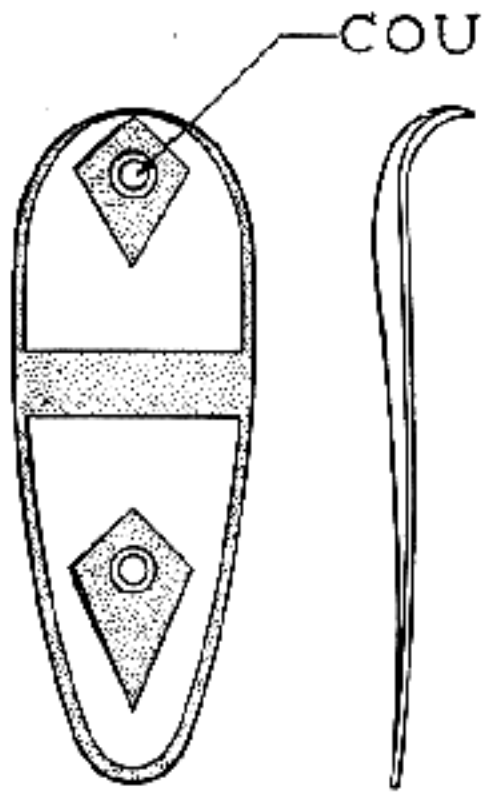

NO 1 BUTT PLATE
PLAIN ENGRAVED STEEL

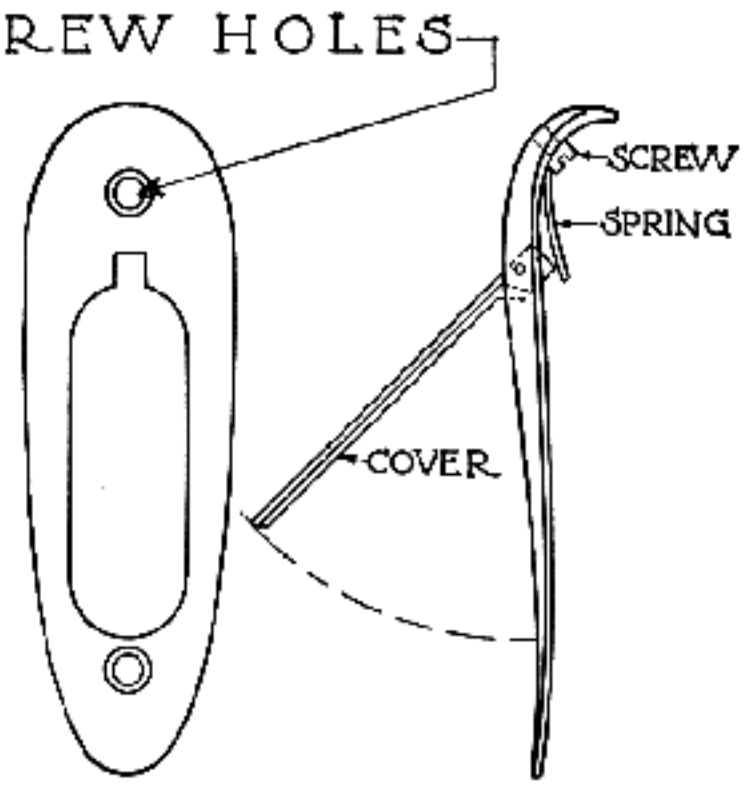

NO 2 TRAP BUTT PLATE
ORNAMENTAL ENGRAVED STEEL

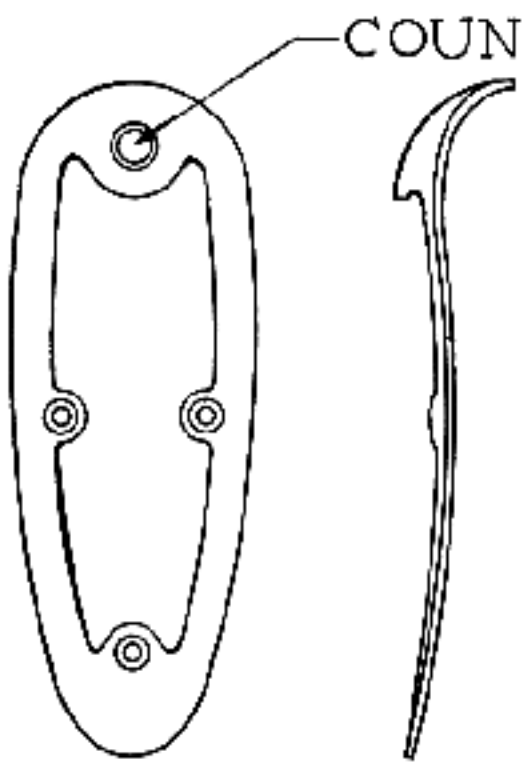

NO 3 SKELETON BUTT PLATE
ORNAMENTAL ENGRAVED STEEL

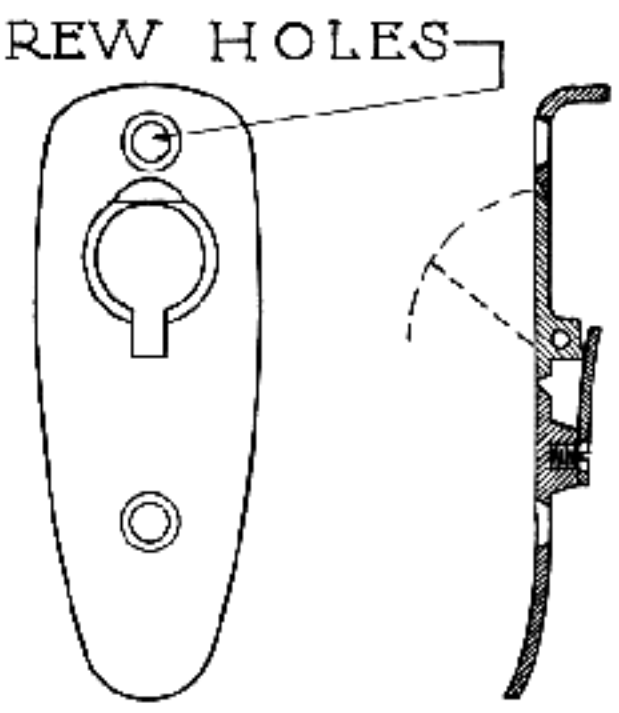

NO 4 SPRINGFIELD BUTT PLATE
RUST PROOF STEEL

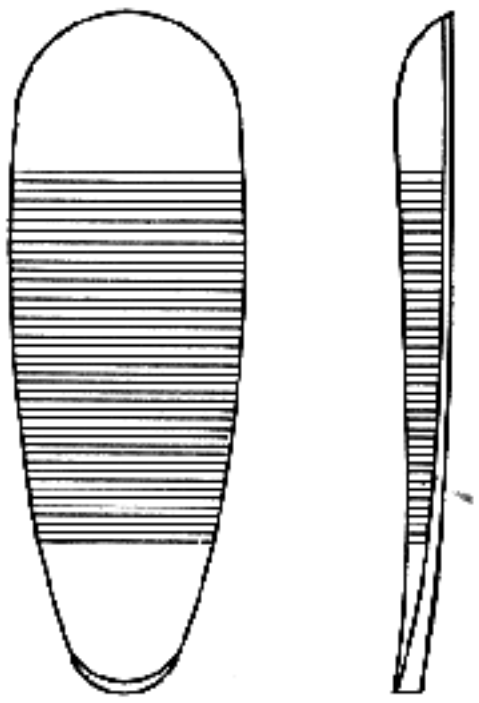

NO 5 RIBBED BUTT PLATE
POLISHED BUFFALO HORN

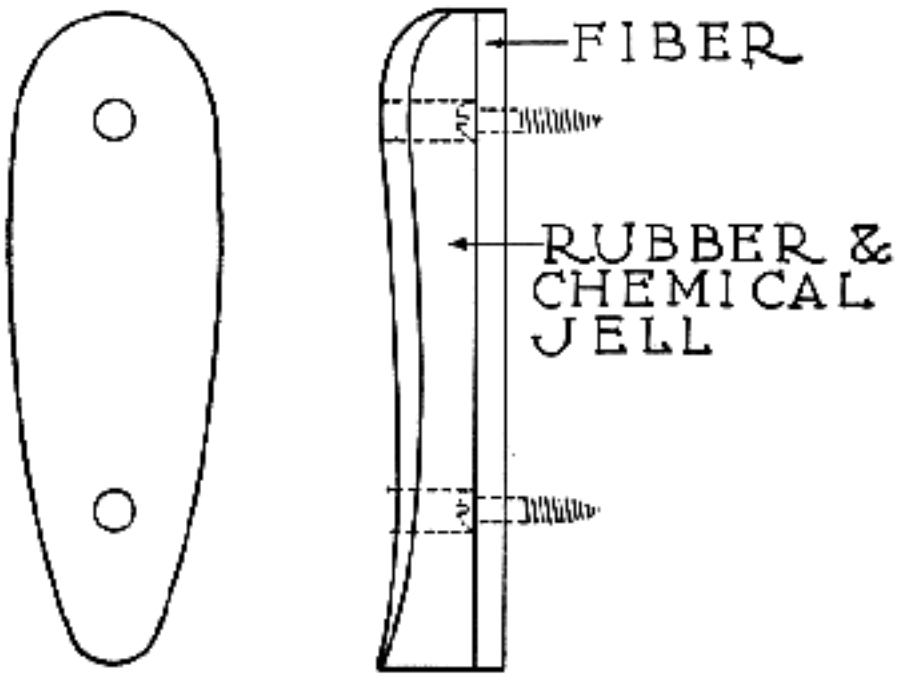

NO 6 NOSHOC RECOIL PAD
FIBER AND RUBBER MOULDED FINISH

Fig. 82
Types of butt plates used on rifles and shotguns

ter XIX, Volume II. Or he may wish to use some material such as fiber, copper, silver, aluminum, or brass. Of course, these are only a matter of personal preference with the beginner, but sooner or later he will realize the advantages of these standard butt plates.

Boring Out the Butt Stock — The boring out of a butt stock should be done after the stock is all shaped up, ready to sand. Sometimes it is desired to bore out the butt for cleaning rods, spare parts, cleaning patches, etc., when a trap butt plate is used. If only for bringing the stock into better balance, the recess must be sealed by gluing a block into the cut-out made, to prevent moisture from penetrating into the holes under the butt plate and causing the stock to swell. The trap plate, when fitted, was scribed to the outlines of trap. Lay this out for three ⅞-inch holes which will just touch each other in the scribed outlines of the trap. Bore these three holes in the stock 3 inches in depth. Hold the stock very firmly between padded jaws in the vise, and bore the holes on a straight line, with the exception of the lower hole which must be on a slight angle or near the angle of the bottom of the stock. Remove the side walls with a thin wide chisel to the 3-inch depth, and with an 11/16-inch or ¾-inch bit, bore to any desired depth on the top hole. The center hole may be bored with a 9/16-inch or ⅝-inch bit on an angle to meet the top hole. The bottom hole may then be bored to the full depth of the bit, or to meet the center hole. This hole is bored on a sharper angle in order to stay away from the bottom angle of the stock. Great care must be used when boring these holes in the butt stock so that they will not come out on the side; do not use too large a bit. Measure the thickness of stock before starting, to see how much wood there is, so you can gauge the size bit to use, and above all, keep the bit in the center, using your eye to keep it in line and also at the right angle.

If you do very many of such operations, you are bound to have the disagreeable experience of having a bit come out on the side. I have had it happen a few times; once on a very expensive Circassian walnut blank, and another time on a cheaper one. You may well imagine how discouraging it is to have this happen after you have taken such pains to bring the stock to its nearly finished condition.

If this misfortune should occur, turn a walnut plug the diameter of the bit, or about .010 inch undersize, and 2 inches long. Glue it in place, setting it firmly in the bottom of the hole, and let it stand for 24 hours. At the point where the bit came out, drill and counterbore and set an inlay in place, either of ebony, buffalo horn or fiber, laying the inlay large enough to cover the broken fiber of the wood. Sometimes a round inlay cannot be used, if a very large section has been broken out. It will then be necessary to make an inlay of an odd form, such as a diamond, oval, square shield, or to follow the natural grain of the wood as described in Chapter XIII. Glue these in place and finish to the surface of the wood. These you may call marks of distinction, which are really marks of carelessness.

Roughing Out — Complete all the work of fitting the butt plate, pistol-grip cap, horn fore-end tip, height of comb and heel at the required drop and the ⅔ distance which is left higher for the final fitting for drop, together with the outlines for the cheek piece. You are now ready to rough out the stock and form it into shape. A considerable part of the roughing-out process may be done with a wheelwright's draw-knife. The usual care must be given to all cuts.

Having assembled the rifle, hold it in the vise in the most convenient position between the felt jaws, with the butt end resting on the gun brace. Figure 29 will give the correct dimensions for the construction of one of these, which should be covered with soft leather. It is made from a 2¼-inch plank of hard wood, the upper edge at a height which will be about 1¼ to 1½ inch less than the height of the vise jaws. It is pivoted with a single ⅜ or ½-inch screw, passing through the bottom side or extension. A hole is bored in the bench, so the brace will extend well over it. A bolt with a wing nut is used, and tightened so that the brace will turn freely. It can be swung around to the back of the bench when not in use, and when needed it may be turned in front and is ready to support a stock or barrel when clamped in the vise. The brace is generally put on the right-hand side of the vise, but you can bore a hole on the left-hand side also when the extension calls for its use on that side, and it will be wise to make two, as this saves a lot of time changing from right to left.

When cutting out stock from the plank, many times pieces of just the right size for these braces will be formed among the cuttings. The shape is of very little importance, as long as they are of the proper height and have the extension long enough to bolt the end to the bench.

It is better to start on the right side of the butt stock to begin the roughing operation, for here you have a straight form to work to. Rough this out, using the draw-knife, plane and spoke-shave. The largest amount of wood will be removed with the

draw-knife. Be careful to cut against the grain of the wood, and use only short strokes in an upward direction, removing short chips from the wood. When cut down to within a reasonable distance of the outlines of the butt plate, bring the plane into use and remove the high spots left by the draw-knife. Finish with the spoke-shave to bring the lines out straight.

Remove the rifle from the vise and clamp it at the butt stock with the magazine up and the barrel resting on the gun brace. With a short butt chisel, remove the heavy wood from the contour of the pistol grip, reversing the chisel so it will not dig in too deep. Be very careful when removing this wood so that you do not open up the grain. From this point to the pistol-grip cap, use a rasp on both sides. The surplus may be removed with a thin flat chisel, using hand pressure to remove the wood; also use the spoke-shave to bring it near to form.

Reclamp the stock sideways at the receiver and guard with the end of the fore-end resting on the wood near the tip. Start shaping the fore-end back to the grip, using the draw-knife, plane and spoke-shave. When a large piece of buffalo horn is used for the forearm tip, use a hack-saw to remove the surplus amount from the sides, keeping away from the barrel at least ⅜ inch or a distance which will finish up to the correct form. Also saw off the bottom on an angle from the front to the back, and leave a measurement of at least 1¼ inches at the point of contact. Then saw off the corners of the square that is made so that the horn can be filed up with the least amount of effort. Figure 71 shows the tip thus formed.

Continue to remove the wood on both sides, and the bottom of forearm, down to the horn tip, and with a 10-inch bastard file form the tip to the required shape. Be careful not to touch the barrel with the file, or the horn with any of the edge tools used to form the sides back to the pistol grip and from the bottom to the guard. Here is where your eye is the best judge in the final shaping to form. The sides of the action must be rounded in effect, from the action to the guard, with all lines blending into each other. The lines begin to take form from the back end of the magazine to the contour of the pistol grip, and also at the top, at the beginning of the tang of the receiver to the comb. All lines continue to blend harmoniously, your eye being the only judge. The technical worker, when he begins to form one of these stocks at this point, will ask why a series of templets could not be designed to give all such measurements. True, they could, but only through great expense; thus we must pass out of the mechanical stages of such operations and train the eye to do the work of templets.

You have probably begun to notice how the stock is shaping to the desired form, but still the wood remains on the left side for the *cheek piece*. Study the different photographs and drawings throughout the books, and with these before you, turn to one of the well designed cheek pieces shown. Picture the same form on your own stock, which is now only a block. Figures 72 and 84 will give the correct ideas to lay this out, together with the correct radius to use. Yet, with all this, you can take a lead pencil and lay these out just as well. I shall presume that you have the cheek piece laid out on your stock, with the receiver and guard clamped between the felt jaws of the vise and left side resting on the gun brace. With a ½-inch flat-butt chisel, cut well around the form into the lines thus made. With a 1-inch flat-butt chisel and a small mallet, cut out the wood from the butt plate to the cheek rest, down along the sides and well along the grip to the comb. After the wood is removed, the form appears rather pronounced. With a wood rasp, you can remove the high points near to the form of the butt plate, and with a ¾-inch gouge, or smaller, begin to form up the outside bead, all around the outlines, staying well away from the bottom ⅛ inch. With a spoke-shave or draw-knife, proceed to remove some of the surplus wood on the cheek piece proper until you see the rest taking the form you have pictured. After fitting it to your face, continue to form the bead with the round gouges. Reduce the wood all around it with a rasp and a bastard file, which are the only tools that can be used on this side of the stock. You will also form up the slope from the Monte Carlo effect to the heel, and carry these lines out very gracefully.

At this stage you are able to determine whether or not the stock has the correct drop at the ⅔ distance by bringing the rifle up to your shoulder and aiming at an object in the manner described in Chapter VIII. If the offset is too high, remove some of the surplus height from the ⅔ distance up to the comb, being careful not to remove any wood at that point. Reshape the cheek piece at the proper form on top and again try the rifle to your shoulder. You may find now that you have the height about right, or you may find that it is still necessary to remove more wood, until you have very little of the original height left at the ⅔ distance. Some require more height than others, and some none whatever. This I can only leave to your best judgment.

Following the roughing-out of the stock, the final shaping is to be done. Actually it does not matter where you begin, for at this stage you must jump from one place to another; harmonious lines are the

object, and a little removed at one point requires the removal of a small amount at another, just as an artist would do when completing a picture. Without any particular point in view, it will be well to work on the pistol grip and comb. The distance of 2¼ to 2½ inches from the end of the tang to the comb is well roughed out, and also the form of the pistol grip to the form of the cap. With the spoke-shave and a half-round bastard file, bring all these lines well into form; also back of the grip cap, leaving the under-line form up a short distance into the grip proper, then ending and blending into the sides and grip. File out the curve of the grip from the end of the guard to the edge of the cap. To complete the form of the lines running into the grip, it will be necessary to remove the guard and with a spoke-shave work down the wood. Start from the magazine opening back to the grip and up to the edge of the trigger guard, before the guard is removed. With a thin flat chisel, remove all wood that projects above the trigger guard as it continues back to the end. With the spoke-shave, trim the wood right up to the tang so it has only a light rounded edge left. The butt stock is clamped between the felt jaws for this operation while the action is being removed from the stock.

With the spoke-shave round up the edge of the stock on the left side of the action, along the top of the barrel opening on both sides up to the fore-end tip. Also file this to blend in with the lines thus made. While the barrel and action are removed, touch up all points that you see and cannot work on while the barrel and action are together. When all is completed, assemble the parts again and continue on some other part of the stock, say, the fore-end and the sides. All the final finishing at these points is done with a spoke-shave and a 10 or 12 inch mill file. Have the sides of the magazine and forward end of the guard come flush with the wood, carrying all these lines well out to the fore-end tip and the sides, which must have a rounded effect from the bridge of receiver to the rear of the magazine opening. These lines are then carried well into the fore-end and pistol grip. Having gone as far as you think best on this part, start on the right side of the stock and finish it up to the grip and a portion of the under side.

At this stage begin the undercuts at the comb, removing the wood so that lines will begin to blend into the grip. Use a round curving chisel to remove the wood at the comb in order to obtain a well rounded effect near the top of the comb. While doing all this work, always retain a pencil center line on the top. If you do not, you are likely to carry the comb too far to the left. The finishing to lines is done with a spoke-shave and a 12-inch mill file. Check often to see that you keep a straight line from the butt plate to the pistol grip, using either a 12-inch scale or a straight-edge. There is always a tendency to leave the center high, so remember that this must be a straight tapered line. The spoke-shave is used to remove the surplus wood, and the file to straighten out the grooves left by the spoke-shave.

Next comes the final shaping of the cheek piece, and the forming of the stock around it. Most of this work should be done with a flat bastard and a mill file, with the round gouges for the radius on the ends. You will notice a square edge from the stock to the radius of the bead, which is a rise of ⅛ inch; then the radius starts from this edge. This part is filed in with a mill file and also a smooth-edged pillar file. After the radius is completed with a neat inward curve with the round gouges, the final finish is obtained with a round file equal to the radius. The square edge blends well into the comb, and the bead forms the undercut at that point, as you continue to the back with the bead and square edge. This curved radius gradually narrows at the top until it finally blends ahead of the ⅔ distance and dies out.

While this is being done, the curve of the cheek is also worked out until a perfect rest is made for the face. When working on the cheek piece, bring it to the face often in the shooting position to see just how it feels. Test for circumference of the grip to see if it fits the hand perfectly, and also the rounding of the comb. All these parts must be in perfect balance for good handling of the rifle.

When shaping the wood flush with the tang of the receiver, use a small bastard file and exercise the greatest of care. File away from the wood on each side, until it just comes flush. Always file in the direction of the action so that there will be no danger of pulling out a splinter of wood. As this is filed, carry the lines well into the comb and grip, using a small half-round bastard file. This type of file is also used to file the undercut of the comb, after the wood has been removed from that point with a round gouge.

I find it difficult to explain the methods of giving the final form to the comb. Study all photographs in this book, and also as many different stocks as may fall into your hands, then work out one you think correct and work as near to it as you can.

At the final shaping you may finish the pistol-grip cap or make a templet as shown in Figure 68, bringing the wood flush with the edges. If you have followed directions when you fitted the cap, you filed the under side to a perfect surface and also the face of the wood. You have the screw in the proper position with the slot facing north and

south. Assuming that all this has been done, you may now glue the cap in position before any further work is done and allow the glue to dry thoroughly. Then finish the cap to the desired shape. Proceed to file the grip down flush with the edges of the wood, holding the correct form. Study it frequently from the sides and top to see that you are holding a symmetrical form, not only to the cap but in the rear of the cap and the bottom side until your final lines blend into the stock proper and disappear into the form of the pistol grip.

In this work you have used quite a few files to obtain a true and even surface. In order to do the best work, the files must be sharp. A dull and worn file causes an uneven surface on the wood, for all wood has hard and soft spots; a dull file will not remove the hard spots but slide over these places and remove the soft spots, causing unevenness and a ridged surface. If there is a good deal of wood to remove with a file, you may use a certain amount of pressure; otherwise, use it very lightly to remove the marks of the spoke-shave or rasp. Always use the file across the grain. It will more or less shed the wood, leaving deep file marks which must be removed.

The work you have completed is now ready to be sanded to obtain the desired finishes. At this stage you may complete the boring of the butt stock to bring the rifle into proper balance; this operation has already been described. If a buffalo-horn butt plate is being used, after boring out the stock, this may be glued in place and allowed to stand for 24 hours. The sanding and finishing are described later and in Chapter XII.

If there are any small imperfections to be doctored up, this operation should be done previous to the sanding or final finishing. At times such things as knot-holes may not present themselves until the stock is nearly completed. The very small centers in the knots may be drilled out, using a drill just large enough to remove the small eye. Turn up a piece of buffalo horn and glue this in, or if you lean toward the eccentric, ivory plugs create an unique appearance. If a knot-hole opens up very large, it may be best to drill out the knot and insert a piece of walnut with the grain running lengthwise. Coat the plug thus made with glue, and drive it into place, letting it stand for at least 24 hours before it is cut down flush with the stock. After all the defects have been repaired or removed, you may continue with the sanding operation.

Not everyone wishes to have a cheek piece or a buffalo-horn fore-end tip, or even a pistol grip. Naturally, taste varies and requirements differ greatly. One may wish the fore-end shaped up with a schnabel; the next may only wish it running up to a point, while others may prefer the plain British style. A cheek piece is required for some men who are thin-faced, but not for full-faced men. Some may only wish the plain flat cheek piece found on the standard European arms, while others wish a particular rest of their own design. Nearly every one requires a pistol grip.

A stock with the cheek piece, buffalo-horn tip, and Monte Carlo effect at the ⅔ distance is one of the most difficult stocks to turn out. The experience the student will gain by working on the hardest form of stock will stand him well for the simple design, such as the plain stock with cheek rest and only a schnabel on the fore-end, which you have experimented with in Chapter VIII, together with the experience acquired with the comb undercuts. Whatever form of stock you have made, it should fit exactly right when it is brought to the shooting position. It would be well to give it a trial on the range before you begin the sanding operation. After trying it in all positions in which you may use the rifle, you may find some minor changes necessary. The comb or cheek piece may not be formed just right. The pistol grip may not have the proper curve. You may also find the fore-end a little too full; it may be reduced. In fact, you will have a number of slight changes to make, for the range test really shows up more than any other form of trial in the shop.

Shotgun Stocks — The forming of a shotgun stock is a very easy matter compared to the inletting of the action. The work on the exterior of the stock is similar to that of a rifle, except that you have a more dainty and slender stock to form up, which must be very graceful when completed.

Place a straight-edge over the rib, which has an opening for the front sight, at the same time allowing it to rest at the rear on the top of the rib. You have used the straight-edge on the rifle over the front sight, and at the center of the rear sight. It is done in the same manner on a shotgun which is over the sighting plain, or over the rib as on the Cashmore, or any other double shotgun. Figure 72 will give you a much better idea of the principal layout lines, while Figure 67 gives dimensions. *C* is the length from the center of front trigger to the center or outer edge of butt plate. This measurement may be between 13½ and 15 inches. *N* is the distance from the end of the stock, fitting against the action. This measurement varies so greatly on the different makes of arms that no length can be given for new measurements; it is only used as a check to make a new stock for the same action. *J* is also a measurement which can-

not be given for the same reason. Still it is a convenient means of checking.

It will be far better to bring the point of the comb into proper perspective to the other lines, and at the same time in the location which will fit the hand comfortably. *H, I, F,* and *G* are the layout lines for the pistol grip. *F* is the distance from trigger to edge of pistol grip. *H* and *I* vary greatly on different forms of actions, so these figures can only be used as an approximate measurement for the average. *A* is controlled by line of sight and drop at comb, while *I* is a figure we can use but should not be governed by; it is about 3 inches or less. *H* may be used as a given maximum or minimum figure, which is between 2¾ and 3 inches. *G* is the length of the pistol-grip cap, which is between ⅞ and 1⅛ inches wide. This is connected to *H*, forming the angle of the pistol grip. Having these lines laid out, you will now secure the distance *K*, which is the butt plate to be used. Then draw a line from *K* at the toe, intersecting lines *H* and *G* providing these lines are laid out to the correct measurements which will come well in line and well in proportion. You may now saw this section out, together with the pistol grip. This is from *G* to *H* and from *K* to *H*. You may now fit the pistol-grip cap. The stock having been cut to length, the butt plate is also ready to fit. *E* and *D* are the distances from the center of front trigger to heel and toe. These measurements govern the pitch. These two lengths cannot be measured, as explained in the Springfield measurements, but are so placed that a dimension can be given when future stocks are made. *L* is the measurement at the top of the ⅔ distance. This is a matter of choice with the student. *A* is the drop at comb, which measures 1⅜ to 1⅝ inches in this day of straight stocks.

In a new stock the ⅔ distance or the top of the Monte Carlo effect is generally left 1¾ to 2 inches in height and removed when not required, after you have tested the gun in the shooting position. You may only have a small indication of this left when you have found that the full height is not desired. *M* is the circumference of the pistol grip. This measurement also varies on shotguns the same as on rifles, and no set rule can be given, for the reason that we have the light and heavy gun, and the only reliable method is to fit your hand around the grip. For a normal hand, the circumference of a grip should be between 4½ and 4¾ inches. This measurement is for a 12-gauge arm. Naturally we have the small bores such as the 20, 28, and 410 gauges, and some of these light guns are rather delicate in the grip. As hands differ, we must construct grips which will fit comfortably and still hold to the racy outlines desired.

The exterior of a shotgun stock is roughed down as on the Springfield, except that you have a daintier stock to work on, which is only held to the action by two small screws without the support that a bolt action would have. Consequently, you must exercise greater care and not put undue pressure on the wood to remove the chips, for you can only hold the small part of the action between the felt jaws in the vise with the butt end resting on the gun braces.

The fitting of the butt plates is the same on a shotgun as on a rifle, so we will assume that you have completed all of this part and carried out the other requirements such as pitch and cast-off. The latter shotgun problem has been an open discussion for a long time on this side of the Atlantic, no doubt because of the fact that all shooters do not know how much this affects shooting for better results. Nearly all factory arms are minus cast-off and the American shooter has become so accustomed to it that he finds it difficult to change. When a stranger comes into my shop, and puts an arm to his shoulder that has all the proper measurements, he invariably asks me what I have done to the gun to make it fit so comfortably. Then I explain all these essential points to him and he rarely is satisfied until he has a gun made to fit his exact measurements.

Roughing — On a straight stock without cheek piece, such as designed for the Cashmore, the wood may be reduced greatly with a plane and a spokeshave, also a small cabinet rasp and 8-inch half-round bastard file. Be careful at this point that you do not allow a file or chisel to hit the metal parts, for this will leave bad scratches or file marks on the action or guard. The comb must be worked in as you shape around the pistol grip. There are no particular tasks from now on, for you are moving from one point to another, using your eye, which is your best guide when the stock begins to take form. The stock is continually taking form until you have reduced the wood flush with the butt plate. On the Cashmore, I have used a buffalo-horn heel plate, and before setting it in place I have reduced it to 1⅝ inches wide and 5⅛ inches long, removing most of the material at the heel to secure this length. I have left the center high, making a very convex surface, and after complete polishing I have placed a very neat checkering design on the face, for buffalo horn takes checkering readily and gives a very artistic touch to the finish of the heel plate.

You have probably had difficulty in forming up the pistol grip, but if you will bring the lines out in the best perspective—by forming the buffalo-horn cap to a complete oval on top, down to within 1/16

inch of the edge, and then letting your lines blend out into the pistol grip proper—you will have solved a part of this problem. Many amateurs make the mistake of placing odd forms on the caps, breaking the lines and not blending in well with the form of the grip. Also they often place a thick flat cap on the grip. By all means try to keep the cap formed to an oval if possible, so that when you place the arm in your gun cabinet the grip cap with a discrepant design will not be staring you in the face. Let the wood run out straight from the sides of the action, so that it will be possible to form the side panels on the finishing operation. Let the comb be well rounded and form the step-off to heel at the ⅔ distance. The finish will only be a matter of reducing the wood to secure the correct drop at this point when the weapon is tried out for height of drop.

The finishing of the stock is done with a spokeshave, a flat bastard file, a mill file, and a small half-round file for the side panels. First secure the correct form of the panel with a round carving chisel. Reduce the ⅔ distance and round the comb so that you can try the gun to your shoulder. Keep reducing this part until you have a drop that comes up with perfect ease and comfort.

Test the gun in the field under actual shooting conditions to see if the results are the same you experienced in the shop when you tested it to your shoulder. The actual shooting will prove to you four points: drop, length, pitch, and cast-off. The last cannot be changed, but the drop, length, and pitch can; do this now. Length may be reduced, but not added to, except with a foreign addition. Pitch may be easily taken care of by reducing the heel or the toe. Drop is only a matter of reducing the distance at the comb and ⅔ point. Another trial in the field should be given to see what difference has been made, and after that is done you will be prepared to make the finishing touches.

It will be best to begin at the side panels. First study a sample stock, and then finish the stock flush with the action so that this will be one continuous line. If you do not feel confidence enough in your artistic ability to lay off the point of the panel with a lead pencil and scale, lay it out on the drafting board, and with shears cut it out to the lines. Lay the paper on the side and mark out with a lead pencil; then reverse the paper and lay the opposite side out. With these lines in the correct position, take the small carving chisel and form the radius. If you should wish the small continuation of the design which is placed in the back of the large panel at the point, carve this out, keeping the bottom edges sharp. I always place a radius around the edge of the panel at the point, instead of the small design, for when you carry out the radius to a sharp point, it will leave a slight rise back from the point and will die out in the grip. You may then have well blended lines, but when you place the very small panel back of the point, this will break them most unattractively. Most British shotguns have had this added panel for a long time. Of course, many like such additions, but there are a thousand and one ideals of beauty. Continue to finish the pistol grip, and have all the wood come flush with tang of action, trigger plate, and guard. Give the comb the final finish and then complete the sides, comb to heel and underside lines. Most of this work is done with the mill file. Have the wood and heel plate come flush. When all is completed, remove the butt plate and bore for the correct balance, which can only be determined by "feel." Glue the butt plate on and let stand for 24 hours. The stock is then ready to sand, which will be explained later in this chapter.

Having completed a rifle and shotgun stock, you may apply similar methods to all other stocks. Some double guns have the side plates. These are finished in the same manner; there is only a little difference in the forming of the wood around the plates. A straight hand stock is far easier to make than the pistol-grip stock. It really makes little difference to the beginner when he has the general principles of the exterior forming or modeling of a stock whether it is a two-piece stock or a rifle. The general principles are the same. You may require a slightly different design or you may wish an odd design. This is entirely up to you, and I will let you work out your own problems, for if I went on and placed before you the many odd ideas which I have incorporated in stocks to suit individual requirements, this chapter would be out of all proportion to the rest of the work. You are well prepared to form a mental picture of just what you wish and to carry it out to your own expression.

To place the final finish on the surface of the wood, you must go over it with sandpaper. Use No. 1 garnet paper for the roughing, and for the final finishing use No. 7/0, which is the finest sandpaper made. With a wet cloth, thoroughly wet the entire exterior surface of the stock, causing the grain of the wood to rise and the surface of the wood to appear very splintery. Allow the stock to dry naturally. With No. 3/0 steel wool, remove the upraised splinters, and then use No. 1 garnet paper. The steel wool is used first to cut the splinters off the wood, for sandpaper has a tendency to imbed them back into the wood instead of cutting them off.

Before sanding operations are started, cut a broom handle off to between 8 and 10 inches, and

form 6 inches of one end to fit into the barrel channel of the fore-end. The end is then drilled for wood screws 4 inches apart and screwed into the fore-end, the short end extending out as a center. I shall assume that you have the checkering frame made. From now on this will be a valuable addition to your stock work, not only for checkering but for hand polishing as well. With the stock centered in the frame, all the wetting and sanding may be done without any danger of knocking the stock against any metal objects.

After each wetting, the steel wool is used first, then the sandpaper. After the first wetting, No. 1 garnet paper; second wetting is then followed by No. 0 sandpaper. Then No. 2/0 follows, and so on until you have reached the No. 7/0 paper, which is used for the final finish. The wetting and sanding is repeated until there is no further chance of the grain of the wood rising and the surface of the wood is perfectly smooth and free from any marks whatever. This operation is often termed "whiskering."

At this stage, the sling-swivel bows may be fitted into the butt stock and fore-end, and also the silver or gold ovals or shields may be inlayed, if inlays of any kind are desired. After these are glued into place, they are filed flush with the wood and the file-marks are removed with fine No. 7/0 sandpaper.

A very convenient sandpaper holder is a piece of cork measuring 1½ x 2 x 3½ inches. Cut your sandpaper so that it will just come up over the 1½-inch height. Smaller pieces of cork may be used to advantage, as well as the larger pieces to get into odd forms. You can also form pieces of the cork to take various radii. There is just enough "give" in cork to produce the proper sanding on a stock.

In sanding forearms, such as on single-shot rifles and fore-ends on shotguns, the best results are obtained by making holders to go between the centers on the checkering frame, holding the fore-ends fastened to these centers. With the work thus supported, you can turn the piece in the direction most convenient to work to. Doing such work as this in a vise is one of the most unhandy methods, for you do not have the support at the end, and for that reason you are unable to use any pressure on the sandpaper.

When sanding a stock—or for that matter any piece of wood—always sand in the direction of the grain of the wood. When sanding a fine piece of wood across the grain, even with the finest sandpaper, you will notice that it leaves marks; it is very much more difficult to remove these with the rottenstone when polishing.

The working of curly or bird's-eye maple requires a method of finishing very different from that used on any of the walnut woods. When making a stock of curly maple or even bird's-eye, the exterior is roughed out with a sander made as Figure 83 illustrates. Fasten these to the spindle of the

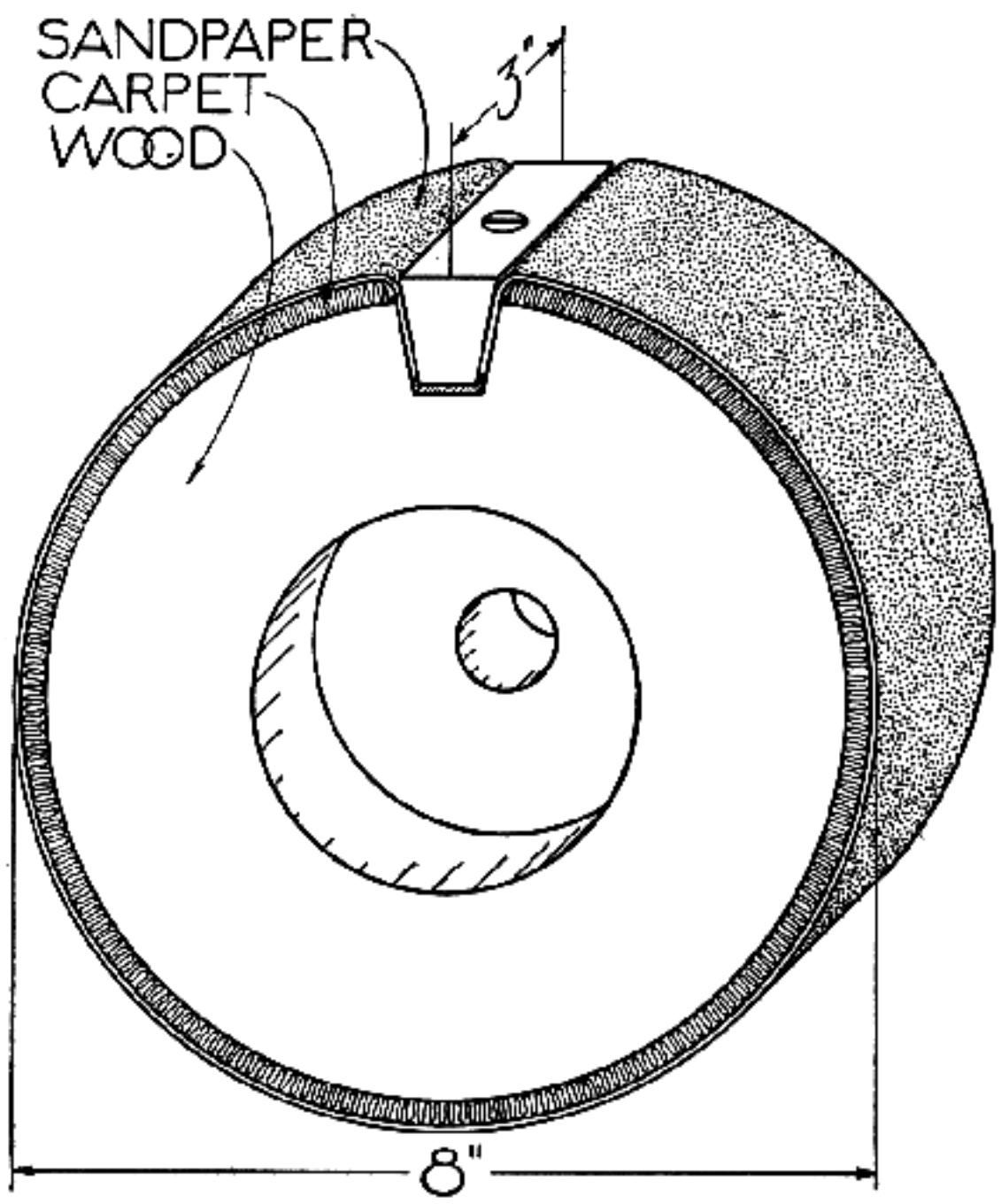

Fig. 83
Sanding drum for use on bench grinder

grinder. Turn the drums out of any good hardwood which does not have any checks, or glue ½-inch pieces together, crossing the grain on each piece as it is glued to the next, for strength. When this is completed, cut out a small section lengthwise with a wedge effect and make a wooden wedge to fit into this groove, allowing enough on the sides for the sandpaper. At the same time the wedge will be below the outside surface when it is pulled down tight. Wood screws may be used to hold the wedge in place.

When this is done, cover the face of the wood with carpet which has a good heavy nap, and tack the carpet to the face of the drum with the nap standing out. The edge of the carpet should come flush with the cut-out for the wedge. You may procure sandpaper for the drums from any of the large supply houses in any grade and width. Cut the length which will encircle the drum and allow enough for clamping the ends. Come down into the bottom of the cut-out, and place the wedge in position. Screw it in place, and as you pull the wedge down it will tighten the sandpaper. The small

opening left when the wedge is in place can never be noticed when the sanding is being done.

A sanding drum made in this manner will eliminate a lot of hand work, especially on the finishing of maple. Nearly all the roughing can be done with a heavy rasp, and the final roughing can be done on the sanding drum, except around the odd forms, such as the pistol grip and comb; but where a straight side can be worked, the sander will do a better job. Such a drum made for the grinder may be used for a number of wood operations, and when once used, you will be surprized to know what a large amount of work this will be called upon to do. The nap on the carpet gives the sandpaper the amount of elasticity required and at the same time has a very fast-cutting effect.

Many beginners often wonder how the round forearms are made, such as you find on the Winchester and Remington pump guns and automatics. At the factory they are bored out from a solid piece of wood on a special machine with a tool to remove the center without the least effort. However, you will have to bore this out on a lathe. This operation will also apply to fore-ends on tubular magazine rifles as well, except that the fore-end is formed instead of being turned after boring. First, square up the piece of wood that is to be used, and then remove the four corners with a plane, making the blank octagon. Shape when cutting the piece to length. Allow ¼ inch for finishing the ends. Chuck the blank in the lathe to run true, and use a ½ to ¾-inch drill to get a hole started. If you have a Forstner bit near the desired size of the finished hole, this will be much better than a drill. A regular auger bit cannot be used successfully, for it has a tendency to split the wood even tho you have left your blank large enough. After you first drill a hole, you can enlarge it by using a drill of larger size, so that the boring bar can pass through the hole first made.

After the center hole is enlarged, the following operation is to bore it out, using a boring bar with a square or round tool fastened in the end, the bar held in the tool post or a regular boring bar holder such as the Armstrong. As you have a long distance to bore out, do not remove too great an amount of wood on each cut. The tool used must be ground with a long cutting lip and stoned to a keen cutting edge so that it will not tear the wood. Bore the hole to the desired size and face the end before removing from the chuck. On the Winchester pump guns, such as the Model 12, the ends are turned to a form so the nuts can hold the wood to the center without splitting.

Remove the fore-end from the chuck and chuck another piece of wood. Turn this so the fore-end can just be driven on with light taps. The end which is turned is driven on the arbor thus made, and the outside turned to any desired size or form. Very light cuts must be taken with a tool ground to a long cutting lip so that it will shave the wood instead of tearing. When it is completely turned, remove the fore-end from the chuck, and after removing from the mandrel, save it for the next job. After the locking nuts are in place, together with the pins or the tube, the barrel channel is cut out just so there is a free, even movement of the fore-end back and forth on the magazine. On the regular Winchester fore-ends, such as you have made, you will notice a considerable amount of end-play or more of a sloppy, twisting motion as the action is worked. This can be eliminated in the new fore-end by making a perfect fit in the channel to conform with the barrel. When all this is completed, turn another piece of wood which will just fit the tube so it can be used on the centers of the checkering frame for the sanding and checkering operations.

The styles of fore-end which have just been described are rather difficult for the beginner to make without a lathe. Some of the small fore-ends he may be able to make by boring out first and then shaping suitable wooden holders to perform the other operations, but for the larger ones he must have the proper equipment. Beaver-tail fore-ends or any special style of forearms, such as on single-barrel trap guns where the wood fits well up along the sides of the barrel, or on single-shot rifles which require special forearms, must be shaped on special wooden forms that can be clamped in the vise and worked upon without any danger of chipping the edges if clamped directly in the vise.

CHAPTER XI

Bedding Barrels and Actions

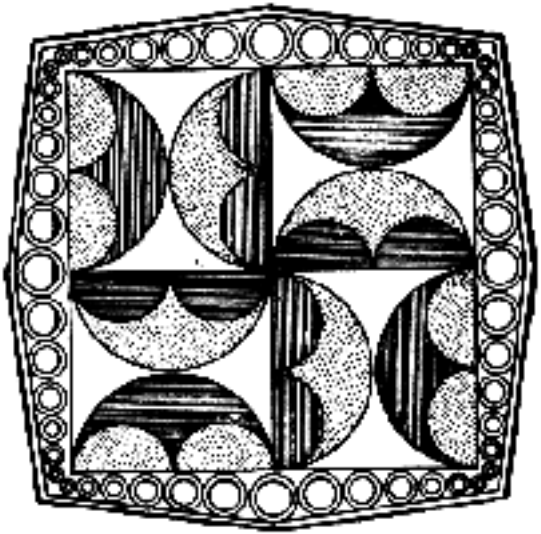

CHAPTER XI

Bedding Barrels and Actions

THE undertaking of inletting a barrel and action into a blank by the beginner the first time usually results in one or two bad mistakes. One of these is to inlet the rear of the receiver into the blank too deep or not deep enough; the former is the most common, and when it happens the forearm stands away from the barrel often as much as a half-inch. Naturally the owner of such an arm is at a loss to know why his rifle will not shoot, especially when he has pulled the forearm up to the barrel with an encircling band. The amateur should have a clear impression in his mind of what he is about to do when he attempts the imbedding of an action and barrel into a blank of wood. I have touched upon this question in Chapter X, but on all important subjects we must be warned of certain dangers the second time, and this subject is one that every beginner should learn by heart.

Colonel Whelen's long term of duty at the U. S. Springfield Armory as an officer in charge of the experimental division enabled him to study a great many problems, and every one should benefit by his extensive tests and findings on the subject of bedding rifle barrels and actions. Figure 84 illustrates his standard design of rifle stock, showing the cheek piece. This can often be referred to when laying out a stock; many express their desire for this design.

Since Chapter IX and this are related, it will be well for the reader to study the question from both angles and arrive at a clear understanding of the principles involved. The following was written by Colonel Whelen while he was studying the problem at the U. S. Springfield Armory:

"The bedding of the metal portions of the rifle, that is, the barrel, receiver, and guard, in its stock has a very important relationship to accuracy and to the maintenance of zero. To shoot really well, a rifle must be very stiff from butt to muzzle. No really good accuracy has, as a rule, been obtained from a *light* rifle having a two-piece stock—that is, a stock and forearm in distinct pieces and separated by a metal receiver, particularly when the butt stock is secured to the receiver by tangs and screws. Sometimes fairly good accuracy has been obtained where the stock of a light rifle is secured to the receiver by a long bolt passing through the stock to the butt and the screw set up very tightly (Sharp's and Ballard rifles, for example), because this is a very much stiffer method of attachment than the usual tangs and screws.

"If we search the records prior to about 1900, we find that really good accuracy had been ob-

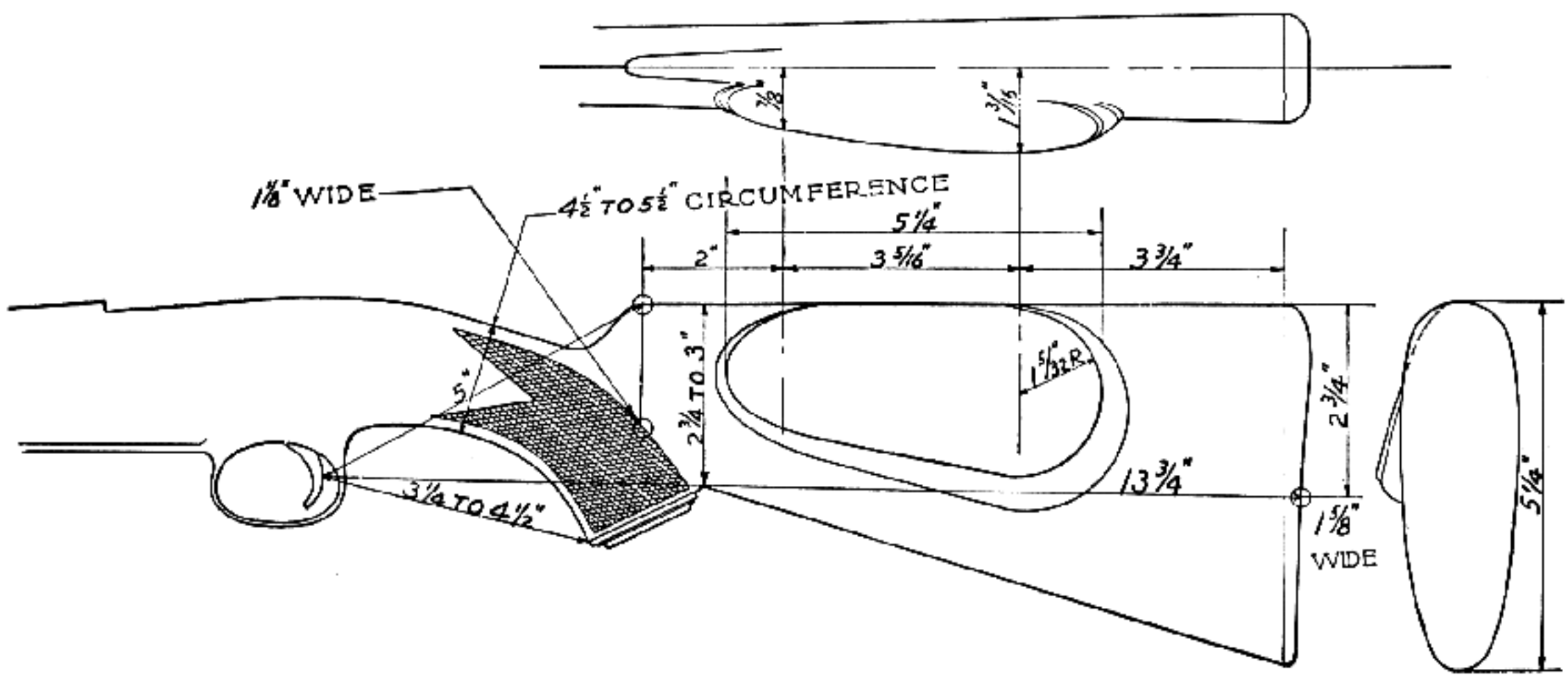

Fig. 84
Whelen design of cheek-piece and stock measurements

tained only from single-shot rifles having very heavy barrels. The heavier a barrel the more accurate it always is, other things being equal, and these stiff heavy barrels did much to make up for the poor design of the stock attachment. But it was very seldom indeed that really gilt edge accuracy was obtained even with these heavy-barreled rifles, and they can hardly be termed *light* rifles. By a light rifle, we mean one weighing 9 pounds or less.

"With light rifles, really gilt-edge accuracy has only been obtained with one-piece stocks, or more correctly speaking, with modern bolt-action rifles which have been properly bedded in their stocks in accordance with certain principles. Even the most perfectly made bolt-action barrel and breach action *will not shoot with good accuracy unless it be properly bedded in its stock.* By proper manufacture, gauging, and inspection, it is possible to make barrels and breech actions by quantity production so that they will practically always shoot with splendid accuracy when bedded right. But because of the nature of wood, it is not possible to construct a stock by quantity production to such accurate measurements that it will invariably bed right when assembled to the metal portions by ordinary screwing together. There is an art of bedding, and where the finest accuracy is desired, this must be done by hand by a workman who thoroughly understands the operation. Even so, fine accuracy is not assured unless it is proved by targeting the weapon.

"The fact that bedding had a decided effect on accuracy was first discovered in America by a small group of workmen at Springfield Armory about 1880. These workmen at that time were members of rifle teams shooting the old .45-70 Springfield rifle (which had a one-piece stock). It is believed that no official record was made at that time of the influence of bedding on accuracy. However, Mr. Freeman Bull talked of the matter to the then young employees of Springfield Armory before his retirement. About 1909, Springfield Armory began to manufacture rifles of selected and special accuracy for use at the national matches, and in an effort to secure better accuracy from those rifles, the employees, remembering what Mr. Bull had told them, began to experiment with bedding; in three or four years they evolved a method which practically always resulted in splendid accuracy. From Springfield Armory this knowledge gradually spread to other manufacturers. The Winchester Repeating Arms Company first began to apply it to their Model 52 rifles a few years after that famous model was placed on the market, and as evidence of results one has only to examine the records made by that rifle in recent years. Lately, they have applied the same methods to the assembly of their Models 54 and 57 rifles. Certain of the custom rifle makers, notably Howe, Niedner, and Owen, learned this method around 1920 from their associations with officers and men in the Ordnance Department of the Army, and more recently all rifle manufacturers and gunsmiths actively interested in improving the accuracy of their rifles have become acquainted with it.

"In England, the effect of bedding on accuracy was discovered in attempts to make the Lee Enfield rifle shoot with greater accuracy. That rifle with its two-piece stock and its very light barrel is particularly sensitive to bedding, and when one searches literature on the subject of the accuracy of the Lee Enfield rifle, he finds whole volumes of instructions and suggestions about bedding. In Germany, bedding has been thoroughly learned by Mr. H. Gerlich, the maker of the Halger rifle, and as a result, that rifle has attained an enviable record for accuracy in Germany. Mention should also be made of the Swiss Martini free rifle used in international matches. This rifle has a two-piece stock, and its accuracy is due to an extremely heavy barrel plus a stock secured to the receiver by a heavy bolt passing completely through the stock and set up very tightly.

"At the present time at Springfield Armory, all the metal portions of the rifle are made to extremely close tolerances and are most rigidly gauged and inspected, so that fine accuracy is practically assured. After the rifles are assembled, they are sent to the range for targeting from machine rests before final acceptance. The .30-caliber rifles are capable of grouping their shots in about a 2½ to 3-inch circle at 200 meters (217 yards), and the .22-caliber rifles in the 10-ring of the small-bore target at 50 and 100 yards. If they do not group this well, they are returned to the manufacturing department for correction, and 49 out of 50 times it is found that the trouble is in the bedding. This having been corrected, the rifle invariably targets up to standard. It is a common occurrence to have a rifle target a 6 to 10-inch group at 200 meters, and upon being rebedded in its stock, to target a 2 to 2½-inch group.

"The following is the method used by Springfield Armory in bedding the metal portions of Model 1903 rifles in their stocks to obtain the highest degree of accuracy, and maintenance of zero.

"The rear guard-screw bushing is regarded as essential. Great care is taken to insert it very

tightly in its hole in the stock, and to perfectly aline it so that the rifle and receiver will not be canted to either side. The bushing and the guard screw must both be tight and firm in the stock.

"The wood surrounding the rear tang of the receiver and the rear tang of the guard must be a very tight fit on these parts, except that the wood in rear of the rear radius of the receiver tang should be relieved slightly to avoid tendency of the stock to split longitudinally in the small of the grip. The rear guard-screw should be screwed up very tightly, and should bind the receiver and guard absolutely at this part. If this screw becomes loose the rifle will at once begin to shoot very poorly.

"The rear surface of the recoil shoulder on the lower front portion of the receiver must bear solidly, tightly, and evenly against its rear vertical contact with the stock.

"The flat under-surface of the receiver in rear of the recoil shoulder should bear evenly and level on its seat on the stock. It is very essential that this seat be cut perfectly level in the walnut so that when the front guard screw is tightened it will hold barrel and receiver evenly with no tendency to cant to one side or the other. It helps out the rear guard-screw and bushing in this respect. If there is any strain which tends to cant the rifle to one side or the other the zero will vary continually.

"Moreover, when the stock is fitted to the barrel and receiver, before the guard-screws have been tightened, there should be a slight tolerance between the flat under-surface of the receiver in rear of the recoil shoulder and its flat seat on the stock. The two should not meet by say $\frac{1}{32}$ inch. Then when the guard-screws are tightened up, the front guard-screw should pull the stock up to meet the receiver, and in doing so should in addition press the tip of the forearm or fore-end tight against the bottom of the barrel.

"In the case of the full-stocked forearm of the military-type rifle, the forearm touches the barrel only at its tip. The forearm should press upward against the bottom of the barrel at the upper band with a pressure of about five pounds. The upper band is assembled so that it does not touch the top half of the barrel. When the rifle has been completely assembled, the muzzle portion of the barrel should bear down on the tip of the stock, and there should be about $\frac{1}{32}$ inch clearance between the upper band and the top half of the barrel. In pressing up on the barrel of the rifle and down on the upper band, it should take about five pounds' pressure to cause the upper half of the barrel to touch the inside upper half of the upper band.

"In the case of rifles stocked with the Model 1923 pistol-grip stock with short forearm, the barrel should be accurately bedded for the entire length of the forearm, but the tip of the forearm should press upward against the bottom of the barrel a trifle harder than the remainder. That is, when the front screw is tightened the tip of the forearm should press up against the bottom of the barrel with about five pounds' pressure. Then the lower band should be fitted so as to bind the forearm quite tightly to the barrel. If a barrel band encircling the entire barrel is used, the band itself should not fit so tightly as to preclude the barrel elongating without buckling when warm from firing.

"The owner of the rifle should be informed that it is necessary to keep the two guard-screws screwed up very tight at all times. This caution applies to every type of rifle."

CHAPTER XII

Giving the Stock Its Final Finish

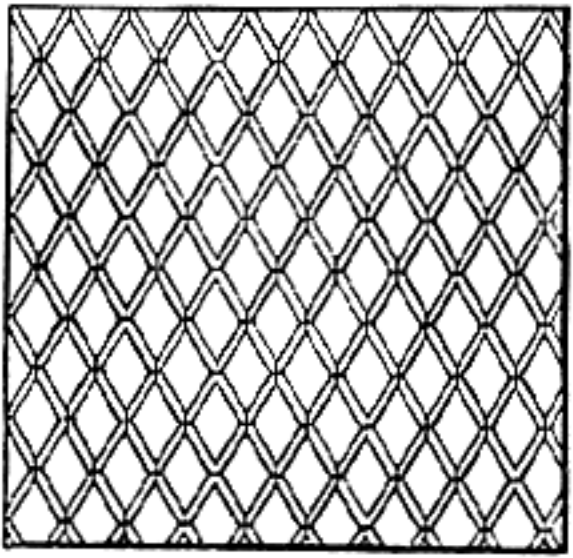

CHAPTER XII

Giving the Stock Its Final Finish

THE proper finish applied to the wood of a gun stock causes the realization that the exterior appearance constitutes the beauty of the wood. Consequently we must be very particular in selecting a high and durable finish which will be most appropriate. The various materials named here are to utilize or produce these finishes and bring the character of the wood to the surface. The next consideration is durability. The use to which the gun is to be subjected determines this in many respects. If you should have a beautiful piece of wood in a stock and only wish the gun as a show piece, French polish will constitute the ideal finish. But if you wish a durable finish which can stand the hardest usage, we must turn to what is commonly called the "dull London oil finish." When linseed oil alone is used on American walnut, it tends to darken the wood to such an extent that it kills the beautiful figure, so we must vary our methods and use other materials to bring out the character in the wood. An oil finish is more successful on English and Circassian walnuts. Italian and French walnuts also take it very nicely, altho it must be used discreetly or it will kill their beauty. Nature has woven into the fiber of each of these woods a richness and variety of coloring which is always pleasing in appearance, and in the exquisite grain and figure of these woods she has traced patterns far beyond the reach of any artist. The best finish is that which accentuates these natural beauties and enhances them with color. There are few woods lacking beauty of structure when the experienced gunmaker knows how to bring out this beauty.

The beginner's ideal must necessarily be simple so that he can make the most of what he has to work with and at the same time produce a maximum of beauty and serviceability. A wise plan will be to experiment with different kinds of woods to obtain some experience before applying the final finish. Let us take for example our American walnut. Procure four different pieces: one from Ohio, one from Pennsylvania, one from Kentucky, and one from Texas. From each of these samples finish a board as you would a stock, and have them measure ½ x 3 x 10 inches. Give each piece a coat of raw linseed oil on one side, being very careful not to get any oil on the opposite side. Stand these up on end, and let dry for two days, then polish with rottenstone, a process described later in this chapter. Stand the four in the light and see the different results one coat of oil produced on each board. On the opposite side give them a coat of filler, also described later. Then give each one a coat of French polish, which will bring out the true character of the wood. On the oiled surface, apply a coat of French polish. At that point judge the differences.

Notice how soil conditions influence the character of these woods. On the better woods, such as French, Italian and Circassian walnut, we must carry the first oiling of the wood to a certain degree and stop when the critical point is reached, especially on darker woods. On lighter grades of walnut, either foreign or domestic, the process which has always been recommended may be applied; this process is mixing one part turpentine and three parts raw linseed oil, and applying coats of this mixture until the wood will not absorb any more. This is the correct method for light porous walnut, but such a treatment would ruin a highly figured wood such as French or Circassian. These woods have a very close grain; it is impossible to penetrate with the oil and turpentine over $^{3}/_{64}$ inch under the surface of the wood, and by applying further coats of the mixture you only darken the surface and destroy all figure.

Undoubtedly this chapter will be read by the man who has had more or less experience in wood finishing, and also the man who takes great pride with his wife in choosing their furniture and home decorations. However, you will find stock finishing a very different problem and one to be treated from an entirely different angle. Then there is the amateur who does not know the first principles of finishing. He may have to select a piece of wood from his local source of supply, wood of such a nature as to necessitate a stain of mahogany or walnut to darken it so that it will resemble the more expensive walnut. Amateurs seldom choose the more expensive woods to begin with. They are likely to select one of our domestic woods, such as maple, cherry, beech, ash, birch, black walnut, or apple. When they do, it is possible to apply a stain and finally the finish to protect both the color

and wood from moisture. When chemical stains are used on hardwoods like maple, birch or apple, it is important to apply them uniformly over the surface to avoid blotched areas of color. A coat of water washed on first with a sponge just before the stain is applied will help to spread the stain evenly, if it is done before the water is dry.

The chemicals used for staining purposes are many, and they are used in various combinations. The acid and alkaline stains most commonly used are these:

Tannic acid	Lime
Picric acid	Potassium permanganate
Acetic acid	Nitric acid
Sulfuric acid	Chlorid of iron
Hydrochloric acid	Manganese sulfate
Ammonia	

Oil Finishes — All woods are composed of fibers and cells, and while growing, these cells are filled with water or sap. When the wood is seasoned, the surface cells are little holes or pores. In black walnut they are fairly large and must be filled, but on close-grained French, Italian, or Circassian, a filler is not necessary, tho desirable. At one time I never used a wood filler on any of these woods, but I have found that it will produce a more satisfactory finish on almost any type of wood.

The importance of filling the pores in wood is indicated by the fact that an expert stock-maker inspects a filled surface after it is dry with a magnifying glass. If he finds a number of pin holes in the filled surface indicating filled bridges over the smallest pores, he applies the second coat of a thinner consistency, allowing it to dry until it is hard, and then using fine steel wool to bring it down to the bare wood.

The basic materials used for mixing fillers must be ground very fine. The chief material used in a high-class filler is silica (silex). It is doubtful whether any other material is as good as a very fine water-floated silica. It is white when dry, but being quite transparent, takes on the color of whatever substance it is mixed with. Silica is inert chemically, showing no unfavorable reactions when mixed with other pigments and liquids, such as walnut filler, which is put on the market by the Sherwin Williams Company; this is what the beginner will use.

The stock to be finished in oil should be deserving of the most thorough work in preparing it for the finishing process. It should first be dusted off with a brush. Greasy hands should not touch the surface of the wood, for they will cause spots which will show through the final finish. Perspiration also produces an effect which can not be removed unless the stock is again finished. Maple will turn a pink color if perspiration touches it, so it is better not to attempt to handle this wood when the weather is extremely hot.

When the stock is thus prepared, apply a coat of filler, rubbing it in across the grain so it will fill the pores of the wood evenly. The most successful way to do this is to fasten the stock between the centers in the checkering frame. Let it stand for one hour or more and remove it with a heavy piece of cloth or clean burlap sack, rubbing the filler off against the grain. After removing the heaviest part of the filler, let it stand again for five or six hours and then go over the surface very lightly with No. 3/0 steel wool. Follow with No. 7/0 sandpaper, and apply a coat of raw linseed oil. The method thus described is for American walnut. For the fine-grained and figured woods such as French, Italian, and Circassian walnut, the oil is applied first and the stock allowed to stand for three days. On very darkly figured wood one coat of raw linseed oil may be the only application required. This is where you must be the judge, for the second may darken the wood too much and kill the figure. Then again the wood may be of such a nature that you can apply from four to six coats of the raw oil and still retain the character. When more than one application of oil is given, always allow the stock to stand three days before more oil is applied, as this length of time tends to oxidize the oil in the wood; preceding applications are only absorbed by the more porous sections of the wood, and the hard portions will build up the oil. When the desired color and figures are brought out by this oil treatment, let the stock stand one week to thoroughly oxidize the raw linseed oil. Then, with No. 3/0 steel wool completely remove any oil which has been built up on the surface and apply a coat of wood filler (following instructions given for wood fillers). Again go over the surface with steel wool, burlap sack, or heavy cloth. The stock is now prepared to be rubbed with the rottenstone process, which is treated later.

On American walnut the filler is used first; this shortens the period of oiling which must be done to bring out character in the wood; otherwise it will darken to such an extent that it will become black and void of all figure. Naturally you want to avoid this last, regardless of what other advice you may have received. The professional gunmaker strives for beauty in walnut regardless of the species, and at the same time tries to insure the wood against absorbing moisture. A few years ago nearly all the American walnut used was the common Mississippi-bottom walnut; even today this is still used by the Springfield Armory and other gun manufacturers. On this class of walnut it makes no difference how

many coats of oil are applied, for, since it is a very porous wood, it will absorb between twenty and thirty applications without harm to the figure or character. Nearly all the advice given in the past was based on this class of wood. Today we must change our ideas and work with different methods in order to bring out beauty which nature has so generously bestowed upon us, instead of hiding it.

When you experimented with the four different samples of American walnut, you were given the key to work by on the stock you are going to finish. Again you must be the judge of the number of coats of oil the wood will stand before it begins to lose its character. On black walnut there are no objections to preceding applications of oil. After the first coat, eight hours should elapse before another wetting of the raw linseed oil, for in that time the wood will absorb all the oil. After the second coat a schedule of time should be laid out, increasing the time by four hours, until you are letting the stock stand three days in order for the raw oil to become oxidized into the wood. When the oil has brought the figure and color out, let it stand one week and then use steel wool to remove the oil that has built up. The stock will then be ready for the rottenstone treatment.

Rottenstone Treatment — The tools used for rubbing with rottenstone are simply a piece of felt pad which should be fairly soft for fine rubbing and hard for coarse rubbing. You may purchase this felt in sheets from ¼ to 1 inch thick. It is sold by the pound and can be cut to suit the job. Old felt hats can be cut up, tho this felt is too thin for good work. The felt is cut about 3 x 5 inches and tacked at two ends on a block measuring 3 x 4 inches. Smaller blocks are also made, measuring 1 x 5 inches, to rub around the bead on the cheek piece. The felt is turned up at the two ends and tacked so the heads of the tacks will not come in contact with the surface of the stock when being rubbed.

There are various kinds of rubbing pads on the market, but the ones you make, as shown in Figure 85, will be best for this purpose. The narrow felt pad may be glued instead of tacked to the surface of the wood. Naturally other things may be used for rubbing, such as burlap, curled hair, haircloth, etc., but you will find that none are as good as felt for this work.

The proper procedure to follow in rubbing with rottenstone and water follows: Make sure that the raw linseed oil has oxidized well before any rubbing is done. Then place the rottenstone in a cigar box or any kind of dish that will be convenient. Soak the felt pad in water. Before any

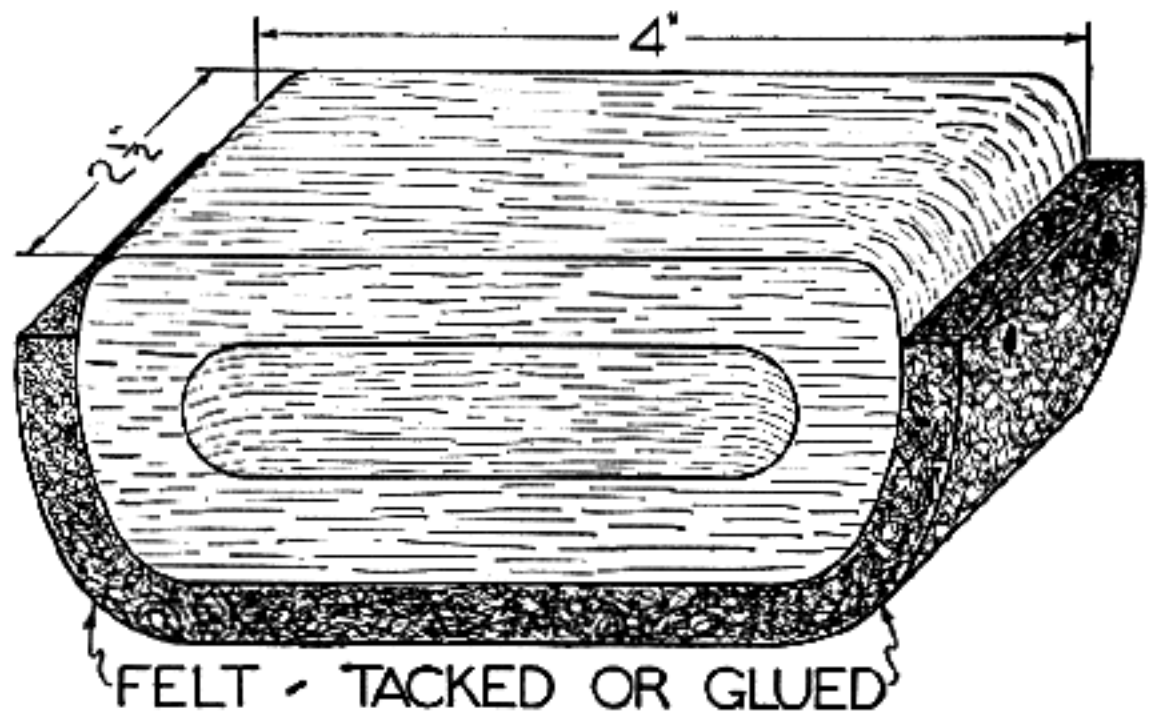

Fig. 85
Rubbing pad for polishing a finished stock

rubbing is done, place the stock between centers on the checkering frame, which will enable you to rub the entire surface of the stock at will by just running it on the centers. Dip the wet felt pad into the rottenstone to put a thin coating of dry powder on the pad, and begin rubbing the surface with a light pressure, gradually increasing it to the degree of pressure you can maintain comfortably for a long time over the whole surface where straight rubbing can be done. Change pads for the beads on the cheek piece and also the pistol grip. Rub with, and never across, the wood grain; that is, rub in the direction in which the wood fibers extend. If you rub across the grain, you will scratch the surface of the stock so that it will be difficult to remove the marks. Rub in fairly long straight strokes—never in a circular direction.

Success in rubbing depends upon doing the work thoroughly. Cover every part of the stock with the same pressure; first with coarse felt, then fine felt for the final finish. There is no need to count strokes, but a little practise will teach you to stop rubbing when the required smooth surface is reached.

Rubbing a stock is very much like sanding, for it is strenuous labor at best. However, many beginners will work much harder at first than is actually necessary. Use your head instead of your muscles, and a better job will result with less work. The rubbing is a very important part of the work on a gun stock, as it adds to the luster or depth of the finish.

Keep a sharp lookout for caking or gumming of the felt pad. To avoid this, wash the pad in clean water occasionally. The raw linseed oil which is not dry will cake on the felt easily. Of course you will get some caking from the oil, but not enough to hurt very much. There is also an oil and rottenstone rubbing which is done on the final completion of the oil finish and will be explained later in the chapter.

Muslin-wheel Treatment of Rubbing — A much faster method to produce a very satisfactory rottenstone rubbing is done on an 8-inch circular muslin wheel. These are sewn from the center to the outer edge, so before the application of paste to the wheel, the outer circle of stitches should be removed; this lets the muslin spread apart when the pressure of the stock is placed against it. Three or four of these wheels are used together on one side of the electric grinder. A heavy paste is made from rottenstone and finishing oil, or rottenstone and water. Fill a glass jar with a screw top (a pint Mason fruit jar is preferable) half full of rottenstone, and mix in the oil until it has the consistency of a very heavy paste. Coat the outer diameter of the wheel with this, working it well into the free sections of the muslin, and let stand for 24 hours. It is not necessary to let it rest on the grinder spindle, but on a hook, so that the wheels will be in a vertical position. After 24 hours, tighten on the grinder spindle and with a clean piece of planed flat walnut, start the motor and hold the flat side of the wood against the wheel to spread the paste evenly. Before the paste is applied to the outer surface, see that the wheels run perfectly true, for a wheel that runs out very badly will produce an uneven surface on the stock.

The rubbing treatments require time and labor to produce a high finish on the surface of the stock, but you will be able to produce the same results in a very short period of time, not only on the wood surface but also on the buffalo-horn tip and pistol-grip cap—also on the butt plate if you are using buffalo horn. The rottenstone and water are used in a similar manner.

An excellent paste for polishing buffalo horn is prepared by adding fine rouge powder to finishing-stock oil. Mix these together until a very thick heavy paste is formed. This is applied to new muslin wheels in the same manner as the rottenstone paste and allowed to stand 24 hours. Smooth this off with a clean hardwood surface board; when used in conjunction with the prepared rottenstone wheel to complete the final high polish on the horn, the paste must be hardened before use on such parts as the tip, grip cap, and butt plate, or any other parts where buffalo horn is used.

Having thus prepared these two wheels and the stock, you may begin the rubbing operation on the stock. When you rubbed by hand, the pressure you applied with the felt pads varied according to the method used. Now you have an entirely different condition to contend with. With a fast-revolving wheel, the speed at which the outer surface of the wheel passes over the wood is very high. Hold the stock at an angle of about 45 degrees; gently press the stock against the wheel, working it in a vertical direction with rather long sweeps on the straight surfaces with the stock held on the under side of the wheel center. Continue to pass the stock back and forth over the entire surface, always working lengthwise with the grain of the wood. Around and back of the pistol grip and cheek piece, you must follow the contours by applying very little pressure. The horn parts may be polished in any direction most convenient.

As you continue over the stock surface you will notice a high luster coming out on the wood, but great care must be taken that your pressure is even, for too much pressure tends to cause a burning effect in spots over the wood or buffalo horn. When the stock is polished to a finish which is perfect in your opinion, place the rouge wheel on the spindle and finish the buffalo-horn parts to the highest polish. With all this completed, the checkering operation is next in line.

Linseed Oil — The commercial raw linseed oil produced in this country is obtained from flaxseed by steam cooking and hydraulic processes, whereas some of the linseed oil from the British Isles is obtained by pressing it from the seed. It is passed through rollers and crushed. This is not a very economical method, but produces the finest linseed oil for gun stocks.

The latter is by far the best when it can be procured. The Calcutta raw linseed oil obtained from England is the best, providing it does not become rancid. The beginner should acquaint himself with the characteristics of this oil and its actions under common circumstances.

There is no more serviceable finish today than that produced by coat after coat of hot linseed oil. When the oil is applied hot, it penetrates more deeply and makes a more serviceable finish, especially if you are not particular about figure in the wood and intend to subject the arm to hard service, let us say in the tropics, where the wood will be likely to absorb moisture. The method used to prepare such oil for penetration is:

FORMULA No. 1
1 pint raw linseed oil
½ pint turpentine

Heat the oil and turpentine together until they reach the boiling point, and apply to the stock with a swab as soon as removed from the fire. Oil applied in this form penetrates deeply into the wood. Let it dry for an hour or so, and wipe off any excess remaining on the surface. Let the stock stand for 24 hours and repeat the process until the wood will not absorb any more, and then after each

coat rub the surface of the wood with the palm of your hand. When the surplus oil is removed after one hour, rub until all the oil disappears into the wood. Let the stock stand for three days before another application. When preparing an oil finish such as this, the finishing coats, while applied hot, must only be put on very lightly, as the previous coats have become oxidized in the wood, and what you are now putting on is building up a surface finish. The repeated heating of the same oil causes it to become very dark and heavy, and toward the last finishing application it is very thick, producing the results we want. Even tho the wood is darkened, this makes one of the most satisfactory stock finishes, for water will not spot the wood, nor will heat affect it in any way.

Boiled Linseed Oil — The pure boiled linseed oil is very difficult to obtain and the commercial boiled oil which stock makers use is the raw linseed oil with a dryer added. For the stock maker's purpose he must prepare his own finishing oil to obtain the "dull London finish." This finish brings out the fine figure in wood, and will last for years, but it is not so durable a finish as the hot linseed oil application previously described. Of course, when we use a dull London oil finish we are after different results from that of bringing out the character in a finer piece of wood. Naturally, like any other oil finish, it can always be restored by a little rubbing with the same prepared oil.

A number of formulas have been used to obtain this finish; the most reliable ones are these which I have worked out. They suit various conditions in the grades of wood, and are used to obtain the "dull London oil finish." The term "dull London oil finish" has been more or less a means for writers to describe an indefinite kind of oil finish, but 90 per cent of the gunmakers of the world have been using other means of producing such a finish on their stocks than boiled linseed oil alone or even the addition of turpentine.

The nearest real oil finish that can be given any gun stock is the one in which the oil is boiled and applied to the wood while hot. The rubbing you give it with the palm of your hand is a very important factor. The best results are obtained by continuous boiling of the same oil; by the time the stock is completed, the oil will be darkened so greatly and will be so heavy and thick that each coat will build up a harder and more durable surface and at the same time destroy all beauty or character in the wood. You will find that only a few men require such a finish, so you will have to produce another that is equal and take a shorter period of time. This is:

FORMULA No. 2

32	oz.	boiled linseed oil
4	"	pure turpentine
½	"	alkanet root

Boil the alkanet root in the turpentine. Use only enough heat to allow the turpentine to extract color from the root. Let cool and add to the linseed oil. Heat these together and allow them to come to the simmering point. See that no smoke arises from the oil. Let cool. This formula is used on light walnut when it is desired to impart a reddish tint to the wood. Use the raw linseed oil first to build up an oxidizing surface. Discontinue when the desired shade of color is reached; then apply this formula, using very little of the oil in the palm of your hand, and rub well into the surface of the wood until dry. After applying as many coats as you think advisable, let stand until thoroughly dry. There may be a good many of these oil coats, and if so, the time required will be from six to eight weeks, or even more. Be very careful not to use too much oil in the palm of your hand, for this will produce a gummy, uneven surface. If this condition should exist when completed, use No. 3/0 steel wool to remove the surface, and start all over again. When the desired finish is obtained, and the oil has been built up to a raised and hard condition from the surface of the stock and looks well, attach a clean piece of felt to the rubbing block and sift rottenstone through a cloth bag. Soak the felt in sweet oil and then in the sifted rottenstone. Rub the surface, using very light pressure on the rubbing tool, always in the direction of the grain. Continue until a very dull finish appears on the surface. Wipe the stock, removing all traces of sweet oil and rottenstone, and let stand for three days; this may be followed with a treatment of Formula No. 5 or 6.

FORMULA No. 3

32	oz.	boiled linseed oil
1	oz.	spar varnish
3	oz.	turpentine
200	grains	beeswax
3	tsp.	Venice turpentine
2	oz.	burnt umber

Heat all together, allowing the mixture to come to a simmer, or until small beads appear on the surface. Let simmer for ten minutes; allow to cool and pour in a bottle to be used as needed.

This formula is used for medium dark woods where figure must be retained after the raw linseed oil treatments and rubbed down with rottenstone, thus preparing the stock for this formula. This oil is rubbed into the wood in the same manner as in Formula No. 2, and continued until the desired finish is obtained. You will find a different

condition existing when you first begin to use the oil. The surface of the wood will have a broken finish where some of the oil has penetrated and partially remained on the surface, but this will disappear as each application is given. Two days or more should elapse before another rubbing is given, and after it has been rubbed it must be placed in a warm room free from dust. You will notice how atmospheric conditions cause the oil to remain "tacky" on damp days. During such weather, let the stock remain for a longer period before another rubbing takes place. This formula brings out a beautiful finish, and gives the effect of looking at the figure of the wood through a glass. It is also very durable. Apply the rottenstone and sweet oil as in Formula No. 2.

FORMULA NO. 4

32	oz.	boiled linseed oil
3	"	shellac
3	"	turpentine
1	"	burnt umber
200	grains	beeswax
½	"	alkanet root
1	tsp.	Venice turpentine

Heat turpentine and alkanet root together to extract the color. Do not allow to boil, except to a point where the desired extraction is obtained. Strain through filtering paper and add other ingredients. Boil very slowly for twenty minutes as described in previous formulas.

The oil thus mixed is for very dark Circassian, French, or Italian walnuts. The proper number of raw linseed applications were given to bring out the dark character of the wood. Only one or two coats of this oil were probably used to attain such results because the figure might have been ruined. An experienced stock maker can tell when the correct number of coats have been applied. In time you will know before you ever begin to oil the wood just what the wood will require, but the beginner must solve such problems himself, and the best and only way this can be done is to save scrap pieces of wood from the blank you are working on. Finish one side as you have your stock; then make one application of raw oil to see just what the results will be, letting it stand one or two days. The first application will give you an idea of just how dark the wood is, but the second, third, and fourth may kill all figure if it is a finer blank.

These are the basic formulas used on walnuts of the highest grades. On the lighter low-grade blanks of European walnut, hot raw linseed oil and turpentine may be used. On the black or American walnut of the better grade, the three last formulas may be used to obtain the "dull London oil finish." You will find that all mixtures are of a flexible nature, and may be applied in a variety of ways to a number of woods. The finishes which you will obtain from using these formulas are of a lasting durable type, and when great care is taken you will find that the luster improves with age, and that water does not injure it greatly.

You will probably wonder why varnish and shellac have been added to the boiled linseed oil and other ingredients. Very often formulas call for shellac, one of the substances used in a finishing oil, tho it does not produce as durable a finish as the spar varnish. Shellac may be used as a filler after the raw linseed in a number of instances on very fine wood. One coat is applied and the surface rubbed down with No. 3/0 steel wool; then sanded with No. 5/0 and No. 7/0 sandpaper, and then with rottenstone. The shellac has completely filled the pores of the wood, and when the finishing oil is applied, it begins to build up on the surface and does not darken the wood any further. Venice turpentine is added to the formulas to prevent cracking of the varnish or shellac; this is advisable when varnish or shellac is used. Alkanet root is used to impart a red tint to the oil, very desirable when a piece of wood is void of an attractive color. Burnt umber is added to give a dull appearance to the finish, and at the same time to fill the small pores of the wood. If you should wish an exceptionally lustrous finish, it is possible to use China-wood oil or tung oil, which is obtained from the China-berry tree. This oil is a little more expensive than the boiled linseed oil and not as desirable to use. It is put out by paint manufacturers for painting steel office furniture. The China-wood oil, to which zinc is added, has a poisonous effect on some men's skin, especially when the cheek comes in contact with it; therefore avoid its use. A very good polish for a gun stock after you have oiled it is made as follows:

FORMULA NO. 5

4	oz.	boiled linseed oil
8	"	turpentine
8	"	beeswax
1	"	Venice turpentine

Melt together over a slow fire. A finish in which wax is used is not intended for durability, but for beauty; nor is it to be recommended for an undercoating for the last three formulas, as it will not wear well.

Another good stock polish is made as follows:

FORMULA NO. 6

1	pint	boiled linseed oil
200	grains	gum arabic (dissolved in alcohol)
1	oz.	alkanet root
200	grains	rose pink
150	c.c.	vinegar

Heat together for one-half hour, but do not al-

low the mixture to come to the boiling point; just let it simmer gently. To apply this polish, rub a small quantity on the stock, and let remain for ten hours; then rub it clean with linen cloth. With a few such applications you will bring out a very superior finish. This is also an excellent polish for furniture. There are so many different furniture polishes on the market that the beginner must use good judgment if he should decide to use one of them on a gun stock. If you must us a furniture polish for a shellacked or varnished stock you can make a very good polish as follows:

FORMULA No. 7

20	oz.	raw linseed oil
2	"	alcohol
8	"	dilute acetic acid
1	"	solution of ammonium chlorid
½	"	spirits camphor
1	"	antimony chlorid

Add the antimony chlorid to the oil, then the camphor and acid, and finally the ammonium chlorid. Shake after each addition.

French Polish — French polishing consists of the repeated rubbing of shellac into the stock, using a "rubber" or pad that is slightly coated with raw linseed oil, which makes the rubbing easier. First, prepare the wood with raw linseed oil until you have the correct color or character of the wood showing. If you are using a light piece of wood, it is far better to stain it first, which operation will be explained later. After oiling, the wood filler is used, followed by the shellac polish. As shellac is affected by cold and dampness, the work requires a temperature of not much less than 70 degrees. Shellac is rubbed into the wood until it is filled and the surface made smooth with a soft polish. It is a very beautiful and durable form of stock finish. Orange or white shellac is used, and to this any desired coloring may be added.

The "rubber" used is made of clean woolen cloth, rolled up into a bunch. Over this is drawn a piece of clean soft muslin, the edges drawn up and over the sides of the rubber and tied, thus forming a handle to hold while using. For irregular surfaces, such as those around the comb, pistol grip, and cheek piece, make a smaller rubber in the manner described. They must be perfectly smooth on the rubbing surfaces, and free from wrinkles or creases.

When ready to polish, apply a small amount of shellac to the face of the rubber, being very careful not to get on too much. The idea is to have on just enough shellac to cover the given surface. If too much is used, it causes a ridged effect, spoiling the work; hence, it will be seen that the process requires great care and skill. Having applied the shellac to the face of the rubber, apply to it also a few drops of raw linseed oil, the oil making the rubbing easier and smoother.

Begin rubbing at a certain part of the work and rub evenly with very light pressure, working in a circular manner until you gradually reach the opposite part of the stock. Occasionally, apply a drop or two of oil to the rubber. After you once start rubbing, keep the rubber in motion until you have reached the end of the work; and even then you must not stop abruptly, but gently slide the rubber off the work, and so leave no ridge or other mark that will have to be removed. This is very important. Do not allow your rubber to become dry as you rub, but apply a little more shellac and oil. After you have rubbed in several coats, a soft luster will begin to appear. Each time you apply shellac to the pad, rub it in a circular direction in the palm of your hand, thus equalizing the shellac on the pad. If the muslin covering becomes shiny, put on a new covering.

In case you should be unfortunate enough to have rubber marks appear on the surface of the stock, remove them by rubbing with the wet rubber, but beginning at a point where you left off and working in the reverse direction.

Place the linseed oil in a saucer if you wish, and the shellac in another; however, a bottle is better. In removing rubber marks, use a half-dry rubber and bear with somewhat greater pressure than when rubbing at first. Rubbing too much in one place will result in softening the whole body of the polish, causing it either to rub up or rub into ridges. If the room is too cold or too damp, it will produce a milky surface. To remedy this, place the stock near a fire, and let the heat act upon it until the milky effect disappears.

Apply only one coat of polish a day, but rub in enough coats to form a good film of shellac on the surface of the stock. Continue this until you have a well-built surface, which may require a week or longer to complete.

If the work shows a uniformly even surface, it may be "spirited off." This is done with alcohol and the rubber you used to polish with. The operation requires great care, as the alcohol injures the polish easily. Pass the rubber, dampened with alcohol, lightly and quickly over the surface, being careful to use it very sparingly and with constant care. This operation removes the oil left on the polish, which if not removed would mar the surface by dimming it. After doing this—if the work has been done properly—the polish will appear bright and beautiful.

Sometimes it is better to use a new pad of clean

muslin over a pad of raw cotton or cheese cloth. Again I repeat, rub with a circular movement. French polish is very desirable on shotguns or factory-made arms of the better type, and answers very well; 90 per cent of the gun owners are far better satisfied with it even tho the oil finish is superior.

Violin-varnish Finish — Fossil gum amber is the right kind of varnish to produce the violin finish so many admire. Of course it is not altogether recommended for gun stocks; yet many prefer it, so it is well for the gunsmith to have such information as this on hand. The varnish is finely colored in various tones or tints, as follows: golden yellow, golden amber, golden orange, light golden, red, dark ruby red, deep blood red, reddish amber, golden brown, and very dark reddish brown.

Not the wood but the varnish is stained. First, the stock is prepared with the usual sanding and rottenstone treatments, and a coat of white or very pale varnish is rubbed into the pores of the wood. This is left for a week, then a second coat of varnish is applied. When the second coat has dried sufficiently, it is rubbed down either with rottenstone or with pumice and sweet oil, to secure a polish. Wipe off very thoroughly. From two to five coats of the colored varnish—just enough to produce the required depth of color—should be applied. To do a good job will take about three weeks, and a finer job will take longer. The varnish dries very slowly, but produces a tough and durable finish. The glossary of chemicals and substances, Volume II, contains a number of coloring materials to use in the varnish to produce whichever effect you may have chosen.

Stains and Their Uses — There are two kinds of stains used in the staining of wood for a gun stock, and it is well to learn their characteristics and the best use you can make of them. They are: water-soluble anilin and other coal-tar dye colors; chemical stains (acid and alkaline). The uses of the former are not well known, even tho the substances are the more modern for staining wood. The chemical-acid stain is more commonly used to change the color of woods such as maple, beech, birch, cherry, ash, and light walnut. The chemical stain penetrates deeper than any other kind. When used hot it penetrates deeper than when cold, and when the wood, being stained naturally, contains some of the same chemicals as constitute the stain, it penetrates the wood even deeper. It is well to keep in mind that man does not create acids and alkalies. The chemist doesn't create anything; he simply separates and concentrates acids and alkalies from other substances. For instance, one of the stain chemicals much used is tannic acid. It is a chemical concentrated and separated by chemists from oak bark and gall nuts, from a vegetable substance called tannin. Most lumber contains tannic acid, some a larger amount than others. It is all quite simple and very interesting, yet most of us, not being chemists, feel that we cannot understand these things. We might profitably understand much more of chemistry, which is so interwoven with life that we meet it at every turn, if we would but pursue the subject a little more.

The use of chemical stains by the student is a little uncertain at first because it is not easy to determine how strong to make the solutions to produce the color wanted. You must test samples of the wood to be used in the particular stock, and mix these accordingly. After a little experimenting, you are able to measure chemical solutions to better advantage before you put them on the surface of the stock.

The colors produced by chemical stains are the most permanent known, usually because they bring about natural chemical changes in the wood and penetrate deeply. Chemical stains should be mixed and stored in glass or earthenware jugs and kept corked tightly when not in use. Some mixtures destroy tin or other metal containers very quickly.

When chemical stains are used on hardwoods like maple, it is important to apply them uniformly over the surface in order to avoid blotched areas of color. The chemicals used for staining purposes are many and they are used in various combinations, of which there is a list given in the first part of the chapter. I shall mention here only some of the colors chemicals will produce on light woods.

Nitric Acid—This acid diluted with from four to six parts of water produces yellow stains. When less water is used, the color resulting from it is a reddish yellow, depending on the kind of wood. When used raw, the color is a reddish brown.

Tannic Acid—When this acid is diluted with water and brushed on a stock, it is the basis of a brown stain. The strength of the solution used, of course, governs the shade or color.

Potassium Permanganate—This is one of the most useful chemicals for the beginner. It was one of the first chemicals I began to experiment with to produce a Circassian effect on common walnut used on factory arms. It comes in violet crystals and is to be dissolved in cold water. The colors resulting from its use are beautiful transparent nut-browns; when a saturated solution is used, it is possible to stripe and zigzag the solution on the wood, and when finished you will have an almost

unique effect. The stronger the solution, of course, the darker the brown color will be. Two coats are needed for a very dark stain. Another method I have used—before staining the stock—was to cut strips of paper out in odd forms in the natural form of the grain. These were pasted on the surface of the stock, running lengthwise with the grain, and the entire stock stained with one or two coats of the solution. The strips of paper are used as a mask, and also produce a unique effect where they have been removed. This method may be used when wood is void of figure or character.

The foregoing are the main chemicals used on stock work. Others, such as hydrochloric acid, picric acid, sulfuric acid, copper sulfate, potassium chlorate, sulfate of iron, and chlorid of iron, all produce different colors, but the formulas most useful for the stock maker follow.

FORMULA No. 8. STAIN FOR MAPLE

60 c.c. nitric acid
200 c.c. distilled water
10 c.c. tincture ferric chlorid
50 grains fine steel wool, free from oil

Put steel wool in a bottle and add the nitric acid, which causes a violent reaction. After the acid consumes the steel wool, add the other ingredients. To use, saturate a piece of cotton with the acid. Rubber gloves must be worn when applying this solution. Rub over the entire stock. If the first application produces the desired results, have a saucer full of strong ammonia (28 per cent gas) at hand. Saturate with cotton and rub over the entire surface to neutralize the acid. Allow to dry and refinish the surface to a light polish with rottenstone. Then give the stock either an oil or French polish. If French polish is to be used, one coat of raw linseed oil may be used with more satisfactory results. This formula gives a very beautiful yellow stain to the wood.

FORMULA No. 9. STAIN FOR MAPLE

5 c.c. tannic acid
95 c.c. distilled water
3 c.c. pyrogallic acid

Mix and apply the same as Formula No. 8. After the wood is dry, use ammonia to bring out the brown stains and at the same time neutralize the acid. You may find it necessary to vary this formula to obtain the desired shade of brown. You will learn this by experimenting with sample pieces of wood.

Copper Sulfate—When dissolved in water, it makes a stain which colors some woods jet black and some gray. The color penetrates deeply and is permanent.

Potassium Chlorate—Dissolved in water, it makes a stain which colors some woods jet black and some gray, or produces a weathered effect. The color is permanent and penetrates deeply.

I have only used these last two chemicals to experiment with; they are two of the common chemicals used in different bluing solutions. A student may find uses for them on some classes of wood, and it will be well to carry your experiments further, perhaps making a formula which will become very useful.

FORMULA No. 10. CHERRY STAIN

½ oz. lye (strong)
4 " annato
2 qts. distilled water

Boil until the annato is dissolved, and add the ½ ounce of lye. This formula is used for light-colored wood. Brush on while hot, using one or more coats and letting each dry before the next application. Use finishing treatments as given in Formula No. 8.

Light walnut, or even an expensive blank, may be stained a very permanent and beautiful dark brown by exposing it to ammonia (28 per cent gas) in a closed box or cabinet. Suspend the stock in the center of the constructed cabinet or large card-board or wooden box, by means of a wire or heavy string. Stand saucers filled with ammonia in the bottom, close the box airtight, and allow to remain ten hours or longer. The fumes of the ammonia will change the color of the wood very satisfactorily. This method is valuable to know, especially if you have completed a carved stock; any other method of staining would raise the grain in the cuts, which could never be finished again. This formula never raises the grain of the wood the least bit.

Varnished Stocks — Varnishing is one of the most unsatisfactory methods of finishing any stock, and one which I cannot recommend when all these other well prepared formulas are given. If you want this type of finish, by all means use lacquer.

Lacquer Finish — This is one of the quickest methods known in stock work and can be used on the wood after the final rottenstone treatments are given, as the wood does not require any filler whatever or any other preparation. Lacquer must be applied with a sprayer or air brush. Place the stock between centers of the checkering frame where it will be possible to turn it freely when applying the lacquer. There are several brands of lacquer on the market, but Du Pont's clear burnishing lacquer is perhaps the best. A stock treated in this manner will dry very rapidly and can be used

one hour after the coats are blown on; the finish will be water-proof. Naturally it looks like a light varnish finish, but it is far superior. This finish is only recommended when a stock is wanted in a hurry. In time it will probably be removed and a real finish take its place.

Removal of Varnish — The beginner will find a considerable amount of this work to perform on old stocks and stocks on the commercial arms which have been shellacked or varnished. Varnish is largely composed of vegetable matter, hence it is easily attacked and destroyed by an application of either alcohol or alkali. Alcohol answers well for removing varnish from a stock, but its slow action makes it less desirable than other removers on the market; these, however, affect the new finish more or less, especially a French polish. True, alcohol affects the surface of varnish, as any one having spilled any on a varnished object knows; but that is quite different from eating through the heavy varnish on some old stocks; on a shellacked stock it is preferred.

The simplest alkaline remover may be made from a pound of sal-soda added to a gallon of water. This may be made stronger if necessary up to the point of a saturated solution. Apply freely, and while the surface is still wet, rub off with No. 3/0 steel wool. When finished, rinse, using plenty of clean water to remove the alkali. Follow with a coating of acid water to neutralize the alkali. Wipe dry with a clean, dry cloth, and let the stock stand until it is perfectly dry. Vinegar or ammonia made in a solution can be used to neutralize the alkali and does not have to be washed off, as it will do no harm. If the stock should be more or less discolored from the acid wash, and is not going to be stained, apply a wash of oxalic acid to bleach it.

Ammonia water may also be used for stocks. This is preferred to sal-soda as it evaporates and leaves nothing to injure the next finish. Also, if you should wish to remove old filler out of the wood, there is nothing better than ammonia, used with a stiff bristle brush. Ammonia is the only chemical that can be used on some of the Mannlicher stocks to remove the substance they apply for a finish. However, it will always be necessary to bleach the wood with oxalic acid as previously stated.

You can make a compound of two parts ammonia and one part turpentine which will, with shaking, form a permanent emulsion that can be used. When using ammonia, always procure the product containing between 26 and 28 per cent gas, as the common household ammonia is not suitable for such purposes. Nearly all removers sold are made from fusel oil or some such spirit bases and are highly inflammable. Fusel oil forms the basis of ether, guncotton, collodion, and banana liquid. It is a rank poison, and should be handled only by those familiar with it. It is a sure remover, and can be used in a variety of ways: for cleaning old paint brushes, removing tar, shellac, copal, varnish, lacquers, paint, etc. Some may wish to mix such a formula, so here is a sample mixture for those who can not secure the ready-mixed.

FUSEL OIL MIXTURE

4 oz. benzol
3 " fusel oil
1 " denatured alcohol
½ " camphor

Mix together, increasing proportion for large quantities.

The commercial removers should be used economically to avoid waste. This is the best way to use them on a stock: First, coat the surface all over with the remover, which is applied with a brush. Let it work a little while before trying it to see how it is eating into the old finish; if, in trying a part, it loosens up readily, it may be removed by scraping it off with an old knife; but if it does not loosen up readily, then apply another coat. The idea is to get the old coat soft by saturating it and softening it down to the wood, so that it may be easily removed by scraping and using No. 3/0 steel wool. After the complete removal of any varnish, shellac, or lacquer, the stock must be sanded and polished to bring out a high finish again.

Buffing-wheel Polish — We must always devise means to eliminate hard labor, especially on stock work. When an electric grinder is included in the equipment of the gun shop, this valuable addition is a means of cutting down hours of hard labor. It can be used not only for grinding, but for buffing a stock. The wheels commonly used are the 8-inch muslin sewn wheels, the canton-flannel sewn and the fine sheepskin wheels. Remove one of the emery wheels from either the right or left side, then screw the buffs in place. They come in thin widths; thus it is necessary to buy from three to four sections so that it will be possible to have a large surface to work with when it comes to the polishing operation. The new wheels are sewn from the center to the outer edge in a spiral. Before using these, the outer thread must be removed so that the layers of cloth can be spread apart when pressure is brought against them in the act of

polishing. A description was given in the first part of the chapter of the wheel as it was used for the rottenstone treatment. Now we use it for the complete polishing of the oil finishes, and also in the treatment of the polishes used after the oil finishes have been built up by the buff method. It is impossible to eliminate the hand rubbing entirely, but we can produce a finer surface finish than we could by applying the rubbing alone.

Select an oil formula you wish to use: apply the first coat in the usual way, rubbing it on with your hand, as previously described. Then apply the same oil very sparingly to the face of the buff, either muslin or canton flannel. Start the motor, and with a flat clean hardwood board, gently press against the surface of the revolving wheel until the oil is evenly distributed over the face of the buffs. Let it remain thus for eight hours, and also let the stock stand for the same length of time before the buffing or polishing operation is begun. Do not apply too much pressure on the wheel, but press the stock against the fast-revolving surface gently, lengthwise to the grain of the wood wherever possible. Stay away from the checkering, and when it is necessary to polish in sections where checkering is used, use the edge of the wheel. At times you will find that it is impossible to follow the grain lengthwise—around the pistol grip or cheek piece, for instance. You must then polish in the general direction most practical. Be very careful when coming up to any sharp edge of a cut-out, such as the magazine or receiver section, that you do not break the edges of the wood, or come over the center of the wheel, allowing it to catch and jerk the stock out of your hand, which may injure it beyond repair. After completing the polishing (your judgment must determine the time), put the stock in a dry place for two days and repeat the operation. Do not apply any more oil to the buffing wheel, for as a general rule the remaining oil in the cloth is sufficient to last about one week before any more is needed, and then only a few drops will suffice.

The time required to complete an oil finish by this method can not be given, tho it takes less, and far better results are produced. After completing the polishing with either the muslin or canton-flannel buffing wheels, apply the final finish with the fine skin wheel with the wool on the outer surface. Apply a few drops of the stock polish to the surface and gently press stock against the wool as the wheel revolves. This brings out a very fine luster on the surface.

The checkering or carving of a stock is always done before the finishing oil is applied, and when the checkering is finished, one application of raw linseed oil is brushed in with a tooth-brush and allowed to remain thus for one day before the finishing oil is applied. This gives it time to soak well into the wood, and no further applications are necessary than the one coat of raw linseed oil.

The finishing of gun stocks is an art in itself.

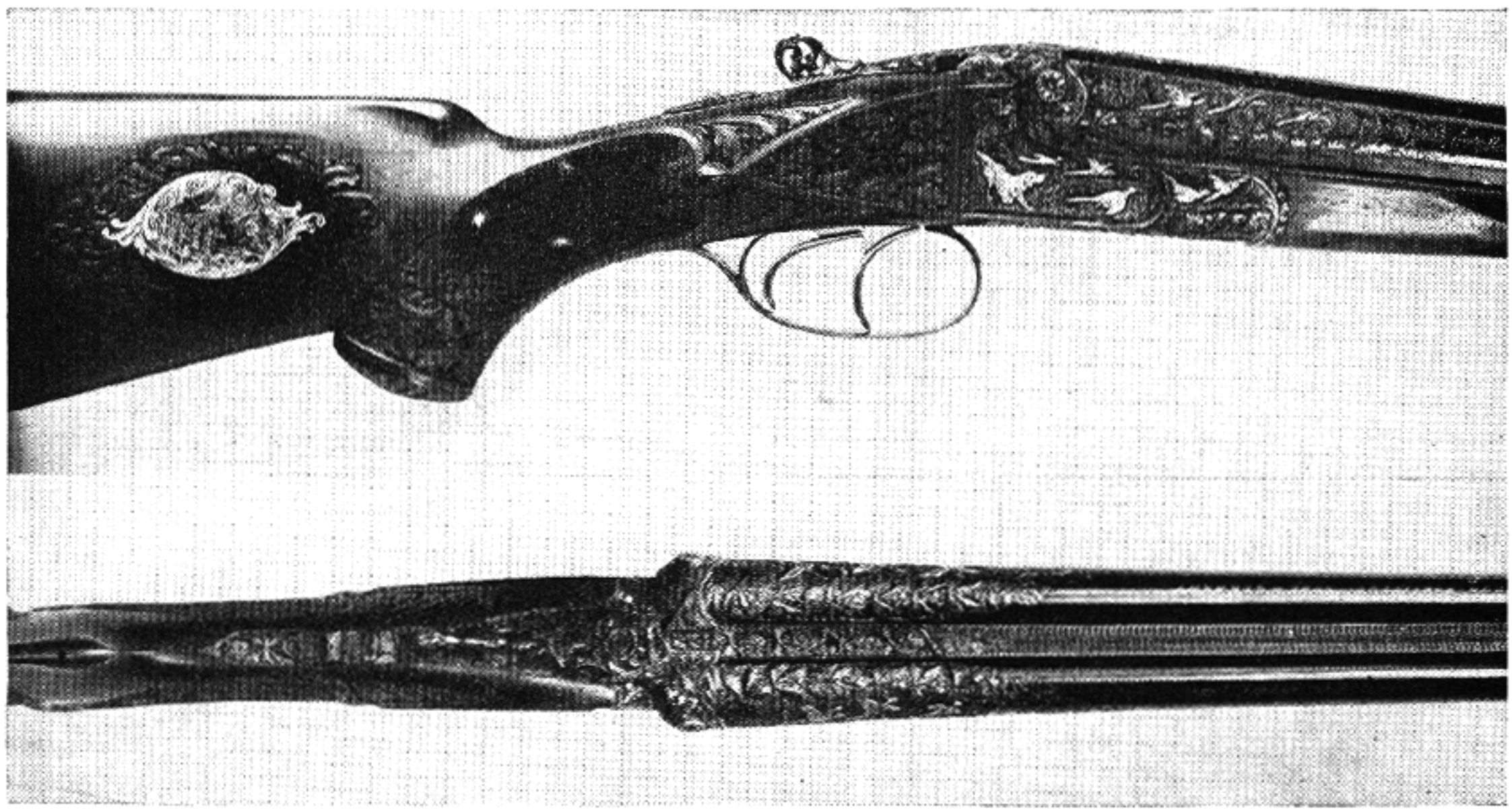

Fig. 86
Beautiful example of the gun maker's art. By V. Chr. Schilling. An object of perfection

It makes little difference what kind of wood you use. Modern methods will develop finishes that are truly beautiful, and they call for the complete knowledge of the characteristics of the wood you are working with.

It is characteristic of the members of the present generation that they must have things placed before them in such a complete manner that very little effort is required to solve any problem. Stock finishing is an art of a technical nature, and the knowledge to be gained from this chapter only touches the surface of the possibilities that may arise in the future. I have cited materials and methods which produce finishes equal to the present-day demands for practical and artistic finishes.

Nature has not been as kind to some woods as to others, just as she has neglected some women and heaped her blessings on others. However, she has in most cases balanced things in some way, so that these unfortunate objects have other charms which more than make up for their deficiency in beauty. We have noticed that many women who are naturally beautiful destroy their natural charm by trying to make themselves even more beautiful with the aid of various artifices. It is possible to do this same thing to a beautiful piece of wood. Figure 86 not only shows artistic beauty in the engraving and carving, but also natural beauty in the wood itself, as an aid in keeping with the designs on the metal parts.

CHAPTER XIII

Checkering, Carving, and Inlays

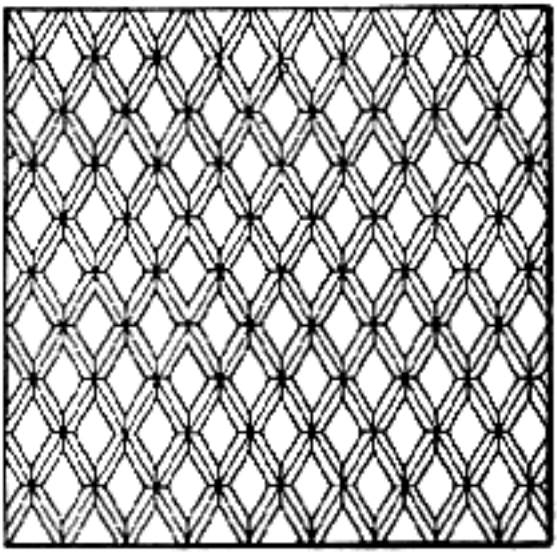

CHAPTER XIII

Checkering, Carving, and Inlays

BEFORE the amateur attempts to checker a new stock, he should diligently practise until he feels capable of reproducing as nearly as possible a perfect execution of design. It will prove fascinating, and if you are the type of person who takes joy in seeing his hands perform artistically, I need say nothing further about constant application. Checkering forms a very appropriate means of decoration on a gun stock, but its main and practical use is to give the hands a better grip. It is especially useful when the hands become moist from perspiration. The appliances used are a cradle to hold the work; checkering tools, which consist of border, matting, and beading tools; flat chisels, and a three-square needle file. Contained in Chapters I and II are descriptions of these tools, stands, and frames.

Checkering is an art of the gunmaker's trade requiring the utmost patience, concentration, and perseverance to learn. It is much the same as engraving, tho far less complicated. If I have seemed discouraging, do not be bothered, for I have examined many checkering designs executed by students that were as fine as professional work; those which were good revealed the calm disposition of the artists who used deliberation before cutting each line. A nervous type of person who tries to finish a job in the shortest possible time produces failure.

A well checkered stock should be in harmony with the body outlines, and where there are points, have points on the opposite end or forearm. Points should match on the front end of the design on the pistol grip, but at the rear of the checkering the border should form a neat curve in line with the body curve of the stock. All other lines should be made so that a pleasing effect is produced throughout. Do not make harsh or broken lines, or place radii where they should not be. When laying out these lines, gracefully terminate them at a point either on top or bottom. Draw a number of designs out on the drafting board until you find one suitable for the stock you intend to checker.

Old stocks which have been discarded, say from old military arms, can often be a means of improving your ideas, of which width of checkering is the most appropriate. When checkering was first placed on a stock the lines were as much as 1/8 inch apart or more, which is eight lines to the inch. Some had very wide lines, as much as 1/4 inch apart, with two finer lines, and in the center of the diamonds a bead was formed. This type of checkering is usually found on muzzle-loading shotguns and dueling pistols. The student can copy these on a Springfield, Krag or Enfield stock, using his own particular methods, even tho the design is filed in with a three-square needle file. I would suggest Figure 87 for practise.

Since the pistol grip is the most difficult part to lay out, we shall start with this. Figure 88 illustrates various designs; I would suggest No. 1 to begin with, for this is the plainer type. When this is completely drawn on paper, compare with the grip for correct size, and see that all lines are in exact proportion. If you are satisfied with the design in every detail, paste it on thin cardboard or heavy paper and cut out. This pattern may be used either for the right or left side of the pistol grip by reversing the pattern.

Place the pattern in position, and with a sharp lead pencil make lines all around the outside. When you begin laying out this design, the two lines which formed the V were constructed so that they formed a well proportioned diamond. When laying out a diamond, use a center line; the correct angle is 15 degrees on a side or 30 degrees included. This rule is only true on a flat surface, so in the design of diamonds for gun stocks we must disregard this rule and lay out the diamonds so that they will come as near to a sharp point as possible in the beginning. When you checker around the curved surfaces, the long pointed diamond may be lost and look rather square before the checkering is finished.

For the design laid out in lead pencil, you will need either a 12-inch flexible scale or a 1/64x1/2-inch piece of finished spring steel, the length being about 15 inches. This is used to carry out long lines, and since it is flexible, it will be possible to carry out the lines on a curved surface. With the rule, extend the lines out from the V to the bor-

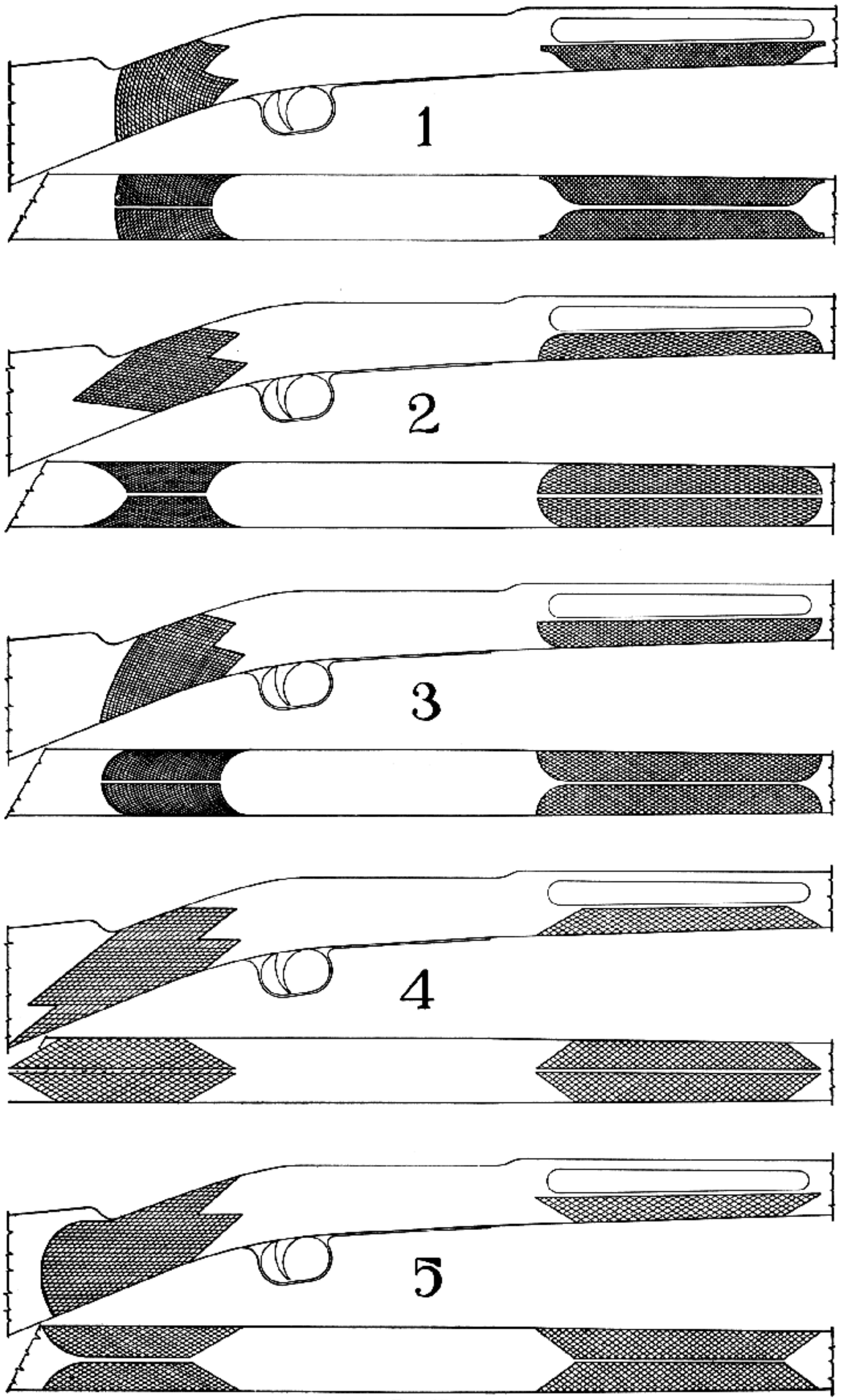

Fig. 87
Simple checkering designs—suggested for an amateur's first attempt on a military stock

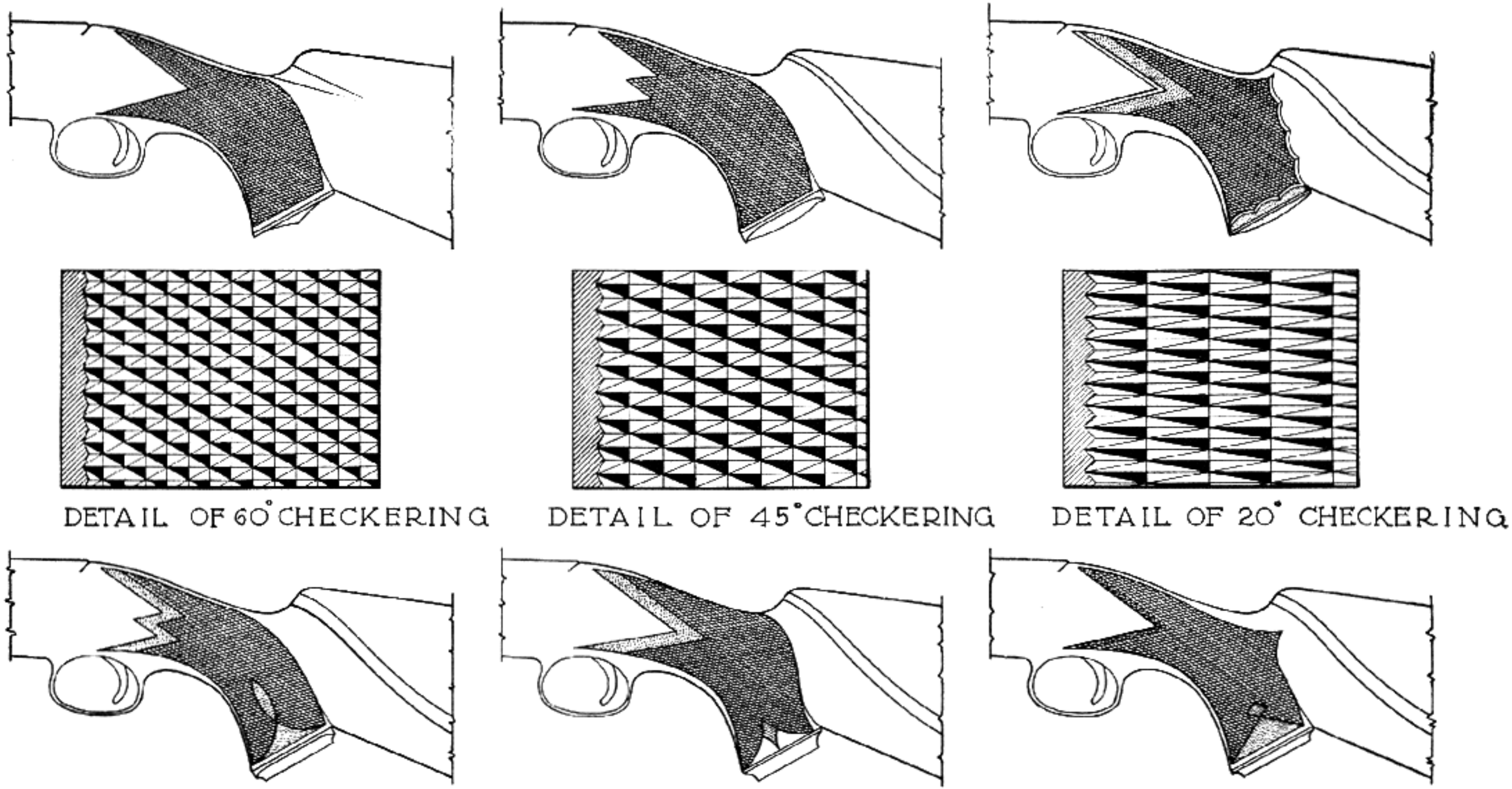

Fig. 88
Pistol-grip designs

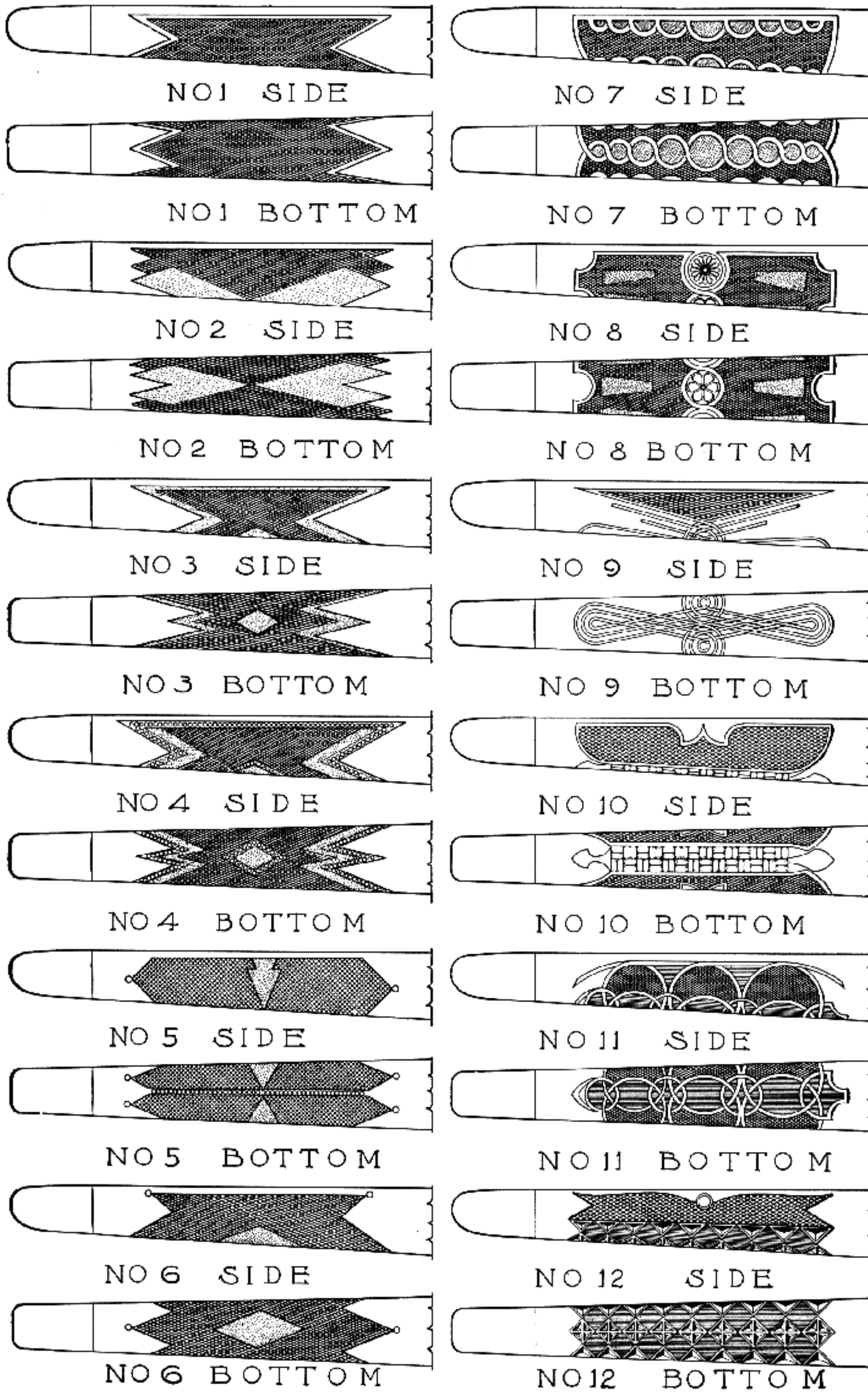

Fig. 89
Forearm checkering designs

der. Mark out the pencil lines with a bent needle file or the starting tool which is shown in the set. After you become familiar with the three-square needle file, continue its use instead of the starting tool, for with it you can make very delicate lines and follow sharp curves with less difficulty. When the outlines are filed on the sides of the pistol grip, you are ready to checker; but before this we shall lay out the lines on the forearm, using No. 1 design in Figure 89.

There are a number of different designs to consider, but we must select No. 1 because it matches No. 1 on the pistol grip. Measure from top of the barrel channel between ¼ and ½ inch according to the border you wish to use, and with a pencil, establish the length of design. This must be of an equal distance between the fore-end tip and magazine tang. For an illustration, let us say that you have placed the line ahead of the tang one inch; then you will place the forward line one inch back from the buffalo-horn tip, and the distance between will balance the checkering very nicely. This rule may be disregarded when special designs are used, but it is a convenient way of holding the center of the forearm. With the two top border lines laid out, establish the bottom center line, which must be straight between the tang and center of forearm tip. When six points are established, three at the rear and three at the front, lay out for the diamond, starting from the rear. Before doing this, check the difference with dividers between the center line on the front and the border; also at the rear. Since the forearm is tapered, the first measurement will be much less than the rear, so we must allow for this difference, thereby lengthening out the line from the border to the forward center, which will be three times the width of the diamond. Thus the top line will be ahead of the bottom line, which is the difference between the front and rear measurement. To come out even on the forward point, as you begin to checker from the center to the border, length is always lost because of the curve of the forearm. To avoid this, as you finish up at the front, establish the forward points so that they will be neat and even.

As an illustration for this lay-out, suppose the difference between the two centers is 1 inch and the length of the design on the forearm is 6 inches; to have the diamond come out three to one it is necessary to place the first line ahead 4½ inches on the center, and the line on the border 3½ inches. You will find that when the lines are crossed and connected, the front V will come out evenly.

Gently tap dental burrs which have been ground to a point, or pins, in the centers. Six will be required—three at the rear and three at the forward lay-out. Stretch a piece of music wire measuring 1/64 inch in diameter, or a trifle larger, between the pins as Figure 90 illustrates. By drawing the wire taut, it will give a true straight line over a curved surface. With a very light hammer, gently tap the wire and make an impression in the wood which may be followed with the bent three-square needle file or starting tool. Another method often used is to chalk a piece of string, tighten it between the pins, and gently tap the string for an impression. The wire is more reliable, for it follows curves much better than string, and makes a truer impression. The flexible scale or rule is used for the border and center lines. After the lines and borders are laid out, and lines are either filed or established with the starting tools, the checkering is begun.

Practise—Before checkering a new stock, first do a considerable amount of practise. When you have completed laying out your first simple design on the stock, you will be tempted to start checkering immediately; but it will be far wiser to do a similar piece of wood, such as the forearm, checkering this part first since it is more simple than the pistol grip. Form the sample piece of wood so that it will be possible to place it between the centers in the checkering frame and lay out the same lines. Select a wide spacing such as .050, .06, .07, .08, .09, and ⅛, which give between eight and twenty spaces to the inch. The gunsmith will have a number of double-spaced checkering tools

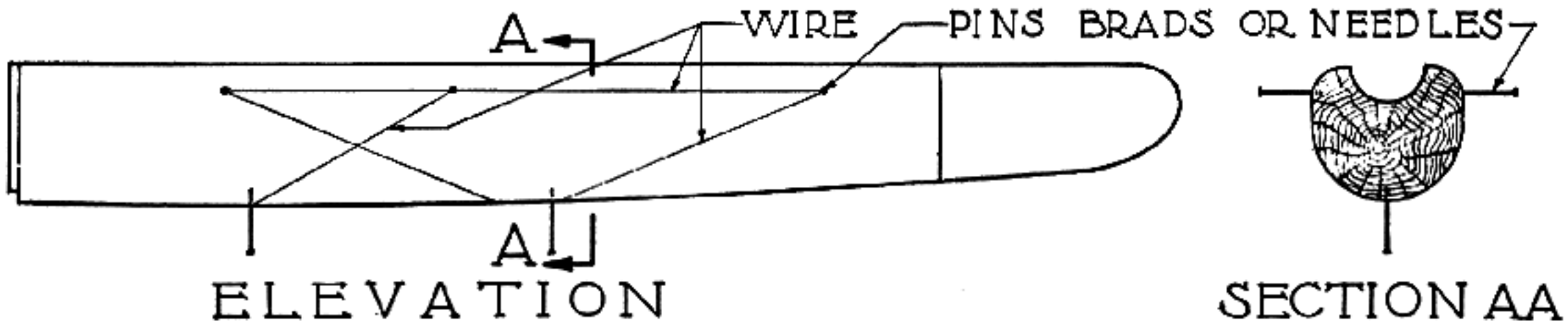

Fig. 90
Laying out a checkering design. The pins are in position to stretch the wire or string so that master lines can be penciled in

that produce between sixteen and twenty-eight lines to the inch. When the spacings reach above twenty-two lines to the inch, great care must be exercised to make all lines come out evenly and straight.

You will find that a checkering frame or cradle is just as important as the tools; the stock is continually being turned between center, as it is checkered. There are different ways of making a checkering cradle, but Figure 26 illustrates the correct way. In Chapter II two simple models are described. These may be held in the vise; however, if you do much checkering, the standard cradle will be the most convenient. The simpler models are made of any 2 x 4-inch wood; they are only temporary and can be made very quickly. When it is necessary to adjust for distance, remove the wing nuts and place the bolt in one or the other bored holes. The cradle is set in a convenient position in the vise and the stock set between the centers. A round piece of wood is made for the barrel channel; two wood screws fasten it in place. This is the forward center; the rear screw finds a place in the butt end of the stock. The two set screws should be tightened so that you are just able to turn the stock by hand, and so that there will be no vibration when the pressure of the tools is used. Figure 8, Volume II, illustrates an all-steel checkering frame and stand, one of the most improved cradles for this purpose. A full description of this accessory is given in Volume II.

With these preparations made, and with the sample test piece between the centers, begin checkering. Start from either the center or border line, and follow the border line, holding the tool on a slight angle so the first row of teeth will set well into the line. Continue this cut to the border, and as you push the tool forward in the border line, work it back and forth as you would a file to remove burrs from a thread, but advance about one to two inches each time and return to retrace the previous impression. Hold the handle in the palm of the hand and use the index finger as a guide on top. If the eye detects any running off from the straight line, let the tool follow the groove with the eyes directly behind the work so that it will be possible to keep your hands well in front of you. It is not necessary to make the grooves full depth at first; it will be much better, as a beginner, to make these lines only half the depth and then come back when the checkering has been gone over both ways, and finish to the full depth. As the border is neared, work very carefully and only come up to the edge of the line. Large borders are usually placed on checkering to cover up these runovers. The best checkering does not have any border except the one-line, ornate type which is beaded or carved.

Now go back to the starting point. You have three lines on the wood which the tool made; move over one line and leave the other two as guiding lines. While the outside row is cutting, the other two are following and finishing; when you become experienced you will be able to complete the grooves to the full depth and the file will have very little to finish. As the tool raises the dust from the wood, always keep it blown away by a sudden puff of breath, and when one or two lines are finished, remove the remaining dust with a heavy bristle toothbrush. Continue line after line until you have completely covered the design in one direction.

On completion, cut the cross lines the same way, using even greater care not to pull any of the diamonds out. After this is finished, begin over to deepen the lines until the diamonds are sharply pointed. Make every cut the full length of the lines. The forward end of the design where the checkering ends will be the forward V. These lines are dotted on the drawings, which means that they are to be finished later; or the lines terminate, and for that reason never work these in, but always let the checkering do that. If at any time you should work from the front, let the checkered lines terminate the rear V. When the two ends are laid out, the checkering never comes out just right, and you find yourself in a discouraging dilemma. It may be well then to practise straight lines such as Figure 91 shows.

The guiding of a checkering tool requires much practise. As advised before, slightly tilt the tool on the first line to follow the border line. After the first line is completed, keep the tool straight. As the tool is held in the palm of your hand and the index finger is on top of the tool, this should work in unison with the bone of the index finger and the elbow when the tool has a tendency to work to one side. These bones are not in a direct line with the lines on the design, and when the tool is so tilted and begins to ride the sides of the groove, it will be sure to jump over into the next line, a line which can never be brought back again.

The grain of the wood also has much to do with straight lines, and at times you will strike a soft spot which the tool will have a tendency to follow. Care and special attention must be paid to such conditions. American walnut is the most difficult to control in this respect. Foreign woods are the finest to checker, for they are very even in their fiber structure.

Having finished a sample of the design you are about to checker, it will be well to experiment on an

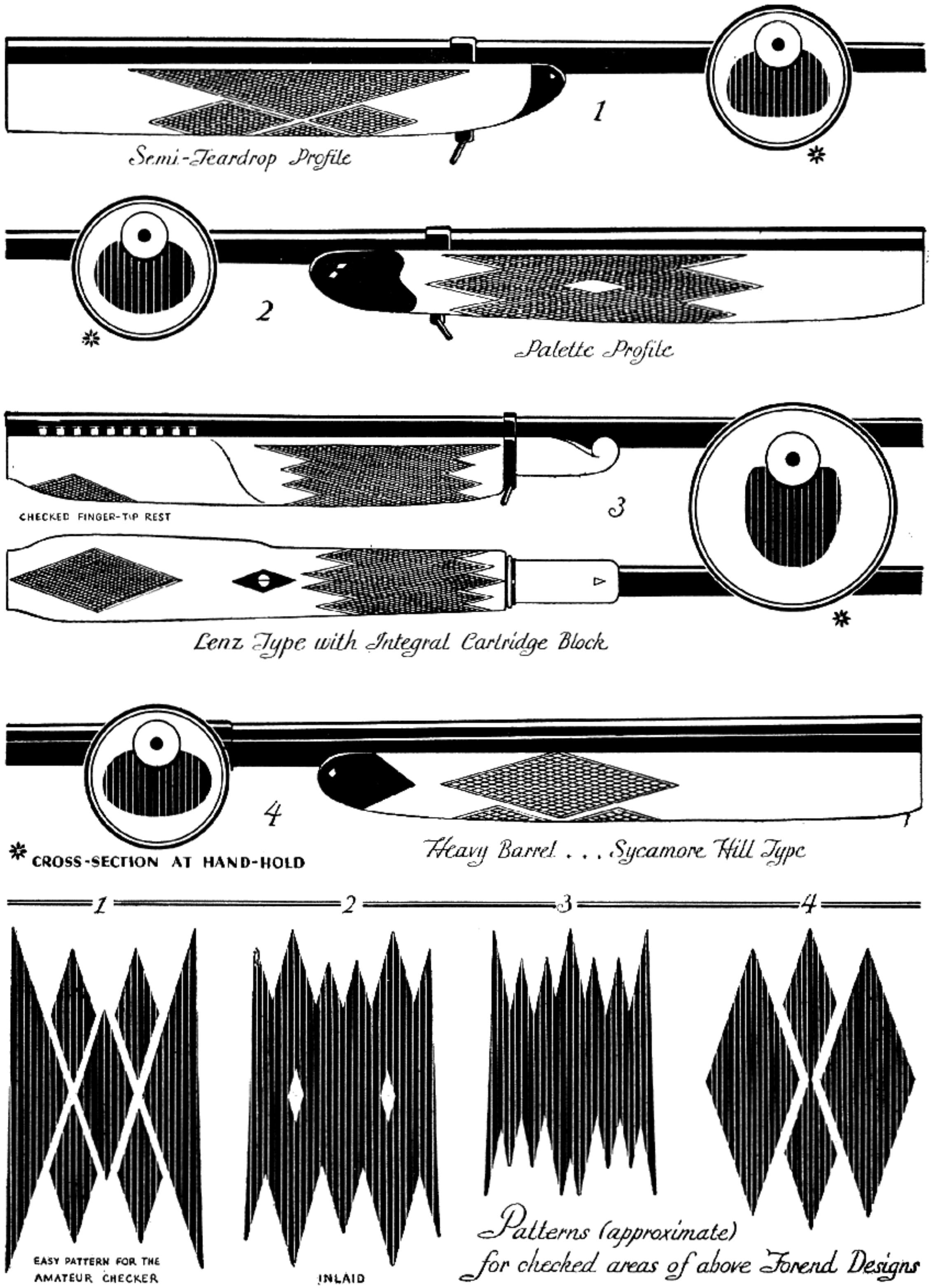

Fig. 91
Forearm checkering designs for single-shot rifles such as Winchester, Ballard, Stevens, etc.

old stock on which the checkering has been well worn off. Even if the diamonds are worn off you will still be able to find the outlines. Make a tool the same width and retrace the old lines, bringing them out sharp again and deepening the borders. If they have just the plain V on the ends, place a checkered center V out to the end. Always plan to put on a little more design if it is plain. Such practise will help you gain much valuable experience.

Checkering the Forearm — With the experience you have acquired on the sample piece, it will be comparatively easy to checker the new stock. Begin with the tool as before, continuing to the center. Now that you have become accustomed to the handling of the tool, do not become careless, but be meticulous in every move. Complete the lines in one direction, only passing over the surface to half the depth of the tool; then complete the cross check in the same manner.

I believe that it will be well to go into the proper performance of tools at this point. A hard wood requires tools with sharp cutting edges; not necessarily a keen edge, but just so the wood may be removed without tearing softer spots as in American walnut. Tools that are too sharp are just as detrimental as dull tools. Tools used for this wood alone will perform much better if the cutting edges are made with a burnishing effect to scrape instead of cut. To have a perfectly sharp checkering tool, keep a fine three-cornered oilstone handy to preserve the required cutting edge for the wood you are using. When the regular V-tool is used, both outside edges are cutting. This type of tool is more difficult to use at first, but after sufficient practise very good work can be done. The double-V tool does the best work, for it guides in two lines; while the outside line is cutting, the inside line is finishing. A set of checkering tools will last a number of years if the proper care is given them.

With the lines only impressed to half the depth and the tools stoned to suit the wood you are using, you may complete the cross checkering. Be very particular not to have the lines run narrow to the border and then die out, for this spoils a checkered stock. Straighten out the lines with the needle file.

You will experience considerable difficulty in the corners and close to the borders. Do not try to use the tool when you come to those places, but finish with the bent-needle file. On curved lines, do not come too close, but let the file do the finishing, for you can control this much better than with a tool.

Chapter I describes the methods used to bend the three-square needle file. If this is used with too much pressure, it will snap off at the end, so use it very gently as you file out the grooves, raising the diamond to a sharp point. File up to the border; this was neglected with the tool, so you must go back and forth in order to bring the diamonds up sharp. Keep the dust well brushed out, and if the wood has a fuzzy appearance, use No. 3/0 steel wool and brush over the checkering to remove this; then brush out with the toothbrush. It has often been recommended to use a little raw linseed oil when checkering; but never place any oil on the stock at this time, for then the tools will become clogged, especially the file. When it is necessary to use something to hold down the fuzzy appearance, use shellac lightly brushed into the checkering. If you have completed the filing and the checkering appears well defined, use a small piece of No. 3/0 steel wool, and gently brush out the entire design to make the diamonds look clean and sharp.

If you wish to have a border, go around the entire edge with the V-tool, and with a thin, wide, sharp chisel cut thin shavings on an angle to the checkering. Brush out with fine steel wool, and see if there have been any points overlooked. Finally, give the checkering a coat of raw linseed oil, working it in with a stiff-bristle toothbrush.

Checkering the Grip — There is one point which I failed to mention, and that is never to checker back of the tang of the receiver. Most men use the thumb over the grip, and a checkered surface will injure the skin when a number of shots are fired. It looks well but is entirely out of place, for this must essentially be a smooth surface. The border lines can follow the tang in about $\frac{1}{16}$ inch on both sides and then start down with a graceful curve. The under side of the grip is another place where checkering should never be unless it is a military stock, for you can never connect the lines from right to left; they have a tendency to change so greatly around the curve that they would come out round instead of lengthwise. Always carry the line from the edge of the trigger guard to the edge of the grip cap and then bring it in $\frac{1}{16}$ inch on both sides. The line which is drawn from this point just clears the tang of the guard or comes near enough for a border up to the tang, extending forward to a suitable length.

In checkering a pistol grip, the method of working the tools is similar to that used on the forearm, except, of course, that you will experience more difficulty than on the forearm because of the curves. The first lines to start are from the rear

of the cap to the receiver—lengthwise lines or lengthwise to the grip. The straight lines follow the stock lines or grain of the wood. Cut all the straight parallel lines back from the V; then cut three or four lines crosswise, and complete the straight parallel lines. Start the cross-lines after completing these. This is where the curved surfaces come in, and you will experience some difficulty in keeping the lines straight and in alinement because of the curve. At times it is only possible to cut three or four lines one way, especially when the lines come close to the grip cap. Change positions first in one direction and then in another. Keep the lines free of dust by blowing it out with your breath. After you have checkered for a while you will do this unconsciously. Watch the lines very closely, first from one direction and then the other, and constantly keep the tool lined up with the eye. Make due allowance for corrections and always keep the lines straight as they continue over the curved surface.

With the three-square needle file bring the diamonds up sharply as you did on the forearm. Use painstaking care on the border and in the sharp corners; bring them to very sharp points, and when completed go over the entire design very lightly with a small piece of No. 3/0 steel wool. This polishes the diamonds and makes them appear much sharper.

Cut out the border as you did on the forearm with the thin flat chisel. Finally, rub raw linseed oil into the checkering with the toothbrush, and allow it to soak into the wood; this will require about ten hours. Wipe off any surplus oil which may run over the surface. After ten hours, apply another light coat of oil—also on the forearm. Do not allow any of the oil to build up in the checkering, for it is rather difficult to remove when once hardened. Two or three coats of oil are sufficient. Then the final finishing takes place.

Border Design — A well designed border on checkering is a suggestion which adds the complete finishing touch to the sharp V-points. There are

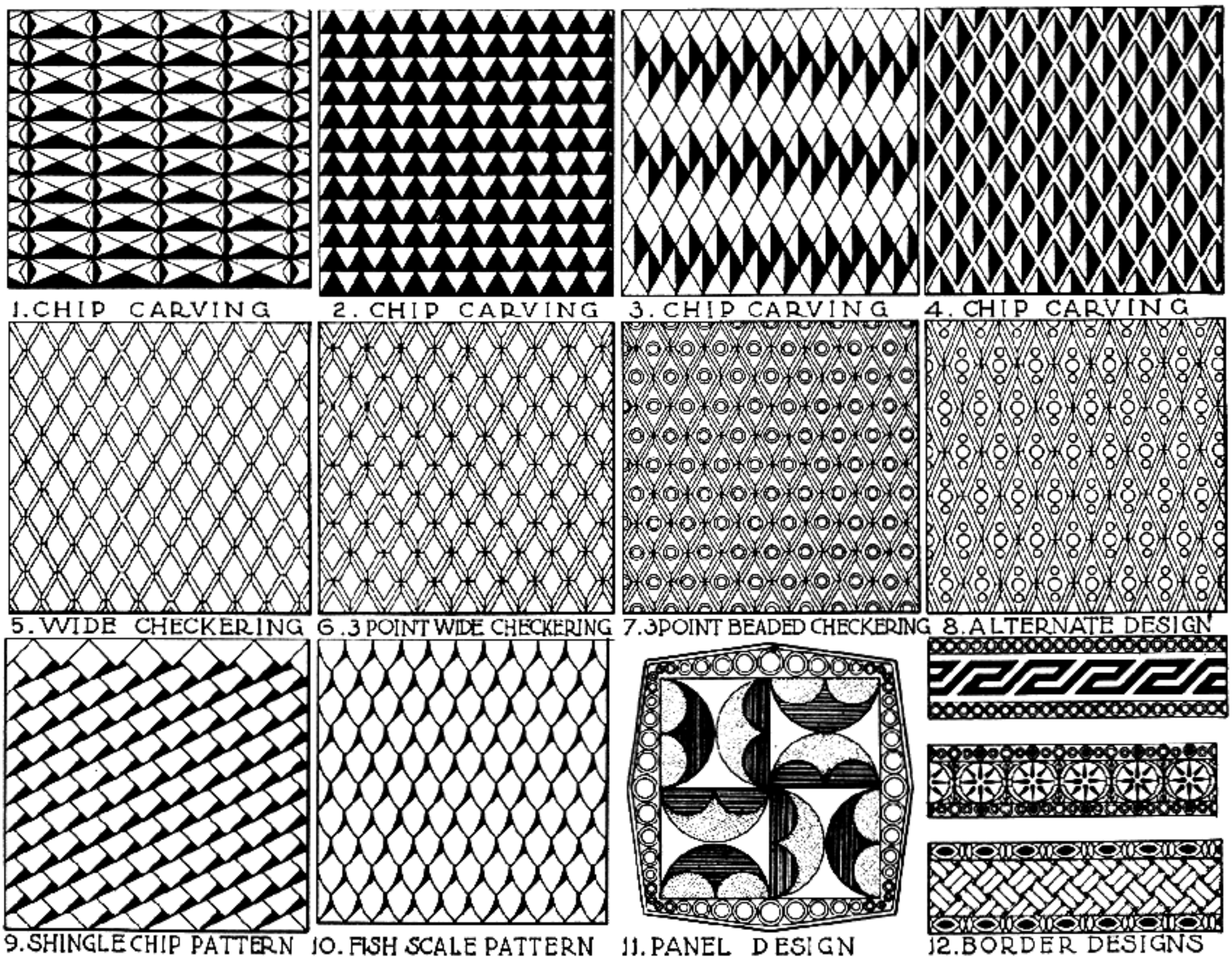

Fig. 92
Design suggestions for carving or checkering stocks

only two tools required for this work, the matting and round beading tools. Figure 92 will give the beginner various ideas for borders. The supply of designs may be worked out in various ways; they may be made very elaborate, far superior to carving on a gun stock, and more in keeping with a checkering design. Carving is a beautiful way of expressing artistic ability, but it is more or less overdone on some German arms. The beaded and matted borders are a form of design completely appropriate for checkering.

From among the designs we shall select No. 4 in Figure 89 for the forearm. The regular method of laying out the design is followed, except that we will allow for the wider border, which may be 1/16 inch or larger, according to the beading tool used; but no larger than 1/8 inch, for a beaded border which is any larger tends to throw the design out of all proportion. The smaller you can make the border, the neater the finish will appear.

The matted border along the V's on the front and rear of the checkering must not be any wider than 3/8 inch and no narrower than 3/16 inch. One-fourth inch is about right and shows up very well with the beaded border. This pattern, when added to the V on the pistol grip, should be followed out the same as on the forearm or it will throw the design out of balance. The matted border is given only in the front V, which you have followed on the forearm, but the beaded border is placed around the entire design.

The demonstration of such border designs on any stock will prove their object even among the most skeptical of critics, for it shows without a doubt that it completes something which is lacking on the checkering design. When a plain border is added, it lacks the finishing touches. It is far better to have only the one border line around the complete design, and at the extreme points use the 1/16 or 3/32 inch diameter beading tools to place one indentation, which is a circle. This looks as tho the points ended at a given distance instead of running out to a plain unfinished point. Figure 92 illustrates parts of borders. The student may practise on sample pieces to form some idea of what possibilities may be worked out to suit his fancies.

The borders should be laid out to the proper width with the dividers so that the lines will be an equal distance from the lay-out lines. With a flexible scale cutting the centers of the dividers' marks, draw a line parallel with the laid-out V, using a soft lead pencil; then either file or cut these in with the starting tool. The double parallel lines may be matted after all checkering is completed. Figures 93 and 139 illustrate these tools.

The matting tools for wood are a little different from those for steel. When filing their points, file rather deeply and not as closely together, bringing the points up very sharp; when completed, the tools look as tho a series of needles had been set in the top. Two tools are made on a square, rather large, and one is pointed on each end in order to

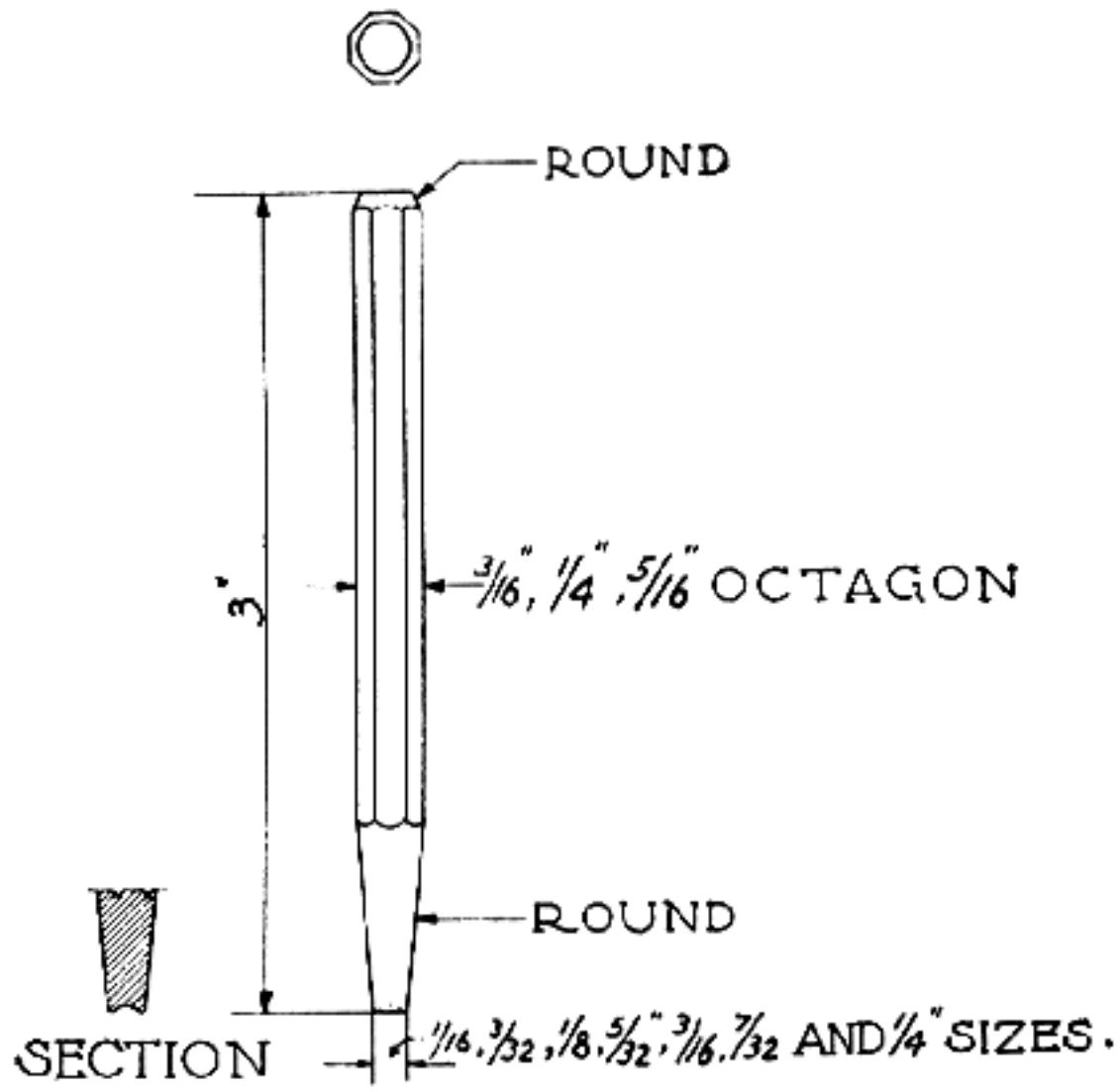

Fig. 93
Beading punch for border designs, etc.

make the extremely sharp V's or corners. While making the matting tools, you may also turn up the beading tools, which are turned from drill rod. The extreme end of the angle is the diameter of the tool and the cupped-out center must be very shallow but on a true radius. They are tapped slightly with the hammer, and the bead which is formed in the wood comes even with the surface; the outside edges slightly cut the wood, and make a clean, sharp, round mark.

Harden both the matting and beading tools and draw the temper to a dark blue. When using the matting tool, it is held in the left hand between the thumb and index finger, the little finger resting on the stock. Keep the tool off the surface about one-fourth inch. Tap the tool with short, fast, sudden blows. The spring effect given by the little finger keeps the tool away from the work, and the index finger and thumb are used not only to hold this tool, but to give it a slight turn, first in one direction and then in the other. Move over a considerable amount of surface at one time, and then go back over the same section until you have a well matted surface. Wood treated in this manner appears polished in spots, and the matted parts are very dark, a condition caused by the fine serrations of the needle-like points of the matting tool.

Fig. 94
Julia Thornely checkering the pistol grip of a finished stock. She is now a grandmother of 68 years, and has been in the employment of the Remington Arms Company for 53 years

Unless the beading tool is tapped very lightly, it will go too deep below the surface. When beads follow each other in rotation, they should connect and not overlap; therefore, when forming chains of beads, always work the tool away from you so that you can see the edge at all times and can be positive that the tool always passes the edge of the bead just made. With the beading tools in steps, you may use the largest one and so on down until you have a chain. Start again with the large one and continue to the smallest, or you may use the largest one three times and the next the same until the smallest is used, in a series of threes. There are such a number of border designs that I could continue with an endless chain of suggestions. They are very simple to work out, and the student can pass many hours decorating sample pieces of wood, either hard or soft, until he becomes accustomed to the methods.

Checkered Butt Plates and Caps — Checkering on butt plates and pistol-grip caps forms an added attraction and is a utility as well—on butt plates; pistol-grip caps are much better if left plain, tho the taste of checkering is often carried to such parts. Figure 95 illustrates checkering designs on butt plates and pistol-grip caps. The butt plates shown can be made either of buffalo horn or of steel. Some designs may be checkered in the wood itself; others can have a skeleton plate fitted and checkering placed on the exposed wood. This type of plate looks very well and may be used if recoil is not too severe. Checkering placed on the buffalo-horn plates can often be carried out in other designs than those shown here—also upon steel plates. These designs will give the reader suggestions for his own particular taste which he may change if he has a better understanding of scrolls and geometrical figures. The checkering shown on the pistol-grip caps may be used on specially-made buffalo-horn caps. It can also be placed on metal caps with a vertical attachment set upon the milling machine and the cap fastened on the rotary attachment or in the vise. By setting

the vertical lead at a 45-degree angle and using a small end mill, perfect checkering will be produced.

Matted Surface in Place of Checkering— This method of placing a rough surface on the forearm and pistol grip is a very satisfactory way of eliminating a lot of extra work, and is, of course, more rapid than checkering. There is a considerable amount of surface to cover with the small matting tool, but as you will do this in sections it is surprizing how short a time it takes.

Lay out for the border as previously described. If you are using a plain border or just the original lay-out lines, mat up to these lines, and if you wish a beaded border, make provision for it. The beaded borders make a very artistic finish for the matted surface. When you lay these designs out of paper, choose a pattern which will be in keeping with the matted surface. This class of work is better for the student to practise on at first than checkering, for it is very simple to apply to any stock.

If you should own a factory arm of any description, you can use this method in place of checkering, constructing a border in keeping with the general outlines of the stock. Nearly all factory arms are void of checkering; with a shellac finish it is possible to file out the borders and mat over the shellac surface very lightly, pounding it into the wood. When completed, apply a coat of raw linseed oil to darken the space that was worked on. The contrast between matting and shellac counteracts the plain appearance of the gun and produces a novel effect. Refer to Figure 103 for the effect of matting.

Carving— This branch of the gunmaker's trade is seldom used except in the rare cases when a customer wishes such work. The leaf, flower, animal, Gothic, or any nature-study design applied to a stock seems rather inappropriate. The plain chip design such as Figure 92 shows is more in keeping with a well designed stock but is rather difficult to execute. In the past, I have had two wood carvers work for me; I was greatly interested in their ingenuity and artistic ability, and particularly in their complete sets of carving chisels and other tools in their possession.

I shall presume that the student is anxious to learn this branch of decoration, and make practical use of it, not only on gun stocks, but on other wood work. The first consideration will be to procure a set of carvers' tools, which consist for the most part of chisels and gouges of different shapes and sizes. The number required may be from six to forty or fifty for the more intricate designs. Chisels and gouges are to be had from $\frac{1}{16}$ to 1 inch wide with curves or "sweeps" in sizes graduated from a semicircle to a curve which is almost flat.

The beginner, however, need not possess more than from twelve to twenty-four and may make a start with even fewer. It is far better to learn to use a few tools before purchasing a full set. A tool of a known description is sought for and purchased with a knowledge of its advantage until the complete set is obtained. I would suggest that you study the J. B. Addis & Sons catalog for a very good selection. A description of all the different kinds would fill a large chapter.

Along with the tools you should procure a set of fine stones to keep the chisels and gouges to a razor edge. As Chapter I contains all this information, I shall assume that the student has already taken care of such a selection of stones. These tools are like all other wood-working tools when first purchased: they are ground but not honed or stropped.

If the beginner, through lack of opportunities for practise, does not wish to spoil a new stock, I would suggest that he find encouragement in the fact that he can never exhaust the interest afforded by this art in its infinite suggestion to the imagination and fancy. He may reasonably hope to gain enough experience with the tools to enable him to execute with his hands every idea which has a definite existence in his mind. Thus, in time the student may gradually work out for himself a natural and reliable method of expressing his thoughts. The scope of experience is very limited on stock work, but other fields are open to such work. There is in this direction a life's work for any student who aims at finding the bearings of his own gift; at the same time he can keep himself free to follow out the gun work which his thoughts dictate. As a suggestion, practise on Figure 96.

The first step is to lay out your design on transfer paper and pencil it into the wood. If you should be working on the forearm, measure the rounded surface with a tape, both front and rear, in the space you wish the design to occupy; then subtract for the border on each side. Lay out the design on the transfer paper and place it in position, first chalking the surface of the wood and then penciling the design in.

The first surprize which awaits the beginner and one which will open his eyes to a whole series of restraints in the freedom of his operations, lies in the discovery that wood has a decided grain fiber. You experienced this to some extent before, but now it comes in a very different manner, for you are only removing shallow cuts and your tools do

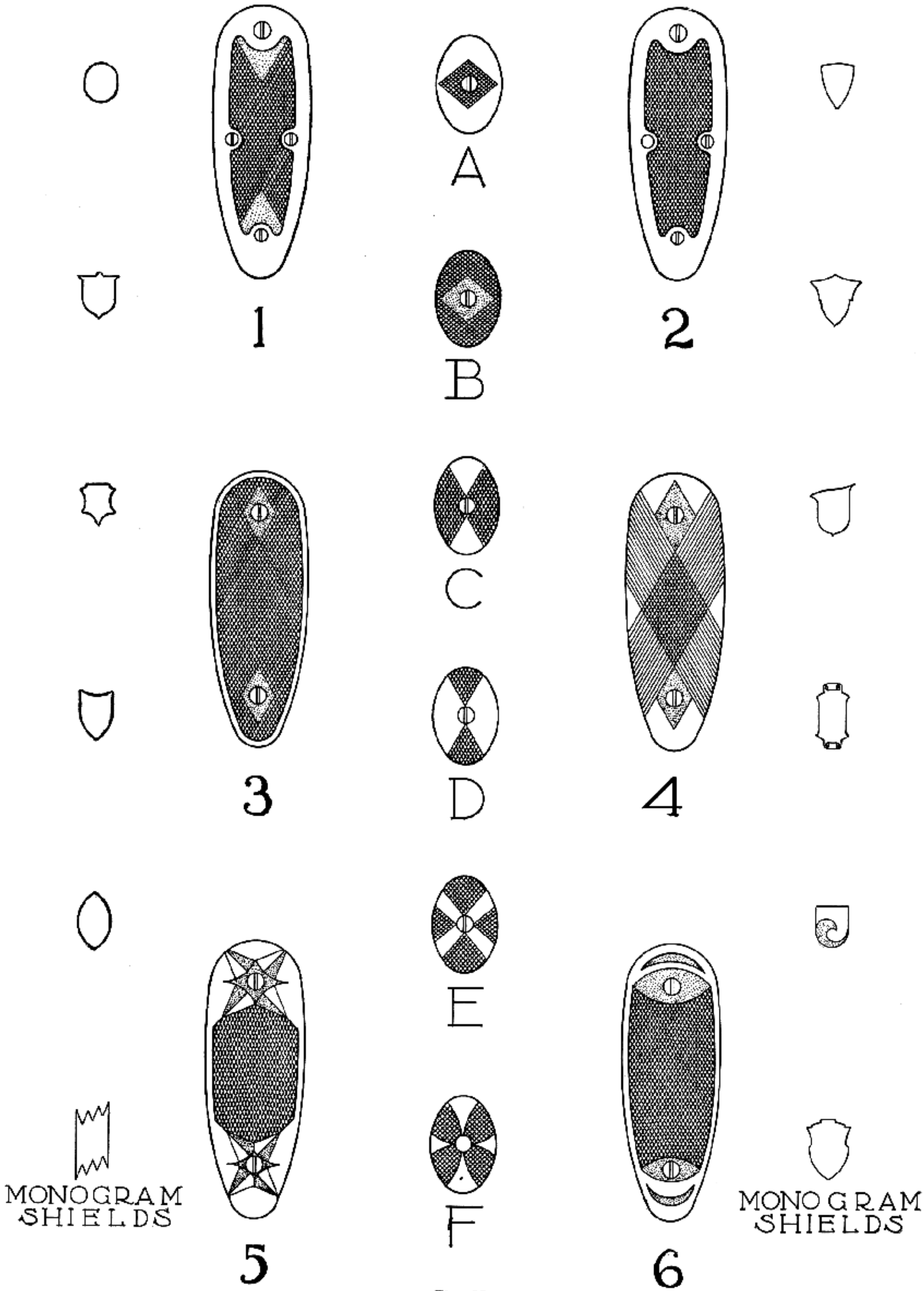

Fig. 95
Design suggestions for checkering butt plates and pistol-grip caps. Monogram or shield designs

not seem to be handled as you had pictured in the design. Even tho your tools are sharp, they will refuse to cut straight here, chipping off the wood, and by the time the piece is about finished and you are able to know the grain or fiber of the wood, a good many cut-outs are placed where they should never have been.

Suppose you have selected No. 1 in Figure 92 for your carving. It is very much like a checkering design. This is a test of endurance, and as an experimental effect with carving tools, repeat the same-shaped diamonds until you have filled the entire space of the lay-out you have made for the forearm. All this work is done with thin flat chisels; by the time you have completed it, you will begin to understand and appreciate one of the fundamental qualities which go toward the making of a carver, namely, patience. You will have produced a thing which may give you pleasant surprizes and elicit very natural admiration from your friends.

By the time you have completed the forearm you may have changed your mind about the pistol grip; however, you must carry out the same design, so your patience will be doubly tested. Patterns such as these can be drawn and laid out on your stock instead of using the transfer paper, but when using a leaf pattern or any other form of nature design, you will notice in carving pattern No. 1 that the corner of your chisel will do most of the work. At the same time, it will suit the different angles at the bottom of the holes. Each chip should come out with a clean cut; but to insure this, the downward cuts should be made first, forming the raised diagonal lines.

When you have successfully carved this pattern, Nos. 2, 3, and 4 may be done also. Introduce a very moderate amount of variety by using these on different stocks, and incorporate leafage or something of a nature that will be appropriate for a stock. When the student wishes to go further in the subject of carving, he should secure books on this subject, for I have only touched the surface as applied to a gun stock. Wood carving is a fascinating and interesting form of art, but a little out of place on a gun stock unless properly restrained.

Inlays, Shields, and Ovals — In the past two hundred years, various forms of ornamentation have been placed on stocks wherever the notion suggested; some on the sides of the butt stock, some on the sides of the pistol grip, and others back of the tang, along the sides and underneath the forearm. Today we have different conceptions of artistic requirements; we follow out lines of simplicity, and do not observe the old tradition of misplaced artistic temperament. Not that we do not have this among us today—some of the so-called greatest creations of present-day art are a disgrace to modern civilization.

Inlays form a means of further adding individual expression to a stock, provided they are so placed that they will not conflict with the general outlines of the design. Shields and ovals have only one purpose—that of the owner's monogram or initials—and should only be placed either on the bottom of the stock, half-way between the pistol-grip cap and toe or about 1½ to 2 inches from the heel on the top of the stock.

The only metals which these should be made of are gold or silver. Gold should be between ten and fourteen carat, and pure silver about .04 inch in thickness. Figure 95 illustrates different shapes and forms of these to be made up and then formed to the contour of the stock at the place in which they are to be located. Two long tacks are soldered to the back about ⅛ inch from the top and bottom and are used to anchor the shields or ovals into place. Glue is used for this purpose when they are fitted into place. When fitting in a monogram plate, first straighten out the tack from the body and place it over the spot where you wish to insert it. Gently press the points into the wood and with a ⅛-inch drill bore two holes just the depth of these tacks.

Set the shield in place and with a sharp scriber mark a line around the outside and carve this out. Great care must be exercised so that there will be no openings between the wood and metal; it should be only deep enough so that it will stand up above the wood about .005, which allows enough to be filed and polished down to the surface of the stock. The very narrow carvers' chisels are used to set these in place, and lampblack is used to secure the bearing surfaces so that you will not take any more wood out than necessary. When it is down in place wipe off all the lampblack and with pliers turn a small hook up on the end of the tack and glue in place with heavy hot glue. Place a clamp over the shield or oval and let it stand for twenty-four hours.

Before clamping, carve out a piece of wood of the same contour as the shield and stock, for if you should only use a piece of flat wood for this purpose, you are liable to have a flat spot on the top of the shield which can never be removed. When it is polished and the stock is completely oiled, you may have your local jeweler engrave your monogram or initials in the metal very artistically.

Inlays are so placed that they will counteract the plain appearance of a gun stock according to

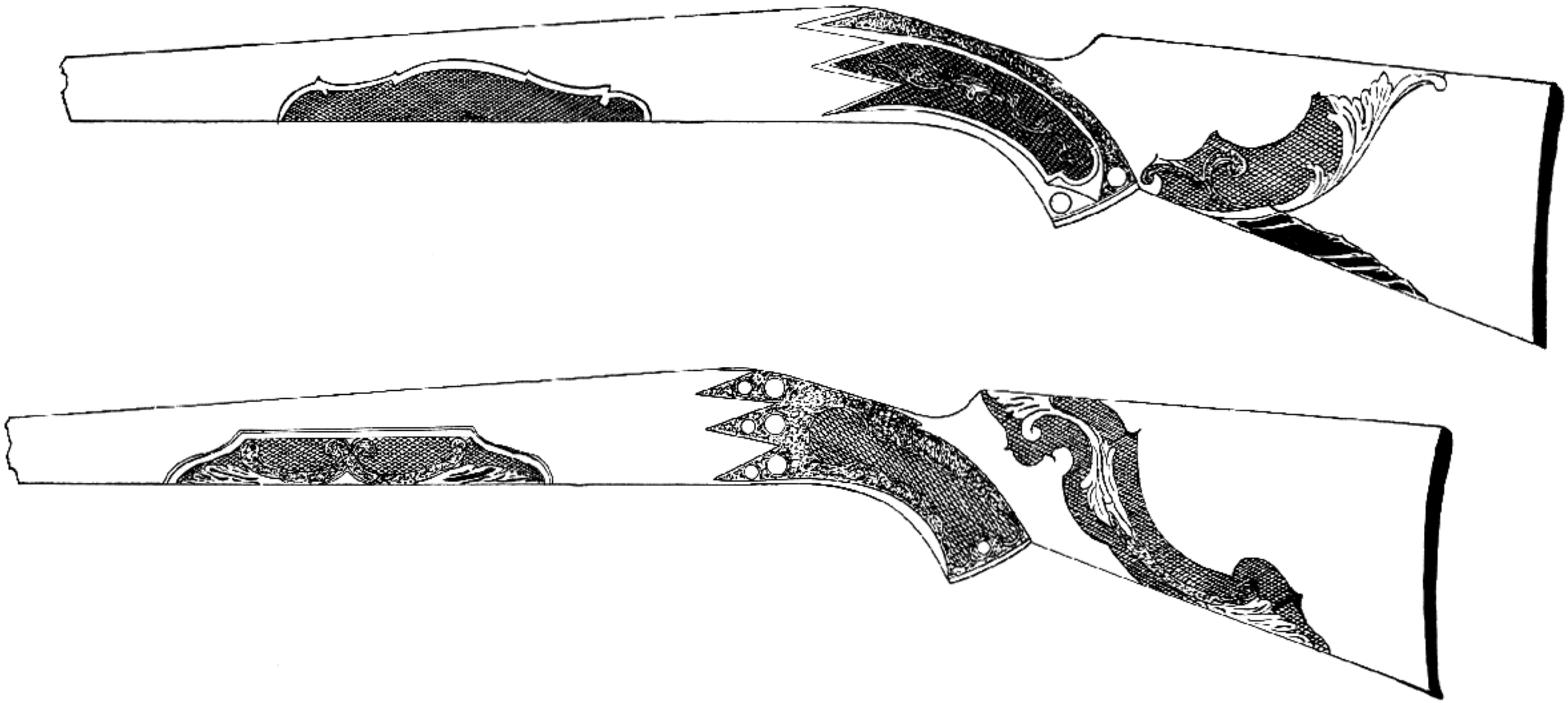

Fig. 96
Design suggestions for carving gun stocks

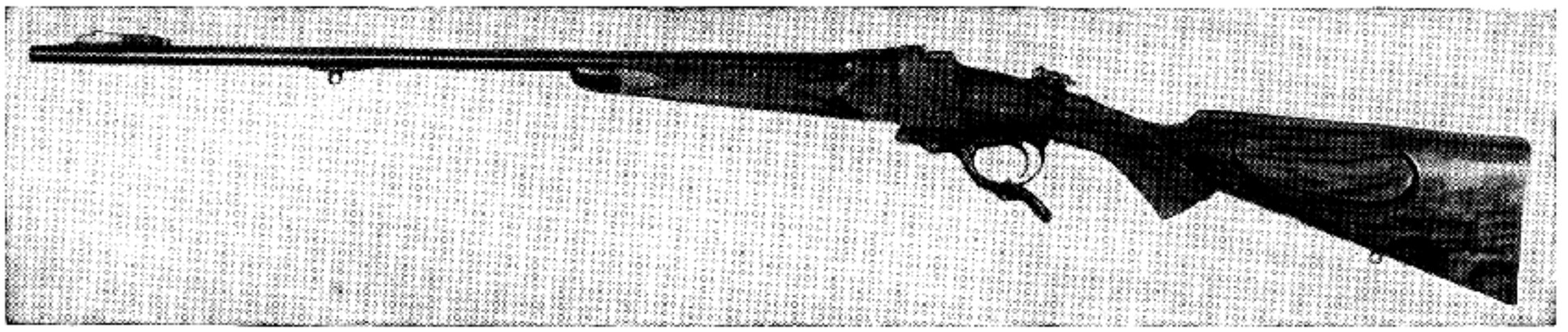

Fig. 97
Caliber .22 "Hornet" rifle made by Westley Richards of Birmingham, England. A fine example of the gunmaker's art

the taste or fancy of the owner. This type of ornamentation is by no means of modern origin; its development may be traced to a source in our early history of arms, in which we see very elaborate inlays of gold, silver, and ivory on arms of the nobility. This form of decoration is interesting and beautiful; however, we must carry out such art in a modern way, critically and with modern tools. It is a form of art which demands little save precision and patient application. There are only three materials available which may be used appropriately: ivory, buffalo horn, or ebony. The contrast of ivory offset with either buffalo horn or ebony is very attractive and softens the glare of the plain white ivory against the wood.

Another form of inlay is obtained with burls or knots taken from beautiful wood such as Circassian mahogany, Satinee, Italian and American walnut, yew, etc. They should be cut out to run true to the grain of the wood, and as nature never forms things in straight lines cut out your patterns as Figure 98 illustrates.

The main object of cutting these out in such forms is that when they are fitted into the surface of the wood you are less able to detect where they have been placed. They should be cut out so that the nature of growth in the tree is on an uneven line following lines of nature. An inlay in the form of a square, oblong, or diamond is very obvious, but this type deceives the eye, even tho you place a dozen of such inlays on one side of the stock. To inlay these knots or burls successfully, cut them out, allowing a slight taper to the piece. Lay one over the section in which you wish to insert it, and with a sharp scriber, mark the entire outline. Remove the center with a Forstner bit to a depth between ¼ and ⅜ inch and remove the wood up to these lines, using the small carving chisels. Care and precision must be used to cut out every sharp corner.

Continue to try the inlay until it will just enter; then remove the wood on the sides so that the inlay is about ⅛ inch from the bottom, which will allow enough for a driving fit to the bottom, and the slight taper will completely fill and wedge the inlay to the sides when glued. After the inlay is fitted, glue and clamp in place, and let stand for twenty-four hours. Finish flush with the surface of the stock, and if well done it will be difficult, even for yourself, to see where it has been placed.

You have already discovered by practise that wood has a grain which sets bounds to the possibilities of technique. You have yet to learn that it has also an inordinate capacity for swallowing light. Now, as it is by the aid of light that we see the results of our labor, it follows that we should do everything in our power to take full advantage of that helpful agency. When setting in an inlay, place it in such a position that light will have the proper effect.

It is obvious that work on the proper inlays, applied to the proper place, when it cannot be seen is only so much labor thrown away. There is approximately a slight relative distance from which to view and determine the location of these inlays, aside from the fact that one may be used to fill a bad spot or may be so located as to add beauty to a piece of wood lacking in that respect. But what, you will say, has all this to do with copying the infinite variety of nature's details? Surely it cannot be wrong to imitate what is really beautiful in itself. You will find the best answer to this in the technical difficulties of your task. I have only laid out six of these odd forms, but you can lay out a hundred and yet never use the same one.

Figure 99 illustrates twelve modern designs of inlays, using ivory, ebony, or buffalo horn, which forms a contrasting color of black and white. We have in this discovery a clue to the meaning of the word "conventional"; it means that a particular method has been "agreed upon" as the best fitted for its purpose, for inlays in stock design. Not that experience had really anything to do with the invention of this method. Strange to say, my earliest efforts in placing these inlays were based upon a diamond, so temptation arose to see the effects of ivory on the outside and ebony or buffalo

horn for the inside. The results were very pleasing. Temptation arose in various directions, and I experimented further with various designs and effects. I have only given twelve, but the student may lay out an endless number to suit his fancies. The sizes of these may be varied to suit any condition.

No. 1 in Figure 99 is the plain ivory which is generally placed half way in a buffalo-horn fore-end tip and the wood. One may be placed on each side or just one on the bottom. The addition of the ivory in the buffalo horn produces a very pleasing effect. No. 11 is the diamond which is placed in the forearm at the proper location for the sling-swivel eye to go through; ivory is again used. Nos. 2, 3, 5, 6, 7, 10, and 12 are used for the under side of the butt stock. No. 7, 8, 10, or 12 is always set half-way between the pistol-grip cap and the toe; No. 2, 3, 5, or 6 may be placed back of the pistol-grip cap, making a very pleasing effect, as these always have the ivory on the outside and either buffalo horn or ebony for the centers. Nos. 4 and 9 are often used in the centers of the checkering design on the forearm at the bottom.

No. 4 may be used on each side of the forearm if much checkering is used, but No. 9 is always

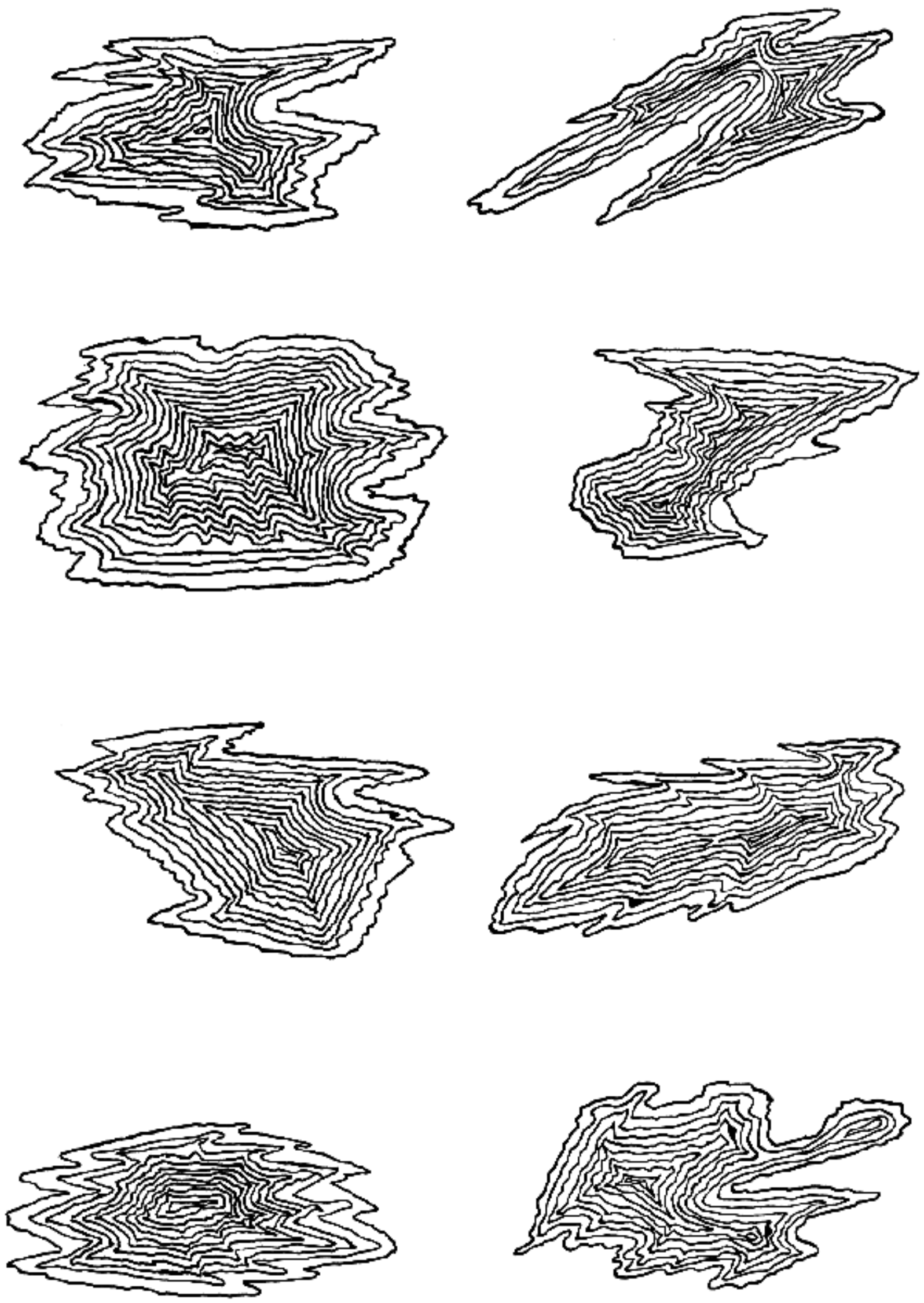

Fig. 98
Typical method of cutting out patches for insertions in wood where bad places occur

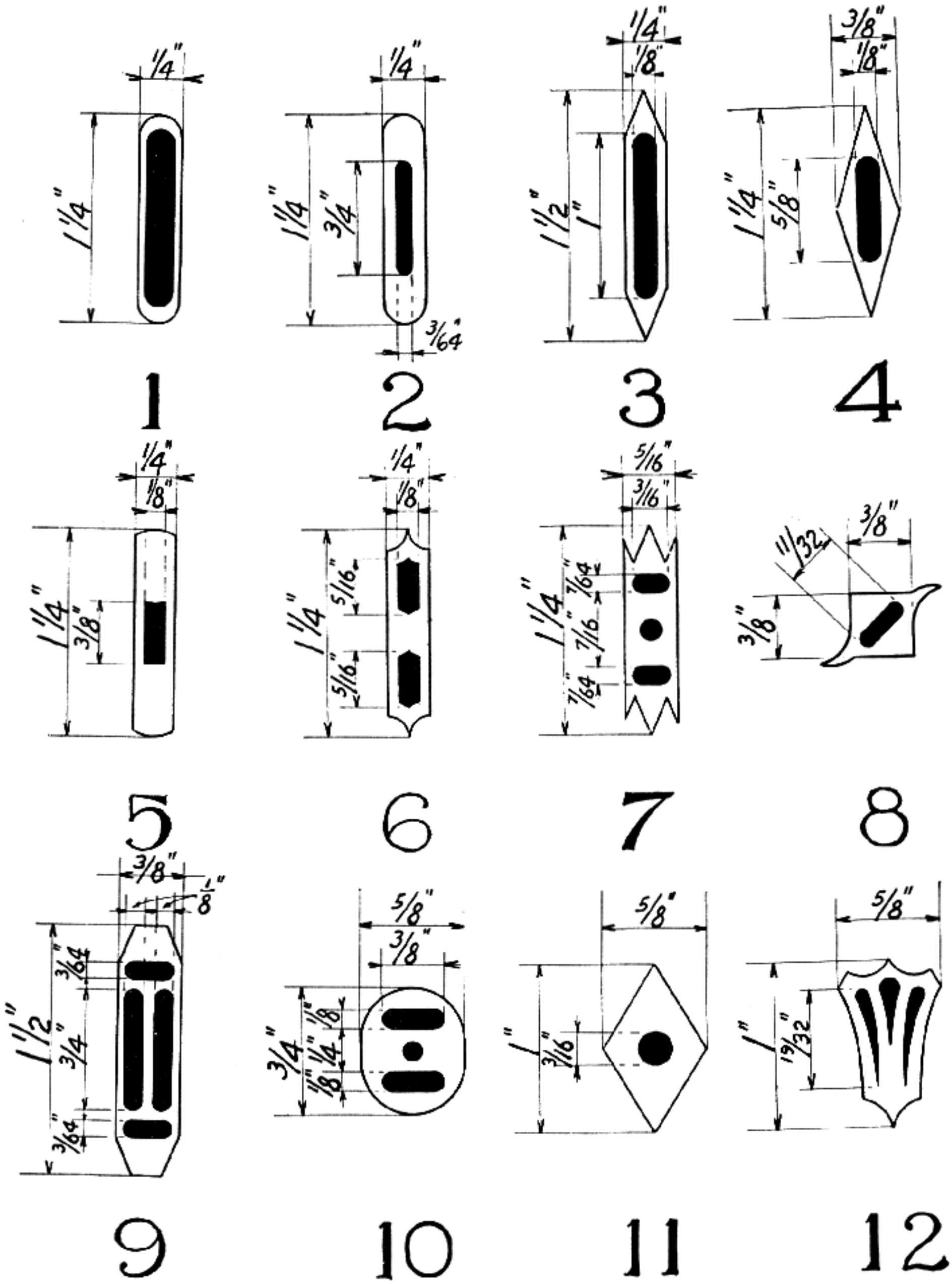

Fig. 99
Design suggestions for inlays in gun stocks

used in the center at the bottom. No. 8 may be placed about 1½ inches back from the heel on the top of the stock, which offsets the plain appearance between the heel and comb. Round ivory plugs are often used in the buffalo-horn tip on the end and are placed in at an angle of 45 degrees. The end rounded at the bottom adds just enough difference to the horn to make it pleasing to the eye when placed in a gun cabinet.

When setting in the oblong inlays, the cut-outs are always made first in the stock either on a drill press or milling machine. Chapter IV describes some details of the set-ups for this work and also how to cut out the centers. The unusually formed inlays are always made first, laid on the stock, marked off with a scriber, and then set in. Use as much care as you did with the natural inlays, cutting out the wood in the neighborhood of a

delicate passage. Take time to cut the wood out mouse-like in small fragments. The depth of all these inlays should be about ¼ inch. Always make them with a slight taper so that when they are clamped in place the edges will have a perfect joint between the wood and inlay.

The center sections are made on a slight taper and placed in at a depth of 1/16 inch from the bottom, so when milling these centers always leave a thin wall at the bottom to give the outside strength; then they will not split or crack when clamped in place. When these inlays are completely fitted, glue the center sections together with the outside in place, and clamp. Let stand for twenty-four hours, then finish flush with the surface of the stock.

Inlays should be placed in a stock after the first or second sanding takes place; after they are cut down to the surface, they are finished off just as you have done other finishing operations.

Throughout this chapter I have placed before the student ideas to work to from the checkering and borders to the inlays. As you know, the human imagination loves surprizes and never wholly forgives the artist who fails to administer a pleasant shock. I have invited you to come forward and execute or duplicate this same work in order to see what a pleasant shock is in store for your own imagination. You will probably be able to elaborate upon my ideas, for I have only laid the foundation. I do not encourage the copying of inlays or even some of the medieval designs to be seen on very old arms simply because they appeal to you. We must remember that these designs are symbolic of their time just as voluminous skirts and powdered wigs were.

After you have completed one or two stocks and thoroughly understand and appreciate the value of decoration, when designing any future details, arrange every subject with a view to reflecting your design as much as possible.

The chapter from the selection of woods to this must be understood very thoroughly, for as yet you have not begun to feel the extraordinary difficulty of making up your mind to just what you want in a gun stock. Meantime, I do not want you to run away with the impression that when you have mastered the principles of stocks and their design, all is learned. Until you have completed all that is necessary in order to turn out stock after stock with the ease of a laborer throwing shovel after shovel full of earth from a sand bank, you will find by experience, I think, that stock making has great possibilities and hard set rules. You may be counseled as to the best and most practical mode of expressing your ideas, but those thoughts and inventions must come from yourself if they are to be worth having.

CHAPTER XIV

Stock Surgery

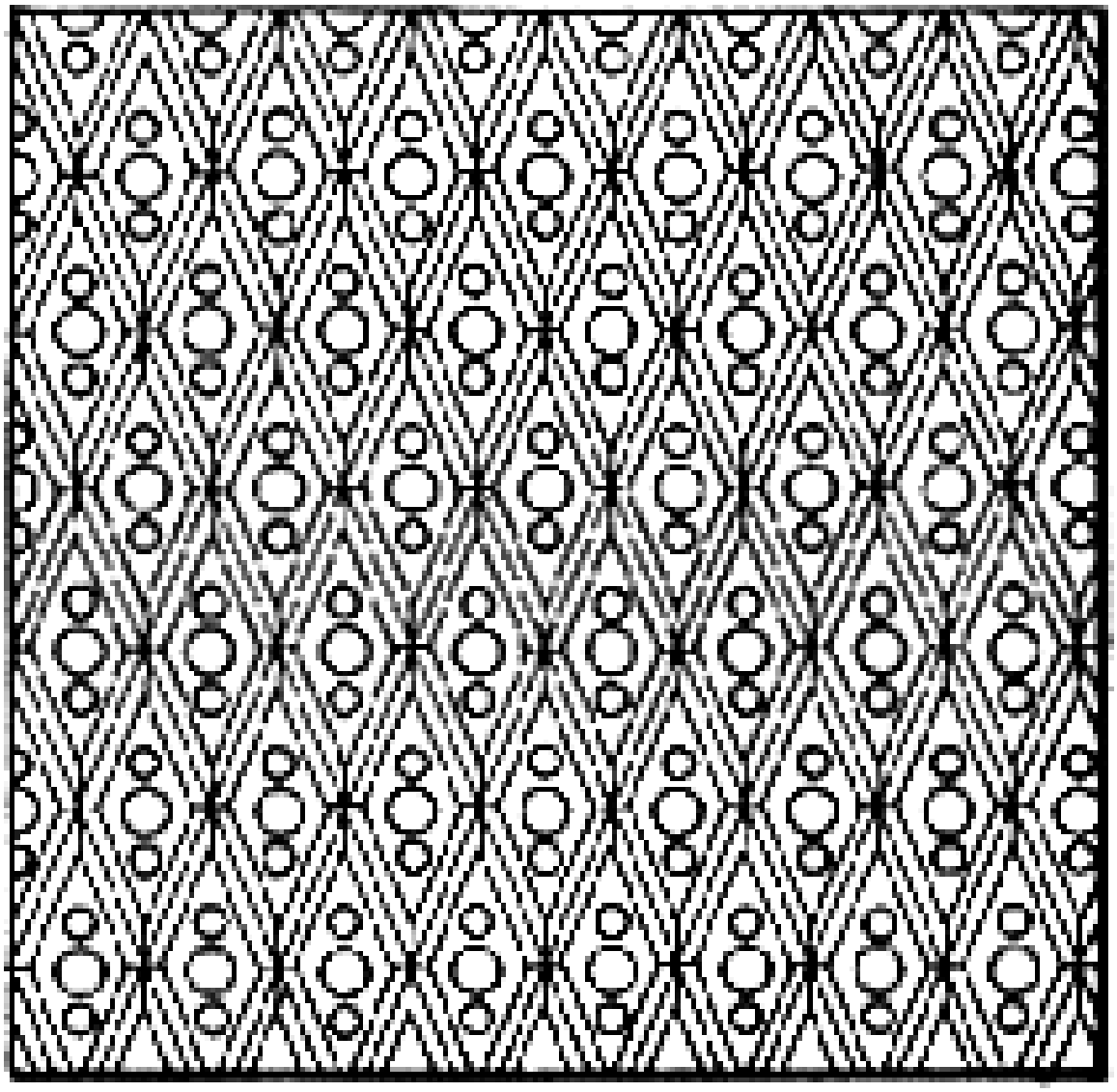

CHAPTER XIV

Stock Surgery

NO DOUBT the very ambitious amateur will wish to accomplish the more advanced work of a complete new stock, and this he can do from the fine outlines seen in photographs of some of the custom-made arms of British gunmakers or of our best workmen over here. One must hesitate at restocking a rifle or a shotgun until he has gained the necessary experience in the use of tools. He will then have the requisite confidence in himself. The remodeling of some of the old military arms such as the 45-70 model of 1873, the Krag models of 1894, 1896, or 1898, the present Springfield model 1903 or Enfield model 1917 in military and sporting stocks will furnish you with a means of acquiring that experience. Most factory stocks are good subjects to work over to your own ideas of stock design and fit. There are also many shotguns which do not come up to expectations; perhaps you own such a one. The raising of the comb, the lengthening or shortening of the stock, and alteration on the forearm will provide excellent practise with tools, and the improved handling and appearance will surprize you, not only by what you have accomplished but by the new ideas it has brought to your mind.

The Sporter — The Springfield "Sporter" model 1903 is an example of a stock which can be shaped up to much more graceful outlines. In fact the stock is purposely made unduly oversize so that it may be reduced proportionately. The Springfield .22 caliber has the same stock as the caliber .30 "Sporter," so you have two different rifles amenable to the same improvement. If you should, in experimentation, happen to spoil one of these stocks, you can obtain another from the D. C. M. for five dollars.

The first thing to do in this remodeling is to remove all metal parts: the barrel and action, butt plate, and rear sling swivel. To use a rubber recoil pad, buffalo-horn butt plate, or light steel butt plate, plug the present screw holes by fitting therein round wooden plugs and gluing them in place. I always fit a black walnut patch in the swivel cut-out and match the wood in color and grain as nearly as possible. I then use a standard stock-swivel bow in its place; this looks far better than the military Springfield swivel. Fit the piece of walnut very closely and it will hardly be perceptible when completed. While the glue is hot, remove the small keeper pin in front of the front swivel, cut two small wooden plugs for this hole, and glue these in. These plugs will be cut, not with the grain of the wood, but crosswise, and inserted grain with grain.

The two stock reinforcing bolts can also be removed and both sides counterbored to a larger diameter and from $\frac{1}{8}$ to $\frac{5}{32}$ inch deeper. The same amount will have to be cut from the end of the screw, the ends re-threaded and placed back into position. Walnut plugs can then be glued in place over the bolt head and nut. This operation does away with the unsightly appearance of the metal on the sides of the stock. When all the gluing is completed, fit the new pistol-grip cap. The cap can be made of aluminum, bronze, buffalo horn, ivory, red or black fiber, or any other attractive material. Buffalo horn is the best of all. After the cap is fitted close to the front edge of the pistol grip and screwed up tightly, fit whatever butt plate you wish. The present butt plate on the rifle is far too heavy. Your main object will be to cut down all excessive weight whenever possible. I find that a buffalo-horn butt plate is much better in appearance, and being light it will enable you, by varying the thickness, to make the stock to the proper length.

When fitting the butt plate, the pitch or angle of butt to the horizontal of the gun must be taken into consideration. If you are a heavy-set person with a full chest, you will require considerable pitch. We had best designate this by the amount the front sight recedes from a vertical plane when the gun stands on its butt. This, in your case, would be from 4 to 7 inches. For a thin person the pitch as received, of 3 to $3\frac{1}{2}$ inches, is correct. When fitting the butt plate you can also get a little cast-off or swing to right in the stock—$\frac{1}{8}$ inch will be enough.

A recoil pad will be a great help to those who are at all sensitive to recoil and to anyone who uses a rifle in a hot climate, where one frequently

shoots without a coat. There are two objections to rubber recoil pads; they add weight, and they sometimes prevent quick aiming by clinging to the coat. If you cover the face with finely finished leather, and cement this securely in place, it will eliminate the friction of the rubber. A recoil pad is the neatest means of increasing stock length, providing you are not above the average in height and length of arm. It is very seldom necessary to lengthen the sporting stock by gluing a piece to the end together with a recoil pad. When the recoil pad is placed on a sporting Springfield stock it lengthens it to about 14½ inches. This length, when you take into consideration your hunting coat, is too long for comfortable shooting. A little too short rather than a little too long is a good rule to follow.

The drop from line of sight on the "Sporter" stock is just about right for the average person, and it is never necessary to build up the comb or heel. However, you can give the stock more drop by extending the toe and gluing a piece of walnut from the pistol grip to the butt plate. This makes it possible to drop the butt and still hold the length of butt plate to 5⅛ inches.

After this important work is completed you may proceed to shape the stock to new outlines. If a rubber recoil pad has been used, sand it down until you have removed at least 1/16 inch from each side of the butt stock. The same should be done with a buffalo-horn butt plate and with the shotgun type of butt plate. You have too much wood and it must be reduced to the size of the butt plate.

The spoke-shave will now come into play to remove the surplus wood on the stock along the sides of the action and around pistol grip and forearm. As to the end of the forearm you may either round this up to the barrel as the British gunmakers do or work a "schnabel" on the end similar to some of the factory stocks. Make the undercuts at the comb, similar to some of the better shotgun stocks, if you so desire. This will also give better lines to the hand-hold and a better place for one's right thumb.

After the stock is completed the next step is to get proper balance. This consists of boring out the butt stock in order to reduce or add weight. Boring out the butt stock must be done with care, using a wood bit small enough not to come to the surface as the stock area gets smaller. A series of three or four holes may be bored and you will be surprized to see what an amount of wood can be removed reducing the weight and bringing the rifle into better balance.

The stock will now be ready for smoothing and polishing. I refer you to Chapter XII for a complete description of these processes. Well placed and executed checkering will complete the work.

Krag and Springfield Service Stocks — An example of attaching combs and pistol grips on a Krag stock is shown in Figure 100. Since we have mentioned the Krag or Model 1898 Springfield rifle we will describe in detail the course of work required to put a service stock in the same class as a sporting stock, completed with pistol grip and raised comb. The Springfield model 1903 service and the Krag are alike in the butt stock, so whatever work is intended on the Springfield may be duplicated on the Krag. There are many Krag rifles in the hands of the American public, as these rifles are now obsolete in government service. It is necessary to do considerable work on this type of rifle to make it into a sporting arm, but when it is completed you have one of the best bolt-action

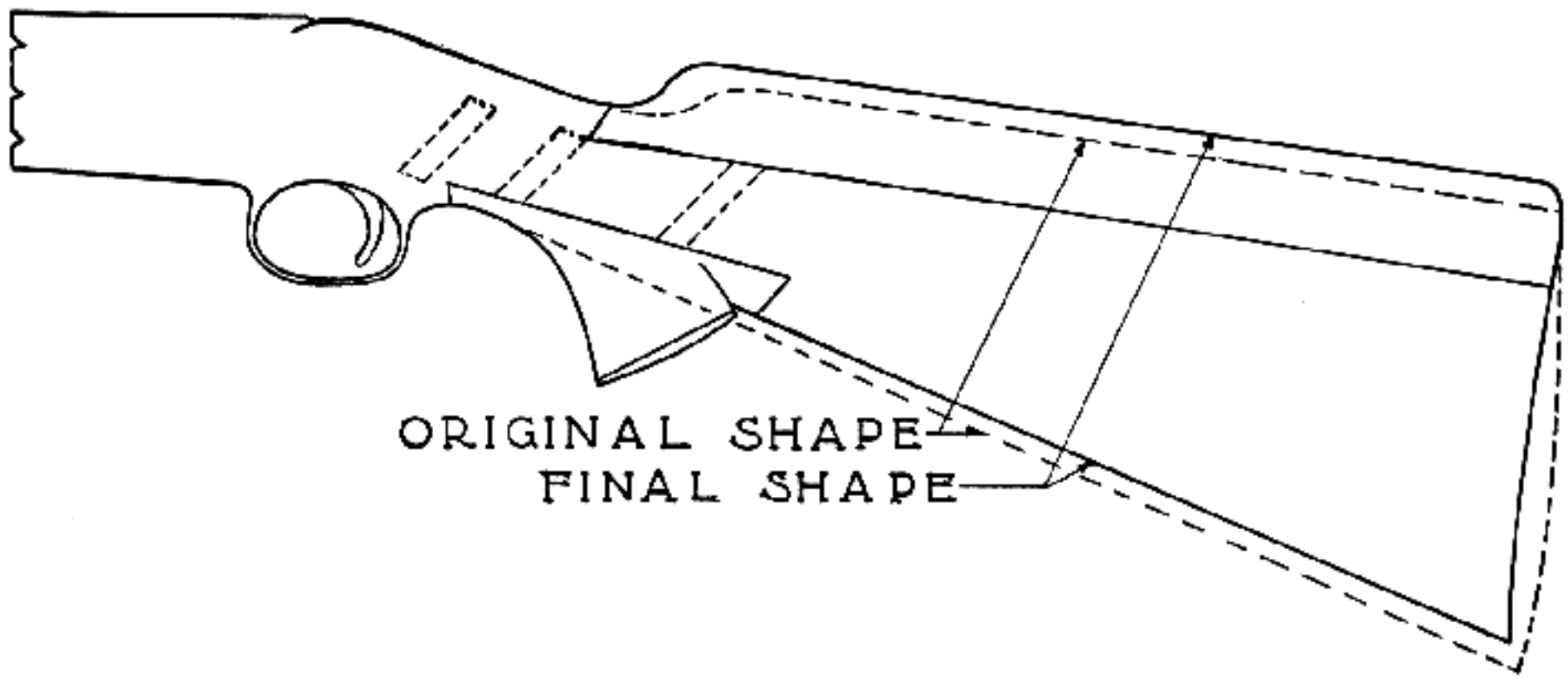

Fig. 100
Layout for inlay insertions in military service stocks

rifles that can be owned. It has only been a short time since I changed my opinion of these rifles, for when I was at the Arsenal, the Springfield model 1903 was my favorite. At that time the Springfield had become the standard arm and the Krag only a standby. After the government supply of Krags became exhausted in 1931 and these rifles were out of reach, I began to see them as of some value, not because of the smooth working of the bolt, but because of the handiness of the magazine. In the future, the Krag rifle will be more highly appreciated and will always remain one of the most popular big-game rifles.

The Attaching of Combs and Grips — Figure 100 illustrates the proper cut-out for the insertion of a comb and for a pistol grip upon a service stock, together with the correct method of lengthening one of these stocks when necessary. The drawing will show what may be done in the way of reshaping these butt stocks to obtain any desired shape and dimension. The dotted lines show the original shape of the stock, while the heavy lines show its shape after remodeling. The thin full-length lines show where the saw cuts will be made and the pieces of walnut inserted. Match these in color and grain to the wood in the original stock. The first cut is made in the upper side of the grip between ¾ and 1 inch ahead of the comb of the original stock. This cut is marked deep enough so that when the piece is finished to the proper outlines, the comb will not come out too thin.

With a small tenon-saw or hack-saw, start 1/16 of an inch inside the line you have scribed from the butt end to the first cut made ahead of the comb. Having removed this section, plane your insert perfectly straight on the bottom surface and cut the ends to the correct angle so that it will dovetail into its position ahead of the comb. When you cut this insert allow enough in height and width to give you excess wood for finishing to the dimensions you require. Work down the surface with a sharp chisel to a perfect plane in all directions. Work it slowly down to a fit, testing it constantly until it is impossible to see any light in the joint. Now rub blue chalk on the surface of the piece to be fitted, and spot the two surfaces together by rubbing back and forth slightly. With a file remove the high spots left by the chalk. Continue this until both surfaces are in perfect contact with each other. Make sure that the two angles fit perfectly. From the piece you are fitting remove all traces of the chalk with a damp cloth and you are ready to glue it securely in place. The question has often been asked me if these pieces should be doweled. No, I do not find it necessary to use dowels on perfectly glued joints. Use the best grade of hide glue, freshly made and applied hot.

It is necessary to work very fast when gluing wood together. Coat both surfaces with the hot glue, and instantly clamp. Hold firmly together with a couple of cabinet-maker "C" clamps. Tighten the clamps so that all surplus glue is squeezed out between the joints. Always have your clamps opened to the exact size before applying the glue, as instant contact is necessary. At the ends of the insert, where end wood meets end wood, it is a good practise to size with very thin glue (sizing is your glue thinned down with hot water), letting this soak in before applying the glue. This prevents entire absorption.

For the pistol grip, saw the cut-out at an angle of about 20 degrees from the straight surface of the stock. This cut should be deep enough so that it is possible to make a full close grip. The common mistake is to cut this out too shallow, making it a narrow grip when completed. The original stocks on the service and Krag rifles are made of a walnut which is not very strong, and it is, moreover, materially weakened by these inserts; hence I have found that the best practise is to put in three dowels as shown in the drawing. This will eliminate any possible chance of the stock breaking. I have found that it makes no difference how well the inserts fit; unless there are dowels there is a possibility of these stocks splitting from the recoil.

Your insertion will be a block of walnut, cut so that the grain runs well in line with the grain in the stock. Plane off the side you are fitting to the bottom of the stock to a perfect surface. The front angle of 20 degrees is to be laid from this surface and the back angle should be 10 degrees off from the side and 20 degrees on an angle from the flat surface. The 10 degrees makes it possible to fit in the block, giving it a wedge effect; at the same time you are able to secure perfect joints at the bottom and on the ends.

Having made the insert, lay this piece over the part where the cut is to be made and mark with a knife blade, allowing ⅛ inch or more on the front and rear ends, for fitting the angles correctly. Trim out the wood with a wide flat chisel to the proper depth on a scribed straight line. Use a scale or make a straight edge from a piece of hard wood. Begin to fit in the block, cutting down the angles until the block goes in at least three-fourths of the way. Coat the surface of the block and the dovetails with blue chalk. Start the block back again to find the high spots, and remove these with a sharp flat chisel. Continue until the block has a perfect bearing, both on the flat surface and angles. Use

the pressure of your hands only to fit the block, for if you use any other means you will split the wood near the trigger guard. Make the blocks at least one inch over the width required, so that you will have ½ inch over on each side of the stock when fitted. You will now bore two ⅜-inch holes for dowels as shown on the drawing and glue them in position. Place the dowels so that they will reinforce the stock at the points where it is liable to split. Let stand for four or six hours and trim off the dowels flush with the surface of the cut-out. You are now ready to glue in the insert. After clamping let stand between 24 and 36 hours.

The third reinforcing dowel is bored in at an angle starting from the inside of the trigger guard, using a ⅜-inch bit and boring well up in the stock. Glue and let stand between four and eight hours. Trim to the original lines of the guard. The drawing shows this location so placed on the angle as to take any shock that the two straight dowels will not stand.

The next stage is to determine the correct length of the stock. The service stock measures only 12⅞ inches from front of trigger to end of butt plate. This will be found too short, so if you wish to fit a metal or buffalo-horn butt plate you will find it necessary to glue a piece of walnut on the end to lengthen it. Select a section of walnut to match the grain in the stock. The stock must be cut off at least ¼ inch to get to a place where the oil has not penetrated, as glue will not adhere where oil is present. Get perfect contact between the stock and the piece to be fitted, using the piece as a master to spot to the face of the stock. Glue and clamp in place, remembering the preliminary "sizing." Let stand for 24 hours. Either dowels or substantial wood screws will be necessary for good security.

If a recoil pad is used this will lengthen the stock to the required length for the average person, which is 13¾ inches. When one of these pads will not lengthen the stock sufficiently, liners of black rubber can be built up under the recoil pad; these are not at all unsightly.

In working the stock to shape, the first step will be to mark off the drop from line of sight at comb and heel. Then on the top of the stock draw a center line from comb to heel. Check the stock for the required pitch while the rifle is assembled. After the end is cut off and a flat surface filed for the butt plate, scribe a line from the center established at the heel down to the toe. Now if you should desire a little cast-off, carry this line to the right ⅛ inch. That would be about all the cast-off you could get on such a stock. Attach the butt plate, allowing a drop at the heel of between 3 and 3¼ inches.

At the comb I always leave room for the bolt to just clear; this gives a drop of 1⅞ inches when using aperture sights. You will notice on all my stocks that I give a Monte Carlo effect with a drop of 2⅜ to 2⅝ inches, starting with 2⅜ inches drop at a place about two inches from the butt plate. Of course we have made the required drop at the heel, so we shape the top to these measurements, for the reason that in trying out the gun we can always reduce the Monte Carlo until the stock fits perfectly. Some do not require this additional height, but nearly everyone requires a drop between 2½ and 3¼ inches when the gun is brought up to firing position.

If you are tall, long-armed, and have a long neck, you will require a straighter stock. The Monte Carlo effect is an advantage together with having the butt plate come well down on your shoulder. Such a build requires a cheek rest as well as a straight stock, and not a great amount of pitch. A long stock is very advantageous in deliberate shooting, but for moving game and when one is dressed in winter clothes, a shorter stock will be better. A cast-off of 3/16 to 5/16 inch brings the gun more naturally to the eye.

A stocky person with a short neck, short arms, and a full chest will require less drop at the heel, and for this purpose you can also reduce the drop of the Monte Carlo. With the Monte Carlo such a person does not require a cheek rest, but a full comb and stock.

It is better that the stock be full where it comes against the cheek as it gives more support to the gun. You will notice that I have given a measurement of between 3¾ and 4 inches on different drawings from the top of the comb to the front edge of the pistol grip, and a length between 2¾ and 3 inches back of the pistol grip from the comb, and also a measurement between 3 and 4 inches back to the pistol grip from the trigger to the edge of the pistol grip. Carry a measurement between 3 and 4 inches back to the pistol grip from the trigger to the edge of the pistol grip. Now carry a measurement of 1⅞ inches from the edge of the pistol grip back to the 2¾ to 3-inch line. This gives you the angle of the pistol grip. Saw out to the lines thus made and place the pistol-grip cap in position at the edge of the front line, which is the distance from the center trigger to the edge of pistol grip. You may now start to rough down the wood to the pistol-grip cap, working to the edge to get the final shape of the pistol grip.

A great mistake the amateur makes in his first attempt is to undercut too great an amount of wood on the grip in front of the comb; the second mistake is to continue the shaping of the form of the

grip cap up to the comb. The beginner should study the photographs of various designs of stocks in the subsequent chapters and notice that the line of the pistol grip only continues a short distance upward along the pistol grip. This is to maintain a well-proportioned outline to the under side of the butt stock. The undercuts at the comb are also made for better outlines, and a cut-out on the right side for a thumb rest.

After having roughed down the insertions, mount the stock to your shoulder with the action and barrel screwed in place, in order to see just how the stock fits. Generally the comb will be found too high clear back to the raise of the Monte Carlo effect. Continue to reduce this without cutting the point of the comb away, for you have the proper height at that point. Continue to reduce the wood until you find when you bring the stock up to your cheek that the sight comes in perfect alinement on the object you are aiming at.

The fore-end of the stock has not yet been mentioned, so we shall do a considerable amount of work on this after deciding what is needed, such as proper length, filling in the barrel channel, and the finger channels if they are to have pieces inlaid. You may either round the end in the English style or with a "schnabel." Of course it is necessary to cut the stock off about 2½ inches ahead of the present front swivel and then to glue in a piece of walnut in the relief cut so that there will be no opening at the end. On the Krag stock it is not necessary to have any insertion for the barrel, as these stocks fit very well to the wood. The only thing you need to do is to fill in the small cut-outs made for the top hand-guard springs. If you want to leave the top hand-guard on and only fill in the cut-out where the sight comes through, all well and good; this is altogether up to the person who is going to use the rifle. These are so thin that a form is first made of wood and two C-clamps are used to hold each end down. The opening is then filed or cut out with a dovetail at each end. A piece of walnut is now fitted into the slot thus made and glued into place. After allowing the glue to stand for the required length of time it is finished flush with the outside. The inside must also be formed to the proper contour. After sanding and oiling, the guard is given straight lines over the sighting plane, a standard checkering tool being used for this purpose. These hand-guards could be moulded from hard rubber, but since there is such a very limited demand it does not pay to have a mould made. Personally I do not care for the hand-guard left on, for one can secure better outlines by leaving it off. Then you can round up the edges of the forearm from the receiver to the end of the stock and so do away with the flat surface of the forearm along the barrel.

After doing all this you are ready to set the stock, sand it down to a smooth finish, and complete the finishing.

Figure 101 gives a completed Krag rifle, showing the insertion of the top piece and pistol grip, also the stock lengthened and the forearm end rounded as made by an amateur from these directions which he carefully followed. There were some very small openings between the joints which are not pronounced in the photograph, but they scarcely showed after the stock was oiled and checkered. Such perfect fits can be made on flat surfaces so that when completed you can hardly notice a line. Notice how well the forearm is shaped; an outline not to be improved upon by a professional. Great credit must be given a person who is able to achieve such fine results the first time.

He who first attempts such an operation as this on a Krag or Springfield service stock has one important thing to remember—to follow all details and instructions given. Go slowly and watch every move you make so that mistakes will not creep in. Of course if an opening in the joints should show up when you shape the stock you can always resort

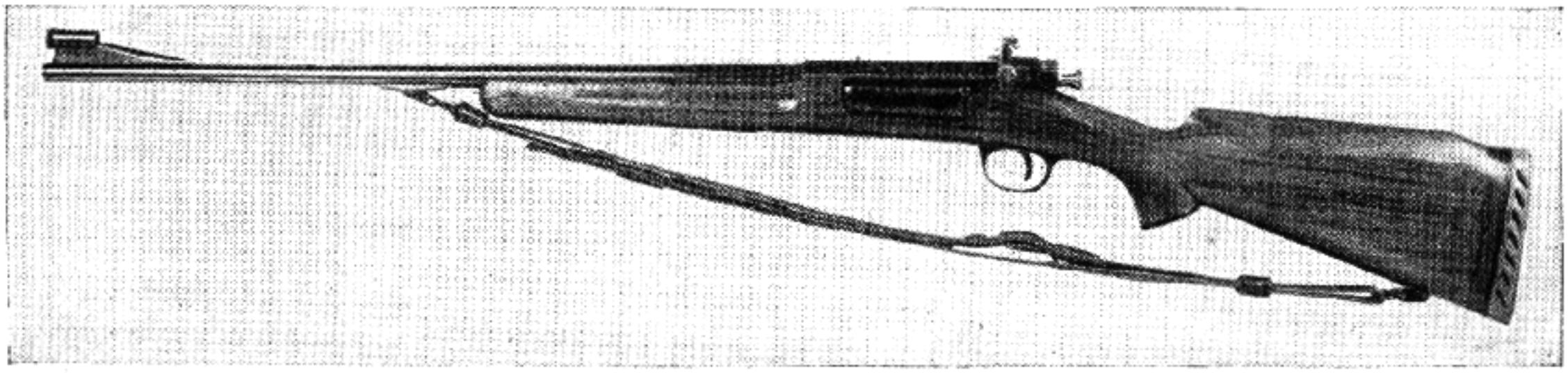

Fig. 101
Model 1896 Krag rifle worked over by Dr. M. D. Stepp: the graceful outlines are suitable for a one-piece stock

to a "dutchman," taking a piece of walnut, sharpening it into a wedge, and gluing it in place; but this is only an expedient and will remain to tell you of your blunder. Experience is our best teacher. If it is possible for the beginner to accomplish such a perfect specimen of inlay work as shown in Figure 101, what can one who is more familiar with the use of wood-working tools perform? All this fine work was done with the very limited equipment of a hack-saw, a bastard file, a wide butt chisel, a jack-knife, and sandpaper.

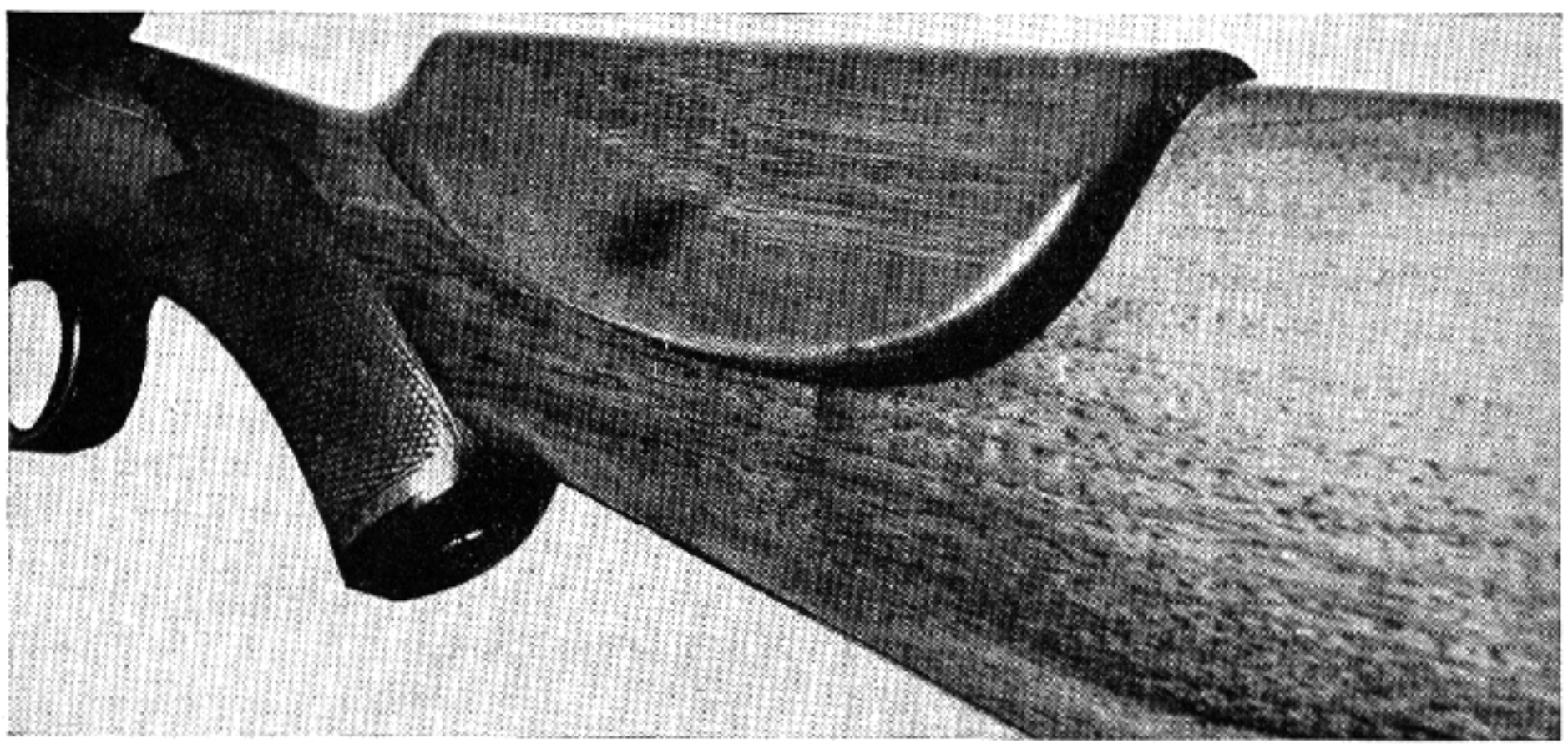

Fig. 102
The applied cheek piece. When set in place successfully it appears as tho integral with the stock

Cheek Pieces — Figure 102 shows a very successful method of attaching a cheek piece. This method is particularly useful when the comb is rather low and a person does not wish to go to the expense of having a new stock made. Such an addition glued in place on an old stock answers the purpose very satisfactorily and should not show any lines. You will remember that it is necessary to get under the oil or varnish finish in order to have the glue effective. Cut into the stock so that you obtain a true surface on the top and sides. Then cut out a piece to match the wood in the stock so that the grain will match and run in the same direction. Channel out the insert so that it will overlap at least ½ inch on the right-hand side of the comb. Work down the block until you have a fair fit; then coat the surface of the stock with blue chalk and gently rub the cheek piece in the exact position it is to have. If it is impossible to obtain any movement of the piece, gently tap it so that the chalk marks will show on the block. Continue to work down these high spots until a true bearing is secured. Take a damp rag and clean off the chalk. While the wood is wet, glue it into position and clamp. Let this stand 24 hours before shaping to the desired outlines.

A cheek piece can be placed on any stock, either rifle or shotgun, by first cutting out the cheek piece to the proper form from a piece of walnut, having the grain run lengthwise with the wood in the stock, or by using a beautiful contrasting burl and inlaying this. Having secured the proper lines, place the piece in position on the stock and scribe around it

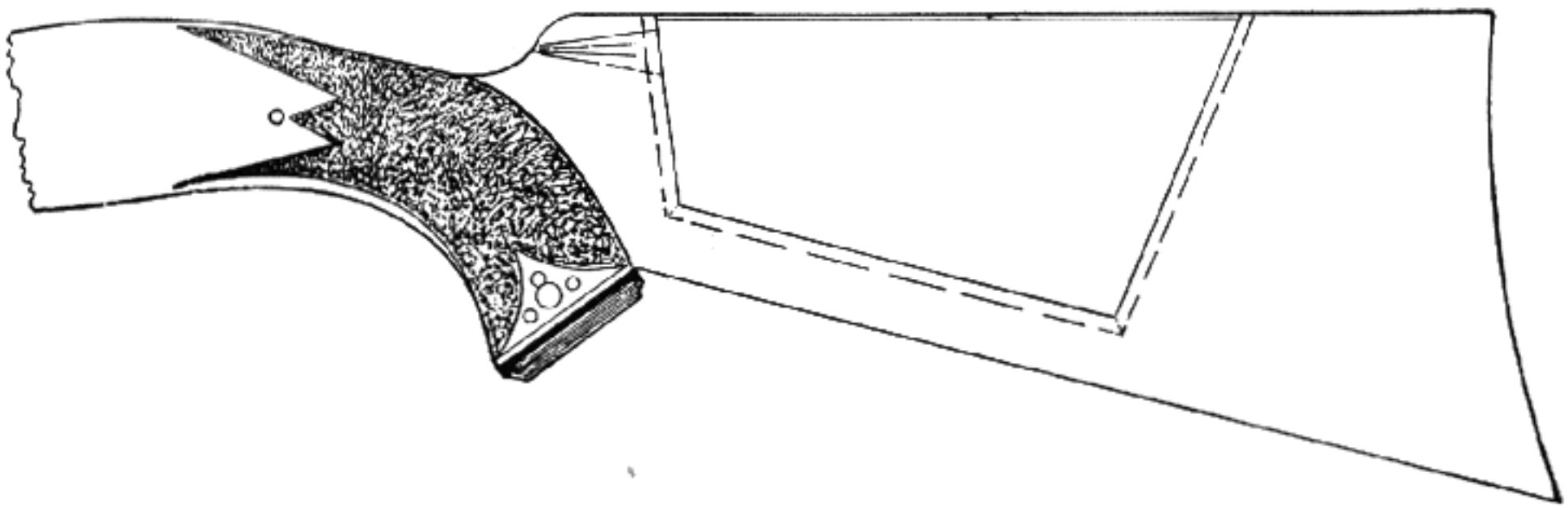

Fig. 103
Insertion of cheek piece

very carefully with a sharp scriber, then cut out the seat in the stock for the cheek piece to lie in. Remove just a little more wood at the top edge than at the lower edge of the seat. Spot the cheek piece on the flat surface with chalk, as before described, and glue into position. Clamp well and let stand 24 hours. Then shape the surface until it conforms to your face. I always hollow out my cheek pieces where the cheek rests; this is far more comfortable than a straight flat surface. When such a cheek piece is made you can not see any joint except along the top edge of the comb.

Figure 103 will show the method of fitting this cheek piece. I have also dovetailed cheek pieces into position when raising the comb, but this is a rather difficult operation to perform, and the other method is the best general practise.

The student may do considerable trap shooting and desire a Monte Carlo comb on his shotgun. This can be done in the same manner as shown in the photograph in Figure 104, but the effect should be carried well back and the overhanging part allowed to extend down ½ inch or more on the right-hand side. Spot it in the same manner as given for the rifle, glue into position, clamp, and let stand 24 hours. Then shape to the outlines required; on completion the joint should not be noticeable. This method of attaching Monte Carlo combs proves very successful on factory-made arms such as the Winchester models 97 and 12, Remington model 10, and Browning automatic. You do not weaken the stocks by this method as you would if you should make an insertion, for most of these guns have a bolt running lengthwise through the stocks to hold them to the action.

The shaping of cheek pieces such as these described must be done in an artistic manner or their appearance will be unattractive. A rounded bead raised about ⅛ inch from the butt-stock outlines breaks the monotony of them and adds a touch of style.

Refinishing — Any stock having an oil or varnish finish must be completely refinished. A varnished stock, if it is to be changed to an oil finish, must have all the varnish removed, and must be finely sanded and built up with repeated applications of oil. An oil-finished stock is very desirable, as its surface can be constantly renewed and scratches obliterated. Chapter XII gives full instruction for the finishing of stocks; this applies to old stocks as well as new.

When you alter or cut down a varnished stock, you will be forced to refinish it completely. Rubbing over the fresh spot with shellac or varnish makes a very poor job. Always prepare the stock for a new finish and you will be far better satisfied with the results.

Ideas on Patches and Insertions — Usually when a person gets the notion to lengthen a stock, his first idea will be to build it up with layers of leather, hard rubber, red or black fiber, ebony, different-colored woods, etc. These may be glued on in layers, and when completed they look quite well. But this is the rankest kind of patching and should be avoided if possible. When it is possible to secure a well-matched piece of wood to lengthen a stock, by all means use it, for if it is well jointed it is hardly noticeable. Black rubber or buffalo horn are the only butt-plate materials which give a stock the real touch of good taste.

You will sometimes hear of hollowing out a piece of wood for a pistol grip and gluing this in position on the under side of the stock. This is a very poor method. First, it is an impossibility to retain the inescapable feather edges of the sides without their showing, and secondly it makes a very weak joint.

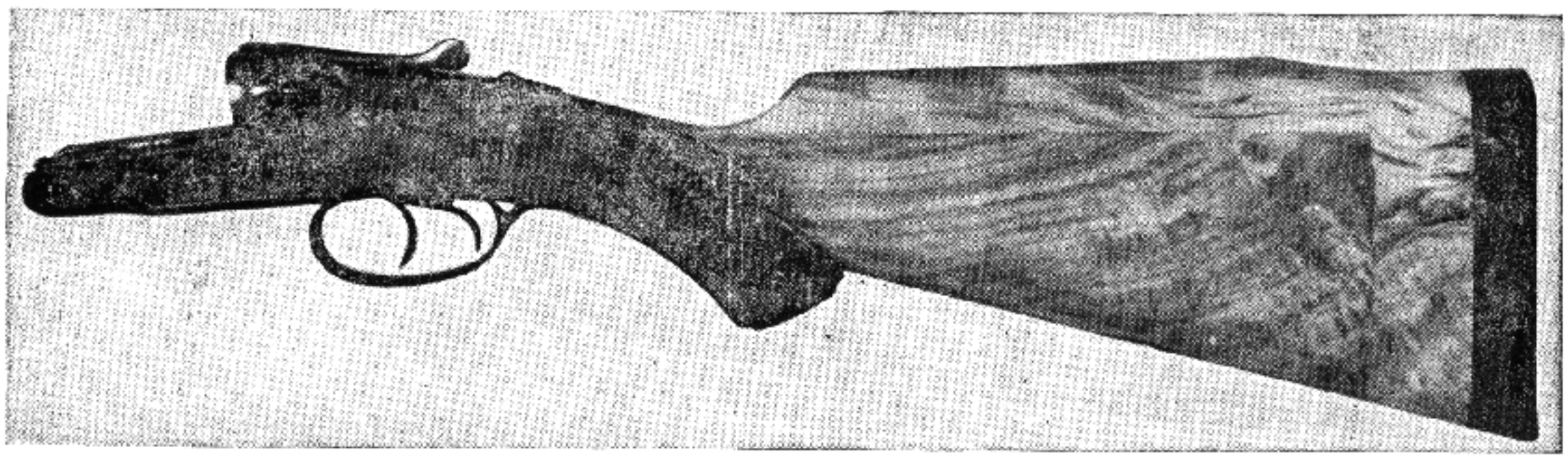

Fig. 104
Parker 12-gauge shotgun. The stock has been lengthened and the comb raised. Note the perfectly glued joints and how well the wood is matched

Such ideas are contrary to the laws of woodworking and should never be attempted.

You will find a number of stocks with pieces broken off the toe because the grain of the wood is short at that point. This can be remedied by cutting the stock back about two inches from the end of the butt plate and fitting in a metal patch a little wider than the stock. Drill and countersink for two wood screws and file to the outlines of the stock. Case-harden this together with the screws and you have a neater job than with a piece of wood glued in place.

When plugging holes rendered necessary in the repairs to broken stocks where screws are used to tighten the break, it is necessary to select wood to match the wood in the original stock, and to turn it with the side grain exposed. These plugs are easily made by marking them out with a pair of compasses at a spot in your board which resembles the wood surrounding the hole to be filled. Cut this out in a square with your saw, then to an octagon with a sharp chisel from the square; a little filing will bring it to a fit. Make your plug slightly tapering so that it wedges tighter as you drive it in. Wood is elastic in a measure and the microscopic accuracy demanded of metal is not required. These plugs can be made on your lathe, but they will take longer and be no better.

When swivels or screws are removed from butt stocks and the holes exposed to be plugged or inlayed, it is best to drill out the hole and then counterbore to a depth which will hold the inlay and at the same time be large enough in diameter so that it will look well when finished. Materials for such operations are either buffalo horn or ivory. If you want to accomplish more by means of an artistic inlay you can cut out a piece of buffalo horn or ivory in a diamond shape or any other balanced form that will look well, and set these by gluing them in position. You may obtain a very attractive color contrast by using ivory outside with the wood and buffalo horn in the center. Chapter XIII describes such methods.

Sometimes a shotgun owner, having a gun with some form of pistol grip, wishes a "straight grip" instead. This has always seemed to me a logical desire.

In British practise the "straight hand" is standard in field shotguns; half pistol grips being confined to heavy duck guns, and full pistol grips to rifles. With two triggers a pistol grip is really an anomaly, for if it is right for one trigger it must be wrong for the other. A straight grip, however, affords an easy shift for each trigger and furthermore gives a racy outline to a light gun which adds much to its beauty. This wished-for change is not always an easy one, so one must study the possibilities carefully before attempting it.

After you have made a thorough survey of the stock and found it possible to eliminate the grip, you will find it quite easy to make the actual alterations. Saw off the grip and use either a spoke-shave or cabinet rasp to remove the wood to lines desired. Care must be taken not to cut into the checkering any more than absolutely necessary. When this operation is completed it will be necessary to refinish the entire stock. You will have to straighten the trigger guard—this is only soft steel on most guns—but on some of the better grades the guards may have been case-hardened. When this has been done it is best to anneal the piece before straightening the guard, as you are liable otherwise to break it in the screw holes. When straightening the guard use a lead or rawhide mallet, resting the guard on a lead block or a piece of end wood. When proper shape is obtained screw the guard into the trigger plate and inlet into the stock. When rechecking, carry the design well back until it meets in a center line drawn down from the end of the tang back to a converging point. It is usually better to remove all the checkering on such a job and place on a new design rather than try to follow the old checkering, as the removal of the pistol grip brings your lines to a wrong position to look well when carried out again.

Reshaping Forearms — Forearms can be shaped to any desired form, particularly the military forearm for sporting use. This is generally easy, for the reason that there is plenty of extra wood to work on. The different kinds of forearms and tips are given in Chapter X and the student may work out any shape he desires, as long as it is within reason.

One often objects to the hand or finger grooves along the sides of the military stock. It is an easy matter to inlay a patch by cutting the grooves out square and about $\frac{5}{16}$ inch deep, and gluing the patch in position. Of course you will match the wood in the stock. Taper the inlay slightly on the sides and ends, so it will tighten into place. The inlay should be just a neat driving fit without any openings on the sides or ends. Glue into position, clamp and let stand 24 hours.

Many make the mistake, when cutting off a forearm on the service stocks, of cutting it just ahead of the sling swivel. This is done in order to have solid wood left where the web of the relieving cuts in. It would be much better to have about 3 inches ahead of the sling swivel. Glue a large enough piece into the exposed opening so that it will be possible to shape this into a neat forearm tip.

Broken Stocks — Repairs to broken stocks will tax the ingenuity of the beginner; you will have a number of such jobs come to your notice, all of which will be different. It is not generally practical to attempt these repairs. Shotguns are the most liable to have their stocks broken, particularly the cheaper grades, where the seasoning of the wood has been hurried and the wood made brash. You will sometimes find that the tang has imbedded itself from the recoil, and by a wedging effect has opened the stock and forced it to spread apart or loose from the action. This is an easy break to repair, for all that is necessary is to remove the stock from the action, spread the break apart, run hot glue into the crack and clamp tight, either in a vise or suitable wooden clamps. When completely dry, drill and counterbore through the solid sections of the stock and insert a 10 x 32 fillister-head machine screw with nut and washer. Counterbore deep enough so that it is possible to fill in both sides with a walnut plug, and glue in position.

Whenever it is possible to get two screws through a broken stock, it tends to strengthen it ever so much more. I have made repairs such as this to trap guns, and after a lapse of years they were stronger than the original stock. Some are not so easy to repair, particularly a shotgun stock that has been completely broken off by a bad fall. I had a Westley Richards gun come in with the stock broken off in front of the comb and splintered out very badly. It was a hammer gun with side locks; the wood was broken even back into the lock cavities. I gave the job up as hopeless and explained the situation to the owner, but he was willing to pay more for the repairs than the cost of a new stock. When I began to collect the splinters after removing all the metal, I found it was a hard matter to match these up on the sides; but the main break was comparatively easy to force together. After having clamped it securely in place, I ran a $\frac{5}{16}$-inch drill from the trigger-guard cutout on an angle back into the comb. Into this I drove a hickory dowel and applied hot glue into the ragged edges of the break and clamped tight. I now had the stock together so it was possible to fit some of the larger splinters in the sides. This operation was not so easy, for these did not fit very well and it was necessary to make new splinters and glue them in position as best I could. This required a number of days to do, but still I had several bad openings which could only be covered with a brass plate fitted to each side. So I formed the plates and then cut out the stock so these would just come flush with the wood. I then drilled the left-hand plate and used this as a templet, drilling through the wood to the other plate. Having secured the centers on the right-hand plate, I drilled this and tapped it for an 8/40 screw. I then countersunk the left-hand plate and turned and threaded screws from a brass rod. When I had everything ready I applied melted cement to the cut-out for the plates and put these in position with the screws, drawing the plates tightly together. This I let stand for 24 hours, and then cut off the rods and the projecting screws on the opposite side. After filing down the screws and plates and polishing these I damaskeened the surface and then lacquered them. Such jobs are unusual, but you can see that it is possible to accomplish the almost impossible when necessary. This stock was actually stronger than the original stock.

When bolt-action rifle stocks break through the grip it is better to make a new stock, for these are broken because of an improper selection of wood, the grain at this point not running in the right direction. If a stock splits back of the tang of the receiver, or if you notice the least indication of a split beginning, remove the action and relieve at this point, say $\frac{1}{32}$ inch of wood or more. Then further damage will be avoided. This condition is caused by incorrect inletting of the action, not having fitted the recoil shoulder tightly enough against that point in the wood, and not relieving the radius enough at the end of tang. I had a model 1898 Krag sent in to test and target which showed a small check about $\frac{1}{2}$ inch long running down from the tang. Not thinking anything about this, I started to fire the rifle. On the third shot the stock split straight back over one inch into the comb. It thus became necessary for me to repair this before any further testing could be made, unfortunately at my own expense.

A grip broken naturally calls for a new stock. Of course it can be repaired to give further service for a time, but the recoil will sooner or later break it apart again. However, by coating the broken surfaces with hot glue, and clamping together with all the pressure possible on the clamp, letting stand for at least 36 hours, then drilling from the receiver and guard and gluing in two $\frac{5}{16}$ hickory dowels together with brass plates as outlined in the Westley Richards shotgun, you can get a repair that will prove as strong as the original stock. I do not recommend it, however.

If a split in a high-power rifle stock is due to the tang of the receiver forcing itself into the stock, first repair the break, then look for the cause and remove it. I have found that attaching a shim firmly at the recoil shoulder together with a heavy coating of liquid glue, then screwing the action and guard together, and forcing the glue to fill in all the cavities at the recoil shoulder will make a much better joint.

Before applying the heavy glue, cut off the recoil shoulder just a little with a wide chisel to remove the oily surface so that the dry wood is exposed in its original state. Score the surface lightly so that the glue will be able to attach itself better to the wood.

When stocks show splits lengthwise they can be permanently repaired by forcing the break apart and introducing hot glue in the break. The crack must be forced apart carefully, so that you do not bruise the edges. Also take care not to lose any of the splinters that may come out. These should be kept in position, their ends left attached if possible, and must be coated all over with glue and worked back into their respective places before the clamps are applied.

Perfect contact and tight clamping are the secrets of well glued joints. Merely "pressing the parts in place" as you may have been often told, or binding with twine, will not do. Get plenty of pressure on them and let stand for a day or two.

Removal of Dents — Stocks which have been badly marred by an accident can often be brought back to their original condition by careful treatment. Examine the places to see if they are dents or nicks. If no wood was removed and they are dents, they can easily be removed by raising the grain again to the surface. Heat a flat-iron hot, wet a piece of heavy cloth, and lay over the dent. Take the hot iron and rub it over the cloth. Keep the cloth wet so that steam will form underneath. Repeat this until the dent is raised to the surface of the wood. This method will raise very large and deep dents. Most furniture factories use a steam jet on the dent, but the method outlined here will prove very successful. Deep gouges or scratches require complete sanding down around the point of the nick or scratch.

Steaming out a dent by either method will not hurt an oil-finished appearance except at the place where the dent has been removed. This you will sand with 7/0 sandpaper and re-oil until the finished appearance is returned. A varnished stock will naturally be ruined by the above method, so this will be a good time to remove all the varnish and give the stock an oil finish—provided, of course, the walnut has a good enough figure. If it is a soft plain piece of wood and the firearm does not receive very hard treatment it will be best to restore the varnish finish.

If a stock receives a very deep gouge which removes the wood, as by cutting on the edge of a sharp object, steaming will never again raise the wood to the surface. Shallow scratches can easily be removed by sandpaper and then the spot refinished. A really bad gouge can be filled with gunmaker's shellac. This you can make from the recipe given in Chapter XXV. Apply a piece of the gum and with a warm iron melt it into place so that the spot will be well filled, first warming the wood in the proximity to be sure of good adhesion. Let it remain until cold and solid, and then rub down to the original finish. Another method of filling in bad gouges on stocks is to get fine wood filings, mix this dust with thin glue such as Le Page's, and press this into the interstices, letting it remain until hard and solid and then finish the same as the surrounding wood. Neither this nor shellac will adhere where there is oil or where the surface has been oiled. In every case you must dovetail or undercut the sides of the hole so that the filling substance will have an anchor in the wood

Gunmaker's shellac can also be used for filling in around the barrel on the service stock when the top hand-guard is removed; or on the Krag stock where the top hand-guard springs clear the stock. You will find plastic wood recommended for a number of different jobs such as I have just described, but the appearance is very poor when compared to gunmaker's shellac; when the student become accustomed to the latter's merits, it becomes his best friend. Chapter XXV explains this formula and its preparation for use.

Plastic wood comes into use for building up grips on revolvers, bad cuts on the inside of stocks, filling in places where it will not be seen, etc.; but for the better class of work gunmaker's shellac is the only filler you should use.

No doubt there are a number of points I have neglected to cover in this chapter, such as, perhaps, building up stocks for target work. This class of work has endless limitations and must be solved piecemeal. However, from the general instructions I have given one will have a pretty good idea of the *modus operandi,* and by adding a little of his own ingenuity he will be able to meet differing conditions successfully.

CHAPTER XV

Laminated Woods for Gun Stocks

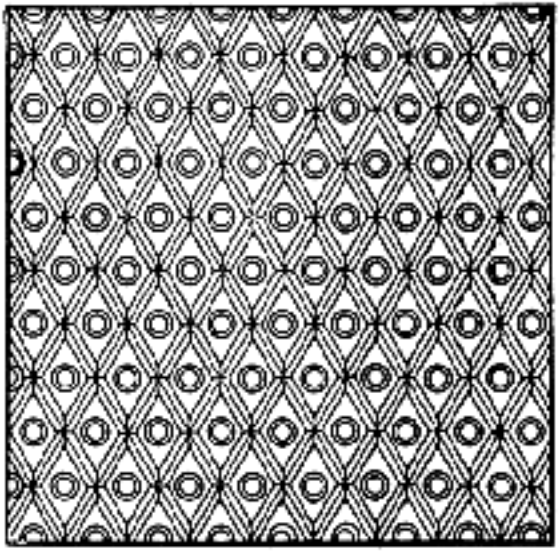

CHAPTER XV

Laminated Woods For Gun Stocks

IN RECENT years interest in stock making has reached a high state of development and the search for a supply of beautiful-grained walnut for the making of rifle and shotgun stocks has reached into the four corners of the world. Walnut is king among the many woods for stock making, but we often find that it is very difficult to secure a beautiful figure on the full length or both sides of a blank without examining hundreds of feet of timber in widths desirable for the making of a stock. The subject which I am placing before the reader is the possibility of laminating woods for gun stocks. It must be viewed from different angles as there are many factors which have to be taken into consideration.

The idea of wood lamination is similar to the veneer process of gluing a thin piece of fine wood to an inferior piece of wood. The manufacturers of such products have developed this to a very high state of perfection. Why should we not extend these possibilities to a gunstock, using three or more pieces of fine wood for that purpose? The actual effect of gluing two pieces of wood together cannot always be the determining factor in the choice of a method. Compare the large wood-working departments of our furniture factories equipped with modern machinery (particularly the planing machines on which it is possible to finish a perfect surface on a piece of wood) with the amateur's small attic or basement workshop. The amateur is quite handicapped when it comes to finishing thin pieces of boards; it is necessary for him to form two pieces of wood with a parallel surface so that when they are glued together it is impossible to see a joint. When the operation is performed by the methods employed with a wood planer, perfect work will result; the beginner will undoubtedly find some wood-working establishment to finish the pieces of wood selected for the operation.

The gluing may be easily accomplished by the student if he has a glue pot and has followed the instructions given in Chapter XXV, explaining the preparation and handling of glue. A thorough understanding of wood and its behavior under various gluing conditions is necessary, but the importance of a perfectly glued joint consists in many other things besides—a perfect surface, correct consistency of the glue at the correct temperature, a scored surface to the joints, rapid work in applying the glue, and clamping the pieces together perfectly tight.

It appears that there was never much attention paid to the lamination of different woods for gun stocks. The apparent inconsistency of the idea on the surface must be excused on the grounds of extreme deviation, but there is no reason why popularity and widespread use of this method cannot be resorted to, particularly when the scarcity of fine woods for gun stocks is so evident.

My first attempt was made on a Stevens single-shot rifle. Two pieces of American walnut were used with a piece of ¼-inch curly maple placed in the center; the white and brown colors between the two woods are very pleasing, especially in the center of the finished stock. Chapter VII offers some very pleasing effects, especially the insetting of the more valuable woods such as ebony, rosewood, amboyan, blackbean, blackwood, maple, mahogany, etc., or in fact any wood the fancy may dictate. For the benefit of those whose choice is restricted, I would suggest using some of our native woods which may be purchased from a local dealer. Glue small pieces of different woods together, using walnut for the outside and 1, 2, 3, ⅛, or ¼ inch pieces of different woods in the center of the experimental sample so that you may form some idea as to just how the stock will look when finished. In most instances, selected woods which will blend well with walnut are the most desirable; they are the darker varieties. The light-colored woods such as maple or satinwood form too startling a contrast; however, these combinations are a matter of taste. Figure 105 suggests the methods employing the different kinds of woods for a laminated gun stock and forearm.

Altho this practise is an artificial means of selecting the best parts of a blank, the idea of joining woods is old; curiously, very little has ever been done to apply the principle to a gun-stock blank; nor have I ever seen any articles published on the subject. For the student who is reaching out to create things just a little different, this field should open great possibilities for practical experiment. The general commercial practise of gluing woods

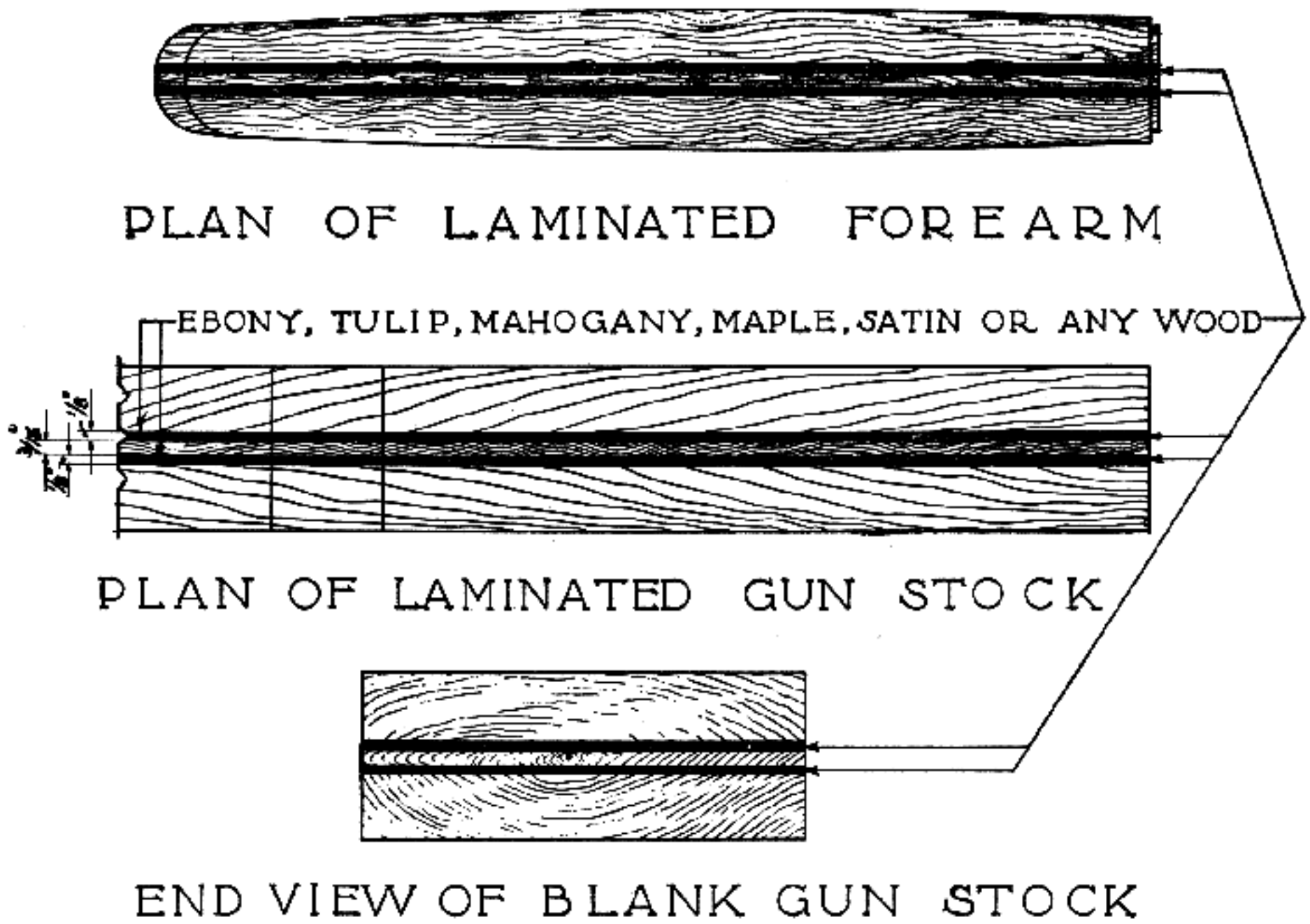

Fig. 105
Lamination of wood for gun stocks

together antecedes the present so far that it cannot be inferior to what one might expect in a piece of furniture as old as the manufacture of wood products.

So far as strength is concerned in a laminated gun stock, I am of the opinion that it would probably be much stronger than any one-piece stock. The first impression is that it would lack the fine appearance of a solid stock, and that exposure would cause warpage and render it unserviceable under various circumstances. This supposition is only natural, but I can assure you that you will find the laminated stock as strong as the solid stock, and with less warpage; for the wood is not running all in the same direction, nor is it from the same tree or species; when such a change takes place, one wood will have a tendency to compensate for the other running in the opposite direction.

As you are well aware, linseed-oil treatment is one of the best a rifle stock can undergo. It does not matter what suggestions are given and experimented with, in the end you will find the warm linseed-oil treatments the best.

As a matter of experiment, take a number of stocks, both solid and laminated. Make elaborate gauges to test the warpage, and you will find warpage existing in all stocks, some more than others. Test them at two-week intervals, and even tho they are kept in a room where the temperature can be held at a given point, you will be surprized to learn that they have warped decidedly.

During the oiling and finishing period you will often find that a stock has changed to such an extent that the metal parts have large openings because of conditions which cannot be controlled. Quite frequently the warpage would be enough to put a strain on the barrel, bending it, if allowed to be assembled in that condition. The aim of iron sights will also change with the barrel. Such slight strains will scarcely be noticed by the sportsman who uses iron sights, but they will often be noticeable to the one who uses telescope sights, especially those that are fastened to the receiver only. Many telescope mounts are blamed for the changes in their settings, particularly those of the Niedner design, when the real cause is warpage of the stock.

You may find one stock in a hundred that will have such grain and density that it will warp so as decidedly to change the elevation and windage of the rifle and be in such constant state of change that the sportsman can never do very good shooting. The rifleman should have no trouble, provided the rifle be properly bedded in the stock at the start, the stock properly treated with linseed oil, carefully guarded from exposure, and occasionally re-oiled. Naturally, if a rifle is laid on its side on the damp ground for several hours with the hot sun shining on the other side, or if it gets thoroughly wet in the rain and is not promptly dried off and oiled, the owner will probably experience a

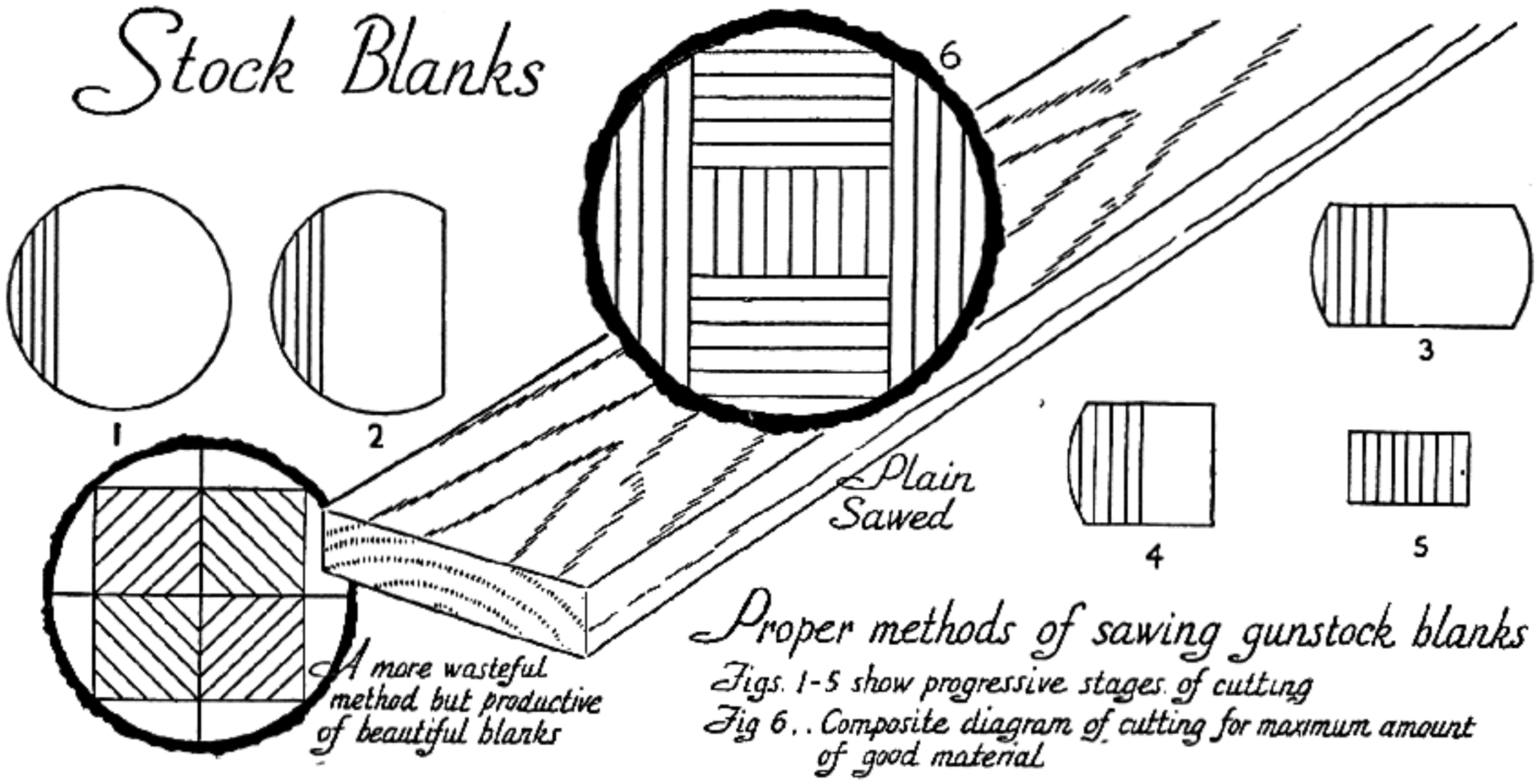

Fig. 106
Correct way to saw gun-stock planks from log

considerable amount of trouble. All the bad scores, however, cannot be laid to a stock, whether it be solid or laminated, for a number of other faults can be found to produce the same results.

Structure of Wood — The chapter on the selection of woods is very complete, but in this chapter different points should be brought before the reader so that no misunderstanding will take place. It should prove especially helpful to those who prepare their own seasoned lumber for the purpose of laminating a gun stock. The process of seasoning and correct cutting of wood for gun stocks is perhaps least understood by those who cut wood from the back lot or forest.

Seasoning means to make fit for use; therefore, in wood it invariably means the removal of some of the moisture, or drying. With respect to some other commodities seasoning may have a different meaning, as the seasoning of food with salt. The removal of moisture from stock blanks is usually done by exposing the blank to outdoor atmospheric conditions or to the higher temperature of a dry kiln. A great amount of wood is air-dried only—especially that which is used for gun stocks—and put under proper cover with a free circulation of air.

This information will not only be of immediate help to the practical man whose duty it is to seek something a little different, but will enable him to select the finest parts of a walnut blank to make a gun stock without paying an exorbitant price. It is hoped that these suggestions will arouse the interest of the student so that he will do some intelligent experimenting on his own account. In so doing he will not only develop efficiency but change a subject into an interesting and challenging opportunity.

The next question for discussion is the selection of blanks. This is not directly understood by many who cut their own blanks for gun stocks. Because of the presence of medullary rays and annular rings in wood, it may be cut into blanks in two distinct ways. It may be cut parallel with the rays across the rings; that is, from the bark toward the center, producing what is known as radially cut, quarter-sawed, or edge-grained blanks, or it may be cut at right angles to the rays or tangent to the rings, producing tangentially cut, planed, sawed, or flat-grained blanks, as illustrated in Figure 106. Here is the correct method to cut wood from a log for a gun stock blank or pieces for the lamination of a gun stock. Figure 107 shows the quarter-sawed method of cutting the log, but this is not desirable for the blanks used for gun stocks.

The plain-sawed planks will dry more rapidly than the quarter-sawed, even under the same conditions, because the purpose of the medullary rays is to conduct moisture or sap across the grain. Timber is composed very largely of organic matter, the proportions reaching to a high percentage in some woods. The organic matter consists chiefly of cellulose, and it is utilized for building up the cell walls. The cells are filled with protoplasm, commonly called the "physical basis of life," which forms the vital element in both animal and vegetable existence. The protoplasm is gradually absorbed by the process of adding more thicken-

ing material to the cell walls; eventually the cellulose becomes converted into lignin or wood fiber and matures into true wood.

The result of this preponderance of organic matter is that timber becomes peculiarly liable to decay once it has been felled and its life destroyed. The decay is accelerated if the tree is felled during the summer months when the cells are full of sap; this causes fermentation to take place in nearly all kinds of timber. Felling should only be done during the time when sap is dormant; this period extends from autumn to about the end of March.

Among the main sources of trouble will be shrinkage and swelling, which will occur in moist climates and when two or more pieces are glued together; if the contraction and expansion are uniform throughout the wood employed, comparatively little trouble will result. On the other hand, checks and even the wood working away from the action may cause the wood to become distorted in shape when such stresses are set up in the glued pieces. Therefore, the correct seasoning must be given the wood before attempting the lamination of a gun-stock blank.

End Checking — When preparing the blanks for stock work the ends should be protected from "checking." The checking of blanks used for gun stocks is caused by two things: (a) uneven drying; the ends of timber in a pile dry out more rapidly than the portions farther back because the end grain gives off the moisture more rapidly and also is exposed to the drying influence of air which causes severe end-checking; (b) tangential shrinkage; this is greater than radial and therefore blanks containing pitch centers will check because the wood dries more along the rings than toward the center. In blanks cut through the center, the halves can cup and thus reduce the checking. When plain sawed lumber is held flat so that it can not cup in drying, it is very likely to check along the middle.

End-checking can be reduced by coating the ends of the blanks with some moisture-retarding material such as linseed oil and barytes, or a high-grade spar varnish and barytes. One or two parts of lampblack may also be added if a black coating is desired. The protection of the wood means the long life of any gun-stock blank regardless of the nature of its structure. The proper seasoning of wood is the first consideration, whether it is a solid piece of wood or a laminated piece, regardless of the number of pieces joined together. Such an idea may meet with many obstacles, mainly criticism from different authorities on the subject of laminated gun stocks, but I can see greater possibilities when carried out in better woods and with pieces made beautiful in color contrast. The student seeking results can well afford to improve on any experiments carried to a higher perfection of beauty in the selection of desirable and valuable woods from the earth's four corners.

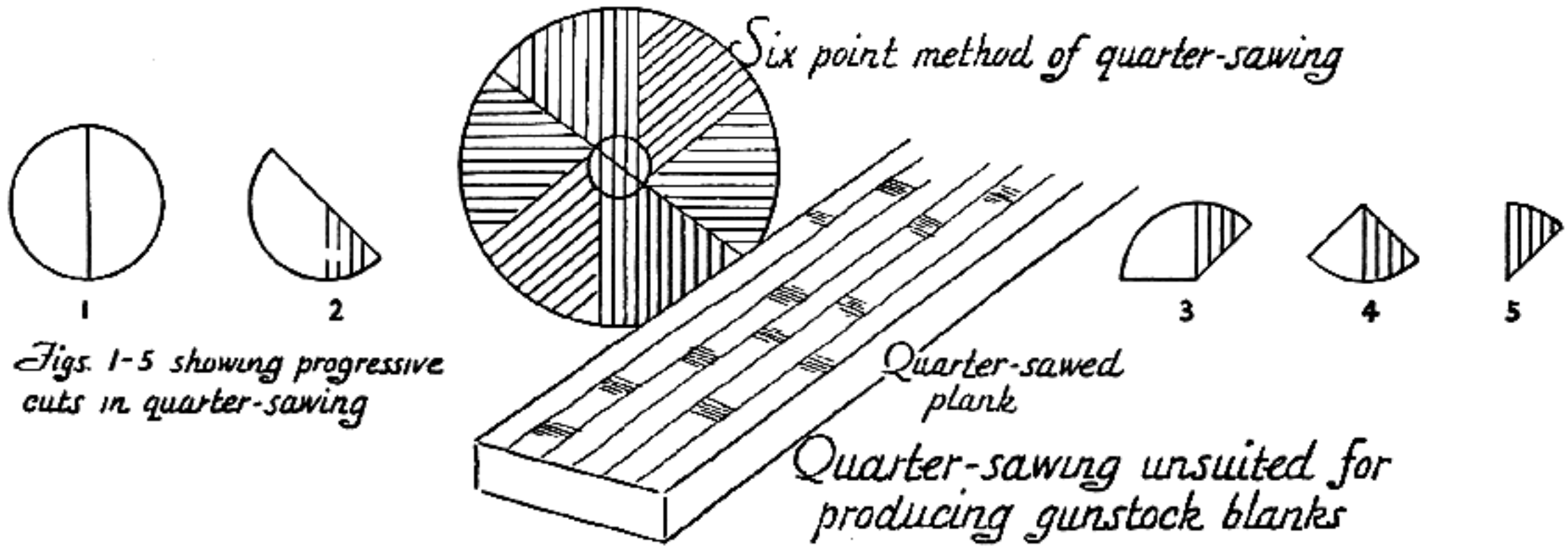

Fig. 107
Incorrect way to saw gun-stock planks from log

CHAPTER XVI

Modernizing Military Small Arms

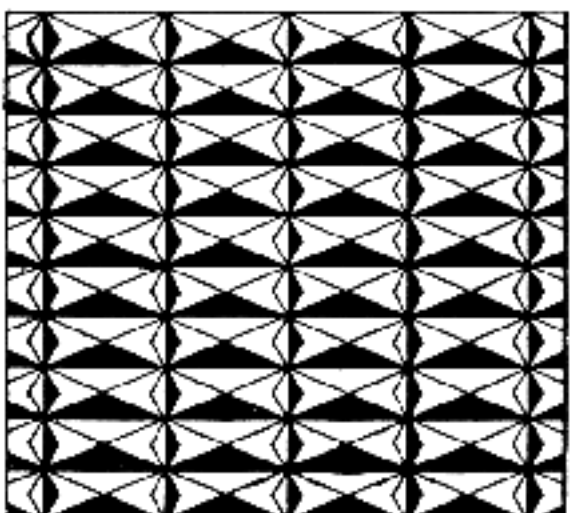

CHAPTER XVI

Modernizing Military Small Arms

I MIGHT as well confess right away that I am in favor of the bolt-action rifle. This seems perhaps unpatriotic and un-American, for such a preference seems to ignore the long series of world-embracing steps that are inseparably connected with the American rifles, none of which are bolt-action. Has not the name of the creator of more than one American rifle become synonymous with the rifle itself? To say a man was armed with a Winchester or a Colt does not require that we add the word rifle or pistol. These proper names have become common nouns in the language.

My preference for a bolt-action rifle is based on several reasons. In the first place, I am a stickler for extreme accuracy. To get this one has to have modern ammunition, and both demand this kind of action. In the second place, no form of action permits greater adaptation; and this, to the shooting gun maker, reveals endless possibilities. Please do not think for a moment that I do not perceive and extol the good qualities of other kinds of actions for specific purposes. In our Eastern "bush," when one's quarry is deer, what could a man have better than a quick, light-lever-action Winchester? Or, in a big-game rifle, is anything as good as a double Holland & Holland with shotgun action? (See Figure 108.) Other instances spring to mind as readily and surely.

the latter because of their inexpensiveness. The Springfield also, because it is designed exactly for the .30-06 cartridge, will always have a great appeal, for this is considered the world's best long-range load, and even now this particular barrel and caliber seems to handle reduced short-range loads better than any other size.

The United States Government, in making this rifle available to its citizens, has conferred upon them a priceless boon. One has only to become a member of the N. R. A.* to secure this fine rifle and ammunition at cost. The government has even gone further than this. It has actually gone to the trouble to provide its military arm in sporting stock and sights, and this not only in the 03-06 caliber but in 22 L. R. also. Here we have the makings for the best sporting rifle available. Second only to this, is the Enfield 1917 model, made for use in the Great War by our leading manufacturers and taking the same cartridge. This has an added advantage to the poor man because of its low price. The Lee Enfield, made also by the British, and the Canadian Ross rifle, both taking the .303 British shell and having ballistics similar to our .30-40 Krag cartridge, make very useful arms. Last but not least is the good old Krag, superbly made in the government arsenals, and making in sporting dress as good a rifle as most

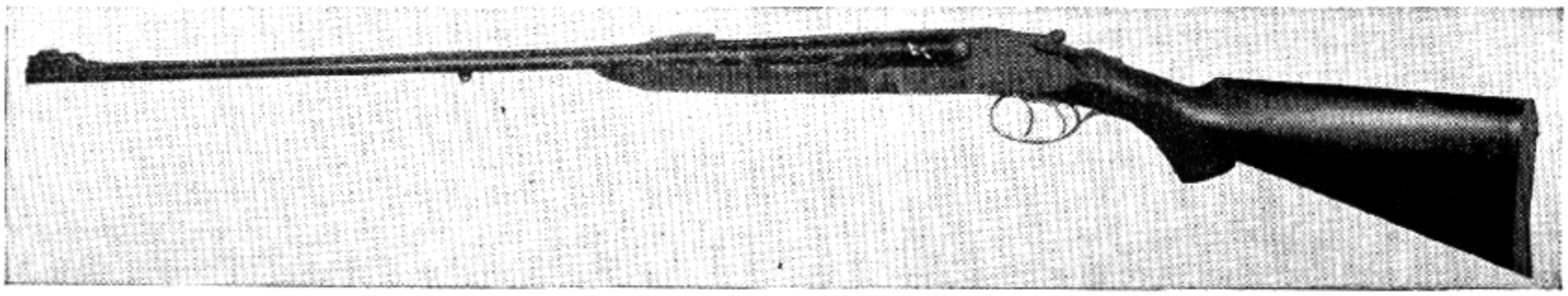

Fig. 108
Caliber 350-2 Rigby double-barreled rifle: a true work of art

While all our important American firearms manufacturers make bolt-action rifles, and good ones, the amateur gunsmith will generally use in his experimenting and remodeling, a military rifle, either the U. S. Springfield, an Enfield, or the Mausers, Mannlichers, and Nagants of European manufacture. The former because of their great excellence,

men would desire. With all this excellent fare, few will desire to go further; still, for those with abnormal appetites, a new range of possibilities is available by fitting barrels of other calibers to these self-same rifles such as the 6.5 and 7 mm., which are also world popular.

* National Rifle Association, Washington, D. C.

Let us start by describing how to remodel a military rifle for sporting use, retaining most of its parts. We shall first dismount it, separating the metal parts from the stock. This will give us greater freedom in the use of our tools. Let us take the stock first and see what we can do with it. The first thing is to remove the excess oil with which it has been treated. This is best done with gasoline. You will notice that this stock has been made for hard service rather than beauty and is a compromise in dimensions, being built to accommodate all sizes and kinds of men. You will find, in most cases, that the butt stock is too short. You might lengthen it with a piece of wood neatly applied under the butt plate, or by a thick aluminum plate; but really the easiest way, and a way that adds another great advantage, is by means of a rubber recoil pad. This also does away with the patched-up appearance that the other methods cannot avoid.

You will note now that the "hand-hold" or grip of the stock is pretty large and that the comb of the stock is rather low. Both can be helped with the spoke-shave, for in reducing the size of the hand you will get the apparent effect of raising the comb. If you have a good shotgun, use it as a guide to your shaping. You will not be able to get all you may desire in shape, but you will be able to make a marked improvement.

You will doubtless decide that you would prefer a fore-end of sporting length, so you will cut off the forestock ahead of the rear barrel band. This will reveal an opening between barrel and stock which you probably did not suspect. You can seal this by fitting a piece of wood into the space; but there is a better way, which is to fit a fore-end tip of contrasting wood or horn to the end of the stock. The method of doing this was fully described in the chapter on stocking, to which you will refer. If you decide on a tip made of wood, make it of hard maple. This you can stain black; at a short distance it will closely resemble the higher-priced and harder-to-fit horn. It would greatly help the appearance and grip of the gun if the grip and fore-end were checkered, but I do not like to advise you to attempt this until or unless you have experimented with this operation. It is also fully described, with its tools, earlier in the book. Let us say that it is much harder to do than it looks, and that preliminary practise on scraps of hardwood is advisable before tackling a stock.

The removal of the hand guard has also revealed another hidden surprize. This is that the barrel has not been smoothly finished except where it is exposed. This roughness cannot be perfectly removed except by smoothing and polishing in a lathe, but you can do a very respectable job by draw-filing. As you have only a short piece to do, this is the method you will use, following it with emery and the finer abrasives until you are satisfied. This will require that you reblue the barrel, so judge first which you would rather have, the tool marks or the coat of bluing.

Our next consideration is the matter of sights, a very important one. No rifle is better than its sights. The sights on the military rifle as issued are not suitable for hunting or even the best target work. The front sight will, of course, answer, but here improvement is easy and inexpensive. Lyman makes an interchangeable sight in several styles that can easily and quickly be substituted.

The rear sight is rather more complicated, but you can make a number of combinations on the fixed base of the Springfield, especially if you are a young man with normal sight and can get a clear image with a sight as near your eye as a sight placed here will necessarily be. You can easily determine this by taking any common leaf sight or a piece of metal filed to this shape and sliding it along the barrel as you hold the gun in firing position. When you reach the point of perfect definition this will locate the sight position. The height will be determined, of course, by the height of your front sight and the range. If you find then that you are able to use the fixed base on the Springfield, you will remove the present sight from the base. This is done by completley turning the windage screw until the sight is turned out and can be lifted off the pivot lug or projection.

You will now have a chance to use your ingenuity in designing and making a leaf sight, or a set of them, which can be affixed to this base. A series of separate leaves filed to 100, 200, and 300 yards elevation are really the best, but unless you are prepared to make the two folding leaves spring-controlled, so that they will not flop in use, you will be best advised to secure a rear sight with elevating ladder such as is used in the generality of hunting rifles and use this as a base for your sight. If you intend, in addition, to use a Lyman peep, you will find that marble makes an adjustable sight, the ordinary standing part of which can be turned down at will. In a later chapter, I shall describe the many varieties of sights and how they can be made completely; if you are ambitious to go the whole way, study that chapter.

The use you are to make of your rifle will determine your sight equipment. Some of my good friends who are real sportsmen think that a rear

barrel sight should be ignored, and their own rifles are consequently devoid of them. In this, I do not agree. There are times when a rear barrel sight is the best bet, and furthermore, they serve two other functions—they serve as a spare sight should the fragile peep sight be broken, and they also serve as a check-up for elevation. This is a mighty useful adjunct, for somehow one's hunting companions do like to play with one's sight-adjustment screws in the evening at camp. A glance over one's barrel sight instantly detects any maladjustment.

It is a mighty good plan, in off-hand game shooting, to adopt the principles of the wing shooter; that is to fire the gun the moment the rifle touches the shoulder. Any poking or changing aim at moving game means the game will usually keep right on moving. This necessitates a "point blank" sight position adopted and made constant. This you should do before you ever enter the woods. All your adjustments will now be a matter of instant judgment based subconsciously on the distance to be met. Both the aperture sight, if it is a ring-type eyepiece like the standard Lyman, and the plain bar rear sight are equally quick and suitable for this kind of snap shooting. The eye does miraculous things, and one of them is the instant automatic centering in an aperture if you do not consciously interfere with it. Incidentally, I strongly advise that a rear sight be straight across its upper surface and not cut to a V formation. A light platinum line running vertically at the center is a slight help perhaps, but this line must terminate 1/16 inch from the top or it will blend with the front sight and destroy all certainty of elevation. An ivory pyramid inlaid in the face of the leaf with its apex terminating at the same place is also excellent. However, your eye, if you trust it, will do the trick quite unaided.

For purely target work at known ranges, a different sight equipment is necessary. Here doubtless there is nothing equal to a Lyman sight adjustable to both elevation and wind allowance and capable of the finest graduations. A disc used in the turret will cut off disturbing light rays and thereby give sharper definition. There still remains the increasingly popular scope. I shall refer you to Chapter XVII for this and its uses, as it is too technical a subject to treat with the briefness necessary in this chapter.

We now must think a moment about our trigger pull. Most military rifles have poor trigger pulls. This is brought about by the necessity of safety and rigidness, features that must always be inseparable in military operations. All modern military rifles have therefore a "safety" or preliminary pull. In target work and in the battlefield this offers no objection—in fact, it confers a benefit; but in the hunting field it is not quite satisfactory. Your trigger, however, can be adjusted to the latter purpose. I don't want you to do it, for it is a delicate job and calls for a lot of experience. You had better send the rifle to an accomplished gunsmith, telling him just how many pounds trigger pressure you prefer. A trigger is something we must take no chances with. I fit, when requested, an adjusting screw in the guard of a rifle, which can be regulated to a desirable pull and securely locked in position. This is an expert job, but it is the real solution of trigger adjustment.

Everyone would find pleasure in owning a sporting Springfield, but many riflemen feel they cannot afford to have a service arm remodeled. The beginner will immediately visualize the finest remodeled gun that is possible to build with the base of a military arm for the foundation; but be contented for a time with the rifle in its present condition, until you lay plans for its future development.

We have a number of military arms to work upon as well as the Springfield model 1903 and Enfield model 1917. Perhaps there are some who are fortunate enough to have one or several of the following military arms in their possession: the British Enfield model 1907, French Lebel model 1886 or 1893, German Mauser model 1898, Austrian Mannlicher model 1885, Russian Nagent model 1891, and Japanese Arisake model 1905 (a number of these were sold in England about 1925), Italian Paravici caliber 6.5 mm., Belgian Mauser model 1889, Ross model No. 5 British caliber .303 and .280, or any other rifle classed as a military arm. The next question is that of ammunition. The model .30-1906 full metal-patch ammunition can be secured by members of the N. R. A. This, of course, is the logical cartridge to choose for the rifle that will handle this ammunition.

The 8 mm. cartridge is a standard for use in the German Mauser military rifles and is made by our leading cartridge companies. This, together with the better 7 mm. and .303 British ammunition, can be secured in any part of the world. It is possible to secure all kinds of cartridges for foreign rifles through some of the import houses of New York, but from the standpoint of accuracy and economy the .30-06 cartridge is the best for the American experimenter and rifleman. Of course, if you should be located in some other part of the world, adopt a cartridge which is standard there and can be secured as easily and economically as the .30-06 ammunition.

Whenever one of the other military arms is in your possession it is well to experiment in order to understand its peculiar characteristics.

When a customer comes in and wishes leaf sights fitted to his rifle, I always try to get an idea of the section of the country in which he wishes to use the weapon. This gives me an opportunity to explain the advantages and disadvantages of the different combinations. Nearly everyone will prefer some particular combination, and I naturally have to give a person what he wishes, regardless of the suitability or not. This is unfortunate. The British gunsmiths make the finest kind of leaf sight. It usually has a wide V-notch, and in addition to the standard there are folding leaves equipped with retaining springs. These have a vertical platinum line designating the center. You realize the suitability of these sights on a heavy double rifle, particularly when faced with charging dangerous game, for they are lightning quick. Their front sights do not usually please me. They are too fine in sections, and therefore frail. It seems to me that they are next to useless for hard work and rough usage, as they are easily bent and displaced, and this puts the rifle out of commission. Hunters carry extra front sights in a receptacle in the stock, but how much better a solid steel blade of ample size would be!

Then we have the peep or aperture sight. So much has been written on this subject that I do not feel justified in explaining its advantages and disadvantages. A separate chapter will be devoted to this subject alone. In my opinion the aperture sight is the quickest sight there is, and if there were no unfavorable conditions it would be perfect. These are useless, however, in rough mountain work and in jamming in and out of saddle boots, because of their delicate mechanical adjustments. The fine accuracy demanded on the rifle range is the proper and obvious field for them.

The choice of a front sight requires as much thought as a rear sight. Chapter XX, Volume II, gives you a number of ideas on how to make these. I have made so many different kinds for customers, that it really is a hard matter to say just what is best. From the illustrations, one can pick the one which is best suited to his individual preferences.

There are thousands of men, some of them not gun cranks, who pick a rifle to pieces the moment it gets into their hands. The student should never develop into this class. The men who designed the rifle did so for some reason, knowing from long experience just what was best. So don't rush in and try to change everything for some fancied advantage until you are sure that it outweighs the disadvantage that should come up under other conditions.

A very suitable subject to work upon and express your ingenuity on is the Russian 7.62 mm. (caliber .30) Nagent rifle. A brief history of it and of how a large number of rifles of this model came into the possession of the United States Government may be of interest.

At the time of the World War, the Remington Arms, the Winchester people, and the New England-Westinghouse Company had large contracts with the Imperial Russian Government for a supply of these rifles. When the Union of Soviet Republics took over the Russian government, these three companies had several thousand finished rifles on hand. These the United States Government bought at a very reasonable price, intending to use them in the drilling of recruits, as the supply of Springfields was insufficient. With the war over, the government had no further use for them, and the D. C. M. was therefore instructed to dispose of them. They are good subjects for the amateur to work upon, for they can be converted into a very fine hunting arm, as the foundations are there, and they are strong and reliable.

This rifle uses a rimmed cartridge firing a bullet of 150 grains weight. The caliber is 7.62 mm., which is in fractions of an inch .2999 or .30 caliber. It gives an initial velocity of 2900 ft. sc., so you see it is ballistically up to date.

The Remington Arms and the United States Cartridge Companies both make the ammunition for this rifle. The .30-caliber Springfield service bullets and the .30 caliber 172 grain boat-tail bullets work very well in this rifle. The groove diameter is a little larger than the Springfield because it was necessary to give a somewhat greater manufacturing tolerance in the hurried manufacture of the rifles. This is likewise a fault in the model 1917 Enfield, which was also made by the Remington Arms Company.

The bolt handle of this rifle extends rather awkwardly. It can be altered to a more normal position, but this is a job rather beyond the ability of the beginner. How it is done is explained in Chapter II, Volume II.

The beginner has a wide range of possibilities in the remodeling of this rifle. He can build up and reshape the old stock as described in Chapter XIV, or for experience he can make a complete new stock. The barrel can be shortened to any desired length. Sights can be fitted (see first part of this chapter). Lyman makes an aperture rear sight adapted for this rifle, and this simplifies the question of sights. When all the changes are made,

Fig. 109
An amateur's gun shop. Dr. E. J. Witzel in a corner of his basement. The attic, the woodshed, and the basement are rivals of the laboratory in this fascinating work

the metal parts will be reblued and the wood polished. The beginner will be surprized when he sees one of these rifles properly worked over, for he will find that he has a very good sporting arm. See Figure 109 with one on the bench.

The model 1917 Enfield rifle is one of the wartime products and is also sold through the D. C. M. to N. R. A. members. It costs $7.50 in used condition and $20 new. These were made by the Remington Arms Company for the British .303 cartridge, and for the .30 U. S. cartridge. This rifle has some good features, and can be made up into a very serviceable sporting arm. The Remington Arms Company is still using the receiver

of this rifle in its sporting models, so when you are in one of the large sporting-goods stores, ask the clerk to show you a Remington Model 30; this will give you some ideas which you can utilize. The military model as issued by the D. C. M. is an unsightly affair, but do not be discouraged. The same suggestions apply in this case as in that of the Russian rifle. The rear-sight base is a part of the receiver on this model and so must be removed by grinding. New sights, either leaf or aperture, can then be applied. By filing off the present rear sight, a Lyman .48 can easily be fitted to the contour of the receiver on the right side.

You will not be as well satisfied with this rifle as with some of the other military models, but your main problem is to gain experience. Do not allow likes and dislikes to influence you greatly, until the time comes when your judgment is worth something. The Enfield is the most reasonable-priced rifle handling the .30-06 cartridge. Some of the barrels are oversize in the bore as much as .002. This was due to wartime production, and only fair accuracy can be expected. The rifling has the British left-hand twist instead of the right-hand twist of the Springfield.

After the war a number of these barrels were sold to riflemen as well as gunsmiths, who sold them as new barrels. Since they all had a left-hand twist, a few were detected. One in particular that I examined proved to be a Remington barrel. The party who had restocked the rifle and placed the barrel into a Springfield action excused himself on the grounds that he only made barrels for very close friends.

One firm who advertised a great deal right after the war used a number of these barrels also, but I do not know the excuse they gave for using the left-hand twist. Their price was $80 for a barrel with a makeshift rib, and $50 for a plain barrel. One man paid $80 for one with the rib; after the third shot the rib came off. Because of this unexpected misfortune, another Remington barrel was discovered, which was sold for five cents per pound.

One good feature about the model 1917 rifle is the bolt with the safety feature on the side and in such a position that the thumb of the right hand can operate it very readily. Also the turn down in the bolt handle which permits a low mounting of a telescope without the necessity of bending the bolt handle. This is an advantage over most other military rifles. The beginner will find that it has taken a considerable amount of hard work on this rifle to bring it up to the ideal he has set, but he will find he has a good rifle and he will like it better as time advances.

Figure 110 illustrates what can be accomplished with these arms to make them look more like sporting rifles. Since the D. C. M. has placed these war arms on the bargain counter—the proper place for them—the amateur gunsmith has a very favorable subject on which to try his experiments. These recommendations for the remodeling of these arms are only the foundation of the possibilities for the ingenious student. New fields will be opened for the special application of sights, both iron and telescope. New stocks will be designed, as well as special sears and set triggers, and many other improvements that cannot even be enumerated. The actions can be made to handle various calibers of cartridges as well as the standard for which it has been designed. However, with these few suggestions, I know no excuse is needed for emphasizing again the possibilities of the built-up stock as suggested in Chapter XIV.

From the amateur's point of view, it is a difficult matter to draw any radical conclusions as to just what method he will take to bring out the real merits of such a rifle. He may follow the exact instructions as given in these chapters; then again he may have better ideas, and so he may do just what he wishes, providing he does not overstep the bounds of safety.

A number of the Mauser military rifles were

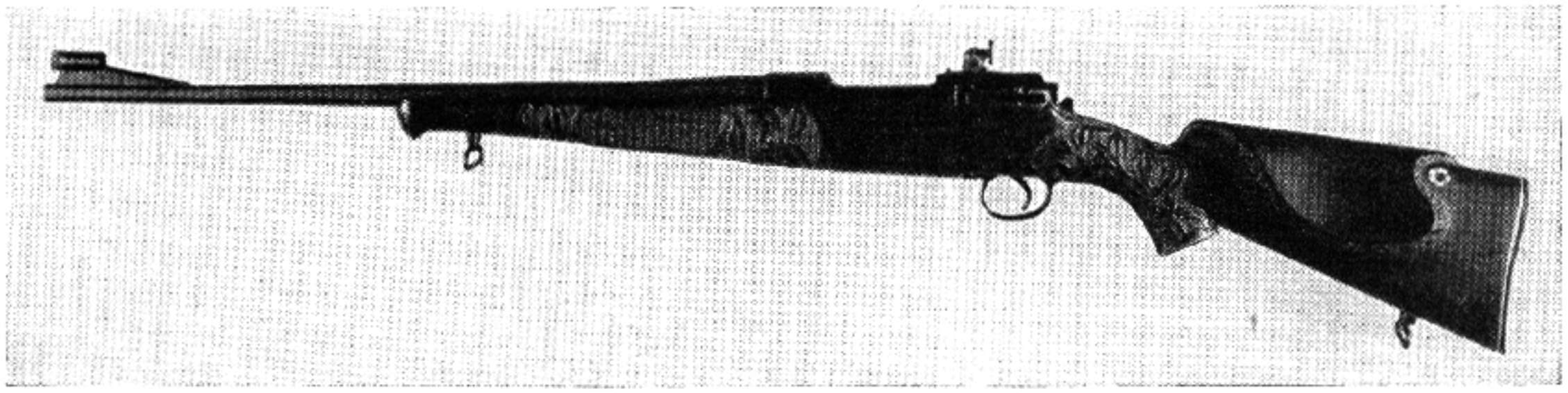

Fig. 110
An amateur's first attempt at remodeling a military rifle. A Model 1917 arm was selected, and Mr. William Clark, a very promising amateur, checkered and carved the stock as well

brought over by the returning troops. These were picked up on the battlefields and preserved as war relics. The action of these rifles is very good. In fact the Springfield is a Mauser. The stocks and barrels are useless, but a new barrel and stock can be made and you will then have a most excellent rifle for the model 1906 cartridge. It is necessary to lengthen the magazine a little, as the German 8-mm. cartridge is about 1/8 inch shorter than the .30-06 Springfield cartridge. The magazine is cut out at the rear and will allow the .30 caliber to clear, with 1/32 inch to spare. You have a magazine that will feed the model 1906 cartridge as well as in a Springfield action. The bolt head has the correct recess and takes the .30-06 cartridge perfectly. The bolt handle stands at an awkward angle but can be bent down; the under side of the knob may be ground off and then checkered or matted. A similar rifle when restocked and fitted with all the necessary trimmings will cost you $200 or more in New York. New Mauser actions cost $50, and whenever it is possible to secure a Mauser action reasonably, or even the rifle complete, always pick them up, for some day you can make them the base of a fine sporting arm.

Ross model No. 5 caliber .303. The Ross action is what is known as a straight-pull action. In other words, no turn-down of the handle is necessary. The bolt operates inside a spirally fluted sleeve, which engages into corresponding recesses in the receiver. This furnishes the locking movement. These rifles were made by the Ross Rifle Company of Quebec. Sporting models were made as well as the military rifles. The latter were used by the Canadians prior to the World War. This rifle is now obsolete, and I cannot advise the beginner to experiment with it for the reason that so many accidents have resulted from blown bolts. This was caused by an improper insertion of the bolt after removal. A simple lock can be fitted which will prevent this from ever recurring; I hesitate to fire the rifle until this has been done. There are still a number of these rifles in the hands of American sportsmen today, but they have lost their popularity because of this one fault. The rather complicated action, which is easily clogged with dirt, made it unsatisfactory in military operation.

Japanese Arisake model 1905 6.5 mm. A number of these were made up by some of the British Arms Companies for the Japanese Government during the Great War. It makes a very light rifle when restocked and fitted with better sights, and is a good serviceable arm. Very few came into this country, but any rifleman who is fortunate enough to secure one will derive good experience in remodeling it. The cocking piece resembles the Russian Nagent. It has a fine action, and a good trigger-pull can be secured.

Lee Enfield caliber .303. This is the service arm of the British Army. It must be secured in England or Canada, and is sold to members of the N. R. A. over there. This rifle is to the British what the Springfield is to us. It has given wonderful service all over the world wherever the British flag is flown. It can be made up into an excellent sporting arm when restocked and fitted with suitable sights.

All military models have a world of merit which the student should become familiar with. These arms were designed for war purposes, yet when converted into sporting arms in an experimental way, they give the beginner technical knowledge, and a foundation to carry out advanced ideas to suit some particular purpose. It is from the ideas of a number of individuals that the fine results invariably come.

The 1873 Model Springfield caliber .45-70. This rifle is one of a number which you can class as the poor man's rifle. It is still available to members of the N. R. A. and costs $1.25 plus express. It has been obsolete for a number of years. The .45-70 cartridge is still one of the best on game at short range. It has great knock-down power. The rifle has a barrel 32 inches and the carbine 22 inches in length. The military cartridge loaded by the government consisted of a 500-grain lead bullet, propelled by 70 grains of black powder. This gave a muzzle velocity of 1200 f. s. and a chamber pressure of about 25,000 pounds per square inch. The barrel has one turn of rifling in 22 inches. The Winchester Repeating Arms Company and the Remington Company make this ammunition in various weights of bullets, such as the 500 grain, 405 grain, 350, and 330 grain. I would advise the student to reduce the barrel length to 24 or even 22 inches. This will give the rifle a better appearance and it will handle better. The stock can be worked over and greatly improved.

It will be necessary to remove the upper tang and weld a piece of cold-drawn steel to it as a base if one wishes an aperture sight attached. The Lyman No. 103 for the model Savage rifle will answer the purpose very well. If leaf sights are desired, these can be mounted together with a front-sight ramp. The design of this rifle permits a low mounting. The hammer can be reduced in size and improved in appearance by grinding away the back and the lower part. You can further skeletonize it by drilling holes in the wide flat part and elongating these holes with a round needle file. If one wishes to restock the rifle or inlet a comb and

pistol grip, the guard tang can be cut off at such a distance as will enable you to insert a grip at the proper place. The very wide trigger guard and the trigger can be reduced in size by filing and then case-hardening all parts. The forearm may be cut off above the sling swivel—this together with the upper tang will be quite sufficient to hold the barrel in place. If you wish to restock the rifle completely, a wide band with a swivel bow can be fitted in the proper location.

Save the end of the barrel which you have cut off and make an auxiliary chamber out of it to shoot the .45 caliber Colt single-action ammunition. The .45 caliber cartridge for the single-action Colt revolver measures .472 in diameter and is suitable. Chamber the end of your auxiliary to this cartridge size, counterboring it so that the head comes flush. Then turn the outside to the size of the chamber. The auxiliary will be of the same length as the full-sized case. As you have a considerable length of barrel left over, it is best to make two or three of these auxiliary chambers to use in place of the heavy-loaded standard cartridge. This sub-load gives a very fine accuracy at short ranges and also gives the user practise in locations which should be impossible with the standard cartridge.

As this rifle action was designed to make it possible to convert existing muzzle-loading arms into breech-loaders, it can be turned back into a really fine muzzle-loader. Cut the breech off where it screws into the receiver and fit the upper tang or a new breech plug into the barrel. Make a nipple holder and a steel nipple from tool steel. Harden and draw the temper of these to a dark straw. Fill in the space formerly occupied by the receiver with walnut and glue in place. Re-bed the barrel into the stock. You will need to retain the full-length stock so that you can reshape the stocking swivel and leave the ramrod in its present location. Anneal the hammer and drill out the end in cup shape for the percussion cap. Lighten the hammer as described in the instructions on restocking other rifles; also the trigger guard, trigger and tang. The butt stock can be altered to suit your ideas. One trouble you will experience is in locating the nipple in the nipple holder. It is necessary to heat the hammer and give it an offset to the right, so that the hammer will strike the center of the nipple instead of at the joint between the holder and barrel. The Lyman Gun Corporation will furnish a bullet mould of correct size, or you can make a suitable mould from the instructions given in Chapter XXIII, Volume II.

The making of a .45-caliber muzzle-loading rifle will suggest to the student the idea of making up a muzzle-loading shotgun from this rifle. It can be made either 12, 16, or 20 gauge, obtaining and adapting a model 12 or 97 Winchester shotgun barrel. The forearm will be cut off to a suitable length and a forearm stud made long enough and wide enough so that a ½-inch hole can be drilled through and tapped on the under side for a 10-32-inch screw. The large hole is drilled so the ramrod will pass through. The 10-32-inch screw with a fillister head is to hold the forearm in place. The stud must be secured in a shallow dovetailed slot in the barrel, or if you are competent to sweat it on, it will be better secured this way. Before cutting out the channel for the barrel, bore out the hole for the ramrod. If you wish to put in a brass tube, allow for this. Figure 111 will show what is possible to accomplish in the making up of these arms.

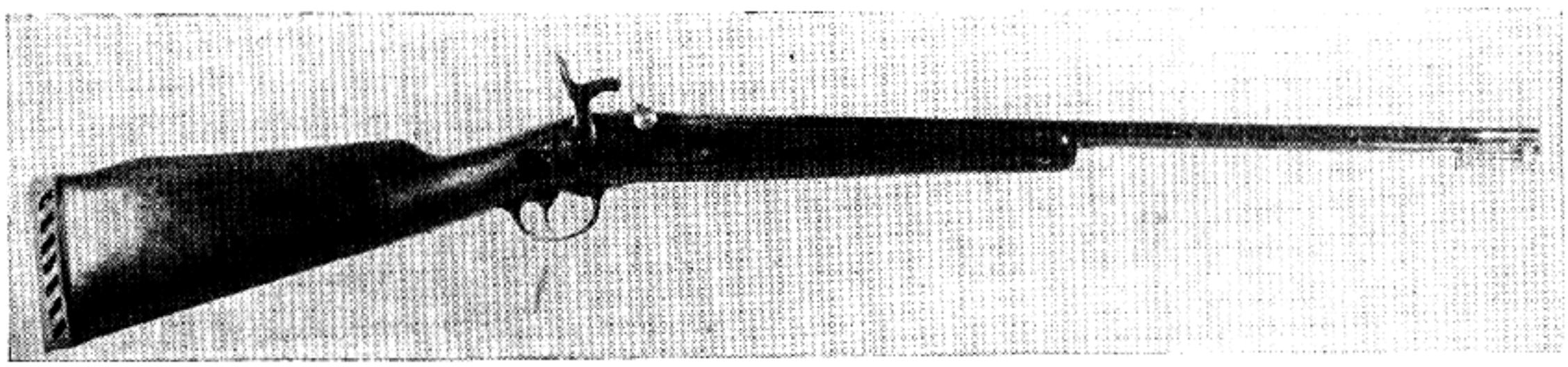

Fig. 111
Muzzle-loading shotgun, 20 gauge, made from a caliber-45 Model 1873 Springfield. A Model .12 Winchester barrel was used, and a special breech plug imbeds the tang in the handgrip of the stock

The reworking of all military arms gives the student better material to work on than he would secure with any factory-made arm constructed to meet the demands of the general public. These are really wonderful materials to work upon. The same is true of the various single-shot actions which are in obsolescence. It has become impossible to secure any ammunition for some of these,

out with new standard barrels, chambered for modern ammunition, you have the basis for a modern rifle.

The Sharps-Borchardt, the Ballard, Winchester S. S., Sharps, Remington-Hepburn, Maynard, Peabody, etc., are all well known and are all good. There are also some German, Swiss, and British single-shot actions; whenever the student can run across such actions at a reasonable price, it will be well to secure them, this holds good with all the military arms. In this way you will continue to gain experience which will carry you along into an advanced stage of finer gun-making.

CHAPTER XVII

Fitting of Sighting Equipment

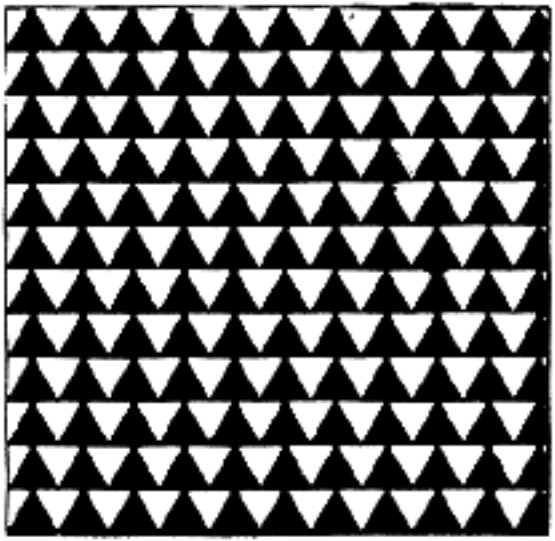

CHAPTER XVII

Fitting of Sighting Equipment

SIGHTS are for the purpose of facilitating the most accurate aim on a rifle. The selection of appropriate sighting equipment is, I believe, one of the most discussed topics among the shooting fraternity, for in this almost infinitesimal part of an arm lies the responsibility of true aim. It is also because of this that when marks vary, the shooter is most ready to jump to the conclusion that the error lies entirely with the sights. A trip to the oculist often proves enlightening and will save the student much trouble before he blindly endeavors to put his entire sighting equipment through a metamorphosis; that is, unless the fact that his sights are altogether at fault is very apparent.

When a rifle is equipped with specially made sights rather than the factory standards, two essential points should be taken into consideration: whether the rifle is to be used for target work or game shooting. Sighting and holding for woods or open shooting requires adaptation to the purpose intended and is an entirely different kind of shooting from that done on the rifle range. The latter requires careful aim, the gentle trigger squeeze, then the fired shot, whereas the game shot or woodsman, a man who is accustomed to the open, will not hesitate but fire instantly as soon as the rifle is brought to his shoulder. When we analyze the situation, the woodsman's training must enable him to hit swift-moving game—deer, moose, elk, bear, etc. The target shooter who is a good holder and proud of his record on targets at 100, 600, and 1000 yards will often miss an elk or moose at 100 yards. He is too slow and cannot see the sights plainly against the dim figure of the animal. Likewise, the woodsman will make a disgraceful score at the targets.

There is an endless variety of sights, ranging from the most simple types to those rather complicated in design. They are classified as aperture, open, and telescope sights. Originally there were only two, namely iron and telescope sights. This was sufficient when only speaking in terms of the target shooter, or from the military standpoint; but we must now consider the hunter who uses open sights on fast-moving game. In the past he was given little attention, probably because of his meek and humble ways, but from now on he is to be recognized, for his experiences in the Northwestern section of the United States have put him in a prominent place.

The standard sighting arrangements on military and factory arms are very poor, but of course these are built for hard service, and therefore are not as fine or as capable of delicate adjustment as certain aperture sights used for target work. For example, the standard sights on foreign military arms are extremely poor compared to the Springfield Model 1903. Still, that sight is no exception. However, one can accomplish a number of combinations on the fixed base, after the movable base has been removed. It only requires the turning of the windage screw until the sight is completely removed from the lateral adjustment and free of the worm. Then the flat base is ready, except for the pivot lug, which must be filed off. Both front and rear projections may be used for any purpose intended or to anchor a new sight.

Telescope Sights — After one has become proficient in the use of aperture or open sights, his one ambition is to own a telescope sight for its superior advantage over either aperture or iron sights. Since the telescope is the means of securing the finest accuracy it is deserving of more attention, particularly at the target and on small game. These facts are well established where the hunting of woodchuck, squirrel, crow, etc., is the pastime of so many outdoor men. On the other hand, hunting telescopes and mounts are rather difficult things to take care of by the average big-game hunter. Where it is next to impossible to do so they are more or less worthless. They have been used successfully on long hard hunting trips, but they are usually discarded afterwards, as a slight fall or jar will put them completely out of adjustment.

There are, of course, various advantages in the use of telescope sights, but when the bounds of practicability are overstepped with these delicate instruments you can blame only yourself. They have been designed and made to stand just so much abuse and no more. The advantages of a telescope sight are that it greatly reduces the errors of aim

and allows objects to be seen more distinctly than with the naked eye. In selecting a telescope two objects are to be kept in mind; either it is to be used for hunting or for target purposes; if the latter, a high power will be practical, but for the former a low power with a clear bright field is desirable.

Open Sights — Open sights are extremely simple in form but are the quickest and most positive for game work that can be made. I refer to the fixed sights set for one range only, the rear top edge filed to form a V or U notch. There are also some without any form of cut-out except for a center line to hold the horizontal position.

If the student aspires to become a game shot and has never faced difficulties encountered in rough localities such as the Northwest, he can gain similar experiences by artificial means or wait for certain weather conditions to present themselves. He must prepare himself for such handicaps as the bright sun shining in his eyes, or the gloom of an approaching storm. Have target objects made by hand in the distance, representing different game with color arrangements similar to that of an animal. Look for objects at the edge of a forest which cause the blurring of sights. You must be able to combat wind storms, the wind being strong enough to blow the muzzle of the rifle from three to twelve feet off its intended mark, and the effects of snow or driving sleet against the face. You must be able to judge distance under all these difficult conditions, remembering that a miss is just a lost shot. It is apparent how useless an aperture sight is under these conditions, where snow or even pine needles may block the passage; or a wind gauge when you are constantly changing position. There will be times when your hands are shaky from physical exertion, and when, to make matters worse, your mark has a protective color and is seldom motionless, hardly two shots being fired at the same range.

If you wish to become a hunter, or if you are one already, experiment with open sights until you find a combination which is perfect for your eyesight. By all means do not allow target work to interfere with what you often dream about—the far-away open country near the mountains. The open sight, like the open country before your eyes, will be your most reliable companion.

Aperture Sights — Aperture or peep sights are the most accurate. They are classified separately and are seen on both target and hunting rifles. The natural aptitude of the eye to center objects enables one to do this with a greater degree of accuracy when deliberate aim is taken on any object. The advantage of this is the fact that it is possible to establish a perfect point of aim at any given distance and make the most delicate adjustment both for elevation and windage with any standard loading or special hand-loading of ammunition by yourself. On open sights this cannot be done, except by the addition of a number of leaf sights, but then accuracy is destroyed if shooting at greater ranges than 200 yards with the same sight.

It will prove advantageous to have the arrangements for fine adjustments on aperture sights, particularly for the target shooter and for men whose eyesight is not as keen as it might be. Sights which contain an aperture may be used for practically all

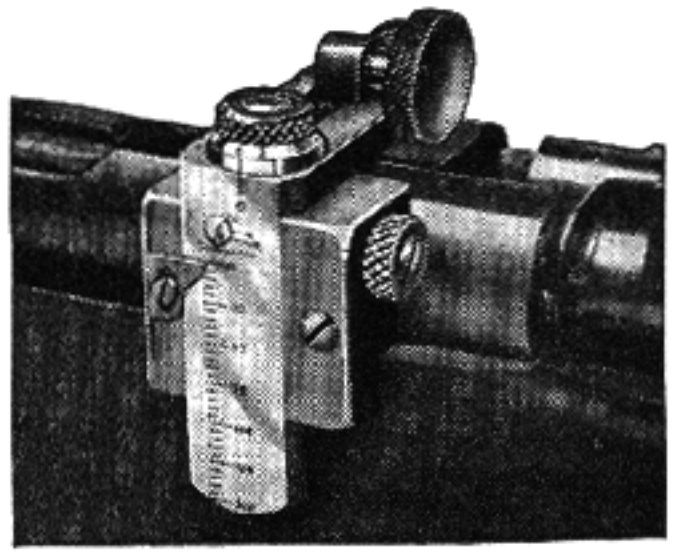

Fig. 112
The famous Lyman 48 aperture sight for Winchester Model 54 Rifles

purposes. They have become without a doubt the most popular sights for rifles of all descriptions, and for target shooting they stand supreme the world over. They are preferred by the majority of hunters on the North American continent but are not the choice of experienced hunters in other parts of the world. Great credit is due the Lyman principle of design, for these people have gone farther and kept in advance of the needs of the target shooter as well as the hunter. Their sights have become standard equipment on the Springfield sporter and also the M-1 .22-caliber Springfield, and they have made sights in the same class which are adaptable to any other standard target rifles. The British have also kept pace with the advancement of aperture sights and today the Parker-Hale design is one of the most sturdy construction, the foremost requirement for good target work where weight is not important. The new Lyman aperture sight for the Model-52 Winchester has been made on the same principle as those of British construction.

When we sum up the advantages of aperture sights for target or game (provided dangerous game

is not being encountered), it will be seen that they permit an almost unimpeded view of the target or object during aim. For this reason it is easier to aline quickly and hold the target longer with a clearer definition of the front-sight adjustment which is necessary on target arms. However, in elevation and windage, it is a detriment in the hunting field, for once an aperture sight is set at a given range for game work, it must be locked in place and left there so that it is impossible for any one to unscrew it; for if the screws rub on parts of the equipment this will throw them out of alinement.

Front Sights — Front sights are divided into three classes: beaded sights, blade sights, and globe sights. Heretofore there were only two kinds, open and globe. This classification did not take into consideration the bead sight of either ivory, gold, silver, etc., and it was rather confusing as to whether a bead or a plain blade sight was designated.

There is such an endless variety of front sights on the market today that it is rather difficult for an amateur to know just what to choose for his purposes. I dare say that in the end he will find it necessary to make one for his particular use.

The most essential point to consider in the construction of a front sight is the correct shape; second comes the clear definition at the tip or top upon the object aimed at. All front sights should be made of alloy steel. Tool steel or spring steel

Fig. 113
Lyman globe target front sight showing the nine interchangeable insertions

is good, but the alloy steels have greater elastic limits and are not as liable to bend or break even tho they are made very thin.

When attaching front sights to a base, they should always be fastened securely by such means as screws, dovetail slots, etc.; once in place, they become permanent fixtures. Whatever adjustments take place should be obtained by the rear sight. An important factor to consider in selecting a front sight is the effect of various lights on certain metals. Silver will cause more or less glimmer in bright light; consequently one so selected will change elevation and windage and the fine definition will be impaired. Gold, when given a dull finish, is the most practical metal to use in a beaded sight because of its color on an object in strong lights. It also has the advantage of strength. I do not recommend ivory beads because they are apt to be brittle and frail. They are, however, advisable on a hunting arm used for wilderness work. Another more practical substance has been found which will be described later.

It has been found that the flat-top blade sight is the only satisfactory one to use on a target rifle. The width of a front-sight blade must be so that it accommodates the eye on the object, either game or target; I have found that a blade 0.080 inch wide is the best to give the clearest definition. The width of these sights is a matter of choice with the shooter; however, the target shooter will find one much wider to his advantage.

Globe sights have been designed for the purpose of target work only. These have a protective covering in the shape of a cylinder which fits over the center post or aperture. Because of delicate construction, it is possible to have finer posts and apertures than on the open-front sight. Very satisfactory results are obtained with these sights on the rifle range, but still greater improvements are possible and probably some day one will be designed that will meet with greater approval among the target enthusiasts.

Factory Sights — Undoubtedly the job of gunsmithing most frequently attempted by the average rifleman is the alteration or substitution of the sights upon his rifle. In past years nearly all factory arms have been fitted with the cheapest and simplest combination of front and rear sights; but in the last year or so the tide has turned and one can now buy a factory arm fitted with substantial and practical modern sights. However, this question of proper sights is a much varied and discussed matter among sportsmen, and it is seldom indeed that the rifle shooter of experience or advanced ideas is contented with the sighting equipment originally on his rifle. Generally several changes will be made before a satisfactory combination of sights is fitted. Hence, in this chapter I shall dis-

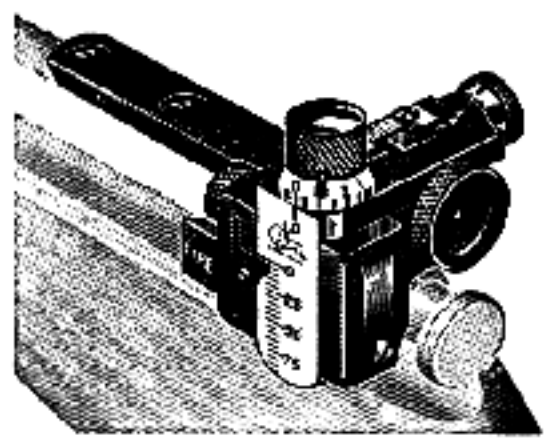

Fig. 114
The Lyman 48 sight adapted to the Model 19 and 23 Savage rifles

cuss what may at first seem elementary and trivial matters to shooters who have traveled any distance down the road called "Sights and Sighting."

The first and most commonly desired job of sight work is the one of removing the factory sights and replacing them with other commercial sights more to the owner's liking and ideas. And fortunately, as most factory sights are merely driven into dovetail slots in the barrel, it is a simple matter to drive them out again; the only danger being the possibility of bending the barrel or springing it, and this we can easily avoid. The novice who thinks this matter of bending the barrel to be overemphasized, should read up a bit on the methods by which rifle barrels are straightened.

Barrel and Tang Sights — Let us assume that you have a Model-12 Remington .22 rifle fitted with the usual factory sights dovetailed into the barrel, and that you wish to replace these with a Lyman gold-bead front sight; a Marble's folding leaf in place of the present rear sight; and a Lyman No. 2-A combination peep sight to go on the tang. Here is an excellent and most practical combination of modern sights for a .22-caliber hunting rifle.

Obtain the new sights before you touch those now on the rifle, and if you specify correctly you may rest assured the manufacturers will send you ones which will be of a proper height and fit to replace those which are being removed. Occasionally, it might be found advisable to send the old front sight in order to obtain a new one of the same height; should this be necessary, be sure to take a fine scribe and scratch a faint mark on both the old front sight and what you accurately figure to be the center of the top of the barrel; place a mark on the surface of the sight towards the muzzle. This enables you to replace the old sight when it is returned, or to determine the center of the barrel when you come to the fitting of the new sight.

The actual owner of the rifle is about the only person really qualified to sight in that particular gun to suit his own individual peculiarities of eyesight. No factory can guarantee sighting any rifle to shoot to its same "point of impact" for a customer they have never seen. In that excellent work, *Military and Sporting Rifle Shooting,* Captain Crossman has devoted an entire chapter to this important subject of properly sighting a rifle, and I cannot possibly do better than to refer the reader to this book. In the instructions which follow I am assuming that the reader is replacing the sights on a rifle already sighted in to his own style of shooting and eyesight, or one which has already been proven to be accurately sighted.

When removing or setting in the new sights, the barrel of the rifle must be supported very solidly at a point as close to the sight slots as possible. Clamp the barrel between the felt or lead jaws of the vise and clamp it tightly, letting the butt rest upon the gun brace. Should the work extend from the jaws too much, vibration takes place, and instead of moving the sight from its seat the blows applied may only upset the base of the sight, or the barrel may be sprung. Before knocking out the old sight, tap it very lightly at first to find just how securely it has been set in. Increase the blows just enough to start it loose, then with light taps move the sight on over in the slot until it can be taken out with the fingers. Always save all old sights or other discarded parts from firearms and put them in the "glory box"; one can never tell how handy these old parts may be on some future job.

Barrel sights are always driven into their slot from right to left—the barrel pointing away from you as in the act of firing; hence, old sights are driven out from left to right. The old sights should always be driven out with a short piece of soft copper rod, for there are times when a brass rod will upset and mar the ends of the sights badly, especially when they have been driven in very tightly. A piece of ¼-inch square copper rod is ideal for this purpose. The rear sight comes out in the same manner as the front; only, grip the barrel in the vise jaws as close to the sight as you can—right underneath the slot if possible.

When setting new sights into the dovetail slots they should be driven in with a piece of round hard fiber, for this material will not disfigure the edges of the sights. If the sight goes in too hard, remove and note the bearing surface on the angle of the base. Then with a three-square file having one flat ground smooth, its edges sharp, and with the correctly ground angle to fit the bearing surfaces, carefully file the front edge until it fits the slot. Be careful and try often; do not file away so much metal that the sight goes into the slot too far. Never file out a standard slot if you can avoid it; the next sight you try to fit in such an enlarged opening may be too loose.

Often the reverse conditions will exist, and the new sight is too loose for the slot. If this occurs, a small brass or copper shim under the sight base may correct it. If it is still too loose, you might peen over the edges of the barrel dovetail slightly; but this is unsatisfactory, particularly on old arms, and it is better to send for a specially made wider sight. Or you may have to resort to a gib or "Dutchman"—a wedge filed to an angle on the

sides so that this piece, when made, will be flat on top and bottom with all angles fitting to the sight and slot. The new sight is then driven in against this and should become very tight. This gib is often necessary on the older and more obsolete arms, which had their own sight standards and vary more or less, some of them calling for sights with very broad bases; a gib ⅛ inch wide or more must be made in order to use our present standard sights.

Occasionally you may receive a new sight with the dovetail base so poorly shaped that it cannot be fitted; the angles do not come out sharp and the edges are a bit rounded. Or the slot in the barrel may prove to have rounded edges. Attention must be given such conditions to see just where the bearings are; hold the barrel up against the light and see that all angles have perfect bearings against each other; otherwise the sight may work loose in time. Use a small three-square file for most of this truing up and shaping of sight bases, a file having one smooth face for safety. The ordinary tapered saw file is not suitable for this work. It pays to have one or two special files made up just for the purpose, and the three-square such as I have mentioned is the best.

When driving in the new sight, do not force it to the exact center of the barrel at first; keep on the safe side until a few sighting shots have been fired for alinement. A range of twenty-five yards is sufficient for this check-up. If the sight has been driven clear to the center mark on the barrel, and if the sighting shots then show it necessary to drive it back again, the slot may have been expanded to such a degree that we have a loose sight.

Getting back to this matter of the Model-12 Remington which we are to fit with three new sights, I may state that I have often changed the entire sighting equipment of such a rifle without the firing of a single sighting shot, and yet had the rifle shoot to the same center of impact as before. When three sights are to be fitted it is really very simple, assuming the rifle has already been correctly sighted. You first fit the peep sight on the tang, checking it for alinement with the two barrel sights already in place. It is surprizing to see how many times the mere tightening down of the new sight in the tapped threads is all that is necessary; our sight manufacturers deserve credit for the tolerances they work to. Once secured tightly and found to be at right angles, the new sight can be adjusted for point-blank range; this will be referred to later. Then drive out and replace the rear barrel sight, checking it for alinement with the other two. It may be added here that this arrangement calls for one of the folding type of rear sights, as there is no virtue in having three sights in use at one time; the only purpose in placing a rear barrel sight on in conjunction with a tang peep is for use as an emergency sight or occasionally to check the alinement of the regular sights. Normally this folding sight is kept down on the barrel. With our folding rear sight correctly fitted and in alinement, it is a simple matter to drive out the old front sight and replace the new one in line with the other two. This method always gives two alined sights with which to check, and while I do not always recommend it, it is entirely practical. Should you wish to replace the two old barrel sights with a tang peep and front sight only, the rear barrel sight is replaced with a slot blank, and in case you use the fitting method I have just outlined, this would be the last of the three sights to be replaced.

Tang Peep Sights — The trend of today among rifle shooters is for the use of the rear peep sight, generally of the Lyman design. All modern factory arms make provision for the application of such sights. The rifle comes with tang drilled and tapped with the proper thread, and these have been filled in with dummy screws, easily removed at a later day when the peep sight is installed. All the

Fig. 115
Lyman 103 micrometer tang sight. Click adjustments for windage and elevation

commercial makes of tang sights are provided with special screws to fasten them in place on the rifle for which they are specified, even to the long tang screw which on some models is used as a point of fastening. Should you be working on some old relic made before the tang sight was known, it will be necessary to drill and tap suitable holes to take such a sight; this operation will be described later.

To attach the tang sight, first clean off the tang and the under face of the sight base, and check for fit. Select a screw-driver of suitable size and turn in the two screws lightly; then tighten them up together, a turn or so at a time. Sight through

the aperture and make certain it is in alinement with the other sights, after the latter are set at zero. It occasionally happens that when this new tang sight is screwed down tightly it is out of alinement for windage; this is a vital point and one which must be guarded against. Check for this by elevating the stem to its highest point and then sight through the aperture to see if the stem is canted any to right or left. If so, you must file off one side or the other of the base until the aperture is accurately centered over the bore. When filing these bases use Prussian blue, and spot so that a perfect bearing surface will show on the side you are filing; otherwise there may be a rather rounded surface on the base which when screwed in place may cause more or less rock or spring to the sight. It is generally recommended that a strip of thin, hard paper be placed under one side of the base in order to accomplish the desired results, but the filing is a more workmanlike method. Above all, the sight must be set "square" on the tang, so that one can elevate for the longer ranges and not have the aperture run off to one side or the other.

After having everything correct and the sight perfectly square on the tang, tighten it firmly with the screws, and again check for alinement. It will now be necessary to sight in for elevation at the shortest range at which the sight will be used, and to lock the sight so it cannot be screwed below this setting. This is readily done by inserting the small pin which fits into the base of the stem, and filing off the end; the exact arrangement varies with different makes and models. It may require two or three trials before the correct amount is filed off, so go slow with the file when removing metal off the end of pin.

In practise, the fitting and adjustment of these tang sights is a most simple and easy operation. Guard against getting a sight screwed down which is not square and which will therefore change its windage when elevated; and be sure to select and use a screw-driver which fits properly into the screw slots. Nothing looks quite so bad about a tang sight as to tear out the slots on these two screws.

Occasionally the shooter with an experimental turn of mind will desire to fit a tang sight on an old rifle not tapped for such sight bases; or to use a tang sight designed for, and with a base drilled, to fit some other model rifle. This necessitates the drilling and tapping of one or two suitable holes in the upper tang strap—an operation easily done. Use the desired sight base as a templet; aline and scribe it to the proper place; clamp it with suitable clamps; and then drill and tap the screw holes in the manner described further along for the fitting of a receiver sight or for telescope barrel blocks. The operation is exceedingly simple, as the holes run clear through the tang and are very easy to tap out.

Front Sights — The method of cutting dovetail slots into the barrel proper is an old one and is frowned upon by the present-day rifleman. Today we find modern rifles being made with sight bases milled integral with the barrel; this base is dovetailed, or is slotted lengthwise, and the sight blade held in place by a pin. The Krag and Savage rifles are examples of this latter method, and such blades are easily changed. To remove such a sight, clamp the rifle muzzle in the protected jaws of the vise and drive out the old pin with a small drift. If a real job is desired, throw this old pin in the "glory box," ream out the hole a bit, and tap it for a 2 x 56 machine screw. Countersink or counterbore on one side to accommodate the screw head and file down the latter so it will come flush with the base. Finish neatly, both ends of the screw to be flush with the base, and if necessary deepen the screw slot so that at any future time it may readily be taken out and the sight changed.

The Springfield Model 1903 rifles come equipped with a front sight fitted in a movable stud which goes into a dovetailed base; an excellent design and one easy to replace with no possibility of injuring the barrel. New movable studs are easy to obtain, and there are a number of fine target and hunting sights on the market which readily replace the service blade. Occasionally we pick up a pre-war Springfield with its front-sight stud perched out to one side in order to zero the rifle; this can be remedied by obtaining a new stud, fitting it in the center, and then drilling it by inserting a drill through the screw hole already in the fixed stud. This gives a smooth finish when we look over the sights, and all zeroing can be taken care of by the adjustable zero on the receiver sight with which the rifle is now undoubtedly fitted.

Fitting Front-sight Bases — Now and then we find it necessary to cut off a barrel in order to shorten it, or to repair a damaged muzzle; and this makes it necessary to arrange some provision for the new front sight. Today, the prevailing fashion is a ramp sight, but it is often the best plan to fit some sort of a base similar to the fixed stud on the Springfield, which is really a ramp sight without so much incline to the rear. I shall briefly describe the manner of fitting such a sight.

The parts required for fitting the standard Springfield front sight and base are as follows:

1 stud, movable, assembly
1 stud, fixed
1 pin, front sight
1 sight, front

Any member of the National Rifle Association can purchase these very cheaply from the Director of Civilian Marksmanship; in fact they can be purchased much cheaper than they can possibly be made.

The operation consists of starting the new stud over the end of a large barrel and boring it out to a proper fit. In most instances it will be found best to fit this stud on over the barrel before it is cut down to the new length. Tap it up as far as it will go with a piece of brass, and then peen lightly all over the encircling barrel band with a light hammer until this stretches the band so it can be forced on a little further. Continue alternately to peen and drive on the band until the sight is in its final position; it may be found necessary to strike down the barrel sufficiently to get it back to this final place. When accurately fitted in position, cut down the barrel and crown the muzzle.

This fixed stud may be either sweated or pinned in place, or both. Assemble the barrel and action, and line the sight base up vertically; then faintly scribe the necessary alinement marks. Take off band, and tin both barrel and inside of band; then sweat band back in place. Take a very small round Swiss needle file, insert it through the small hole in rear end of stud, and file off the contour of barrel surface inside this hole. Then drill out hole through stud with drill a size larger, which makes a smooth job, and drive in a pin made from a piece of drill rod. The barrel should be ready to polish for bluing.

Now that the fixed stud is attached in its new position it is an easy matter to fit the movable stud in place. All the various sight companies furnish a variety of bead or target sights to fit this standard Springfield fixed stud, and these may be inserted with no trouble whatever. In case you want to obtain a sighting line as close as possible to the bore, it will pay to obtain the regulation movable stud. Fit it in place and fire the rifle for the required height of front sight, filing off the blade until the lowest practical height is obtained. This filed-down movable stud can be mailed to the sight company with a request to send you the desired sporting sight of a height similar to the sample sent. Or possibly you may wish a blade of extreme height in order to clear telescope blocks.

The skilful workman can readily make up his own front-sight base on the general order of the Springfield fixed stud with no other tools than a hack-saw and files.

Ramp Front Sights — The use of the ramp, or inclined and matted plane leading up from the top of barrel to the sight blade or bead, is becoming increasingly popular among our sportsmen. At the present time it is possible to purchase excellent ramp front sights from the various private manufacturers. In Volume II, Chapter XIX, I describe and illustrate twelve different sight ramps which may be made, but in order to make this chapter complete I shall describe briefly the fitting of various sights to the ramp after it is made and the fitting of such commercial ramp sights as may be purchased.

The sweating or brazing of the ramp to the barrel is described in Chapter XXVI, but a brief outline of the method will be given here. The height of the ramp is governed by the sight to be used and the height of the rear sight. After this is estimated and the correct height of the ramp arrived at, the top is filed off, and the ramp drilled and counterbored to take a 5 x 40 or 6 x 48 screw with a fillister head and then marked for position on the barrel, leaving a clearance of about ⅜ inch from the muzzle. This must be set up square and clamped tightly in place, and the hole is then spotted and drilled in the barrel. Too much care cannot be taken when drilling this hole to avoid going too deeply, and possibly breaking through into the bore. The depth should take but three or four threads of the bottoming tap and the tap drill used must be ground very flat on the end so that all threads are secured to the bottom of the hole. Mark the spindle of the drill press or the drill for correct depth on this operation. After the hole is tapped, the barrel and ramp are each tinned and the ramp again placed in its proper position. Reheat just enough so the solder is melted, pull the screw up tight and allow the parts to cool.

The slots which are placed in these ramps may be for the standard factory dovetail front sights as illustrated in the Lyman catalog. A lengthwise dovetail slot can be filed in, altho the former will require a vertical milling machine or a small milling attachment. These sights are most satisfactory when the sides of the sight are filed flush with the ramp, and a sight cover made from tubing and fitted into a lengthwise slot filed to receive it, which will make a most complete and pleasing arrangement.

The caterpillar type of front sights as made by Lyman and Marble are most desirable for use in a ramp with the slot milled lengthwise, but are expensive and often troublesome to fit. They come in various heights and it is an easy matter to secure the desired elevation. Often, however, the fitting of these sights is a job for a highly skilled mechanic with suitable milling equipment, and it is generally

advisable to send the barrel with ramp fitted in place, together with a dummy sight of the desired height, to the sight maker and have him complete the work properly. All the necessary operations for this will be found in Volume II.

Caterpillar sights, and such others as are fitted into lengthwise slots on the barrel ramps, may be locked in place in a number of ways. The sight base may be made a driving fit and driven into the slot from the rear, and then recoil will tend to keep it from loosening. Or it can be filed off at the base to a sliding fit (one readily interchanged), and then held in position by one of the methods shown in Chapter XX, Volume II. These drawings are sufficient to enable any good mechanic to make either device with no trouble, but I consider the plunger catch illustrated to be the simplest to make and also the most dependable when locked in place. It can be turned from a piece of $\frac{5}{32}$-inch drill rod. Possibly the simplest locking method would be to tap the ramp for a small screw to fasten the sight.

Rear Sight Bases — Quite often it will be desirable to fit a folding rear sight on a barrel not slotted; and present ideas advise strongly against the cutting of any slots in a barrel. Some riflemen ridicule the idea of any sight in such a place, but there is so much possibility of an accident happening to the rear aperture or receiver sight that in many instances this reserve sight is very advisable. It is particularly useful from time to time as a check to see if the adjustment screws on the peep sight have been moved or tampered with by some curious bystander.

The most satisfactory method of securing a rear sight to the barrel not slotted is by means of a solid base sweated and screwed in position. This is especially applicable to remodeled military arms where it is necessary to carry considerable elevation on the rear sight in order to clear the receiver. Both width and length of the new base may be governed by the new sight intended to be used—whether a series of folding leaves or the usual factory standard.

Figure 116 illustrates a three-leaf folding sight made on a special base bored out of a 2 x 2 inch block of steel; four bases are obtained by this method. But if one is adept with a file it is easy to file one from a square piece of steel about the same width as the desired sight. After the correct contour of the barrel is filed out, the rear and front ends are filed to some artistic shape; the height is then filed down, after which the dovetailed slot may be placed in with a three-square file. A small hole is then bored in each end and counterbored to

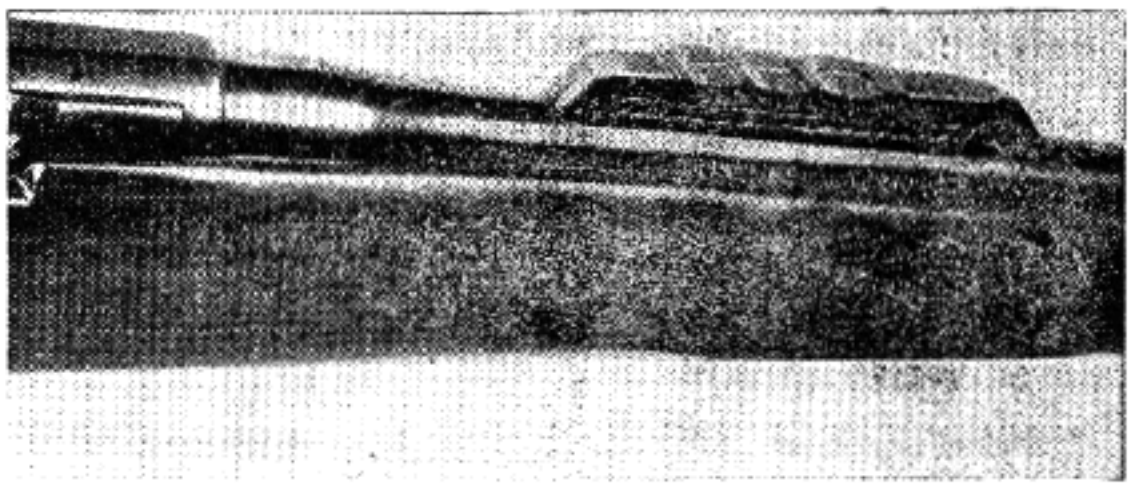

Fig. 116
Illustrating how leaf-sight bases are applied to sporting arms. This is the most practical and artistic method

take the heads of suitable small screws. Polish the base neatly and then square it up in place on the barrel; drill shallow holes for the intended screws and tap them in the same manner and with the same care as advised for a ramp front sight. After this the sight base and barrel are properly tinned and the base screwed into place and heated enough to melt the solder; the screws are now pulled up tightly and the work allowed to cool. A base fitted in this manner will never become loose from vibration.

Another method that I do not care for is to make a band to encircle the barrel, with the sight driven into a slot on top. The proper construction of this sight-base band requires a lathe and milling machine operation, and even when neatly fitted it looks rather out of place. The old Newton rifles had just such an arrangement, but the band was locked in place with a set screw into the bottom of the barrel. The Winchester Model 54 has this sight base integral with the barrel; but this base is placed in rather a low position and looks very well. However, the longer base such as I have described above, when properly fitted and sweated to the barrel, looks much better, even tho you are going to use but a single sight leaf; it appears to add a touch of individuality.

Receiver Sights — The popular sights of the day are the aperture sights which fasten to one side or on top of the action or receiver of the rifle. From an optical standpoint this is not as desirable a position as on the tang of the rifle, as it moves the aperture away from the eye somewhat and defeats the great advantage of a peep sight, which is to have it as close to the eye as possible. However, on a bolt-action rifle and on many of the lever actions it is impossible to place a sight in line with the travel of the bolt when the action is functioned. Hence the "receiver" sight, the best example of which is the well-known Lyman 48 and its many modifications for various types of rifles.

Recent years have seen this Lyman 48 type of sight being widely adapted for use on many types of rifles whose construction and action permits the use of the older tang sight. The receiver sight offers an advantage over the tang sight in that it is more solidly fastened, the aiming aperture being better supported and not having the lost motion of the long sight stem on a tang sight; and the windage adjustments are more accurate and positive.

Practically all these receiver sights are alike in principle and construction; a steel block forms the base, and this base is shaped for practically a finish fit to the action for which it is intended and on which it is permanently screwed. An adjustable elevation slide rises from this base, having a cross arm extending across the action and line of bore; this cross arm carries the aiming aperture and has adjustments for lateral travel. The adjustments on both stem and cross arm are accurate and positive, and the general mechanical construction of the sight is excellent, micrometer movements being possible for either elevation or windage.

The Lyman 48 sight is best known for its almost universal use on the Springfield rifle, and a description of the correct method of attaching it to the receiver of this arm will answer for the others. Invariably the sight fits properly over the contour of the receiver, and it is seldom necessary to do any further fitting here. Still, it is well to test this bearing with the elevation slide up to its full height and note if there is any leaning of the aperture to right or left; if so, it will be in order to do some spotting and work off the necessary surfaces from the face of the sight base.

The sight having been found to fit snugly and properly to the receiver, there remains the set-up for drilling. It is necessary to strip the rifle from its stock and take out the bolt. Nearly all receivers have a flat surface which can be laid upon parallels; this is the working surface to do all laying-out from. The Springfield, Mauser, Enfield, Krag, Remington 30, and Winchester 54 all have a flat under-surface on their receivers. Single-shot and lever-action rifles must be squared up with the sides of the action by placing the square along this action side and on the surface plate.

Having brought the under side of the sight base to a known contour and both surfaces in direct and full contact, clamp the base to the receiver in approximately the correct position, using either "C" or parallel clamps on the receiver. With a try-square on the surface plate, true up its side surface, shutting out all light from the upright blade of the square. Now test the base for square on the front side, which should be the same as the face. If it is square from both positions, tighten the clamp, and then recheck to see that the base was not moved during the clamping operation. A base "square" in this manner is suitable for a hunting rifle where the sight is seldom elevated to extreme ranges, but is mainly used for slight changes to adapt it for various lots of ammunition or different velocity cartridges.

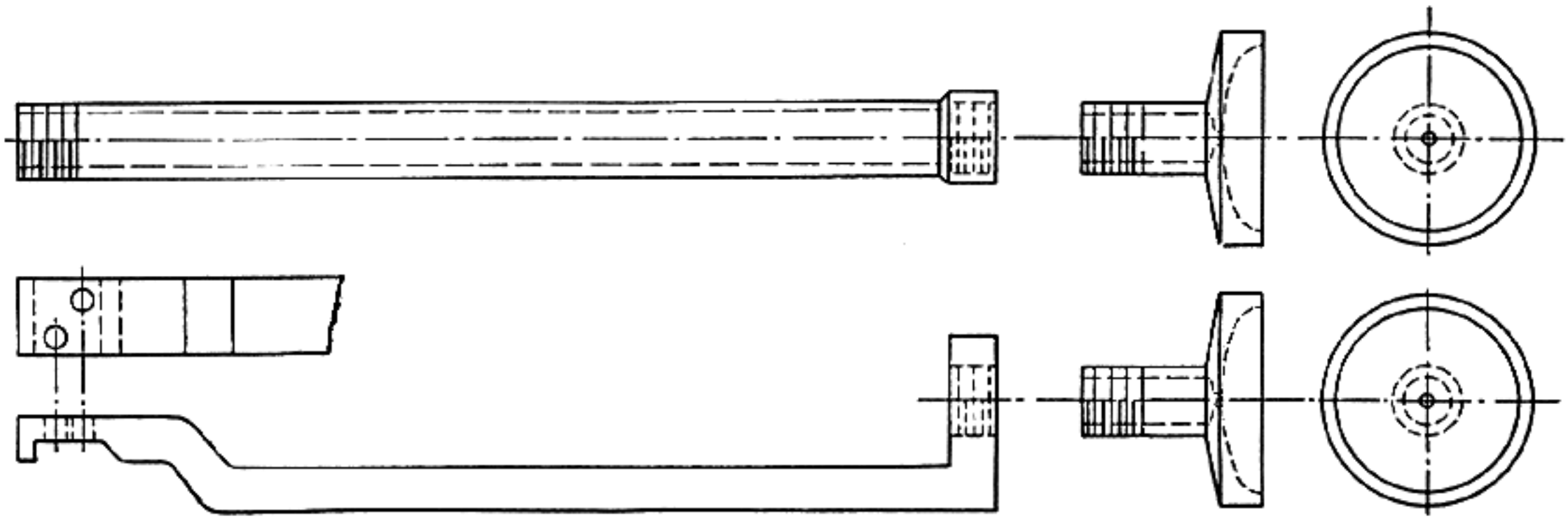

Fig. 117
Special extensions for aperture sights. Used mostly by the target shooter on caliber .22 rifles

Should you desire to use the rifle for long-range target work in match shooting with service ammunition, it will be necessary to set the sight slightly out of "square," or leaning to the left in order to take care of the "horizontal deviation" or "drift" of the bullet. However, I doubt if many owners of sporting Springfields will go to this trouble, as the regulations in most of our national matches require the use of the service Springfield "as issued." Should it be necessary that you fit a Lyman 48 sight to offset the effects of "drift" at the bullet's most important ranges, you must carry the sight base on a slight angle to the left. To secure this correct angle, get a Springfield drift

slide and clamp it squarely to an angle plate; then with a bevel protractor take the exact angle of the side of this drift slide. With the protractor set to this same angle, set your sight base accordingly and clamp it firmly in place. The sight will not look very well when slightly at this angle to the left, but it is entirely practical and appearances do not count on a target arm where the scores obtained are the main object.

Have the sight base in its absolutely correct position and clamped tightly with the parallel or "C" clamp so situated that the drill chuck will not hit in on its downward travel, or allow any chance of a slip or other misadjustment.

Whenever setting a sight or base on a receiver or barrel, it will be well to scratch a line on both ends or the corners, to verify the set-up for location; then it will always be possible to tell if the piece has moved at any time. At this stage of the operation the holes are ready to spot, drill, and tap.

Drilling and Tapping for Sight Bases — Nearly all sights and bases have two screw holes, by means of which they are fastened to the barrel or receiver with two finely threaded screws. The exact centering of these screws through the screw holes is important, and in order to do this it is best to begin by selecting a drill which will just pass through the clearance holes in the sight base. With this large drill the exact center of the hole is "spotted," after which we follow on through with the proper-sized or "tap" drill. Having the receiver or rifle on parallels or V-blocks, place it on the drill-press table and first use the spotting drill. Care must be observed to secure a center in the metal with this drill sufficient only to enable the proper tap drill to follow; a common error is to allow this large spotting drill to pass through by not remembering to change it after the center is secured. If you do not happen to have a drill press available for this operation and must use a breast drill, place the rifle in a vise between felt or lead jaws and proceed in that manner. By drilling the holes according to this method the sight or base acts as a drill jig.

Having spotted and drilled the holes as outlined above, and being certain the clamps or base have not moved throughout the various stages of the operation, complete the tapping of the holes with the sight or base still in position. By this means, the clearance holes act as a guide to square the tap, enabling the screws to be pulled up square and even against the base.

A rather common error is that of removing the sight or base after spotting the holes, then using the tap drill and not securing the same set-up. The hole is seldom tapped square, and the operation usually ends with the base out of square, which strips the screws in their holes. If this should happen, use the next larger size screw; but this time square the hole and use the correct tap drill for the intended screw.

After the tap drill has been put through the hole, use the bottoming tap, tapping down to within $\frac{1}{16}$ inch through the receiver. Tap the holes with the base still in position as outlined before, as this will allow the screws to be pulled down perfectly even and tight. After the holes are tapped, remove the base and drill the $\frac{1}{16}$-inch web out of the base so the screws will be free.

Whenever drilling with the tap drill, after having the surface spotted with the body drill, care must be taken to keep the drill alined in the center of the hole in the base. The exact depth to which you drill will depend upon the thickness of the parts you are drilling into. Always measure for the depth intended, and then mark it on the spindle of the drill press or on the drill shank; come down to this mark and no further. Naturally you must drill deep enough to secure sufficient threads for strength to hold the parts securely in position. Bottoming drills must be used and also bottoming taps to secure full threads to the bottom of the holes. Taps come in sets of three: starting taps, regular taps, and bottoming taps; or No. 1, No. 2, and No. 3 taps. When shallow holes are to be tapped it is usually best to start with the regular or No. 2 tap, and complete the job with the bottoming or No. 3 tap, thereby getting the threads cut squarely to the bottom.

With all this finished, the sight base may be screwed down into place. First, coat the screw threads with sperm oil. Further advice is to use a screw-driver of the correct width in order to avoid marring the slots in the screw heads.

Drilling Hardened Receiver — Practically all the receivers of commercial manufacture and on recent Springfield rifles can be drilled by using a high-speed drill, as the surfaces are not hardened as deeply as they were a few years ago. Many of the older Springfield receivers were so hard that it was impossible to make an impression on their surface with a drill of any kind, and it may happen that you have one of these on which a receiver sight is to be fitted. The Krag also had an action and receiver on which a drill would have no effect. When the receiver is as hard as this, the location where the holes are to be drilled must be annealed properly by heating in order to draw the hardness from around this one spot. This requires a bit of

care and caution, otherwise you may overstep matters and anneal parts of the action which require the correct heat treatment.

First locate the exact position where the annealing is to take place; this is readily done by holding the sight base in its proper location and scribing through the screw holes on the action. Polish this spot between the two holes with fine emery cloth to remove all bluing, and leave bright the location where the screws are to be placed. Moistened clay or wet asbestos may then be worked around this elongated opening, and might as well be placed about the opposite parts in order to prevent annealing the cams, etc.

To anneal, use an acetylene torch, gas burner or blow torch. With the torch, direct the flame into the opening and closely watch the color of the steel as it changes with the different degrees of heat: light straw, straw, purple, blue, dark blue, and finally a grayish appearance. At this stage the flame is turned off and the receiver allowed to cool. This treatment will properly anneal a receiver, making it possible to drill and tap with freedom; and the surrounding metal will not be injured in the least. One may now continue to set the base in place and proceed as outlined before.

If you should encounter difficulty in drilling a receiver, stop and apply the above method for the purpose of tapping the holes. There are various methods which may be employed to force a drill through toughened metal, but we must keep in mind that a piece of metal can often be drilled when it cannot be tapped. It usually happens that our tap breaks in the hole or is broken coming out, because most of the cutting edges are stripped off the teeth.

The annealing of a receiver at the place where most receiver sights are located does not harm the action. The early Springfield receivers were much too hard, and if one of these is encountered—on which a file cannot touch the surface—it is well to ship it back to the Arsenal where they can draw the temper to a point where a greater safety factor is possible. This old idea of an action being glass-hard was a set rule for the first Springfield, but they gradually came to a point where they learned that this was not required. Accordingly, in those early days the advice given was to anneal only the exact spots where the screws were to be placed. Today this may safely be disregarded and you can anneal a liberal spot between these two screw holes when you cannot get the drill to cut with freedom. On a hard receiver it is possible, after a few trials, to force a drill through; but remember that these holes must also be tapped and no tap will stand up through the operation of threading the hole.

The principles I have just outlined for fitting a 48 type of sight to the Springfield action will suffice for any other model rifle for which a modification of this sight is manufactured. On some rifles the receiver or action is not hardened, and the fitting to these is quite simple. If it is an odd model, it will be necessary to follow the manufacturer's instructions, which always come with each sight. On some of the earlier sights, such as the Lyman 33, 34, etc., it is necessary to drill one of the screw holes at a slight angle in order to have the screw fit tight. By using the base as a templet and keeping the drill and taps well centered through the screw holes it is easy to get this angle correctly.

When you have the sight properly fitted and screwed on the receiver, it will be necessary to notch out the stock in order to accommodate the sight base properly. Read over the instructions relative to this in Chapter X (Modeling and Final Shaping), as it is important not to have this notch fit so closely that recoil will work the base loose.

Cocking-Piece Sights — We now come to the cocking-piece sights, a type which reached the height of its popularity a few years ago, but which has since declined somewhat in the eyes of the rifleman. The advantages claimed for the sight mounted on the end of the cocking piece are: longer sight radius, aperture closer to the eye, simplicity of mounting, and non-interference with the shooting hand when aiming—a fault we sometimes find in a sight mounted on the tang. Also, a sight so mounted harmonizes very well with the outlines of the hunting rifle. But such a mounting also has serious disadvantages and its use is dying out. For one thing, it is a source of danger from recoil on a short-stocked or heavily recoiling rifle, particularly to the person who wears glasses. In firing from the prone position the sight may be driven back into the eye or forehead. Then the added weight of the sight seriously affects lock time and consequently ignition of the cartridge. And finally there is an odd feeling when the firing pin falls which affects the calling of the shot; one instinctively attempts to center his bead again in the aperture as it jumps forward, and this is especially pronounced in the case of the skilled shot.

However, there are men who simply must try one of these sights, and for the benefit of such we will tell about the fitting of them. A model without any windage adjustment is greatly to be preferred; the adjustable models carry too much weight for the cocking piece, and because of the fine mechanism and fitting it is difficult to keep tight the conventional dovetail arrangement which moves the adjustment for windage. Better have the lightest weight and be content with elevation alone.

To fit a cocking-piece sight to the Springfield or Krag it is necessary to anneal the end of knob and mill a dovetail slot through its center. If you have a milling machine available to cut the slot it is an easy matter to get it perfectly square by holding it in the vise 90 degrees or horizontal on the lug. The rounded part must first be faced off before this dovetail is cut, and then the base of the sight will bear against a perfectly flat surface. The qualified operator of a milling machine will have no trouble in accomplishing these operations.

This slot may be filed out if care is used; but it is usually wise to dismount the bolt and mail the cocking piece to the sight manufacturer, who is fully equipped to dovetail the knob and at the same time mount the sight properly. But you may wish to attempt the mounting of the sight yourself, in which case you must fist anneal the knob. Wrap wet rags around the body of the cocking piece and expose the end to the flame of an acetylene torch or blow torch until a very dull red appears, and then allow it to cool gradually. Before you attempt to file the slot, the face must first be filed off to eliminate the rounded end. Square this off properly and then coat the face with coppering solution. Clamp the lug in a small bench vise or against the face of an angle plate. With a surface or height gauge working from a surface plate, lay out the slot on the face to the smallest width of the angle. A small, square file is used first to rough out the center to the proper depth, or a hack-saw may be first used, which will remove even more metal, and the file will not have so much to do. Then with a three-square needle file having one face ground off to a flat, proceed to file out the angles. Try the sight often to see that the case fits evenly on the angles and does not lean to either right or left; however, if you file straight with the layout lines this should not happen. When completed, the sight should have a tight driving fit. In driving the sight base into the slot it must be clamped very close to the vise jaws and be held solidly between lead or felt; in this instance it is much better to use the lead jaws.

Figure 118 illustrates a cocking-piece sight with windage adjustments mounted on a strap and screwed on the bolt sleeve of a Springfield rifle. The end of the cocking piece was first cut off and a $\frac{1}{16}$-inch pin placed through it, the ends riveted over so that it was impossible to turn out at any time, and there welded. With such an arrangement, the sight never moves, but is held in a fixed position. This is one of the most practical methods of mounting, for it takes the weight off the cocking piece and the removal of the knob increases lock time. After the strap was screwed into position a hole was drilled at a point where the largest amount of metal was, and a $\frac{5}{32}$-inch ball bearing inserted having a small heavy spring in back of it to take up any lost motion in the bolt and sleeve. A $\frac{9}{64}$-inch hole was first drilled, and then from the top a No. 19 drill was used with the cutting edge stoned round to approximate the shape of the ball. This was used until only a small web remained at the bottom of the hole and at the same time allowed the ball to project out some distance. The top section of the hole was tapped with a 10 x 32 tap and a small slotted screw fitted. A heavy spring was placed between the ball and screw and the correct amount of tension applied by adjustment of this screw. Such an arrangement eliminates all play whatever, and should become a standard fitting when a cocking-piece sight is set on the end of a firing pin. (See Figure 100, Volume II.)

Special nuts are required when cocking-piece sights are mounted on Mauser, Mannlicher-Schœnauer, and Mannlicher-Hænel rifles. These nuts are placed on the end of the cocking piece with two small screws; and this, incidentally, is not the most satisfactory method to use. If it is at all possible

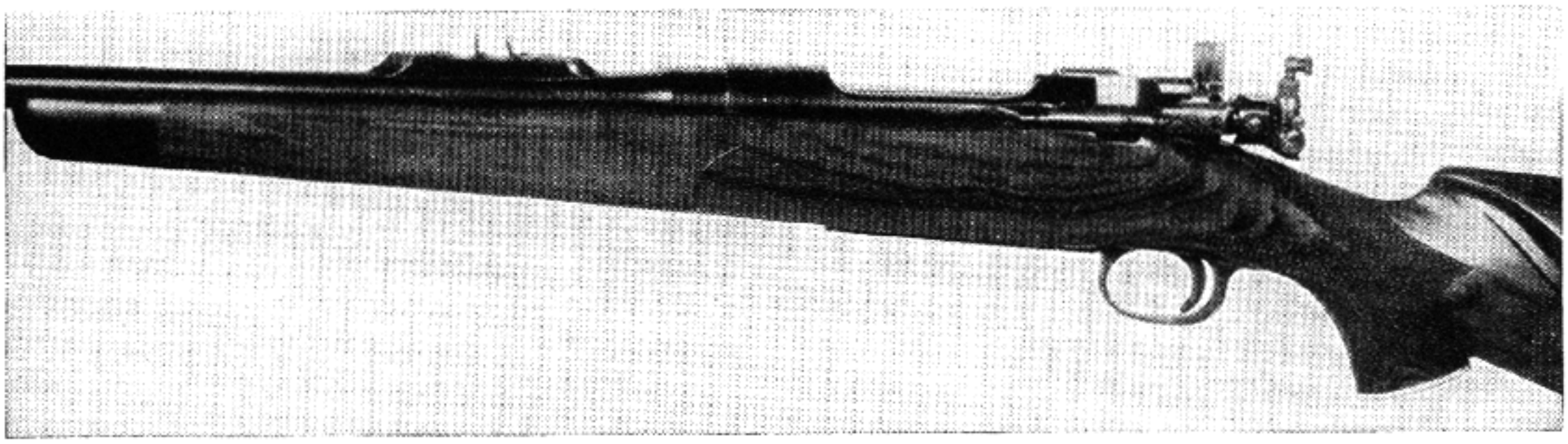

Fig. 118
Lyman 103 sight mounted on the end of a Springfield 30-03 bolt sleeve. The end of the cocking piece was cut off and welded. Strap was screwed to sleeve and held in position by four screws. Rifle designed for Mr. L. S. Canfield for African hunting

to braze these nuts in position it should be done.

When mounting a cocking-piece sight to a Mauser rifle, I first make a special nut, braze it in place, and then mill the dovetail slot for the sight. This is solid and a part of the cocking piece itself and will never come loose, as often happens when these are only screwed in place.

The Mannlicher-Schœnauer cocking piece must be bored out before the standard nut is used. In boring this, make a good driving fit and line up the sight at right angles. This is accomplished by driving in the sight half-way and then checking for the vertical position. If it is not just in line, remove the sight and turn the nut to the correct position. Drill and tap, and place the screws in position; then drive the sight to center of nut. A nut thus placed on the end of the firing pin will always stay in position, but if a loose fit is made in the boring operation, the recoil soon shoots it loose.

I have seen various home-made cocking-piece sights, and some were very good in effectiveness and in the simple manner in which they were set in place. One which I remember very well was stem-threaded with an eye on one end similar to the aperture on a cocking-piece sight. The cocking piece was drilled and tapped and this screwed in place just behind the knob. It required some effort to turn it, as the stem was made to screw in very tightly. An arrangement of this nature is often very simple to make, and when once set correctly for the necessary range will probably prove all that is required. The more simple a sight is made, and the fewer parts it has, the less liable it is to come out of adjustment. I have also noticed a number of different ideas worked out and applied to the sleeve of the Krag rifle, being fastened by one or two screws. On one Krag in particular, the owner had fastened a Newton rear aperture to the sleeve in a most novel manner. Of course, most of these sights had no means of adjustment, but then this was not required in many of them.

After having fitted the desired sight to the cocking piece to your satisfaction, it may be discovered that the gun misfires, "percussion' having been affected by the weight added to the firing pin. This calls for faster lock time; probably a stronger and heavier main spring will be needed.

Enlarging Aperture — There are certain small changes and improvements to peep sights which the shooter may find it advantageous to make, and which I have not touched upon. One of these is to enlarge the aperture in a peep-sight disc. The existing hole may be too small in diameter, and it will greatly improve your shooting to open it a trifle. This is done with a small broach or reamer such as used by watchmakers; it may be purchased from the sight manufacturers or from dealers in jeweler supplies. Such broaches are tapered slightly, and should be used from the front side of the disc, which retains a sharp edge to the aiming side of the aperture and does away with any reflection while aiming. Enlarge the aperture a little at a time, and if the broach should leave a burr around the edge, this can easily be removed by the use of a small, three-cornered scraper. After the correct-sized aperture is obtained, the disc should be heated in the flame of a Bunsen burner or alcohol lamp until the bright glitter of the metal is replaced by the dark blue of oxidation.

Loose Sight Screws — There are actually but two legitimate complaints against the modern receiver sight: First, "somebody" moved the adjustment screws "to see how it worked"; and second, the screws work loose and permit the sight base to slip and often to drop off and become lost before this is noticed. The former complaint we shall have to leave to the mercies of the fool-killer for action and correction, but the latter is a complaint generally due to ignorance or poor workmanship on the part of the individual who fitted the sight.

A loose receiver sight is invariably due either to crude and worthless tapping of the screw threads, or to the use of the wrong taps in tapping out these threads. In the first case, the threads are generally found to be "tapered out" at the top or torn away through the improper backing-out or breaking of the tap; all caused by the fact that the receiver was not sufficiently annealed to start with, and could not be properly tapped out by any one. In the second case, we generally find that a tap has been used with a type of thread or pitch entirely different from the manufacturer's standards.

The screws supplied by the manufacturers for attaching receiver sights and telescope blocks generally have finer threads than the standard machine screws—and threads that are different; these screws and the special taps as supplied by that manufacturer are the only ones which should be used in attaching his particular make of sight. In case you break these taps, better get new ones from the same source of supply, and not attempt to use the nearest size of standard tap. At best, only a few threads can be tapped out to hold, and these few threads should be tapped in a clean manner, with the sight base clamped in place and acting as a jig to prevent the lost space between the drills or taps; then you will obtain a clean, parallel hole with threads which will grip from top to bottom.

It may happen that the taps or screws furnished by the manufacturer have become lost, and lack of

time or facilities prevents the obtaining of duplicates. In this event it will be necessary to drill and tap for one of the regular commercial sizes which will fit through the screw hole in the base. Following is a table of standard threads and sizes of tap drills from which a selection may be easily made.

Size of Tap	*Diameter of Tap*	*Number of Threads*	*Size of Tap Drills*
2	0.086	48	48
2	0.086	56	48
2	0.086	64	49
3	0.099	40	47
3	0.099	48	46
3	0.099	56	45
4	0.112	32	42
4	0.112	36	41
4	0.112	40	42
5	0.125	30	38
5	0.125	32	37
5	0.125	36	36
5	0.125	40	36
6	0.138	30	33
6	0.138	32	33
6	0.138	36	32
6	0.138	40	31
6	0.138	48	31
7	0.151	28	30
7	0.151	30	30
7	0.151	32	30
7	0.151	36	30
8	0.164	30	28
8	0.164	32	29
8	0.164	36	29
9	0.177	24	27
9	0.177	28	27
9	0.177	30	26
9	0.177	32	24
10	0.190	24	23
10	0.190	28	22
10	0.190	30	21
10	0.190	32	21
11	0.203	24	19
11	0.203	28	19
11	0.203	30	18
12	0.216	20	18
12	0.216	22	18
12	0.216	24	18
13	0.228	20	17
13	0.228	24	15
14	0.242	20	11
14	0.242	22	11
14	0.242	24	10
15	0.255	18	7
15	0.255	20	7
15	0.255	24	6
16	0.268	16	2

There are various other sizes and types of thread used in gun-sight screws, so when measuring a screw always secure the correct pitch diameter. However, the foregoing table will enable you to secure a thread and drill very near to size. When in doubt, first drill and tap a scrap piece of metal and see if the intended screw fits correctly, before you drill and tap the receiver. If a mistake occurs, do not try to fit a screw which has a very coarse pitch, for it will work loose from the recoil on even a .22-caliber rifle. Standard fractional-size taps are also used in gun work, and they range from 1/16 to 1/4 inch in sixty-fourths.

Fitting Telescope Base Blocks — The fitting of telescope blocks to a rifle barrel is becoming an increasingly common operation and one which can well be undertaken by the amateur rather than sending the rifle to a gunsmith or factory which may be many days distant. It is an operation which may be either difficult or relatively simple, depending upon the tools available and the type of barrel on which the blocks are to be mounted.

With an octagon barrel of heavy weight or of .22 caliber it is not a difficult job accurately to locate and center the two blocks to the flat top, and there is little danger of drilling through into the bore or chamber. I have seen such jobs done very neatly without even taking the barrel from the stock or fore-end. But when a round barrel of light weight or with much taper is to be fitted up, the operation and results are liable to be quite different. In general, the faults commonly made when fitting a pair of blocks to a round barrel are to place them off to one side of the sighting plane, or not to have the blocks in proper alinement with each other. Also, the average first attempt or so generally results in holes not in alinement, with a block pointing off to the side; and the screw holes very loose at the top, a fault due to the use of a hand or breast drill in drilling.

However, with the proper tools a very neat and substantial job is easy to obtain, and the operation will be made very simple and easy if you possess a drill jig such as illustrated in Figure 119. With such a jig it is possible to do the entire job by hand, even using a hand or breast drill, and yet drill holes which are clean-cut, perfectly in line, and absolutely centered on the top of the barrel. In fact, if you expect to fit scope blocks to more than one barrel I would advise making or purchasing such a jig by all means.

Assuming that you have such a jig available, all that is necessary is to place this jig in position on the top of the barrel and line it up with your eye. First, insert a full-sized (No. 31) drill in one of the holes, and using this as a gauge, square the jig and center it accurately on top of the barrel; the regular sights may be used to assist in finding the true center during this operation. Or you can find the true center by means of the square and calipers; mark a center line along the barrel top, and then aline the jig to this by means of the center marks on each end. After centering, clamp the jig fast with the two C-clamps, and proceed with the drilling. A hand drill can be used with ease and yet the holes will be true and parallel, not reamed out

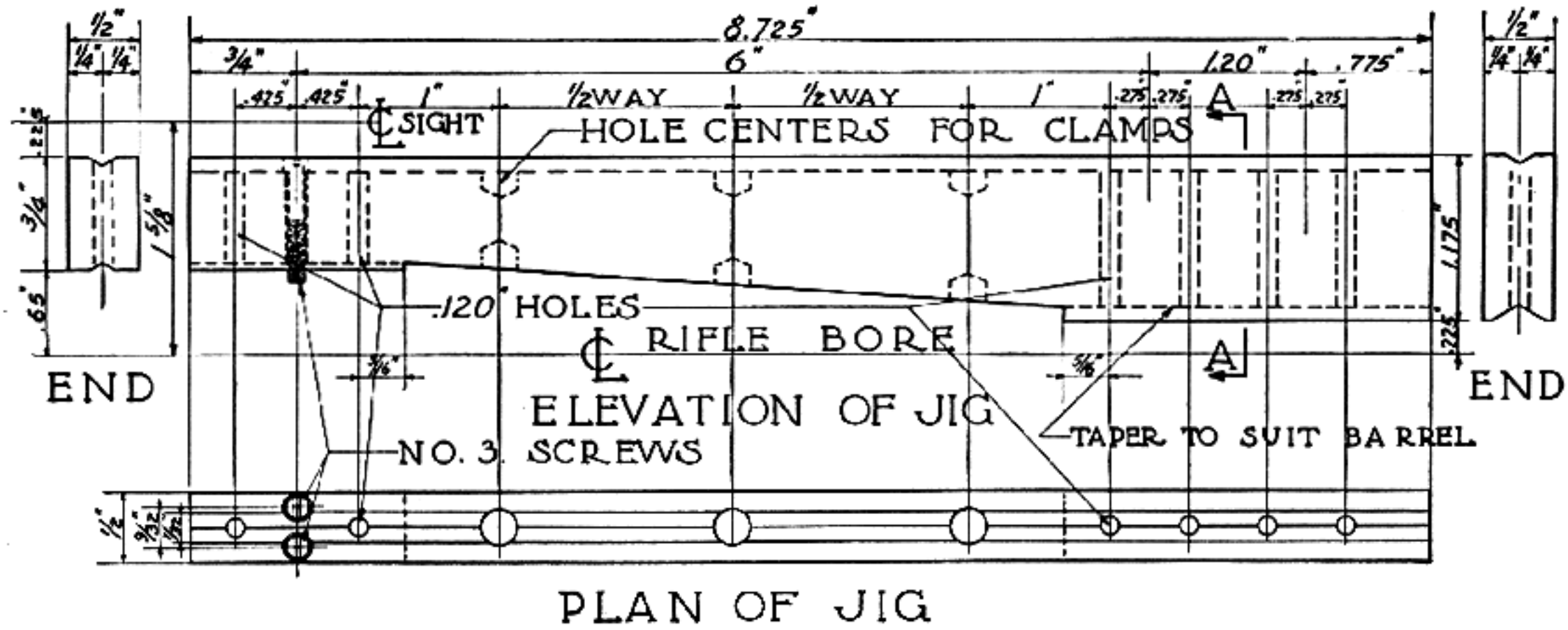

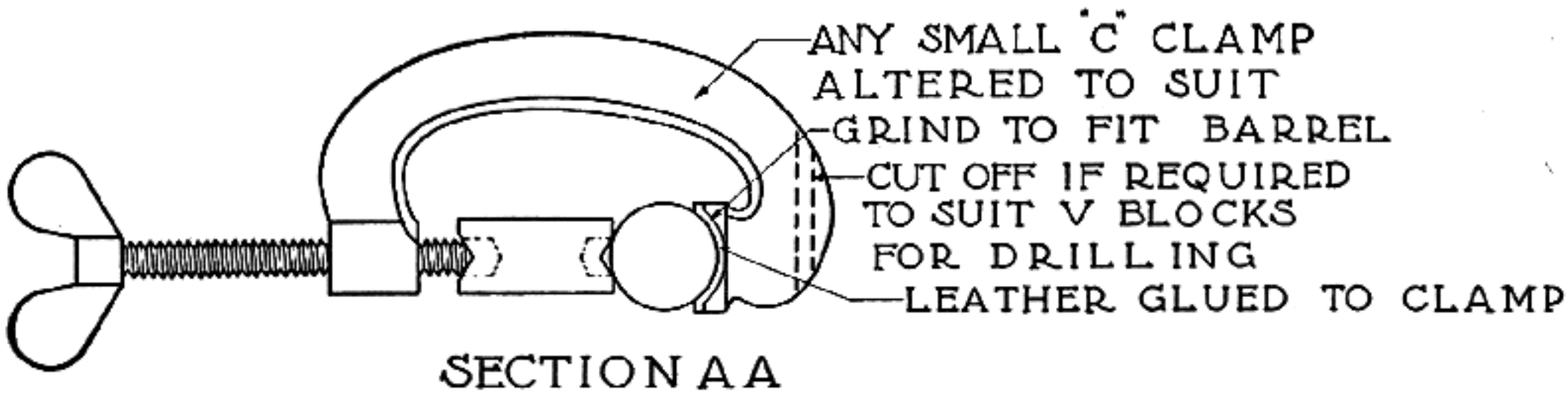

Fig. 119
Drilling jig for placing telescope blocks on rifle barrels

at the top by the eccentric motion of the drill, as is always the case when attempting to use it or a breast drill without any jig or drilling set-up.

When drilling into the barrel extreme care must be taken not to go too deeply; a stop-mark should be made on the drill shank and care be taken not to go past it. Better test with a depth gauge occasionally. You may find it necessary to fit the rear block over top of the chamber; in which event remember that in the case of a tapered or bottle-necked cartridge, the barrel thickness over chamber may be less than that further out over the bore. Always check carefully as to barrel thickness by using a keyhole caliper at the muzzle, and then do not drill down too close to the minimum thickness. I know of one case where a party drilled so close to the bore that he broke through the "web" when tapping the threads. A depth sufficient to catch three or four full threads is enough; should there be any cause for worry as to the blocks not being held sufficiently tight, they can be sweated on in addition to the screws.

I cannot emphasize too greatly the need of a drill jig for the amateur—and gunsmith as well—who expects to fit any of his rifles with telescope blocks. There is no more trying operation for the novice than this fitting of barrel blocks for the first time; but with a jig of this nature the entire operation is simple and may be performed with only the jig, taps and drills, and a common breast or hand drill. The jig illustrated in Figure 119 is fitted for drilling holes spaced 6, 7.2, and 8.2 inches apart, these being the distances invariably in use on the target rifles today. The flat side of this jig is for use with either an octagon or round barrel having little or no taper, while the opposite side is intended for use in the case of a round barrel with an extreme taper such as the Springfield, the two leveling screws being helpful at times in obtaining a square set-up. The making of such a jig is easy, provided you have access to a shaper or milling machine, or it can be purchased. With this tool the amateur can readily attain a considerable degree of perfection and at the same time is enabled to mount his blocks with the rifle assembled and in its stock.

If you do not happen to have a drill jig to locate the holes correctly in the barrel, it is necessary to undertake the rather extensive set-up or laying out method. First strip the barrel and receiver from its stock. Two squares and a surface plate are needed in order to aline the sights; if you do not have a surface plate, provide some long, true sur-

face in its place, such as a large piece of heavy window glass or a large planed board. Place the barrel and receiver on this, the barrel resting in V-blocks. It is first necessary to get the barrel and receiver at a perfect right angle to the plate, and in the case of most receivers which have a flat under-surface, one V-block may be dispensed with and parallels used. Two squares are used; one with its heavy end resting on the receiver flat and the thin blade pointing down, while the second square is resting upon the surface plate. The barrel is then rotated until the two thin blades of the squares block out all light, which shows that both barrel and action are now in a vertical position.

Having once placed the barrel and receiver at right angles with the surface plate, this position must be absolutely maintained throughout the operation or until the telescope block is securely fastened with a parallel clamp in its correct position. This is readily done by clamping the barrel to the V-block. Clamps are furnished with each set of commercial V-blocks. This is shown in Volume II.

Now clamp the rear telescope block at its approximate location, using a parallel clamp; this clamp is not screwed very tightly at first. Place your small square on the top of the block, and have your second square on the surface plate to come up and meet the blade until all light is shut out. When placed thus, the rear block or base will be in absolute line and at right angles. A further check on the receiver is now in order, to see that it has not moved while all this clamping and testing is being done; then if everything is all right you can tighten up on the parallel clamp and proceed with the locating and clamping of the front block.

The front telescope block is now fitted in this same manner, after the proper distance is secured between centers. These bases are generally set 7.2 inches apart, as this distance permits adjustments which give a movement of ½ inch per hundred yards for each graduation on the telescope mounts. Another spacing between blocks is 6 inches apart, this being all the distance one can obtain with the Lyman telescope on the Springfield rifle and yet have both blocks mounted on the barrel where they belong. The 6-inch spacing gives a coarser adjustment of shots—about 0.6 inch per hundred yards for each graduation. Another common spacing is the 8 or 8.2 inch centers which are used to give greater support or to accommodate construction of some of the larger and heavier glasses, and the differences in movement of the telescope can be figured out by actual shooting on the range; it should be about 0.4 inch.

This question of distance between mounts, and particularly the exact locating of those mounts on the barrel, are matters the shooter must solve for himself. It depends upon a number of things: the exact make and model of the telescope; its power and eye relief; the position the gun will be fired from; and whether or not the glass is to be left on the gun or will be taken off at intervals and the iron sights used in its place. The eye relief is the main consideration. The more rabid target cranks often have three blocks on their barrels to obtain full eye relief, and then use the telescope in one location for the standing position and another location for sitting or prone. I shall not dwell on this matter of location of the blocks, but can do no better than to refer the reader to Captain Crossman's recent volume, *The Book of the Springfield*, where there are three very complete chapters on the various types of telescopes, their proper location and all about them.

There is one point I shall stress, however; I am a firm believer in placing both telescope blocks on the barrel of the rifle. In my opinion the receiver or action ring of a rifle is no place for one of these blocks; the receiver ring of the Springfield and similar rifles, especially, is not the place where the drilling and tapping of screw holes should be countenanced.

In a previous paragraph I mentioned leaving the telescope on the gun at all times. I find a growing number of rifle shooters in this catagory, men who do all their shooting with the telescope and who, once their glass is set, never touch the adjustments or mounting of the instrument under any circumstances other than to keep the gun shooting "to center." Despite all the good things told about telescope mounts, there are many of them which cannot be taken off the blocks and returned to place without again sighting in the rifle. There is a small item of consideration here which may help many of these shooters, and that is to locate their rear barrel mount about 2 inches ahead of the receiver and not up against the receiver, as is the usual method; provided, of course, that eye relief and length of tube permit such a mounting. The advantage of such position is that when cleaning the bore or action of the gun, the eyepiece of the telescope can readily be shoved forward over the barrel, where it will not be in the way of the operation and where the eye lens will not become coated with oil or be scratched by some cleaning fixture.

Having both telescope blocks accurately fitted and centered on the barrel, with the parallel clamps very tight, we are now ready to proceed with the drilling of the screw holes. Too much care cannot be taken in this operation; drill only to the correct depth and no more. And do this drilling with a

drill press; never attempt it with a hand or breast drill, as the circular movement or eccentric motion of the handle of these tools will result in a tapered hole; the holes will also invariably run off center. Do this operation on a drill press where the drill attains a good rate of speed, and mark the spindle so that the correct depth will not be passed. First, "spot" the centers of each hole with a drill just large enough to pass through the screw holes in the blocks (this takes a No. 27 or No. 28 drill); then finish with the correct-size tap drill, which is invariably the No. 31 drill for standard-size blocks as now furnished. On a thin-walled or very light barrel it will probably be best to drill a little short of the final depth and then "bottom" or square-out the hole with an end-mill or bottoming drill; the latter is made by grinding a No. 31 drill flat, as described in Chapter IV.

The holes being properly drilled, now comes the tapping. *Be very careful here.* If you have not previously done much tapping of threads, better leave the barrel blocks clamped tightly in position and tap the threads through the screw holes, with the blocks to assist in keeping the taps square during the operation. Use the taps furnished by the manufacturers to suit the screw threads they recommend; there should be two of them—starting and bottoming taps—altho some manufacturers furnish three taps. The starting tap as furnished will possibly have so much taper that it touches the bottom of the shallow holes in the barrel, and it may be necessary to grind off some of its point or use a regular tap for the first operation. In case you are obliged to make your own bottoming tap, this is readily done by grinding most of the taper off a regular tap.

Take the barrel and receiver off the surface plate and clamp them in the felt jaws of the vise with barrel perfectly level and block tops at a right angle; then keep your taps square and you will obtain true and clean threads. Do not try to force any of the taps. Commence with the starting tap and if possible obtain one or two complete threads with it; turn it forward a little at a time and then back it up and advance it a fraction with each movement. Be careful that you do not reach bottom before you realize it and break the tap. This is possible with a long tapered tap. When you are about to the bottom of the hole with this starting tap change to the bottoming tap and work the threads deeper, a little at a time, until the point of tap touches the bottom of hole. Care must be taken not to break the tap as the bottom is reached. Should a tap break, an unpleasant job is ahead, and you will be fortunate to back out the fragments without marring the barrel or tearing out threads. Read the instructions in Chapter IV on removing broken taps.

All four holes have been successfully tapped, the barrel clamps are now removed, and the blocks are ready to be screwed down tight. First examine the holes; there will probably be a slight burr raised around each. These should be filed off with a flat needle file, care being taken not to cut down below the barrel surface. The manufacturers of telescope blocks usually mill the under side out so that only the two outer edges bear upon the barrel, allowing the center to be free. Such a bearing gives a much better support, as the blocks can then be firmly screwed in place with no danger of becoming loose from vibration. When screwing the block in place, first screw one screw down and see if it tightens the base to the barrel; then loosen this one and bring the other down. If each screw tightens the base properly when brought down separately, bring both down tightly so that the blocks will never become loose from recoil or vibration. When trying and tightening the screw in the block, note carefully whether it begins to tighten in the threads before the head comes down in the counterbore; see if the block can be moved with the fingers when the screw is tightened. If so, take out the screw and grind a little off the end at the point, and try it again. Full holding power of the screw should be obtained, but the end should not quite touch the bottom of the hole.

To make a first-class job, the blocks should also be "sweated" or soldered on the barrel. It will probably be best to shoot the rifle before this is done; you might want to change to a front block of different height and this can more readily be done before the block is soldered. If it is decided to sweat these blocks in place, it is first necessary to secure a perfect bearing surface between the barrel and bases in order to have a proper union of the metal. The blocks must be spotted in place; place a thin film of Prussian blue on the metal and file off the high points until a perfect bearing is secured. Some telescope blocks are case-hardened, and if so you will first have to anneal them before they can be spotted, and then case-harden them again before tinning.

The blocks having been spotted to a proper fit, they are screwed in place again and a line scribed around them; then they are taken off, and the bluing within the scribed area is carefully removed by filing. This is then polished nicely and the under parts of the blocks also cleaned and polished. Bearing surfaces of both barrel and blocks are now tinned lightly. After you have placed a very thin coating of solder on all bearing surfaces, screw blocks in place and heat moderately The amount

of heat necessary should only be sufficient to melt the solder; you can do this with a small blow torch or by laying a heavy, hot soldering copper on each block until it melts the solder. As soon as the solder melts, tighten all screws and allow to cool. Blocks sweated in place by this method will never come loose from recoil.

Poor work in the fitting of both telescope barrel blocks and sight bases is usually the result of trying to aline the base with the eye, or of spotting the holes with a scriber, prick-punching the centers, and then drilling with a hand drill. The drill invariably runs out of the true center and the holes are tapped to one side or the other; then when the base is screwed into position it does not fit, or is at an angle to the alinement. Follow the principles outlined in the preceding paragraphs, and you should be able readily to obtain a neat-looking job.

As I have stated previously, too much care cannot be used when drilling for screw holes in any barrel; drill only to the correct depth and no more. However, accidents will occasionally happen to the best of workmen, and it may be that one of the holes you are drilling has broken through into the bore. The effect of this on the accuracy is very bad, and it may even be worse on the owner. If at all possible, a new barrel should be secured; but there are calibers and occasions where even this serious mistake may be repaired, provided the hole does not come through into the lands. If a screw can be fitted in the bottom of the groove, this should be done, and the end formed to the correct contour of the rifling. Considerable care and many trials at filing the radius at the end of the screw will take place before the proper shape is formed so that the eye cannot detect the repair.

Sighting In — Quite frequently, in the course of the year, there comes into my shop the individual who wants his rifle "sighted." This operation is generally amplified by instructions to "set the sight at the farthest distance it shoots flat." Now, we all know there is no rifle which shoots "flat" for any appreciable distance; but it is astonishing indeed to learn of the thousands of rifle users who still believe in this fallacy, and who also are perfectly willing to accept and use a rifle which has been sighted in by another person.

The final sighting in of any rifle should always be done by the user; at least he should check up on any alinement and setting of sights which may have been done by another. The gunmaker is, of necessity, required to verify the alinement of any sights or sight work he may do; but this should only be in the nature of a check or final test of his own handiwork. There already exists in current rifle-shooting literature any amount of instruction on the sighting in of rifles, and the brief remarks made in the following paragraphs shall be given merely from the angle of the riflemaker.

When locating or substituting new sights on a rifle it is essential that they be placed in nearly the correct position, so there will not be much work entailed on the range when the opportunity is presented for the final sighting in. The simplest and most practical method of doing this preliminary sight setting is by means of the bore-sighting gauge, illustrated in Figure 120.

The bore-sighting gauge is the most accurate mechanical means we have at the present time by which the sights of a rifle may be set without going to the trouble of actually shooting the arm. As the average gunsmith seldom has the facilities for firing small arms around his shop, a set of suitable bore gauges is an absolute necessity; not only for metal-sight work but for telescopes as well. Furthermore, a gauge of this nature will save much time and ammunition when the actual range firing is reached.

The use of the gauge is simple; the bolt is removed from the rifle, and the front or bore gauge is inserted in the muzzle. This bore gauge is almost a "push" fit, and it has fine cross-wires; it may be inserted with these wires in any position, but it is best to fit it so there is one vertical wire in prolongation with the line of sight; that is, running up and down, with the cross-wires horizontal and vertical. In the case of a rifle shooting a center-fire cartridge, this bore gauge is all that is actually required, as the rear or chamber gauge need be nothing more than an empty, unprimed case having the flash-hole true and perfectly centered in the primer pocket. With a rim-fire rifle, it is necessary to make up a special receiver gauge such as illustrated in Figure 120; this same type of chamber gauge can also be made up for any center-fire caliber if desired.

With the bore and chamber gauges in place, the rifle is clamped firmly between the flat jaws of the vise and alined upon some suitable aiming point at a distance 50 or 100 yards away. Aline the cross-hairs of the bore sight accurately upon the mark; and then, without moving the rifle, proceed to bring the regular sights into the same alinement and setting as the bore sight. Check very carefully. An exact setting to the same aiming point as the cross-hairs cover would undoubtedly cause the rifle to shoot low; hence it is well to bring the regular sights on a point a trifle *below* the cross-hairs. In the case of fitting sights to a new rifle it will be desirable to leave the front-sight blade a trifle high; then when the actual range firing takes place a

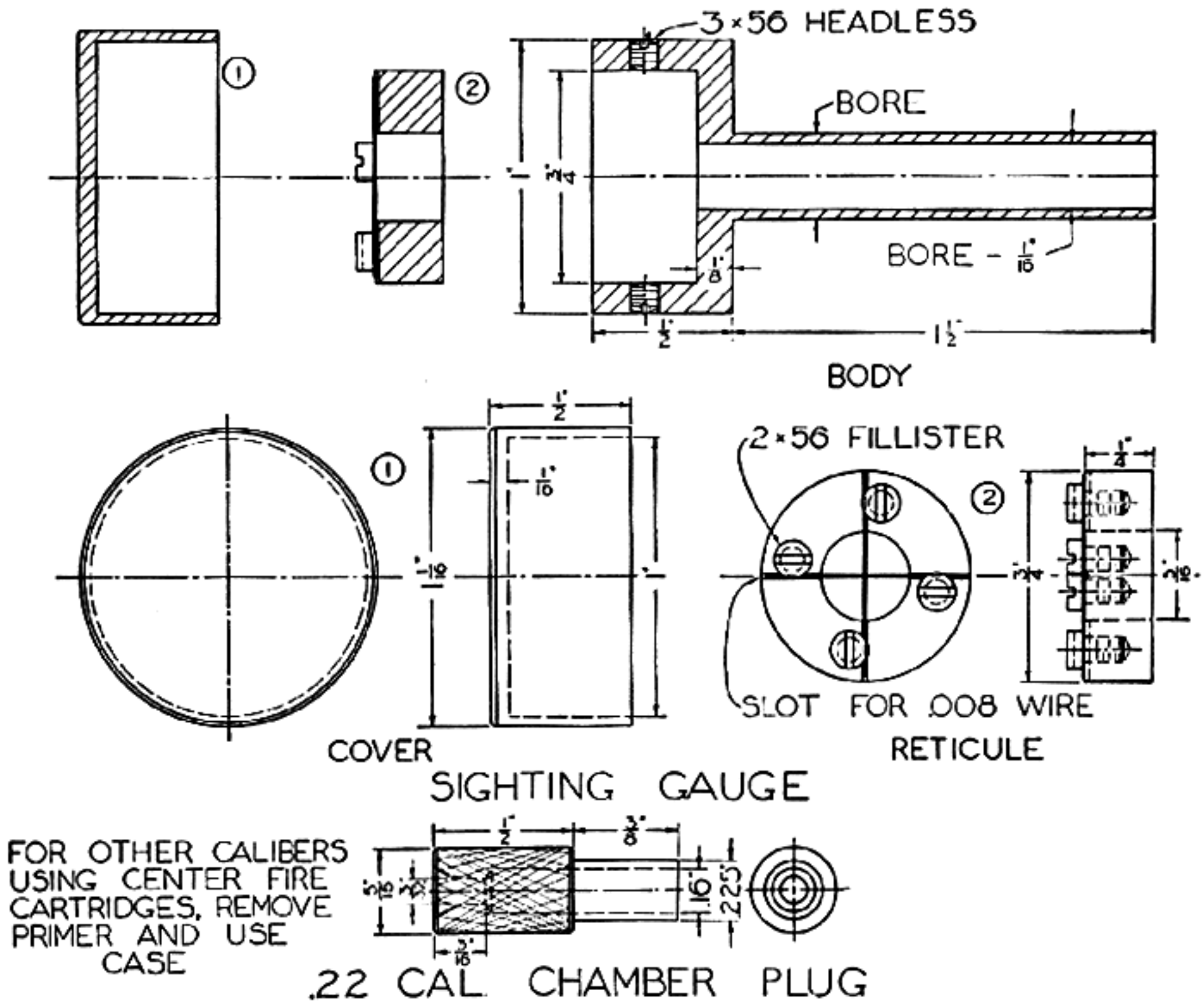

Fig. 120
Rifle bore sighting instrument

slight filing down will insure the setting being correct, and will also enable the rear sight to be set to its lowest possible position.

This set of bore-sighting gauges is of especial value to the target shooter who is also a user of the telescope sight. With the bore sight in place and the rifle wedged between sand bags on the firing line, it is a matter of but a few seconds' time, and no wasted shots, to bring the vertical wire of the aiming reticule in alinement with the wires of the bore sight; this, when accurately done, should put the first sighting shot within a few inches of the bull's-eye.

It is always advisable to fire the rifle over the actual range in order to check alinement and setting of the sights, and to give any final minor adjustments which may prove necessary. At this time we also give the sights their last settings, find their true zero, set for minimum point-blank range, etc. This work calls for a light brass hammer and a set of copper and fiber rods to be used as drifts in tapping the sights one way or another for slight adjustments. A few needle files may also be necessary in order to dress off the top of a sight blade or to deepen a sighting notch a trifle; and a reamer may come in handy to open up the aperture on a peep sight. Keep in mind the rules relative to sight movement and their effect upon the target: that the bullet moves in the same direction with any movement of the rear sight, but in the opposite direction to any movement you make with the front sight. In general, the front sight should be set firmly and squarely over the center of the bore *and then let alone;* all necessary adjustments from then on being made with the rear sight.

The exact range at which the rifle is to be sighted will depend upon its caliber and the purpose for which it is used. In the case of a target rifle, a wide range of sight adjustment will be necessary and the exact sighting can be left to the owner. But with the high-power hunting rifle the case is different, and the average owner will undoubtedly want his rifle sighted to the longest and most practical "point blank" range possible. With cartridges such as the .30 '06, 7 mm., .270 Winchester, and .250 Savage, this setting should invariably be for 200 yards; such a sighting will cause the rifle to overshoot less than 3 inches at the 100-yard range, and this is much preferable to having the setting at 100 yards, which means that we shoot about 6 inches low at the 200-yard range.

As I have said, one cannot sight in a rifle ac-

curately and guarantee that it will shoot to this same point of impact for another individual. There are differences in eyesight and holding which may prevent it, but there are a surprizingly large number of sportsmen who do not realize this fact. Hence it may be well, when you turn a rifle over to a customer who is a skilled shooter, to advise that you have sighted it to shoot accurately in accordance with your own eyesight and holding ability. In the case of the "flat shooting" enthusiast who proposes to take the rifle right out into the woods and start hunting with it, better not say anything; the arm will undoubtedly shoot about seven octaves closer to the mark than he can hold, and your advice will undoubtedly be misinterpreted—and possibly resented.

Fitting Lyman No. 48 Special Sight — When remodeling a Springfield or any other bolt-action rifle on which the wood must be cut out for the clearance of the base and slide, it is better to cut the base of the sight and slide rather than the stock. When finishing the stock, carry the lines back with the loading gate on the right-hand side of the receiver, rounding the edge well in against the action, which gives the stock an even and unbroken line. The Lyman sight should now be attached to the receiver in its correct position. Lay a straight-edge on the flat portion of the loading gate. Scribe a line upon the sight base. By setting the receiver upon parallels, a surface gauge can be used to scribe this line completely around the base, including the slide. Remove the base from the action and strip it completely by removing slide, locking bolt, spring, and indicator. The elevating screw is removed and cut to length.

The base may either be milled, shaped, or cut off with a hack-saw and filed to the scribed line. The slide can also be done in a like manner. The lug by which the elevating screw is guided and attached is driven out from the bottom cut-off section, and relocated near the bottom of the cut-off slide. First, reduce the lug to half its thickness and countersink it on the under side so that the screw, when riveted over, will give it a bearing point and at the same time a place for the expanded end of the screw to draw down the clip plunger and spring. Cut the elevating screw off, allowing for the riveted end. Turn the end of the screw so that it has a free movement in the guide lug. The end of the screw was threaded for a small nut and washer, but this now is discarded; the riveted end is more substantial.

The bottom of the slide which rests upon the base is filed off $\frac{1}{16}$ inch. The slide is allowed to come down this amount, and when the base is in position, mark the bridge of the receiver and file this portion out so that it is possible for it to rest on the face of the under side of the slide, the base, and upon the bottom filed-out section of the bridge. When the sight is in its normal position it sets well down, giving a $\frac{1}{16}$-inch lower setting of the sight, which is very advantageous.

The spring slot on the left side of the base is filed in with a thin piece of steel and held with a small screw; a 3 x 56 is the recommended size, or one near to this size. The base should be sweated to the receiver, as there is such a small bearing surface left after removing the bottom section. Those who are not in a position to do this operation may tighten the two base screws as tight as possible; but always make a thorough inspection after shooting to see that they have not come loose in the act of firing. The sweating operation makes a perfect union and obviates the fear of having the base come loose on a long hunting trip with no screwdriver to tighten it with.

By cutting down the sight in this manner there is still $\frac{5}{16}$ inch to raise for elevation, which is more than is required for adjustments on a hunting rifle. The operation removes the spring which keeps the locking bolt in the elevating screw threads, but it is always an easy matter, after the rifle is once sighted in, to lock this nut in position with a pair of pliers.

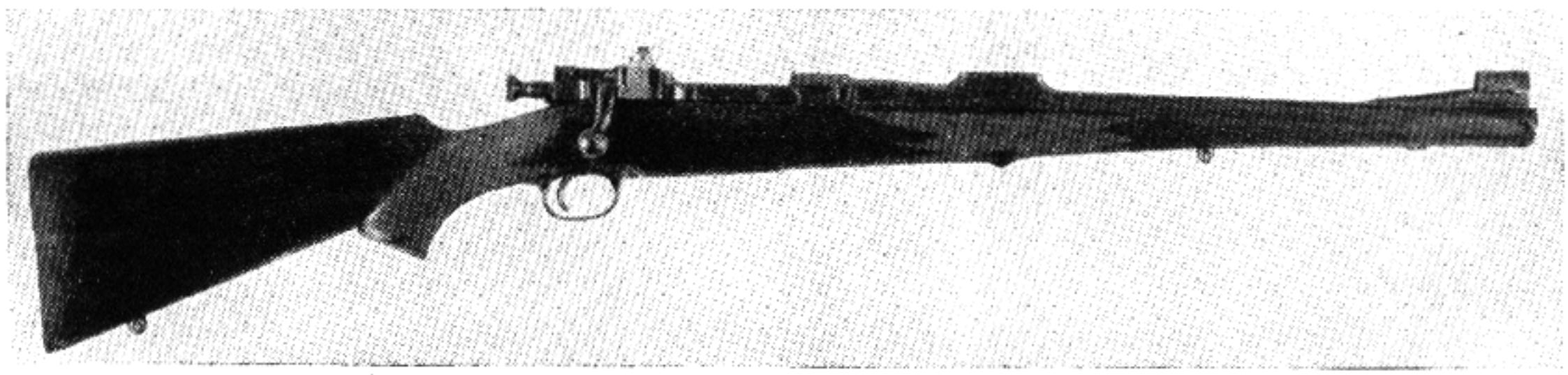

Fig. 121
Springfield Model 1903 rifle designed for Mr. Charles G. King. Eighteen-inch barrel, Mannlicher type. Note Lyman 48 aperture sight with base cut off in line with loading cut-out in action

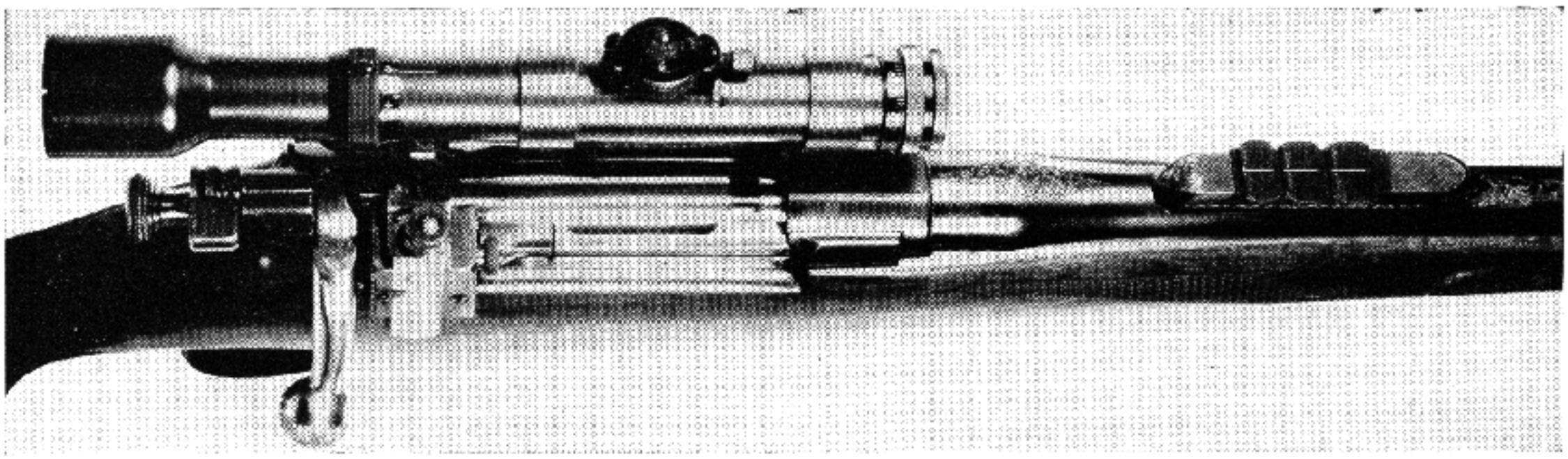

Fig. 122
Remodeled Springfield Rifle, Model 1903, with complete sight equipment. Note the leaf-sight base, and sight. Outlines blend well and are in keeping with all other lines of the design

Acquire the habit of testing this nut to see that it is never loose. Some day the Lyman Gunsight Company will make this type of sight a standard for all sporting arms. Figure 121 illustrates this sight on a Springfield Mannlicher type made for Mr. Charles G. King.

Hunting Telescope Mounts — The development of a satisfactory telescope mount for the hunting rifle is still in the experimental stage, altho we have today a wide variety of commercial mounts to select from. The most recent as well as the most promising development is in the hunting telescopes, which have both windage and elevation adjustments within the tube itself. This idea, when ultimately perfected, will enable the construction of the most simple and sturdy mounts and will do away with much of our present troubles experienced with the hunting telescope.

There are two methods employed in the attaching of telescopes to the hunting rifle: one is the receiver side mount and the other is by means of top bases. The latter was the earliest method employed; it was a crude and unsatisfactory means of attachment, and today is seldom used. The use of the side mount is so general that I shall describe only the method of attaching this type of mount.

When mounting the telescope side mount to a receiver it must be placed on square in every direction. First, set the receiver upon parallels on the surface plate and place the base fixture in position, as far back on the receiver as possible, holding it in position by two "C" or parallel clamps. The top of the plate must come in perfect alinement with the axis of the bore of the rifle; then it is possible to have the aiming post of the telescope come in the center, which gives considerable adjustment one way or the other: i.e., elevation or depression. Place the try-square against the flat side and have it come into position against the blade of the square until all light is shut out, and then tighten the clamps. Now, test it for square from the top by laying a small square over the top with the small blade down, bringing up against it the square which is resting on the fact plate. Using the same method as when setting telescope blocks in place, hold the receiver in the light so you can test the base to see if there is any light between it and the receiver. If such a condition exists, remove the base and spot it in; but as a general rule, the manufacturer has milled the base out so perfectly that it does not require any spotting in. Should it fit properly, the receiver is now ready to be drilled and tapped.

These base plates come drilled with five holes, three of which are counterbored to take fillister-head screws while the other two are for tapered dowel pins. The necessary screws and dowel pins come with the mount. Use a drill which will just fit the screw holes and spot the three holes to secure the center; then, with the right-size tap drill, continue through the metal of the receiver. Keep right on and tap the screw holes while the base plate is in position. Screw the three screws in place and file off their ends flush with the walls of the channel. Figure 122 illustrates a rifle with full sighting equipment.

CHAPTER XVIII

Replacement of Small Working Parts

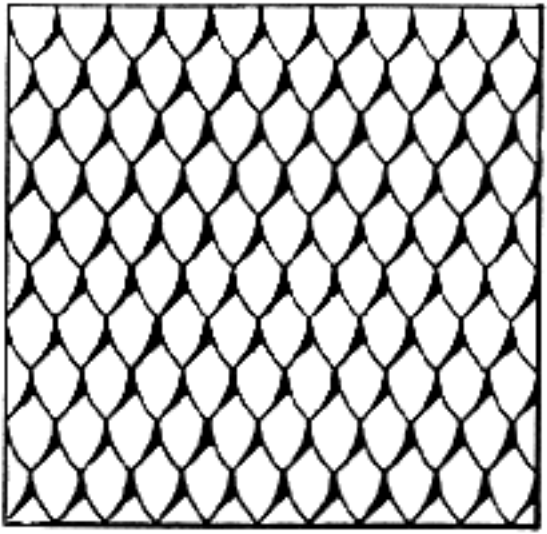

CHAPTER XVIII

Replacement of Small Working Parts

THE ultimate success or failure in fitting new parts to the mechanism of a firearm depends primarily upon two things: friction and tolerance; therefore the student should be informed on these subjects before going any further. Friction is the term applied to the resistance to motion that occurs when one body is moved upon another, or, as generally defined, "that force which acts between two bodies at their surface of contact so as to resist their sliding on each other." This, of course, is applicable to the working parts of a firearm. Tolerance, as we generally know, means endurance; but technically it is used to denote the maximum and minimum size between two given diameters or the greatest dimension allowable on a given part. Tolerance is the allowable difference in which two separate bodies will work in harmony with one another without undue friction.

Prior to and during the World War the standard on all small-arm gauges was a given size with no variations of plus and minus to work to. Such close measurements on a gauge, of course, meant the most rigid of precision work, even tho there was 0.006 inch difference between the maximum and minimum diameters on the pieces to be gauged. Consequently such a system slowed up the production of gauges right at the time when they were most needed in the manufacturing division. This necessitated replacing the old standard with a manufacturing tolerance for the small-arm gauges. It was later adopted for all gauges and is today the standard for all instruments for measuring component parts.

There are several laws of friction which should not be overlooked by the student. These are as follows:

(1) For low pressures: the friction is directly proportional to the normal pressure which becomes abnormally high, and the friction increases at a rapid rate until seizing takes place.

(2) The friction both in its total amount and its coefficient is independent of the areas in contact, as long as the total pressure remains the same. This is true for moderate pressures only. For high pressures this law is modified in the same way as in the first case.

(3) At very low velocities the friction is independent of the velocity of rubbing—as the velocities increase, the friction decreases.

After comprehending these laws you can determine the tolerance for nearly all the working parts of a firearm. Where a surface comes in contact with another surface and they travel against one another, both should have a hardened surface, highly polished and well lubricated. This reduces friction to a minimum, whereas if the opposite condition should exist, the retarding force will increase friction to such an extent that the operation of the parts becomes sluggish. When new parts are ordered from the factory they are usually slightly oversize and in a number of instances have deep tool marks which must be removed if any point is a bearing that would cause friction.

In the manufacturing of all tools, gauges, dies, etc., also the making of repair parts, a finish is placed on the essential working parts and all other surfaces are left in a semi-finished condition. Therefore, another dividing line is drawn because of labor cost in industry. Realizing the labor cost, you must not condemn a repair part when it is delivered into your hands. The particular piece you received may have cost you only sixty cents. But by keeping track of the time you spend in finishing this part, valuing each hour at $1.50, you would soon admit that had you paid for manufacture and labor for finishing you would have just cause for complaint. It is typical of American people to view everything in terms of dollars and cents. They are more influenced by the price of an article than its finish. The American manufacturer, always anxious to please the dear public, puts out his respective product as cheaply as possible. The dollar watch and model-T Ford are examples of this, as is the double-barreled shotgun sold for $20 and under. In every instance you are getting exactly what you pay for. The working parts are generally made from cold-drawn steel improperly hardened, and consequently the finish is poor.

When you are refitting the working parts of any cheap arm, you should first study the essential ones, remove the tool marks, and polish and harden them to the proper degree. If you find it necessary, you can either make new parts or pur-

chase them from the factory. First polish the contact surfaces in the most convenient manner and coat them with the coppering solution given in Chapter XVI, Volume II. The purpose of the copper plating is to give the exact bearing surface to be worked upon, for such points will cause the greatest amount of friction.

It may be necessary to reassemble such parts a number of times to work these in the action, removing the high points until a perfect bearing is established the full width or length of the part. Generally, all parts are hardened or toughened at the factory, and instead of a fine file, various India or carborundum oilstones must be used. Care is to be taken that you do not have rounded surfaces. After removing the high points, coat again with the solution when the part is assembled, so that the true contact points have a perfect bearing. Figure 123 will give an illustration of just how much care is used in one of our large arms plants in the assembly operations.

Hand fitting of parts requires particular patience and care in the installation of all lock and action mechanisms. However, the student does not get a great amount of this class of work except when making new guns or fitting special parts made for replacements. Even tho the gun is in perfect working order, duplicate some of the working parts of a shotgun of American manufacture such as the sears, tumblers, or cocking levers. If you have the machinery, also duplicate the locking mechanism. Make each part of the best steel and apply the proper heat treatment and temper. Such experience will teach you what tolerance is required between certain given points and also the points where friction and resistance are the greatest. Take, for instance, the radii on the ends of the cocking levers. Study the motion of these against the tumblers, and suppose they should have a square face in place of a radius. Such a large bearing would cause a grinding movement when opening the gun. Remove these same levers and place a perfect radius on the end which is rounded, and then install them. There will be a vast difference, since the friction was eliminated at that point. It is that which comprises the difference between a gun of low cost and one more expensive. Perfect fitting and timing was the paramount issue in the latter class.

Take a high-grade arm in your hands with snap caps in the chambers. Now open and close the action. Note the free operation of the cross lever. Bring the gun to your shoulder and point it at some object; remove the safety and fire, first right and then left. Notice the clear ringing sound as the tumblers come down on the caps. The trigger-pull is perfect. Open the gun and see what a quick movement there is of the automatic ejectors when it reaches a certain position, throwing the snap caps a distance of five feet or more. Such perfect workmanship is only found on the best guns—placed there by men who knew what friction and tolerance meant.

I knew one man who made very fine trap guns. After he made a perfect fit with the highest degree of polish possible he would place a fine film of oil

Fig. 123
Hand fitting operation on small parts as performed in the large arms plants

and rouge on the surface and with his fingers rub for hours to secure a higher polish on these metal parts. To handle his finished guns was a never-to-be-forgotten pleasure and left one speechless with admiration. But there are very few men who will pay for such workmanship in the United States, and the man I described who only turned out the best, died penniless. All his guns were on special order and made complete, at a cost of one thousand dollars. On one gun he invested two thousand dollars in labor alone.

The lubricating surface of a highly finished part is of material importance, for the laws governing a well-lubricated surface are considerably different from those applied to a poorly lubricated one. We must use an oil whose value as a lubricant depends mainly upon its film-forming capacity. Turn to Chapter XXV, and use either No. 1 or No. 2 for

the lubricant on the finished surfaces. This will allow for free movement of the bearing surfaces at all times. If the bearing surfaces are flooded with oil, the friction is almost independent of the nature of the material of the surface in contact. As the lubrication becomes less ample, the coefficient of friction becomes more dependent upon the material of the surfaces. For that reason we must have such parts drawn to a toughness that will keep them from picking up or adhering to metal until they can be lubricated again.

When the student has an unlimited amount of time and desires to do particularly fine work on the described parts, a number of lapping operations may be attempted, as described in Chapter IV. On a number of parts of a firearm it is almost an impossibility to use any form of flat lap, and when possible it is better to construct special laps of either cast-iron or copper to produce a fine bearing surface and a high finish to eliminate friction. There are a number of places where round laps can be used for the desired degree of tolerance and fit. These should be used wherever possible.

When new pins, screws, etc., are fitted to any firearm, we refer to different kinds of fits which are in ordinary machine construction. Five classes of fits are most commonly used: running fit, push fit, driving fit, forced fit, and shrinkage fit. The running, as its name implies, is employed when the parts must rotate; a push fit is not sufficiently free to rotate. The other classes referred to are used in assembling parts which must be held in a fixed position. When the allowance is smaller than for a running fit, and a moderate pressure is required in assembling the parts, the term "push fit" is sometimes used. The tolerance required for running fits on all cylindrical parts in gun work is between 0.0003 and .0005 inch. In other classes of work, however, the tolerance often increases with the diameter but may be varied according to the length of the bearing surface. As most of the parts in firearms are small, in a number of cases we must reduce the allowance, provided the arms are not of an automatic nature. On such parts care must be used to have a well finished bearing, the holes lapped, and all parts with the correct temper so they never freeze or gaul. ("Gaul" is a term used when two soft metals bind to each other.) The factors which govern such tolerance may at times have to be increased or decreased. Here is where your best judgment is used.

In the construction of parts that require less or greater labor on certain parts of firearms, no tolerance is allowed. Then we refer to a "forced fit," which means that a pin, shaft, or other cylindrical part is forced into a hole of a slightly smaller diameter. As a rule, forced fits are restricted to very few parts in gun work; as an example, on a shotgun, between barrels and action. The hinge bolt must be a forced fit in the frame and at the same time it must be free enough on the lug to allow the complete closing of the gun without any loss in motion whatever. The proper tolerance for a hinge-bolt fit depends upon the mass of metal surrounding the hole, the size of the work, the kind and quality of the material of which the parts are composed, and the smoothness and accuracy of the pin and surface of the bore. Such a hole on a shotgun should be lapped to remove all tool marks of the reamers, and the hole should be a perfect and highly polished sphere. The personal factor is much in evidence in work of this kind, but when a job is finished in the proper manner there is no come-back at some future period.

When fitting a hinge bolt to a shotgun always clamp the barrels and action tightly together. Then ream and lap the hole which will include the radius on the lug. Some advise peening the lug at the radius and then stoning it out, but this is very careless. It will tighten a shotgun for a short time, but after a number of shots are fired the gun is as loose as it was in the beginning. The only way to produce a perfect joint is by reaming and lamping the hole so that the radius on the lug and the metal is compact and free from tool marks.

As almost all the parts must rotate in some manner, shrinkage fits in firearms are rather restricted, altho in general practise a considerable amount of this is done in machine construction. Shrinkage tolerance exceeds those of forced fits. In any case the shrinkage allowance varies to a great extent with the form and construction of the part which has to be shrunk into place. This thickness or amount of metal around the hole is the most important factor. Whether parts are to be assembled by forced or shrinkage fits depends upon conditions. This practise may often be done for certain operations in the shop, but in firearm construction you will find little use for this class of fits.

In making new parts for any firearm see that all surfaces are flat and all edges square and true; whenever it is possible on flat surfaces, the parts should be lapped. When a file is used, see that a true flat surface is made and that the oilstone is used when necessary. See that you do not lift, roll, or tilt them at all, and when bringing the part down to the final finish and size, try to file, polish, or stone in one direction if possible. When testing the new parts, first try them dry. When they begin to enter, apply a small amount of oil on the surface, provided you are not using the coppering solution.

When making special parts the student will also find it necessary to make various tools, such as counterbores, reamers, broaches for square and odd-formed holes, special dies, laps, etc. Threads in many guns are different from the standard, and in a number of cases special taps must be made and even small screws must be made on a lathe. From beginning to ending of any special job in gun work you must find some means to accomplish your undertaking.

CHAPTER XIX

Hand-forging and Heat-treatment

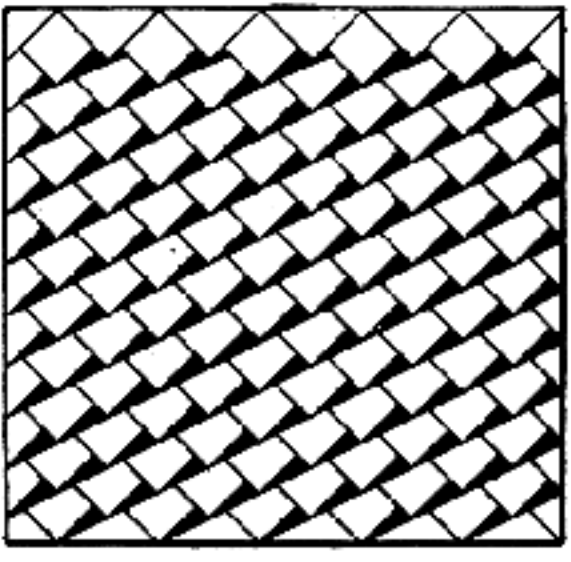

on the inside plate. These will be used to control the flow of air. Also, in a convenient location, attach a damper so it will be possible to control the flow of air to the furnace. Tap the top and bottom of the fan chamber and fasten brackets so that it will be possible to clamp the blower in position.

Blacksmith forges require air pressure varying from one and one-half to six ounces per square inch. Small forges with the blower close to them are adequately supplied with one and one-half ounce pressure. If the blower is farther away, have a long discharge pipe lead to the forge with many bends, even tho the latter be small. It may be necessary to carry three ounces pressure or more to overcome the friction in the air ducts. Large forges usually require from three to six ounces pressure.

If you do not have gas or regular electrical connections, you can buy a small foot bellows, which may answer very well for what gun work you will wish to do. If you expand you will need and get larger forge equipment.

A description of the anvil is given in Chapter IV. This must be placed on a solid hardwood block, and its height should be so that in standing beside it the knuckles of the hands will just reach the top surface. Tongs are of different lengths and forms, adapted to the work to be held. You will need two in every welding operation, but these will be of simple form and they will doubtless serve all your requirements.

Fuels for the Forge—Coke, coal, charcoal, oil, and gas are used as fuels for heating iron and steel for forging and welding. For general work, a coke fire is the best, altho bituminous (soft) coal is extensively used. When anthracite (hard) coal is used, it is difficult to get a hot enough fire, especially on a small forge. Coke or bituminous coal should be low in sulfur content, because sulfur, lead, bronze, or brass must not be in the fuel or fire that is used for heating iron or steel. A weld may be ruined by throwing brass filings into a fire before heating the work.

To fire any forge, cover the entire hearth with fine coal, assuming that coal is to be used, to a depth of two inches. Hollow out the center over the trap and perforated plate; on this, place wood shavings or excelsior, and light. When this begins to burn, rake a small amount of coal around the fire until it is completely covered. During this time you are gently forcing air through, allowing a steady burning of the material used to light the fire and the coal. Gradually work coal up into a mound, having a small crater in the center. The mound should be large enough in diameter and also in height to accommodate the work you wish to do. When the fire is well under way in the center, sprinkle water on the surplus coal on the hearth and around the fire. Thick yellow smoke will show that the sulfur and other impurities are burning off and producing the clean fire required to work any metal. You will find that the coal around the fire has begun to turn to coke, which burns with a clean bright fire, free from all impurities. After completion of all necessary work in the forge, allow the fire to die out naturally. When starting a new fire, all that is necessary is to remove the center, allowing the mound of coke to remain, and saving the coke produced from the new fire. In this way you will always have a supply of coke on hand which is nearly equal to any you could buy. Even poor soft coal may be turned into this form of fuel, which will answer for many purposes.

The hand forging of steel requires two different rates of heat. If the piece of metal merely requires a smoothing of the surface of the stock, the so-called "cherry-red" heat is the amount required. Smoothing is performed by striking lightly and evenly with the hand-hammer until the desired surface is secured. This same degree of heat is employed when "hammer-hardening" the steel is one of the objects. In this case, the blows of the hammer must be heavier than in the former case.

If the forging is to effect a material change in the shape of the object, the rate of heat must be increased to what blacksmiths call the "white-flame heat." The hammering also must be much heavier.

Welding — A "welding" or sparkling heat is required in this process; it is a much higher degree than forging heat. To get this heat the metal is brought nearly to a state of fusion; this condition is detected at once by its sparkling and its glazed appearance, showing that the iron or steel is on the verge of melting. As soon as the two pieces to be welded together have both attained this temperature, they are taken from the fire with the greatest speed, and the "scale" or dirt which would hinder the incorporation is scraped off. They are then placed in contact at the heated point, and hammered until a perfect union has been effected and no seam or fissure remains visible. If the first effort fails to unite them sufficiently, they must be reheated and rehammered.

The fire for welding, if coal is used, should be free from sulfur, and the iron or steel while heating should be often taken out and sprinkled, at the point of the greatest heat, with powdered glass to which powdered clay has been added. These applications tend to prevent the iron from burning,

CHAPTER XIX

Hand Forging and Heat Treatment

FROM the days of Tubal Cain the smith has occupied an important place in human society. He even has a place among the gods in the old mythologies. He made the most indispensable things, the things that differentiated men from animals—tools—and the tools made everything. Probably, after fashioning the simple tools of husbandry, his next task was the implements of the chase; thus our modern gunmaker is of his own race and kindred.

Personally I regret the passing of the village forge and the stalwart blacksmith playing with fire. The rhythmic music of the anvil and the coruscations from the smelted metal have inspired and cheered men, poets, and children of all ages. What is there in a car and a garage that compares with the horse and a smithy?

As a boy the blacksmith's shop was my house of magic; here I got the first taste of what was destined to be my life's work. Is it not remarkable how much the open mind of the child absorbs? What I saw Mr. Berthelson do and what I heard Mr. Berthelson say in his kindly answers to my innumerable questions are still a part of the store of information that I am passing to you.

The fire and anvil work required in the fabrication of the hand-made gun, or perhaps I should say those parts of a gun that we must fabricate to obtain, are not beyond the capabilities of the man who has been game enough to tackle gunsmithing. There are certain basic principles that govern the manipulation of hot metals; these must be known and practised, and so in this chapter I am going to tell you the theory of it—you will have to acquire the rest in front of the forge.

In this machine age, the parts comprising a firearm are mechanically produced in multitudes of ingenious processes. These parts are finished to a remarkable accuracy so that the hand work in assembling them is very little. These parts, in all commercial arms that are at all current, are obtainable from their makers; in your repair work you will always be wise to buy these parts rather than to attempt making them, as their cost is only a fraction of the cost of labor and material your hand work would entail. However, arms soon become obsolete, new ideas are constantly sweeping them into discard, and repair parts become unobtainable. Here is where your knowledge of forging becomes invaluable, for old guns like old friendships are long retained and must be constantly renewed.

The parts that require replacement are naturally those which have the hardest wear or those which from their location are most susceptible to accidental injury. Hammers, springs, guards, tumblers, sears, triggers are some of them.

In addition to the working of metals, there is another phase which finds its place in this chapter, and that is the heat treatment of steels, their hardening and tempering. This is only second in importance to the metal itself.

Blacksmith Equipment—The equipment for forging consists of a forge, an anvil, tongs of various sizes and shapes, hammers of different weights, and cutting and forming tools which attach to the "hardie hole" in the anvil, and a "slack tub" for quenching. The kind of forge you will have will be determined by the amount of use you will have for it and the fuel you will have to use. If gas is available, it will be an inexpensive purchase, or one can be easily constructed out of junk material. It will have to be equipped with a blower or bellows so that we can get an air pressure of about four ounces to the square inch in order to get welding heats.

Let me describe a simple home-made forge which will answer almost every purpose and cost very little money. It is made from an automobile brake drum picked up in a junk yard. The legs are made of angle iron and the center is built up of fire brick and fire clay. This particular one is made for gas. If it were designed for coal it would have a trap in the center opening where the air-pipe comes in. For the blower an old vacuum cleaner is used.

Strip all the parts from the cleaner, and where the dirt bar is attached, attach a sheet-metal tube, this to be connected to the air inlet of the furnace. With a hack-saw remove the wide floor intake, care being taken not to cut into the fan chamber. Over the fan chamber intake, attach a plate with four ⅜-inch holes so they will match with the holes

and they assist adhesion when the two pieces are brought into contact at the moment of welding.

Classes of Welds—Welds are classified by the way in which contact points are formed prior to making the weld. The welds ordinarily made in hand-forging practise are the scraf weld, butt weld, lap weld, cleft or split weld, and jump weld. They are shown in Figure 124. It will be seen that the surfaces, in most instances, are rounded or crowned. This is done so that when the heated parts are brought together they will unite first in the center. Any slag or dirt which may adhere to the heated surfaces will then be forced out as the welding proceeds from the center outward. When making a lap weld, the hammering should begin at the center in order to work the slag out, as the faces in this case are not rounded. When forming a weld it is generally necessary to "upset" the contact points—that is, to accumulate extra metal at the points by forcing the metal back on on itself. This, because in hammering you necessarily elongate. If the metal has been "upset" the elongation will not rob the metal of thickness.

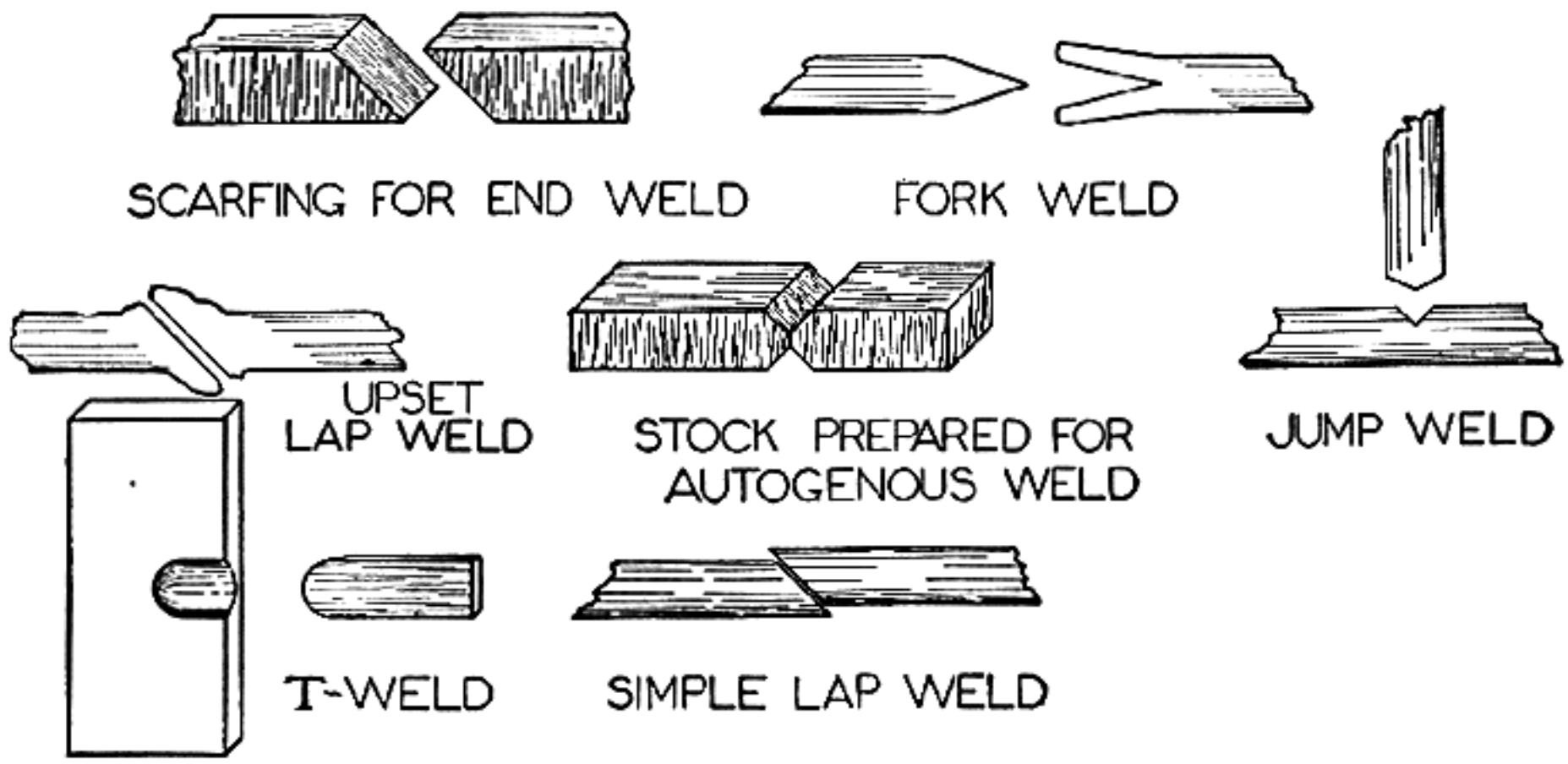

Fig. 124
Preparation of metal for welding purposes

Welding Heat—When two pieces of wrought iron or mild steel are heated until they become soft and plastic and will adhere when pressed or hammered together, they have reached what is commonly known as a "welding heat." If the ends to be heated are not hot enough, they will not stick together; inversely, if the work remains in the fire too long, it becomes overheated and burned, which greatly injures the metal. Iron which has been overheated has a rough spongy appearance and is brittle. The danger of burning is increased when the air blast is too strong and the fire is highly oxidized. It is important to heat the work slowly to secure a uniform temperature throughout the portion to be heated. With too rapid heating, the outside only may be raised to the welding temperature while the interior below is not hot enough. In this case a compact weld would be impossible.

Fluxes for Welding—Wrought iron can be heated to a high enough temperature to melt oxid, which may be forced out from between the surfaces by the hammer blows; but when welding machine-steel, and especially tool-steel, a temperature high enough to melt the oxid would burn the steel, and it is necessary to use what is called a "flux." This is composed of sand, ground glass, or borax. Since these have a melting temperature below the welding temperature of the metal, they readily dissolve when sprinkled upon the heated parts at the time they have reached the yellow heat. The flux serves two purposes: it covers the heated surfaces, which protects them from oxidation, and when molten, aids in dissolving any oxid that may have formed—the oxid melting at a lower temperature when combined with the flux.

Wrought iron can be welded in a clean well-kept fire without using a flux of any kind, except when the material is very thin. The fluxes most commonly used are fine clean sand and borax. When borax is used, it will give better results if previously burned; this can be done by heating it in a crucible until reduced to a liquid state and then pouring it on a flat surface to form a sheet. When it is cold, it can easily be broken and pulverized. Borax can be used either alone or mixed with an equal quantity of fine clean sand and about 25 per cent of iron—not steel—filings; for tool-steel a flux made of one part sal ammoniac and twelve

parts borax is recommended. When pieces are hooked together previous to welding, as in split welds, or when a second heat or "wash" is taken, a flux that will flow easily should be used. There are many welding compounds on the market, some of which are best suited for one class of welding and some for another.

This is a great amount of information for the beginner to digest, and I suggest that he practise on small pieces at first. Forge out the hooks and tongs which you will use at the forge and Bunsen burner. Make a broach for cleaning-rod eyes. Forge the ends of these rods and place the small eye in the end. You will find a considerable amount of preliminary work necessary in making special drift punches, scribers, center punches, and chisels, both for your wood-working and for your metal work. Then take test pieces and see what results you are able to secure in welding two pieces of the same material together. Welding tool-steel to machinery-steel and welding inserts of tool-steel on or in machinery-steel will be another step.

Hardening and Tempering — We now pass to the second stage of metal working, that very important phase of heat-treating: hardening and tempering. This is the process that gives to iron and steel various degrees of strength, freedom from internal stresses, hardness, elasticity, and ductility.

Heat a piece of steel to a bright cherry-red and plunge it at once into cold water. You have instantly made it as hard as fire and water can make it. It is now almost as hard as glass, and so brittle that it will not stand up under any of the uses to which tempered steel is applied. This that you have just done is the preliminary step to be used in all tempering and treating, for in doing this, we have driven our metal to a condition of fixation from which we can work backwards to any point of hardness we may desire.

This is accomplished by reheating the metal and quenching it at some previously determined point. This point could be determined by means of a pyrometer, but nature has kindly placed in our hands a ready means of determining temperature in steel by giving different hues to the cooling metal. Nine shades are readily distinguishable, and each is the index to certain well-known conditions. We list here these colors and the temperatures they indicate. We also indicate what steel of this particular hardness is suitable for:

1. Very faint yellow, denoting a temperature of 430 degrees Fahrenheit. If plunged into water at this color, the piece will be very hard, having a temper admirably suited to draw dies, bullet dies, bullet swages, forming dies, and reamers.
2. Pale straw color, 450 degrees Fahrenheit. Still very hard and suitable for the faces of hammers, forming dies, and counterbores.
3. Full straw yellow, 470 degrees Fahrenheit. Various forming dies.
4. Yellow brown, 490 degrees Fahrenheit. Threading dies for tool steel, piercing punches, gravers, turning tools, knurls.
5. Brown with purple spots, 510 degrees Fahrenheit. Wood-working tools. Most of the parts in shotgun locks, with the exception of the spring, threading dies for general work, taps ¼ inch and under.
6. Light purple, 530 degrees Fahrenheit. Butcher knives, and other flesh-cutting implements. Threading dies to cut closely to shoulders, drift punches, and small piercing punches.
7. Dark purple, 550 degrees Fahrenheit. Tools requiring strong cutting edges without extreme hardness, such as chisels and small piercing punches.
8. Full blue, 560 degrees Fahrenheit. Axes, various fine tools requiring strength, and taps under 3/32 inch. Firing pins for both hammer shotguns and single-shot rifles, also double guns.
9. Dark blue verging on black, 600 degrees Fahrenheit. Saws, swords, and the like.

Steel at 700 to 725 degrees Fahrenheit is suitable for springs.

Various other methods of tempering steel are sometimes recommended, such as quenching in a mercury bath or in divers solutions such as sulfuric acid, milk, wax, tallow, and salt water; but since the amateur gunsmith will find no use for these methods, it does not seem proper to encumber this book with anything further on the subject of tempering. We might add, however, that the hardest degree to which steel can be brought is secured by heating the piece to a dull red or cherry-red and instantly plunging it into cold mercury.

The shape, size, and requirement of the material or object will have a great influence not only on the temper required, but also on the means of acquiring and placing the temper. If the piece under process is an edge-tool of considerable bulk, only the cutting edge and the metal a little back of it is plunged into the water at the hardening, the rest of the implement being left still hot. It is then held in the light and observed closely, when the different colors, indicating the different degrees of hardness, will be seen moving slowly one after the other down toward the edge, driven by the heat still left in the main part of the metal not plunged. When the color desired has reached the edge, the entire piece is plunged into the water bath, which stops further action of the heat and establishes the degree of hardness exactly where it is desired.

This method has had two objects: you will notice, for one, that the edge of the tool has been given its required hardness; for the other, that the toughness and strength of the rest of the tool has not been impaired. To have the "eye" of an ax as

hard as its cutting edge, for instance, would be disastrous to the ax.

Very light articles and implements cannot be tempered in this way, as they will not retain sufficient heat to drive the colors, and it will be necessary to release them gradually in some way to make the colors move. Very light pieces, such as scribers, small taps, etc., are best tempered over a Bunsen burner or alcohol lamp. After having been hardened, they should be held in the flame of the Bunsen burner or lamp until the required color has appeared, and then quickly plunged into water. On large articles the colors will generally be so strongly marked that they will be readily discernible on the rough surface of the metal; but on smaller articles they will be faint, so it is best to give small articles a slight polish, either on a buffing wheel charged with emery or with emery cloth fastened to a large file or flat piece of hard wood, before exposing them to heat. The color then will be easily seen.

Tempering Knife Blades—To heat the blades, lay them in a clear charcoal fire, with the cutting edges downwards. Heat very slowly. It is best that the back of the blade, which is uppermost, is not so hot. Harden in clean water at a temperature of 95 degrees Fahrenheit. If many blades are to be hardened at once, lay a number in the fire and remove one at a time as they become properly heated. To temper, polish with fine emery cloth so that the tempering color can easily be seen. Bend up a sheet-metal pan and fill with fine sand, laying this over the charcoal fire, and place the blades, backs down, in the sand, the cutting edges uppermost. When the proper color is seen on the polished portion of the cutting edges, remove and plunge into cold water. When an extra-tough blade is wanted, after hardening, handle it so that it will not draw any lower after removing, and let it cool without putting in water.

Long blades, when they are being drawn, can be straightened if necessary by putting them between two pins in the anvil or elsewhere and bending them. Surprizing as it may seem, when hardened steel is being drawn it can be bent to quite an extent, and when cool will remain as bent. File makers straighten files in this manner. Sword blades and blades of butcher knives undergo the same process of manipulation in order to be kept straight.

Tempering Firing Pins and Extractors—The heat treatment of firing pins and extractors is very much like that of springs, inasmuch as they are hardened first in the regular oil bath, the heat having reached the correct degree before plunging into oil. They are polished after being withdrawn and placed again in another oil bath which has been heated to between 550 and 600 degrees Fahrenheit. Allow them to remain with the bath at this temperature for thirty minutes. I believe that the amateur has more trouble with these than with any other parts of a gun except the springs. One of the best steels for extractors is case-hardened cold-drawn steel. The common water-hardened chisel steels and drill rod are fair for firing pins, but when making such parts as these it pays to buy the best. The lead pot is the best means of heating these parts, for you are able to obtain an even heat throughout. Generally the large number of broken pin tips have resulted from heating the small section first to a higher temperature than required, plunging this into water, drawing the temper over a gas flame or alcohol lamp, and allowing the temper to run up to the point. The result is a soft end where the hammer hits, which upsets in time, causing the pin to shorten—if it should last that long. By drawing the temper to the correct degree of heat, there is an even hardness throughout the steel. If the point on a firing pin should be bent, do not try to straighten it while cold, but heat it to a cherry-red and then straighten. Then harden and relieve. Whenever this happens it is best to make a new pin, as the structure of steel has been fractured to such an extent that the tip will break in time.

Quenching Baths—To get the very best results in tempering, two baths are necessary. The water bath—incidentally this should be rain or distilled water—and the oil bath. The first, the water bath, is the one you will use exclusively for carbon steel. The oil bath will be used for alloy steels and high-speed steel. The oils used for this bath are linseed, whale, fish, lard, and lard and paraffin mixed, special quenching oils, etc. A small quantity of sal ammoniac added to the oil bath has a tendency to make the tools come out clean from the bath. The oil bath for hardening springs used in gun work is composed of the following:

1 quart linseed oil
1 " paraffin oil
½ pound sulfur melted
½ " rosin melted
1 pint fish oil

Melt the sulfur in a separate receptacle, also the rosin separately. Heat the oils together to the boiling point and add the sulfur and then the rosin. Agitate until all are thoroughly mixed together. Keep this in a covered stone crock.

Oil-Heating Baths—These are extensively used for tempering tools which do not require a higher temperature than 600 degrees Fahrenheit. The

work is immersed in oil heated to the predetermined temperature, a temperature which must be indicated by a pyrometer. It is important that the oil have a uniform temperature throughout and that the work be immersed long enough to be brought to this temperature. Cold steel must not be plunged into a bath heated for tempering, owing to the danger of cracking it. The steel should either be preheated to about 300 degrees Fahrenheit, before placing it in the bath, or the latter should be at a comparatively low temperature before immersing the steel and then heated to the required degree. A tempering oil which has given satisfactory results in practise has the following characteristics: composition of mineral oil 94 per cent and saponifiable oil 6 per cent; specific gravity 0.920, flash point 550 degrees Fahrenheit, fire test 625 degrees Fahrenheit.

The Potassium-Nitrate Heating Bath—This is used for pieces requiring a temperature above 500 degrees Fahrenheit, and to a point where the tempering colors reach 750 degrees. The temperature must also be indicated with a pyrometer or thermometer, especially in the case of springs. These last, to secure the best results, must be given a temperature of between 700 and 725 degrees, keeping the bath at that temperature and letting the spring soak at least ten minutes before removing. A cold spring should never be plunged into the bath, but preheated as before mentioned. When these instructions are followed, springs thus tempered will never break, providing fine British spring steel has been used.

The Lead Bath for Hardening and Tempering—Among the many secrets of hardening is the employment of the lead bath, which is a quantity of molten lead kept liquid over a fire. The uses of this bath are many. For instance, if it is desired to heat an article that is thick in one portion and thin in another, it is apparent that it would be difficult to heat the thick portion without overheating the thin part. If the lead bath is brought to and kept at a red heat, no matter how thick the articles may be, in sufficient time both the thick and thin parts will be evenly and equally heated, and no hotter than the bath in which they are immersed. The bath of lead must be covered with charcoal to prevent oxidizing, as lead begins to vaporize at about 1190 degrees Fahrenheit, and when heated above that point rapidly volatilizes, and in so doing gives off poisonous vapors. A heavy layer of charcoal prevents this rapid vaporization. To prevent hot lead from sticking to parts heated in it, mix common whiting with wood alcohol, paint the part to be heated, and let dry before immersing in the lead. For heating thin cutting blades, springs, small taps, threading dies, draw dies, etc., this bath is unequaled.

To Restore "Burnt" Steel—Pulverize together two parts horn or hoof filings, one part sal ammoniac, one part charcoal, and one part common soda. When thoroughly ground together, work in enough tallow to make it into a paste. Bring the damaged steel to a bright cherry-red and then cover with the paste, letting it cool gradually. The process may be repeated several times with profit if the steel is badly burnt. While a piece of badly burned steel may not be entirely restored by this process it can be much improved. Entire restoration is scarcely possible.

To Anneal Steel—Heat the steel to a cherry-red in a charcoal fire, then smother the fire down with a thick layer of ashes or sawdust, leaving the steel in just as heated. Let remain until the fire is all out and the steel entirely cool—which will require several hours. It is therefore well done just prior to quitting time at night. Some gunsmiths use a piece of pipe in which to heat small steel articles for annealing, packing fine pulverized charcoal in around the pieces. Cleaning will always be advantageous. Put the pieces into the pipe, plugging the end with fire clay, and heat to a cherry-red. Then cover the fire, pipe and all, leaving it to cool as in the other case.

To Blue Steel—Polish the article to be blued, then place it upon a heated steel block and watch until the desired blue color appears. Remove and let cool, which will cause the color to remain permanently.

To Remove Blue Color from Steel—Immerse for a few minutes in a liquid composed of equal parts hydrochloric acid and oil of vitriol. Rinse in pure water and rub dry with chamois skin or some kind of soft cloth.

Test for Good Steels—Break the bar of steel and observe the grain. This, in good steel, will be fine and have a silvery look, with sometimes an exfoliated or layer-like appearance. One of the tests of steel is to make a cold chisel from the bar to be tested; when it is carefully tempered (be careful not to overheat), try it upon a wrought-iron or cold-drawn steel bar. The blows given will correctly tell its tenacity and capability of holding temper. Remember the temper you give it, and if it proves tough and serviceable, use it as a guide and temper other tools in like manner. Inferior steel is easily broken and the fracture presents a dull even appearance which may very appropriately be termed a "lifeless look."

Case-hardening — You will wish to do some simple case-hardening on the various parts of guns

such as guards, butt plates, screws, etc., and on different parts of the locks such as hammers, tumblers, triggers, and plates. I shall describe this process briefly. The cyanid of potassium bath can, of course, be used as given in Chapter XVI, Volume II, but the beginner will wish to experiment with different methods for experience until he is qualified and can perform the more complicated processes. When gun parts are received from the manufacturer or dealer in the white, such articles are only in a partially finished condition. The parts on cheap shotguns are invariably soft and these must be case-hardened.

The beginner will have a good subject to start on if he disassembles one of those double-barreled shotguns which are sold for $20. These parts are only made of soft steel, and if not treated they soon wear and have to be repaired. Finish these parts with a fine file and fine emery cloth to a high polish, and when case-hardened and put together, all the working surfaces will be hard and infinitely more durable and reliable.

Why so many in the trade do not case-harden their work cannot very well be explained, unless they are ignorant of the process or do not care to be put to the trouble of doing it. Some gunsmiths, when such work is finished, heat it red-hot, smear it with prussiate of potash or cyanid of potassium, and while hot plunge it into cold water, letting it chill. This produces a superficially hardened surface that is not even "skin deep" and naturally will wear away rapidly.

If one examines a case-hardened piece of metal from an expert manufacturer, he will observe that its surface has a delicate grayish appearance and that in many places it is mottled with tints that are pleasing and beautiful. He will be further assured that this hardening is of such a depth that it will wear for a long time. As a fact, it will wear better than hardened steel. The condition of the material is that of a hardened steel surface stretched over the iron body of the work. It is stronger than steel, for it has the tenacity of iron at its interior. It has an advantage over steel, inasmuch as it may be bent when cold to a considerable degree, and when so hardened will not break as readily as steel. This elastic property is not retained in articles that may be case-hardened entirely through, for then they would be very brittle and easily broken; but by drawing them to the proper temper after hardening, in the same manner as a tool is drawn to temper, they may be of any hardness desired.

The easiest and perhaps the best way for one to case-harden gun work is to have a number of short pieces of common iron pipe such as will be adapted to the size or quantity of the work, and have one end of these pieces securely plugged or closed. One way will be to heat the pipe and close by flattening the end with a hammer on the anvil. This is a "slouchy" way of doing it. A neater way would be to have pipe threads cut on the end and fit a cap such as is used to close the ends of pipe. Place the work in the pipe, packing it well with good fine bone dust such as is used by farmers for fertilizing land. Be careful to pack so that the different pieces of work will not touch each other. Stop the open end of the pipe with a cover, but in such a manner as to be readily opened. Place pipe and its contents in a good fire, letting it remain at a heat of about 1600 degrees Fahrenheit, one hour. Remove from the fire and quickly empty the contents of the pipe into a pail of cold water, tepid water, or oil, depending upon the purpose for which the parts are to be used. For ordinary purposes, clear cold water is satisfactory. The practise of allowing the pipe and its contents to become cool, and then reheating prior to quenching, is based on the old rule of hardening on a rising heat. This method gives much more satisfactory results than that of plunging the parts into a pail of cold water at the end of the case-hardening period.

Articles of malleable iron and cast-iron are as easily case-hardened as cold-drawn steel and machinery steel. A poor quality of steel is beautified by the operation as the metal absorbs the carbon in which it was formerly deficient.

Bone dust is the material most readily obtained for case-hardening and is clean and handy to use; but it will not produce the mottled tints that charred or burnt leather or horn will. The leather may be prepared by cutting up old shoes, putting them in an old pan over the fire and letting them heat until they are a charcoal that will crumble to pieces by using a little force. Grind the charcoal to a fine powder by pounding it in a mortar. Pack the work with the powder. Gun guards, straps, and long pieces of work will become shrunken by case-hardening, and it is best not to fit these pieces into the stock until after they are hardened. If it is desired to have a portion of the work left soft and the other parts hardened, cover the places to be left soft with a coating of moist clay; this will prevent the hardening material from coming in contact, thus prevent the absorption of carbon, and so it will harden when put in the cold water. Articles which are case-hardened will not rust so readily as those not so treated. If parts are quite thin and there is danger of cracking by sudden chilling, the water may be warmed a little or a film of oil may be spread on the water. This

will tend to prevent too sudden a contraction of the article while cooling.

If it is desired to have the work finished in colors or in the mottled tints seen on some kinds of case-hardened shotgun work, the surfaces of the work, before being put in the receptacles, must be nicely polished and then buffed or burnished. The higher the finish the more brilliant will be the colors.

In using prussiate of potash to case-harden, the potash must be finely powdered, the work heated and dipped in, or if the work is large, the potash must be spread over it. The work must be hot enough to fuse the potash, and if it becomes somewhat cold by removing from the fire, it must be reheated, removed quickly from the fire, and quenched in cold water.

In preparing for these various ways of case-hardening, the beginner will find it easy to collect such articles of animal origin as cow's horn, hoofs of animals, leather trimmings from shoe-repairing shops, and old cast-off belts or shoes. These he can burn in an old pan until sufficiently charred to admit of being easily pounded into a powder. He will then have material always ready at hand.

In earlier times, when guns were as much in use as agricultural or mechanical implements and there was a gunsmith's shop at almost every cross-road, there was a way of case-hardening much used that was simpler than the foregoing and yet quite effective. Scraps of old leather were cut from old boots and shoes, and these were tightly wrapped and tied around the piece of iron to be hardened, to the extent of several thicknesses. Around this was placed a layer of sand and salt mixed in equal proportions to a thickness of half an inch. The sand and salt were dampened with water to make them adhere. A layer of clay an inch in thickness was then worked around the whole, and the ball so made was exposed to a cherry-red heat long enough to consume the leather when it was dropped suddenly into the water. There is one more useful method to "chill" or harden cast-iron. Make a solution by dissolving in ten gallons of rainwater the following:

1 peck common salt
½ pint oil vitriol
½ pound potassium nitrate
¼ pound cyanid potassium

Heat the iron to a cherry-red and plunge it at once into the cold solution. This makes cast-iron hard enough to cut glass; it is the method usually resorted to for hardening the cheap cast-iron cutters which were common at one time.

The foregoing methods and practises cover the needs of the mechanic but are hardly exhaustive. Heat treating is a branch of metallurgy which is intensely scientific and so is quite beyond the ability—and fortunately the needs—of the workman. You should and will take pride in the physical, mechanical, and chemical knowledge of the subject you are interested in, for it requires at least some special training and no little study and effort to bring about a state of efficiency. Nothing that pertains to gun work in general lies outside of these comparatively simple processes. I would add, however, this caution: Do not attempt those things which are beyond your ability. I would influence you to apply your experiments in other directions where failure does not carry vital consequences. In this we have in mind those parts of modern arms that have to bear the stresses of modern high-power ammunition. The receivers of bolt-action rifles and their bolts (in the Springfield, Krag, Winchester, Remington, and others) are made of special materials of known composition, and the heat treatment has been adjusted exactly to their requirements. To touch this temper, much more to attempt to restore it, is beyond the ability of any one not scientifically trained. I council and urge my readers not to experiment in this direction. One's eyesight, yes, even one's life, is endangered.

CHAPTER XX

Revolver and Pistol Repairs

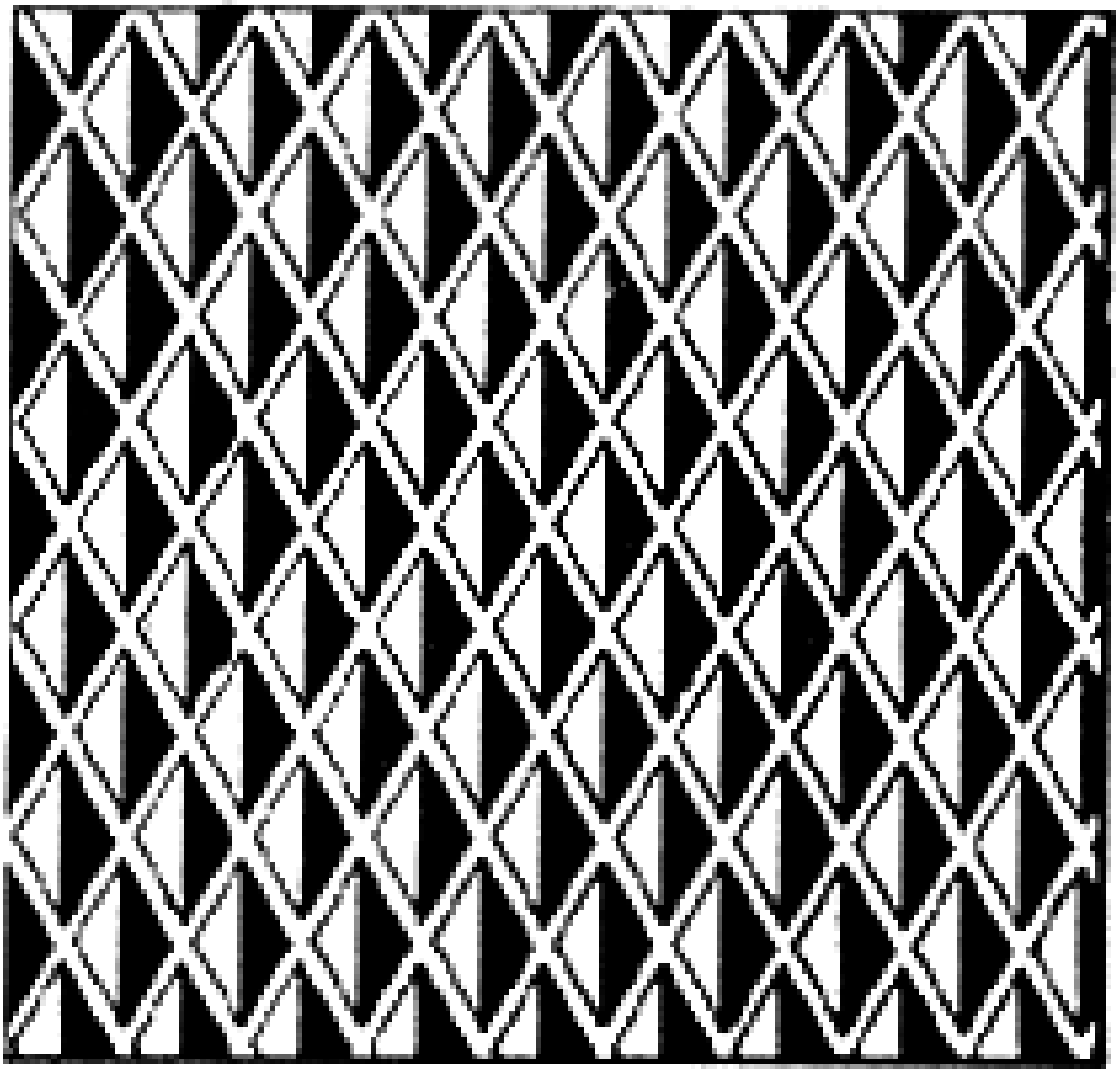

CHAPTER XX

Revolver and Pistol Repairs

WE AMERICANS are especially blessed in this matter of handguns, both as regards quantity and quality, certainly the latter, for in no other country are the standards of manufacture of revolvers and pistols as high as in the United States. Not only in high mechanical perfection but also as regards excellence of design, constant improvement, and particularly in the development of new models and improved features do our manufacturers keep abreast of all competitors.

The last decade has been an especially prolific one with our shooters when it comes to new and improved revolvers and automatic pistols and the most discriminating handgun crank has little cause for complaint when he considers the many new and improved models recently brought out: Smith & Wesson with their embedded head cylinders and their heavier-framed and better heat-treated heavy calibered revolvers; Colt with their matted frames and non-reflecting surfaces, checkered triggers and grips, the readiness with which they chambered their most popular models to take all the better cartridges, and particularly the selection of fine, man-sized pistols and revolvers which they have chambered and adapted to shoot the increasingly popular .22-long rifle cartridge. Indeed, our rifle manufacturers could well emulate them in this last respect, and by so doing offer to our riflemen something better than the trifling, boy-sized .22 hunting rifles which they now produce.

Due to this splendid quality and superior workmanship of our manufacturers, our handgun troubles are comparatively few. In fact it is seldom that a pistol or revolver fails us through legitimate breakdown; generally the trouble is due to misuse, neglect, or the efforts of the owner to effect some change or improvement to his arm. This chapter will be written mainly for the benefit of this latter chap, the crank who is never satisfied with the things that be—as long as they be related to pistols and pistol-shooting matters. Many of the subjects applicable to pistols and revolvers, such as adjusting trigger pulls, bluing and browning parts, checkering of stocks, etc., are covered in other parts of these books under their respective heads; therefore this chapter will only deal with those special problems peculiar to handguns.

A revolver is a repeating pistol operating by means of a revolving cylinder. A pistol is a single-shot rifle of such size and shape that it can be aimed and fired with one hand. For this reason we classify the automatic as a pistol, since it also has a single barrel. In modern revolvers only the cylinder revolves, but in many of the obsolete arms the barrels revolved. The cylinders in modern arms are chambered to take from five to nine cartridges, six being the standard. The term "pistol" is applied rather indiscriminately by many to revolvers, automatic pistols, and the single-shot pistols; this is particularly the case in the average newspaper of today. Since the use of all three of these arms has become so popular, and the skill in shooting them has been developed to such a high degree by the target shooters of the day, there is a recognized difference in the use of these arms and in the skill developed in manipulating them.

Great credit is due the American manufacturers of handguns, particularly our two leading firms. The requirements for our national weapon are many and varied, and theirs has been an up-hill fight, increasingly hard of late years because of the fool anti-gun laws being passed by every police-ruled municipality. Prohibition, it seems, was admittedly a failure, but not firearms prohibition; let us do away with these weapons of destruction and by so doing place any and every law-abiding American citizen at the absolute mercy of armed crooks who admit of no law but the rule of intimidation. And it is but yesterday to a large portion of this country when the "six-gun" was the only law known in that section and every American went about with law, order, and justice always at his right side.

Revolver and automatic pistol repairs are rarely encountered with our best American arms; trouble is mostly experienced with the cheap arms produced here and abroad, and these require many minor repairs. European nations may lead in other firearms, particularly England and Germany, but not in handguns; altho some very good examples of automatics are produced in Germany. But the majority of foreign pistols and revolvers are cheap beyond comparison. Every week a surprizing number of cheap arms which are worthless or far beyond redemption come into my shop for repairs,

Fig. 125
The old peace-maker that brought law and order to our early frontier. The Colt single-action revolver

and I have learned that it does not pay to bother with such weapons, for you will spend more time trying to get them in working order again than you can ever charge for. This is especially true of the Spanish handguns, and if I can avoid repairing these, I do. Actually, it is always best to treat these as experimental subjects on all occasions.

All our better grade of domestic arms reflect superior workmanship and manufacturing facilities, and it is always advisable to ship these back to the factory when any major repair or replacement is indicated. However, owing to the existing postal laws, this is an expense and inconvenience to a great majority of our pistol shooters; hence, if only a minor trouble exists it will pay to make the repair yourself. When shipping back any handgun it must be sent by express, such articles being now excluded from the mails.

The work done by the owner of our better class of revolvers and pistols usually consists of remodeling the hand grips, bettering the trigger pull, changing or correcting the sighting of the arm, remedying slight ejection or ignition troubles, and a possible bit of retouching the finish of a worn action or barrel. As far as the average gunsmith is concerned, the lid is off and he is liable to be called upon to fit a new barrel or cylinder just as quickly as to reassemble the latest model from Colt's which the proud but stupid owner took apart as soon as received "to see how it worked." Hence I must cover considerable ground in this short but important chapter.

New Grips — This is one operation which the amateur can work on to his heart's content and with slight likelihood of doing any damage to other parts of the gun. If you should spoil a grip over which you have spent two or three days' time—what's the difference? You can easily cut out another piece of walnut and begin all over again, for the experience gained will be beneficial in many ways. Work of this type is essential to your future good markmanship, as the feel and fit of the grip of a handgun is just as important as the stocking of a match rifle and a pair of properly fitted grips will gradually increase your scores on the target.

All scrap pieces from the better grades of gunstock blanks should be saved and this wood used for pistol grips. When available, select the dark pieces of Circassian, French, or Italian walnut. If nothing but American walnut is at hand, pick out those sections of root growth which have the closest grain and the finest figure. The soft sections of American walnut are worthless for grips, and much time and effort will be saved if the finest of European walnut is used; the amount required is small and the price will be little if anything. Beautiful burls may be selected and grips made which are unique in coloring and pattern, in addition to being a proper fit for the shooting hand.

The blanks should be sawed out much oversize all around and each pair should be gotten out from the same piece of wood, particularly if it is well figured. Saw the piece roughly to shape, but have it twice the required thickness; then split it with a fine-toothed saw and use the two halves "inside out," which will make the grain and "pattern" identical on each side of the grip.

The tools required for fitting consist of small carving chisels, a small rasp, and small half-round files. Also, forms will have to be cut out of hard wood to hold the grip in place in the vise. I have seen many a good job done at home with a small vise clamped to the table top.

If the dimensions and outlines of the new grip will be larger than the frame, the front and back straps must be inletted into the wood just half their depth on each grip. Follow the same general rules used in the inletting of rifle actions, and cut the outlines of the frame straight into the wood, using the wood-carving chisels—the small, sharp chisels are the ones required. Use mouse-like gnawing

cuts. Spot in the grips with lampblack, using very light coats on the frame. The two edges of the wood must meet in the center of the straps and each grip must have perfect contact with the other so that when the work is finished you will scarcely see the dividing line; otherwise when the two pieces come together you will see rather large cracks between them.

After the blanks are properly fitted to the straps, drill the holes for the stock screw and alinement pins, and counterbore for the escutcheons. It will not be advisable to remove and use the escutcheons from the standard grip you are replacing; better make new ones and also a new screw. The regular stock screw will not be long enough, and if used, it will be necessary to counterbore so deeply as to spoil the appearance of the job. Fit the new stock screw up tightly so there is no creep or give to the grips. With the blank now properly fitted to the frame, form the wood to the shape of the model you have decided upon, using the carving chisels and different shaped files. To arrive at the proper shape, clamp the barrel between the felt jaws of the vise and carefully work down the surplus wood. Be very careful that the files do not touch and mar the metal at any time, and when finished to the required form and outline, remove the grips from the frame and fasten them to a dummy block of wood by means of a small wood screw through the escutcheon screw holes. Now hold this block in the vise and do all that final touching up which was impossible while the grips were on the finished gun. They can be sanded down while on this dummy and you may wet the wood and raise its grain as is done for a rifle stock, a process described in the chapter on Modeling and Shaping. After this operation they may be finished by using any of the formulas given in the chapter on Giving the Stock Its Final Finish, and then checkered or carved as described in Chapter XIII.

Artistic skill may be exercised in various carvings or decorations. A strip of $\frac{1}{32}$, $\frac{3}{64}$ or $\frac{1}{16}$ inch silver may be fitted between each side of the frame and the wood, with the outer edges polished very highly. This gives a most beautiful contrast between the blued steel and the wood. These silver strips work equally well on either revolver or automatic pistol grips. Or a piece of sheet silver may be fitted to the bottom of the grip and then covered with a piece of buffalo horn and the latter rounded off in conventional lines; this "grip cap" is held in place by two small screws into each of the right- and left-hand grips, or by a center screw countersunk into the metal bottom strap after alinement pins have been inserted in a manner identical with the regular stock pins.

Grips may be made of materials other than fine woods; there is available buffalo horn, mother of pearl, ivory, walrus ivory, stag horn, cow horn, etc. The artistic student may wish to "crib" Charlie Russell's trade-mark that one sees in the corner of all his paintings, substituting his own initials for that "C.R." which centers on the steer's horns still intact. Or some very fine decorative work can be done by setting in various forms of ivory and buffalo-horn inlays as suggested in Chapter XIII.

The dyed-in-the-wool target crank may want to depart entirely from the conventional designs and model his grips to conform exactly, by allowing grooves for each finger and the thumb of his shooting hand. And here is really where plastic wood comes into use in gun work. The best method of arriving at this perfectly-hand-filling grip is first to make temporary grips of thin white pine or similar wood and then mould out the personal characteristics of the individual hand. To do this, spread a thick layer of plastic wood over the fitted panels, oil the hand slightly to prevent sticking, and firmly grasp the pistol butt in the exact position used in the act of firing. Take your proper stance and actually aim the gun at the target, arm extended as in firing; hold it there for a brief interval and then remove the gun from your hand without disturbing the rough mould, which should be in exact conformity to your hand and fingers. Carefully remove any surplus from the straps with a penknife and then clamp the barrel in a vise and let the mass dry and harden. The shape will remain.

Plastic wood may, after drying, be filed or sanded to any shape desired, or it may be changed until you have the desired form by adding to any point found lacking. Before going too far with the finishing of the plastic wood stock, take the gun out on the range and actually fire it at the target. Keep altering the shape until you have a perfect hold in the grip which suits you best. This actual shooting may show up points or faults not noticed when merely pointing the gun. After you have the grip exactly correct and to suit your fancy you have a model which may be copied in walnut or in any other material which you decide upon.

This model made from plastic wood may be heavily shellacked and castings made of it from aluminum, as this is an ideal metal for such purposes. Or you may wish grips which are unbreakable but of the standard shape on the gun; simply use the factory grips as a pattern, but first build up the under side $\frac{1}{32}$ inch by gluing on thin cardboard of that thickness. Grips thus cast from this pattern will be exact duplicates of the standard

stocks, even to the medallions and checkering. Any foundry specializing in aluminum castings should turn them out very smoothly, and all that is required is a good scratch-brushing to dull the appearance of the metal. If obtainable, a sand-blast finish is to be preferred. The checkering on these aluminum grips will never wear smooth as a wood grip will in time.

On most of the double-action revolvers the space back of the trigger guard permits the hand to slide up too far for a firm and steady hold. When fitting new grips it is possible to have the wood come forward to the guard and eliminate this opening, with a greatly improved grip as a result. Some shooters fill this in with plastic wood to suit their taste or make up a piece of cold-drawn steel as shown in Figure 126. The raised projection just

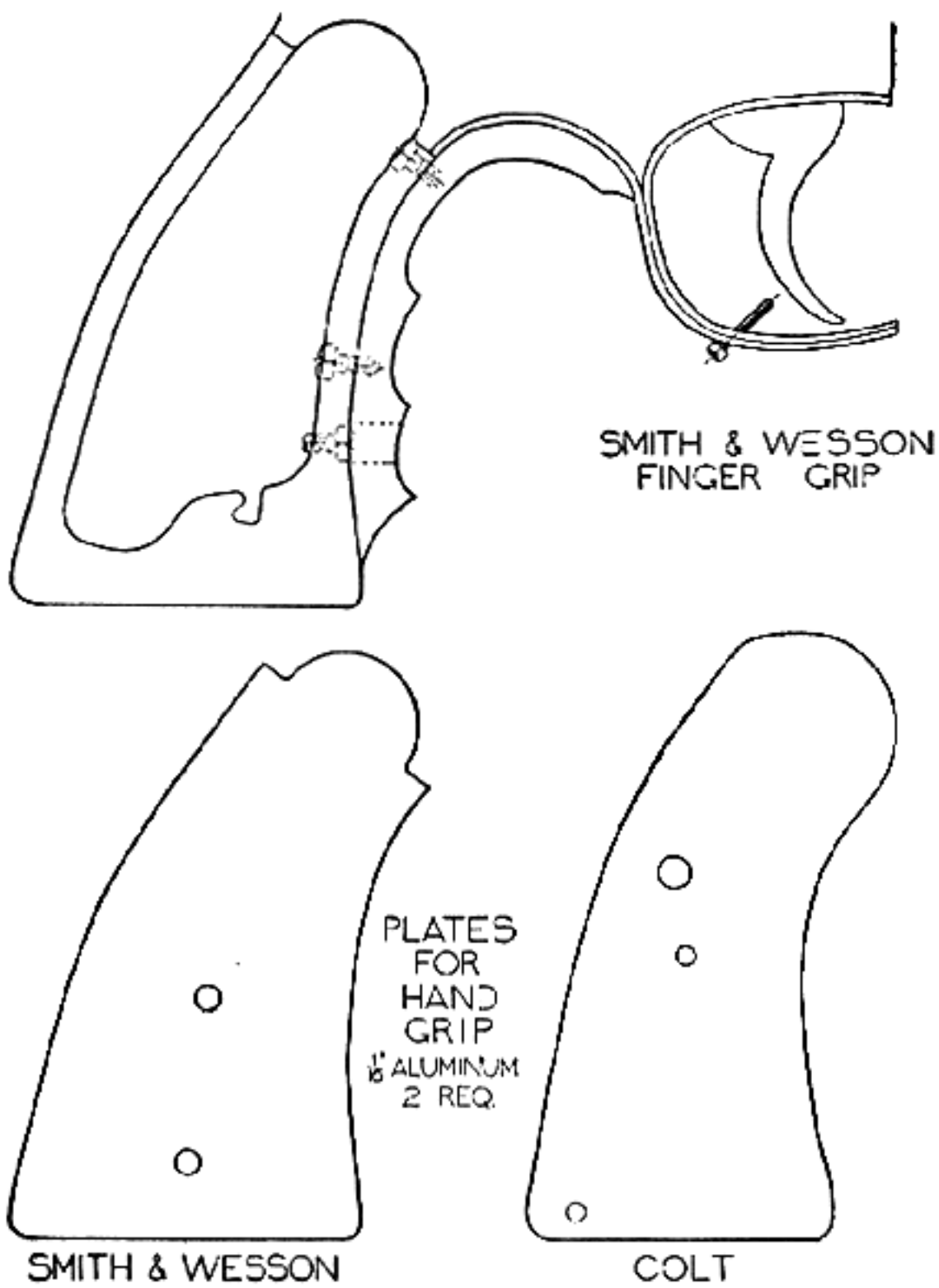

Fig. 126
Plates and finger grip used on target revolvers for better holding

fits in between the fingers while the top part fills out the space; it is screwed in place by two small screws set in through the frame from the inside. I have also filed out this space and dovetailed in a piece of cold-drawn steel, making the fit so it was scarcely noticeable and looking as tho it were part of the frame. This was also anchored in place by an inside screw. There has recently been placed on the market a device to remedy this failing. It is supplied in varying sizes to fit all models.

Often a piece of $\frac{1}{16}$-inch sheet aluminum may be placed and fitted under both grips to widen out the stock $\frac{1}{8}$ inch, which makes a great improvement over the standard grip for the man with a big hand, shown in Figure 126.

Sights — The factory sights on revolvers and pistols are made to suit the ideas of the average shooter and a great many persons take it for granted that the height of perfection has been reached in these "standard" sights. But you may be one who must have better sights for better results or else to suit your own peculiarities of holding or eyesight. The sights on these arms can be altered to suit any idea or person—provided that person has originality enough either to do the work of alteration or to express clearly his idea to another.

The exact use and purpose of the arm must be considered before the old sighting equipment is stripped off. If a revolver is to be carried in a holster and used for protective purposes, it must have sturdy, substantial sights which cannot be bent or knocked out of place; sights which will not in the slightest interfere with the rapid drawing of the arm in an emergency. Sharp corners and square edges are totally out of place here; what we want is plain, solid sights "low down" on the barrel, and with rounded outlines, beads, or tips. A gold-bead front sight is apt to be especially suitable under such conditions, particularly one with a sufficiently large bead. On a target arm the exact opposite is called for; here we want clear, square, black, sharp, clearly defined sights which will show up in strong contrast against the target, and which are capable of minute and positive movements. The target arm will always be handled carefully and we can use the finest of pin-head beads for a front sight if desired.

The last decade has witnessed a great improvement in the matter of standard sighting equipment on our better-grade American revolvers and automatic pistols, particularly on the target arms with movable sights. The principle is entirely different in our two leading makes—Colt and Smith & Wesson. The latter firm fit a fixed front sight on all their various models and have designed a flat rear sight which permits movement of the notch in two directions, allowing for both elevation and windage. The Colt Company fit a front sight on their target arms adjustable for elevation, but some ingenious person may design a more simple means of raising and lowering this sight and of locking it

in a more positive manner. Their rear sight is a simple sliding bar moving in a dovetail slot across the frame. Both firms cater to the prevailing fashion of the day in the matter of sighting combinations; namely, the "U" rear notch with bead front sight of various-dimensioned tips and the Patridge type of wide, square and sharp-edged front bar with a corresponding wide and square rear notch.

The sight bases on either of these revolvers allow one to substitute, in a simple manner, other commercial sights or those of his own manufacture which can be made from a sheet of steel of the proper thickness. Only a hack-saw and a set of needle files are required to construct any form you may wish. In the Smith & Wesson the substitution is extremely simple with either front sight or rear bar, altho the front sight is much harder to file out than the movable rear. The shooter can make and try out any number of combinations of various widths of the Patridge type of sight on a Smith & Wesson arm, the rear sight being especially easy to experiment with as it is but a plain, flat bar of metal. The Colt is a trifle more difficult, particularly the front sight with its threaded and pivoted arrangement.

It is a puzzle to many shooters why the sights of some of our target revolvers should be so high, and here is a place where the careful workman with a few needle files can work a much needed improvement and at the same time take a somewhat awkward appearance off one of his favorite arms.

An improvement can be effected in the standard-type revolvers with fixed sights which have the small "V" notch at the rear of the top strap. A dovetail can be filed out across the strap, placing it as far to the rear as thickness of metal will permit; then a lateral sliding bar can be tapped for a small set screw if desired, as the dovetail should be parallel, which will permit an accurate lateral movement of the sight notch for windage or "holding allowance." This method is especially applicable to the old Army model-.45 Colt revolver, various military automatics, and the .22-caliber single-shot pistols.

The use of a peep sight is not practical on the usual revolver or automatic pistol, as these arms must be held at arm's length when fired and this defeats the optical principles of the aperture sight. However, some of the older generation of pistol shooters will remember that fine little pocket arm of the '90's (1890)—the Stevens Diamond Model .22 pistol which came equipped with a small aperture rear sight and fine pin-head front bead. The conventional manner of shooting this gun was to fold the arms together in front of the face with the pistol laid on the left biceps while the head leaned forward and rested on the right elbow and left hand; this brought the face up against the right hand with the eye right up to the aperture according to the best of peep-sight principles. Remarkably accurate shooting could be done in this manner, but I have not seen such a position used by the last generation. However, the use of a peep-sighted pistol is entirely possible under these circumstances with an arm whose recoil and power is not too great, and users of .22 single-shot pistols who care to try them with a peep sight can fit in a suitable rear and bead front sight.

The question of a suitable front-sight base often arises, due to the barrel being shortened or some arrangement being made whereby front sights may be changed readily. At times a fixed, slotted stud, similar to the Springfield rifle, can be made and fitted. The band or fixed stud may be made from steel tubing filed down to shape or it may be bored from solid metal and ground and filed to shape. This stud may be attached to the barrel by sweating or by being snugly fitted and then pinned with a cross-pin biting into both barrel and stud. A small headless screw can be used if set vertically through the thick part of the stud and just entering a shallow drill hole in the barrel. Either of these methods will lock the stud in place. The sight proper may be finished up in any shape desired, but before finishing it should be fitted temporarily into the slot and the arm fired on the target to determine correct height of front sight. After the correct height is determined it is finished to any desired shape of bead, carefully polished, blued, and fitted into the slot so it can be easily substituted for some other style of sight, or anchored permanently in place.

Should the front sight be of an awkward-looking height on a revolver barrel it is entirely possible and in good taste to fit a low, short ramp. In many cases this will add a most attractive look to the gun, but the height and particularly the length must be studied out and be in proper proportion to the length of barrel. A length of between 1 and 1½ inches will generally be right; on a target revolver this makes the outline very pleasing and if matted properly is an aid to good shooting. This ramp may be made with an encircling band and be sweated on the barrel in the same manner as on a rifle, or it may be made without such a band, but sweated in place with an additional small screw holding it fast; the solder and screw will make it a perfectly tight union. It could be silver-soldered in place, but I do not advise this operation except at the factory, where they have the proper equipment and experienced men; in too many instances this

has been tried by amateurs and resulted in a ruined barrel.

In Volume II we shall take up the manner and methods employed in the making of special sights for revolvers and pistols, which in itself comprises quite a lengthy chapter.

Sight Adjustments — A revolver or pistol as received from the factory will often group its shots to the right or left, or above or below the object aimed at; generally the misplacement is in a lateral direction. This is not due to carelessness in manufacture, as all quality handguns are targeted by skilled marksmen before leaving the factory, and must perform in an accurate and satisfactory manner before passing their rigid inspection. Such sighting discrepancies are generally due to the shooter's lack of training, peculiarity of hold, or incorrect method of trigger squeeze, generally the latter. The past generation has seen a great improvement as regards the proper sighting of arms by the factory; I can remember when the .38 double-action revolver was the official side arm of our armed forces and in those days you went out on the target range to find out which corner of the target frame was to be aimed at in order to place your bullet in the bull's eye. It is a long cry from that comparatively inaccurate and ineffective weapon to the accurately sighted and powerful .45 automatic of today.

Minor sight corrections are easily effected where the arm is equipped with adjustable sights, and you will invariably find such an arm with the rear sight slightly off center to compensate for some individual peculiarity of eyesight or holding on the part of the owner. But where the gun is a standard model with fixed sights, "as issued" according to the rules, the problem is by no means so simple or so readily corrected. Sometimes the front sight can be bent to one side a trifle to accommodate the deficiency, but often the shots will be grouped either too high or too low. If the latter, it is an easy matter to file down the front sight and make the necessary correction, but if the arm is shooting too high it will be necessary either to make a new front sight or to build up the old one.

To increase the height of a fixed front sight, file off $\frac{1}{16}$ inch and then place a $\frac{1}{32}$-inch saw slot through the center running "fore and aft." File out a new blade to fit into this slot; the width of its top section should be a little greater than the width of the standing sight. The under-cut which is filed to fit into the saw slot must be a neat fit of the same depth as the slot, and when completed this is sweated into place. If due care is used in the operation, the joints are barely noticeable. Shoot the revolver at the desired distance and gradually file down the surplus height until the gun shoots into the exact center of the aiming point. After this sighting in, finish off the sides neatly with a file and then reblue the entire blade.

If you find it necessary to bend the front sight to such an angle that it looks incongruous, bend it back into line again, fit a thin plate to the proper side of the sight and sweat it in place. This increases the width of the front sight and will cause the groups to move in the direction desired, even tho it is wider than the original sight. For example, suppose the shots are going to the right of the mark; accordingly, the plate is sweated to the right side of the front-sight blade. The additional amount of metal placed on that side necessitates swinging the muzzle to the left to center the mark with the wider front sight, and carries the group to the left also. File down the proper side of the widened blade until the gun is shooting in desired location and then polish and reblue. If you wish your group to be moved to the right, the plate should be sweated on the left side and you file off surplus metal from the right.

A change of this nature on the front sight may necessitate some alteration of the rear sight also. You may be able, by filing the rear notch slightly to one side or the other, to assist in the change of grouping caused by moving the front sight; or in case the desired change is slight, possibly the entire alteration can be effected through filing this rear notch to one side. Keep in mind that movements of the rear sight control the group location just as readily as the front sight, but the movement is just opposite, the shots moving to the same side as the notch. This simply means doing all the filing on one side of the notch, and maintaining the other side in its original form. Often it is desired to square out the bottom of a U-notch and change it to a wider Patridge type of sight; this can readily be done with a fine, square needle file having two safe edges.

With the .45 automatic it is easy to change the shot grouping laterally, as the rear sight may be moved in its slot. This is also a nice sight to interchange and experiment with.

Changing and Fitting New Barrels — This is a job I would advise sending to the factory unless you have the necessary tools to carry out such an operation properly; or at least the necessary tools to make the required fixtures to do the work, namely, a proper barrel clamp and wrench.

Usually when one attempts to remove a revolver barrel by holding it between wooden jaws in the vise and using a monkey or crescent wrench, the

result is a sprung frame. The backwoods method of winding a long rope around the barrel and turning it with a pick-ax handle seldom works here. This applies to most single- and double-action revolvers, particularly to those double-action revolvers in which the left side is cut away in order to receive the crane. Very few of the double-action frames are hardened, and it is an easy matter to spring such frames very badly unless a suitable wrench is made to encircle the cut-out on the left side and at the same time be made to the correct form for bearing against the right-hand side. The Frontier and Bisley model Colts have case-hardened, one-piece frames; therefore these are not as easily sprung as the divided double action; yet wrenches should be made for them as well.

If you do not wish to go to the trouble of making a solid wrench, as shown in Figure 127, two pieces of steel can be made to fit a crescent or monkey wrench. With these placed between the wrench jaws and tightened well against the frame, and the barrel clamped very tightly in the vise between the steel clamp as illustrated in Figure 87, Volume II, any barrel will break free from the frame. When removing the barrel from a Smith & Wesson revolver be sure first to remove the small pin which goes through the frame and the top portion of the barrel threads and which holds the barrel rigidly in place.

To make a special cast-iron clamp the full length of the barrel requires a shaper or milling machine to form the block. It should have a two- or three-degree taper on the sides so that when it is placed in the vise the direct pressure will be directed against the top; thus the clamping pressure is solely upon the barrel. When the shaping of the outside is completed, the tapered hole is bored, and this should be to the same taper as the barrel. A clamp should be made for each different make of revolver, the sizes and tapers varying somewhat on different models and calibers. After the hole is bored out to fit the barrel intended, a ⅛-inch slitting saw is run through to within ⅜ inch of the bottom. A larger slot is made at the top in order to allow the front sight to clear; and if for a Smith & Wesson, a much larger opening is bored at the breech end to allow for the swelled breech, and also the crane lock at the bottom, as this is integral.

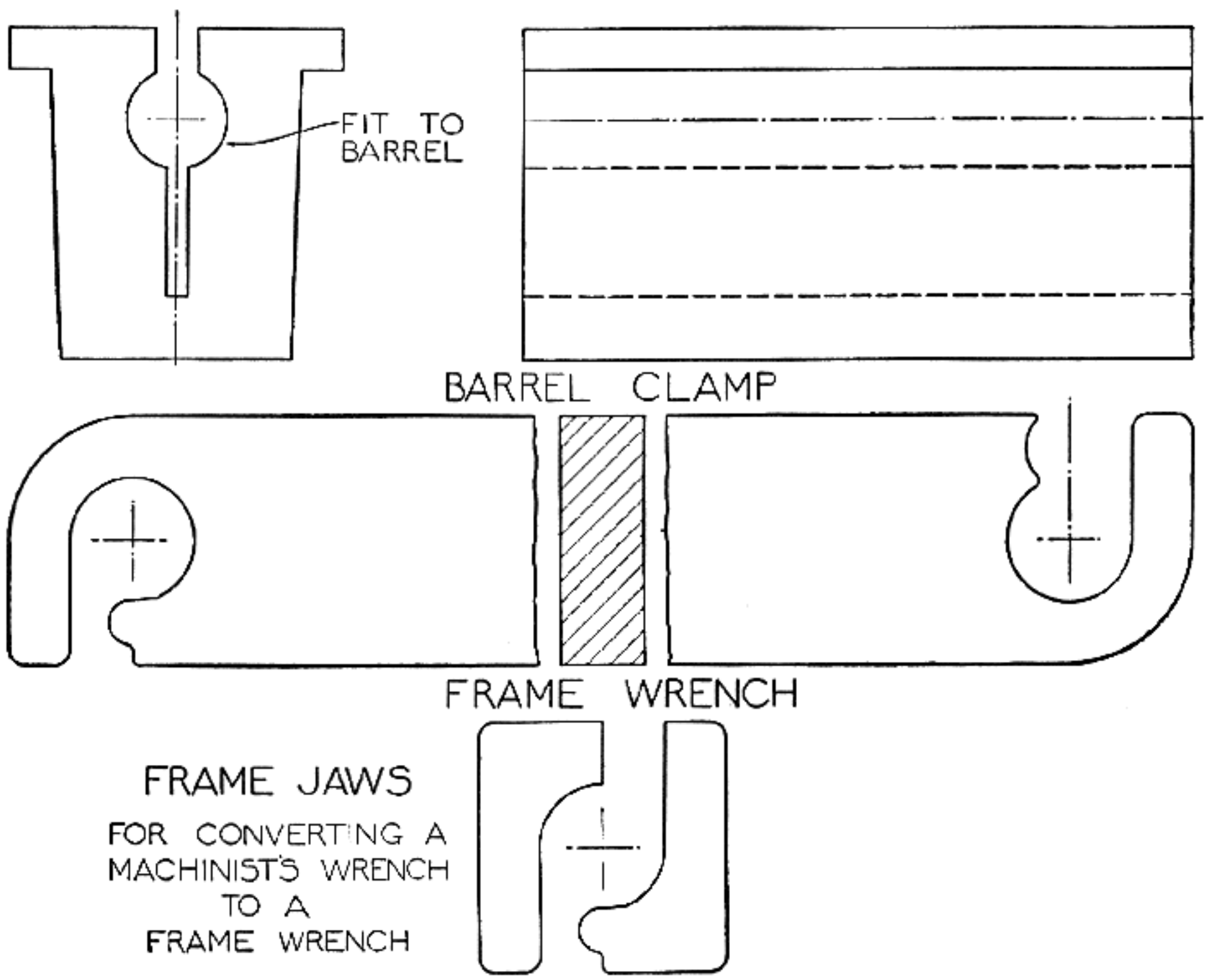

Fig. 127
Tools for removing and screwing in revolver barrels

If you are not in a position to make these special

parts necessary to remove or screw in barrels, it will be far better to send the gun back to the factory where they have the proper fixtures for holding, and appliances for removing old barrels. They can do this operation without any possibility of damage; and should any damage occur it will be repaired or the damaged parts replaced without any cost to the owner and without his knowledge.

Having removed the old barrel, clean out the threads in the frame with gasoline; a swab on the end of a stick or a small round brush will work well into the inside and clean it more thoroughly. Wash all grease out of the threads on the new barrel and apply a few drops of thin oil, say No. 1 sperm. Screw the new barrel into the frame by hand until the shoulder touches and then place it in the barrel clamp; tighten well in the vise and with the proper frame wrench pull it up into place, until the sight is at right angles with the square insides of the frame.

Generally it will be impossible to pull or turn the barrel to its final position at right angles with the frame. If so, back out the barrel and chuck it in the lathe, get it running perfectly true, and with a finely pointed side tool take a very fine cut off the shoulder of the barrel; again try and see if it can be fitted into the correct position. It may be necessary to take two or three such light cuts before it does come into proper alinement. Some gunsmiths try to pull a new barrel into place by extra effort, but this strains the threads; they should be set up very tight but this extreme is unnecessary.

If you do not have a lathe available to face off the shoulder on the barrel, it is in order to use a very fine file, and file off the face of the frame where the barrel shoulder meets. Prussian blue is used on the face of the barrel shoulder and spotted against the face of the seat of the frame; as the high spots are removed new spottings must be obtained. This is continued until the new barrel sets up tight and in perfect alinement. By properly spotting the barrel shoulder, a perfect bearing surface is obtained against the frame, which is a very important point in all revolvers.

The newly fitted barrel will now be found to extend too far out from the rear end of the frame to permit the cylinder to close and lock in firing position. This condition is corrected by holding the barrel, muzzle down, in a vertical position between the felt vise jaws, and with a fine pillar file dressing off the rear end of the barrel. Too much care cannot be used in doing this to secure a perfectly flat and square surface with a minimum of clearance which will permit the cylinder to clear and revolve properly. At this stage of the operation a very fine oilstone is used in connection with a feeler gauge; stone off the end of the barrel until a clearance of between 0.001 and 0.002 inch is reached with the feelers. Have the former the "go" gauge and the latter the "no go" at all segments of the barrel and you will be right. Revolve the cylinder and see that it will clearly pass every chamber position without binding; here is one of the fine adjustments in good revolvers.

After filing and stoning off the rear of the barrel for the correct clearance between it and the cylinder, a slight burr usually remains on the inside edge. This must be removed or the barrel will spit lead to some degree. To remove, take a short piece of round oilstone and grind an angle on its end in a circular radius; this can readily be done on the emery wheel. Make the angle slightly greater than the chamber on the rear of the barrel. Insert this in the chamber and twirl it around with the fingers, using only sufficient pressure to remove the burr and take the sharp edge off the end of the barrel. This operation removes the knife-edged burr, and a bullet will never be sheared as it is delivered into the barrel.

When a new barrel is fitted into a .22 automatic pistol, be very careful that the extractor slots come into proper alinement when the front sight is at its correct angle with the frame. Should they be slightly out of alinement when the sight is correctly fitted the barrel must be removed and its extractor slot widened out very slightly until the slide will close perfectly without any binding or friction against the extractor. A little Prussian blue will show the exact bearing if there is any binding against the cut-out.

Replacement of Parts — It does not pay to attempt to make small parts when they can be ordered so reasonably from the factory. Of course, if one wishes to gain the experience it is then advisable to make them, provided you have the broken part to use as a model. If not, better buy the new part, as some are so complicated in form and structure that you may spend many hours of labor before the correct shape is finally obtained and then you may have to make a number before having one which will work.

The old Colt single-action Peacemaker seems to be the worst offender among the revolvers in regard to broken parts, and I have more of these come in than any other model. This gun was designed some sixty years ago, at a time when our mechanical engineers were not as conversant with working stresses and steels as they are now—or with six-shooters either. Many of the working parts of this big gun are comparatively weak, particularly the

sear and bolt spring, hand and hand spring, end of trigger, and main spring. At times the base pin will wear at the notch or its catch become weak and permit the pin to slide forward from recoil. The owner of this arm who expects to shoot it much should have a few extra parts always on hand, particularly sear and bolt springs and hand springs. The firing pin on this arm is one of its strongest features and one seldom hears of this being broken. Despite all its faults owing to the weakness of the parts I have enumerated, this arm can usually be operated and functioned by hand provided the main spring is not the part broken.

Next in the line of cripples is the old double-action Colt Frontier model. There are still a great number of these around the country, stiff from disuse, and when picked up and operated they are usually found disabled through the breaking of some small part just as in the Army model. However, this double-action model has absolutely no appeal to the handgun crank of today, and since it is entirely obsolete repairs are only made to keep the old relic as a memory of the past.

The .38-caliber old-style double-action Colt military revolvers, which the government sold in such numbers, is an arm whose parts cause its owner much trouble; or rather, not so much the parts as the unusual manner in which they are assembled. Nearly all part trouble can be traced to owners who disassembled the arm and then did not get the hand spring back in its correct location; this lies in an odd position. After removing the side plate and having cleaned or repaired the gun they neglect to note how this spring is against the pin on the plate; they assemble it on the rear side of the pin, and upon trying out the action the spring is bent or broken as the hammer is drawn back. There is also much trouble to be expected with the bolt spring when you assemble the parts; it usually takes three hands to compress the rebound spring and place the rebound lever in position together with the bolt and spring. Broken main springs are common with this model but these can be replaced very easily.

There are so many automatic pistols on the market that I shall not attempt to enumerate them or the list of necessary replacement parts for the most common breaks. We shall disregard the cheaper foreign arms entirely. One finds few minor troubles on the better grade of automatic pistols. The three outstanding causes which I discover on the automatics brought in to me to repair are: badly neglected and rusted barrels; worn and bent magazines which permit the action to jam; and parts which have been ruined through the owner's ignorance in taking a drift punch and driving out some part looking like a pin, possibly ruining both the part and the surrounding portion of the frame.

A common error made when trying to disassemble the Colt .32 and .380 pocket automatics is to push the retraction spring in against the plug with a tool of some kind and get it caught on the inside of the frame. If the plug cannot be entered again, the usual method is to saw the end off the receiver so that the spring may be removed through the opening made, or the plug made to enter the hole.

No matter how many sheets of instructions come with an arm, there are people who try to do it differently and in the end bring the gun in to some gunsmith to have it placed in condition again; at times it can be done and at times not without being sent back to the factory.

If an old magazine causes the pistol to jam, it is best to buy a new one, and send the arm back to the factory to have it properly fitted. It may be temporarily repaired by a slight bending of the magazine lips, but the sheet metal has probably lost its temper and will no longer hold to shape. At times a new follower can be made from a piece of steel and inserted, but in general magazine repairs are only temporary and it is not long before the fault is repeated.

The ejector on the .45 automatic goes bad at times and will throw the ejected cases into the shooter's face, and often jam the action at the same time. When this happens it is always best to buy and fit a new ejector rather than try to alter and repair the old one.

A rather common extraction trouble on the .22 Woodsman is caused by the owner's neglecting to clean the arm due to the use of some "cleanless" make of ammunition. The chamber becomes slightly rusted or pitted and the soft copper case expands when fired and sticks in the chamber. The remedy is to strip the action and polish out the chamber with a piece of fine emery cloth threaded on a piece of drill rod, the end of the rod having been slit with a hack-saw. Take a short piece of rod and revolve it with a hand drill, being especially careful not to enlarge the forward end of the chamber. Work the cloth back and forth as it revolves and do not go too far forward with it and cut the "leed." After that fault is remedied, see that the condition does not occur again; wipe out the chamber and give it a slight oiling occasionally.

Misfires — This serious offense can be traced to various faults, but in a number of instances it will be found to be due to the owner's misdirected efforts in having ground down the main spring in

Fig. 128
Colt caliber .22 automatic. A very efficient weapon for the woodsman

order to make the revolver cock and fire more easily. When this is the cause, better send to the factory for a new main spring, or make one yourself from the best British spring steel as explained in the chapter on Spring-Making in Volume II. Most target shooters go to the extreme when they grind down the main spring on their pet target gun and then they wonder why so many misfires should occur with a standard arm and standard ammunition, never realizing that the fault is due to their own folly.

I wish to stress here this folly of weakening the main spring of a revolver in order to obtain a higher speed of fire. If there is any one occasion on which the shooter needs perfect ignition and certainty of fire from his revolver, it is when he is practising or working up speed in the firing of five or six shots against time. Quite a number of shooters derive much pleasure from such practise, and there exists a widespread fallacy that the weakening of the main spring is an essential and practical means towards the attaining of a higher rate of fire. On the contrary, it is an extreme source of danger. The trouble lies, not in a misfire but in a hang-fire. Imagine the results from delayed ignition in the case of a shooter who can throw out five shots in less than two seconds' time; the cylinder of his revolver might be half way around to the next chamber before the bullet leaves the case. Both main spring and trigger pull should be standard weight for this sort of shooting.

Sometimes in these revolvers where the firing pin is separate from the hammer, misfires will be in evidence as a result of wear or damage to the point of the pin. In many instances it may be worn too short. Purchase a new firing pin from the factory or make one from the finest of chisel steel, harden it, and then draw the temper to a dark blue color. When fitting this new pin into the old bushing already in the frame, see that it has a free fit, not too tight, and operates freely. Too much care cannot be used in rounding up the profile of the point, as shown in Figure 129.

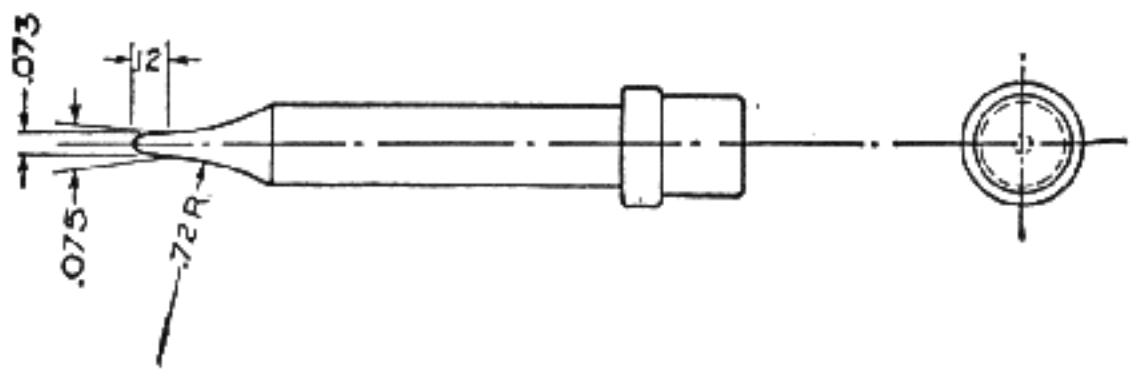

Fig. 129
Springfield striker or firing pin. Point measurements are used for all center-fire cartridges

It is surprizing how many different ideas are encountered as to the pointing of new firing pins or strikers. The usual mistake made by the amateur is to give it a sharp point as on a wire nail or go to the opposite extreme and flatten the point. Instead, it should have a one, two, or three caliber radius on the end to give the correct indentation in the primer. The profile of a firing pin for a center-fire primer is of a different shape from that required for rim-fire ammunition. Study the profile of firing pins as they are received from the factory; place a magnifying glass on them and see how carefully they have been shaped up to a certain and proper radius. If you decide to make one yourself, be careful to have it free of all file marks; these aggravate the puncturing of the primer. The point should have a high polish without any roughness whatever, so that there will be a burnished surface to the indentation where it strikes the primer.

There are times when the firing pin is in perfect shape, but the hole through the frame of the revolver is worn too large. This will often cause misfires, as it permits the hammer nose (firing pin) to strike near the edge of the primer instead of in its center. To correct this defect when there is no bushing in the frame, drill and counterbore it out, tap the hole, and make a suitable bushing of good alloy steel. This means a job for a good mechanic. The new hole must be reamed to proper size, with the correct amount of clearance from the back. Should a new firing pin be necessary, the old hammer nose can be removed from the hammer by removing its rivet, and a new one either purchased or made.

The firing pins on automatics will occasionally break and it is advisable to have an extra one on hand. Because it is of a caliber used a great deal, the Colt Woodsman suffers such a mishap at times, and it is sometimes necessary to fit in the new pin to allow a trifle more "protrusion" or make the head a bit longer in order to have it function properly against the cartridge rim. If the new pin will not explode the cartridges correctly, I usually make the next one $\frac{1}{16}$ inch longer, and instead of filing off the under side slightly as the standard pins show, I only file the two sides slightly into a wedge-shaped face. By doing this I obtain a more complete blow with the full face of the pin instead of just the top segment as on the standard.

Misfires which occur in automatic pistols are at times due to the firing spring being too stiff. Many automatics are constructed in such a manner that the hammer does not have the firing pin give a direct and continuous blow, but are operated on the principle of a rebound. The firing pin is shorter than the channel in which it operates and the sharp blow of the hammer gives it momentum enough to travel forward and strike the primer with sufficient "percussion" to explode it; upon which the firing pin comes back and lies against the face of the hammer—not against the primer—a wise precaution which eliminates the possibility of an accidental discharge of the next cartridge thrown into the chamber by the automatic functioning of the action. This spring, therefore, must only be heavy enough to return the firing pin back to its normal position. On the earlier Browning automatics this firing pin was made of bronze, but it was surprizing how well this soft metal held up under normal conditions. Therefore, when you first take apart a .45 automatic and happen to notice that its firing pin does not "reach through" like the conventional rifle or shotgun action, don't jump to the conclusion that it needs a new one.

The target shooter may go to the extreme in skeletonizing the hammer of his pistol—in an effort to lighten it and speed up its lock time—and this will cause misfires. Best remedy is to plug those holes again, which is cheaper than a new hammer, or to try a stronger main spring, altho this last may change the pull of the gun and make it harder to cock.

Checkering Metal Parts — Most of the present-day models of revolvers and automatic pistols come with various parts of the arm checkered or grooved with straight-line corrugations; triggers, back straps, safety grip, etc. This not only improves the appearance of the gun but is of decided assistance in obtaining a firm grip of the hand to the butt and the forefinger to the trigger. It is only of recent years that these great advantages have been universally recognized; the handguns of a decade ago came with plain straps and triggers. However, the owner of one of these arms can readily do this checkering with a few very simple tools.

Steel parts may be checkered with a knife-edge needle file just as readily as one can checker wood with a checkering tool, except that greater care must be exercised to space the lines evenly, as we are unable to devise or use a satisfactory line spacer for work on metal. The eye is the only gauge used to space these lines evenly, but this is not as difficult as it may sound, after you once become accustomed to the use of the file. The general rule is to file in one line first, making it straight and laying it out in the direction that will show up the checkering best; at the same time make it very distinct so that succeeding lines may be similarly laid out and properly spaced. It is not necessary to polish the surface of the metal, as the clear silvery lines of the steel show up very clearly on the blued background.

Having all the lines correctly spaced in one direction, cut the cross lines in the same manner. After all the lines have been cut in with the knife-edged file, go over them with a three-square needle file several times and deepen the lines until the diamonds are well pointed. At this operation various little changes can be made with the three-square file to straighten the lines which are a little uneven and not parallel to the preceding line. The slight variations in spacing are more readily corrected in steel than wood, as these lines are only laid out and filed in to a given depth with the knife-edge file, and then the three-square file is used. This three-square file is easily controlled by bearing harder against one side or the other, and considerable change can be made in a line, as the first cut was made with a file that was very narrow

on the edge, whereas we are now working with a file having an angle of 30 degrees to a side.

If the amateur will practise a bit on a round piece of steel he will soon be able to produce file checkering almost as accurate as that done on wood. It is a hand operation throughout, and there is no tool available which will work better for the amateur than a file on the odd-shaped metal parts. The ability to do good file checkering will become a valuable asset to any amateur, as there is much of this work which can be done to advantage on most firearms.

As a rule, the curved portion of the trigger is about the most difficult part to checker with a file; it is not impossible, but it does require considerable patience to space the lines evenly over the doubly curved surface. Some triggers are hardened, and before these can be cut with the file it is necessary to anneal this curved part or "finger piece." A piece of wet cloth or waste is wrapped about the upper section of the trigger and the curve only is exposed to the flame of a Bunsen burner or alcohol lamp, heating the part enough to draw the temper until the file will cut it freely. Start your first cut near the upper part of the "finger piece," running the line down at a 45-degree angle, and continue to form these lines down to the trigger tip, holding parallel to the angle which the first line formed. All this is done with the knife-edge file and when you have reached the end, go back and commence the cross-lines. Cross-check at a satisfactory angle down to the first series and continue out to the tip. As you space the lines you will find it rather difficult to follow the curve and end the lines evenly to the edge of the trigger, but with a little practise this will come out all right, particularly after the first few lines have been made. Finishing the diamonds is done with the three-square needle file, and it is not necessary to carry this finishing too far. The checkering on a trigger need not be as fine nor as sharply pointed as the other surfaces, as one's finger will take hold quite readily. Actually, the shallow checkering looks much the better on this curved surface and it is not necessary to have the edges too sharp. Should an annoying sharpness or a wire edge remain when the job is completed, hold the checkering against a circular wire wheel on the grinding head, and this well remove the extreme sharpness.

Some shooters prefer a matted surface in place of this checkering. This is done with a matting punch and is a much simpler operation than checkering with a file. To many, this dull matted surface is much more attractive than the sharp diamonds. The operation of matting is explained in Chapter XXII.

Those professional jobs of checkering which we often see on metal surfaces are done with a graver in the hands of some skilled engraver. A close inspection of some of this work found on the finer shotguns will show it to be purely hand work, and in many instances it is a very fine design, the checkering sunk below the surface with a neat border around it. I have never been able to accomplish what you would call perfect work with one of these gravers, and I cannot advise the beginner to attempt its use unless he wishes to go in for the very finest work and is prepared to sacrifice many long hours of patient labor in attempting to master its handling. Where it is possible to roughen the surface by matting, it will be much better for the beginner to follow this method and to finish out his work with a border of suitable design and execution.

Refinishing — After completing the checkering or matting, or the repairs on some exposed part, it will be necessary to reblue some section or possibly the entire arm. The necessary instructions for this will be found in Chapter XVI, Volume II. Often one will obtain a nickel-plated revolver with all finish gone, but these can not be blued, as the bluing solution will never take effect once the metal has been nickel plated. Nickel penetrates the pores of steel so deeply that it resists all efforts to remove it completely by any polishing operation. The best policy will be to have the arm renickeled or else chrome plated. My advice would be to have it black-nickeled if possible, as I consider this treatment better than any similar process; the color is very pleasing and the method gives a finish which is rust-preventive to a decided degree.

Hammer Alterations — The many weird and conflicting stories told of how the bad men of the Old West "fanned" the hammers of their six-guns has resulted in the desire of many of the two-gun sheiks of this day and generation to try out this foolish and dangerous stunt. After they have doctored up their Peacemaker in accordance with some of the current suggestions it is a most dangerous weapon in the hands of the average citizen.

I have discontinued making any hammer alterations of this nature, except where the user of the single-action Colt desires the hammer spur lowered a trifle in order to call his shots better. The last time I made the change above referred to, the customer not only shot himself through the side of the stomach, but the heavy .45 slug, after passing through him, lodged in the elbow of a friend standing nearby, causing the latter to lose the use of that arm for life. It is not at all unusual for the owner

of one of these doctored-up "slip hammer" guns to discharge it accidentally as it leaves the holster.

The Colt single-action Army model is the only revolver which will operate by tying back or removing the trigger and then "fanning" the hammer. This is because the hand which operates the cylinder is connected to the hammer; on a double-action gun it is operated by the trigger, and when we tie back this trigger we are unable to rotate the cylinder. Quite a few of the drawing-room cowboys who recommend this method of shooting are unaware of the fact that a double-action gun cannot be "fanned."

However, many shooters do object to the high spur on the hammer of the single-action Colt. A definite and helpful change may be made by heating and bending down this spur. To do this, first remove the hammer, drive out the drift pin which holds the firing pin in place, and then drive the firing pin out from the rear. Clamp the hammer very firmly between the copper jaws of the vise, exposing nothing but the spur above the jaws. With an acetylene or blow torch, heat this spur to a red heat, up to where it joins the body of the hammer. With a round piece of copper rod as a drift, gradually tap the spur down to the desired position. When cool, the spur can be finished and then polished. After polishing, the spur is rechecked and the hammer should then be re-case-hardened as explained in Chapter XVI, Volume II. Be very careful to have the hammer properly and tightly clamped in the vise and only bend down the spur; if the body of the hammer is bent in the slightest the firing pin will no longer strike center, and it is a very difficult operation to try to bend the neck of the hammer back again so the firing pin will center properly once it is out of place. When the hammer spur is altered in this manner the line of sight is not obstructed, except momentarily by the nose of the hammer in falling; and if desired, a considerable amount of metal can be filed from the top of the hammer, which will eliminate even this objection.

Loose Screws — When a single-action Colt comes in for repairs the owner often asks us to tighten up all screws which have worked loose from vibration and then fix them so they will not come loose again. The only positive manner in which this can be done is to drill and tap in smaller screw threads alongside the faulty screw heads, and place small anchoring screws in there. Use small fillister-headed screws and place them in the manner seen in some rifles and all automatic shotguns; then it will be impossible for the larger screws to turn loose. We cannot rust or tin in these loose screws, because it is only a question of time before the gun must again be taken apart to change some broken part.

Changing Cylinders — Many owners of these Model 1917 Colt and Smith & Wesson war-time revolvers wish the cylinders replaced with ones taking the old .45 Colt cartridge. It seems to be a widespread idea that this change is easily made, but after the owners have purchased the new cylinder and tried to fit it they discover that the substitution is not as easy, or as cheaply made, as they were led to believe.

There is quite a difference between the Colt New Service .45 and the Colt Model 1917 double-action revolvers. The Model 1917 was made on the New Service frame, but to the thickness of the head of the .45 automatic cartridge was added the thickness of the steel clips, making a much greater "rim" thickness than found on the old .45 Colt cartridge head. The cylinder and side plate were both changed in order to accommodate the Model 1911 Automatic cartridge; on the New Service frame the swung-out cylinder is held in place by a raised surface. In the 1917 Model this raised surface was relocated in order to take care of the shorter cylinder; therefore in order to interchange cylinders it is also necessary to interchange side plates. Such work requires much fitting, involving both side plate and crane; and each crane is also fitted individually.

On the Smith & Wesson Model 1917 they used their .44 caliber frame, and made up a new cylinder and barrel suitable for use with the clips. It is not remunerative to alter this arm, for by the time all the necessary new parts are ordered and the work is done, a new revolver could be purchased for less money.

And in the end all this changing of cylinders is impractical for the reason that the Model 1911 Automatic cartridge is equal in ballistics to the .45 Colt cartridge when loaded with smokeless powder. If the owners of these Model 1917 revolvers do not like to use the Model 1911 rimless cartridges there are available special rimmed cases which eliminate the necessity of using the steel clips.

Odd Alterations — I receive frequent calls to change many hand-guns for other than the standard cartridge originally intended to be used; alterations which no arms company will undertake or recommend. The nature of these alterations often calls for extensive experimental work, and special tools and reamers must be made to accomplish the undertaking. Alterations such as boring out the single-action Colt and other .45-caliber revolvers to use

shot cartridges; rechambering different arms to take the .22 Hornet cartridge, and bushing cylinders and relining barrels to adapt the .22-long rifle cartridge to the larger caliber arm. We cannot say that it is impossible to do such work, but there is really only one man in a thousand who is willing to pay a fair price for the work involved. If the shooter has available the proper equipment he can readily carry out such ideas for himself, but he must possess an extensive mechanical knowledge and will find various machine tools required to work out the many new ideas which will continually be placed before him by others. I shall give here only a few ideas which can be carried out without going into too many details.

Shot Revolvers—Many owners of .45 revolvers wish to have them changed to shoot shot shells and will load their own ammunition for such a purpose. The arm modified is the Colt single-action revolver bored smooth by reaming out the rifling in the barrel. The .45 is not the most suitable caliber to use, as it is necessary to ream out this barrel a bit too large to give a satisfactory pattern. A .44 arm should be selected, and the cylinders reamed to take the .45 Colt cartridge. A barrel length of 7½ inches will give the best results after being reamed to 0.450 inch and the muzzle given a slight choke of at least the length of the shot column when in the case. By reaming out the rifling from a .44 barrel the increase in size is just about right for the choke necessary when the main bore is reamed out to 0.450 or 0.452 inch.

To do this reaming operation properly, three reamers should be made; one roughing reamer, made with spiral flutes, to remove the rifling from the barrel; one finishing reamer, which can be made with straight flutes—this also has the reduction on the end to give the required choke at the muzzle; and one chambering reamer for the cylinder, made straight with the required cone on its end to ream ahead of the chamber. There must be a certain reduction in the front end (or "leed") of the cylinder chambers in order that the shot charge may be carried properly into the barrel. The diameter of the .45 Colt case is 0.471 inch, and 0.002 inch must be allowed for free and easy extraction of the fired case, with an additional 0.002 inch taper to the rear, which makes this rear portion of each chamber 0.004 inch larger than the mouth of the unfired shell. In Volume II you will find correct methods described for making all these types of reamers, and when they are made as described, a very fine job of reaming can be done with them.

The necessary reaming operations are done in a lathe, and in order to obtain the best results the reamers are pulled through the barrel from the breech end. Use a good grade of lard oil as a lubricant, and keep the roughing reamer well lubricated so that the bore will not have torn places and rings so deep the finishing reamer will not remove them. After the roughing reamer is used, the finishing reamer follows, being pulled through in the same manner. Have this marked so that it will not run in too deep and spoil the choke; the desired choke can be given after this mark is reached. Run the lathe at a moderate rate of speed for all the reaming operations on the bore and choke; that is, run the lathe with the back gears in and have the barrel chucked perfectly true.

The reaming of the cylinder should also be done in the lathe, but this can also be done by hand if considerable care is exercised. The barrel-finishing reamer is first passed through each chamber in order to have the chamber "leed" the exact size of the bore. Then the chambering reamer is used with the ejector web in place in the cylinder. An accurate stop should be made and set so that the depth of each chamber will be the same. Plenty of lard oil should be used to lubricate.

After the reaming operations are completed, the lapping of the bore and of each chamber in the cylinder is in order. This operation is thoroughly explained in Chapter XXV, Volume II. Shot is easily affected at the choke in a short-barreled gun and it is necessary that the muzzles of these pistol barrels be finished off straight and square instead of having the crown seen on all revolver barrels. It is best to trim this off square in the lathe while you have it out of the frame instead of trying to do it by hand with a file and with the guidance of your eye. The lathe operation will assure its being square and true.

The breech end of the bore must be chamfered or given a slight taper so that the shot charge will enter the barrel evenly, even tho the cylinder should be out of line the least bit. If you do not have a tapered reamer for this operation, chuck the barrel perfectly true and turn out the chamfer with a small boring tool, by means of the compound rest set over at an agle. The greatest length of this chamfer should not be more than one-fourth inch and it need only be 0.010 inch larger than the bore at the part in front of the chamber. While the barrel is still in the chuck, polish this taper with fine emery and crocus cloth. Having all this completed, go over the action and place it in perfect condition, screw the barrel back into the frame, and we are ready to proof-fire the gun.

In the proof-firing, it is not necessary to set the barrel in the frame very tight; catch it between the felt jaws of the vise and set it up tight against

the shoulder with the pressure of your hands. The sight may be a little off to one side, but the main object now is to see if the patterns obtained by the choke are sufficient.

Pattern the revolver at 10, 15 and 25 yards for a series of exact results. If the patterns obtained are too small it will be necessary to lap the muzzle choke a little larger; but if the patterns are too large a special lap must be made of an oval form, constructed so that it is expandable, which makes it possible to enlarge the inside of our choke without touching either front or rear. The chapter in Volume II on "Shotgun Repairs" describes the proper method.

It may require from three to six trials and alterations before a pattern is obtained that will meet your expectations. At the same time experiment with various loads of powder and sizes of shot until the best possible combination is reached. After you are satisfied with the pattern, set the barrel properly and tightly in the frame and bring the impact of the pattern where you wish it to shoot on the paper target; this is obtained by the adjustment of sights as previously described.

I once made a pair of these .45 shot revolvers for two young men who toured the different States and gave exhibitions of their shooting skill on glass balls thrown into the air. They realized well above their expenses out of the trip and led the audience to believe they were using the regular ball ammunition for all this aerial work. The account of some of their experiences was rather humorous, especially when some fraternal brother's curiosity would get the best of him and he would insist that the boys shoot one of his pet handguns. Certain sections of the country were easy to work with this racket, but some parts were not so good.

Relining Revolvers — To reline the large-caliber revolvers and chamber them to take the .22-long rifle ammunition or to use the .22 Hornet, .25/20 and similar cartridges, requires not only the relining of the barrel but the bushing and chambering of each chamber in the cylinder as well. The relining of the barrel is not much of an operation provided you have the necessary tools and equipment to do the job, but the sweating of the bushings into the cylinder calls for a considerable amount of skilled work. Not only that, but you are also obliged to make and fit a new ejector and a cylinder ratchet. When the change is made to adopt a rim-fire case like the .22-long rifle, the firing pin will also probably have to be changed, and this alone requires some close engineering. These changes are not impossible, but in a great many instances they are just not practical. With the splendid selection of large-framed .22 rim-fire revolvers and automatic pistols now available there is little need for any shooter to transform any handgun to take this excellent cartridge.

Single-Shot Pistols — Very often it is possible to pick up some of the famous old single-shot pistols of a generation ago that were made by the J. Stevens Arms and Tool Company; the Lord, Conlin or Gould models or the little Diamond model. Invariably they will be rusted out in the bore, possibly the action is a bit shaky and the sights missing.

About the only thing we can do with these arms today is to reline the barrel to its original caliber and place the sights back in proper condition. These arms were made in a day when the velocity of the long rifle cartridge was about 900 feet and it was loaded with black powder. I would not advise using many of the present Hi-Speed .22 cartridges in such an action. Then the round and thin grip on these pistols is a hard one to alter or to build up properly according to our present-day tastes. Better place the old relic in first-class condition and keep it in the collection as a memento of the wonderful scores which it made in its day.

The little Diamond model is an exception as regards fitting with a suitable and proper grip; it is easy to fit this with an entirely practical "man-sized" grip, and one then has a most accurate and handy light-weight pocket pistol in .22 caliber, provided the ammunition used is not too powerful for the arm.

The average gunsmith receives very little single-shot pistol work today, other than the usual slight changes in sights, trigger pull or relining. However, once in a while some one shows up who wants a pistol rechambered and bored to take a different and far more powerful cartridge—say the .22 Hornet, or the .25/20. The old Remington single-shot navy pistol of .50 caliber is about the best basis for this sort of work. Figure 130 illustrates one made into a Hornet. Here is one of the safest actions known, and an easy one to work on. All attempts to produce a discharge from this arm when the action is not properly closed will fail. Their unusual strength and weight make these guns desirable for heavy charges and experimental cartridges; as a matter of fact, they will stand a much heavier charge or cartridge than may be fired from one hand with comfort. So, when the customer shows up who is insistent on some peculiar conversion job to be attempted on a modern revolver, talk him out of the idea or at least have him try it out first on one of these old .50 caliber pistols.

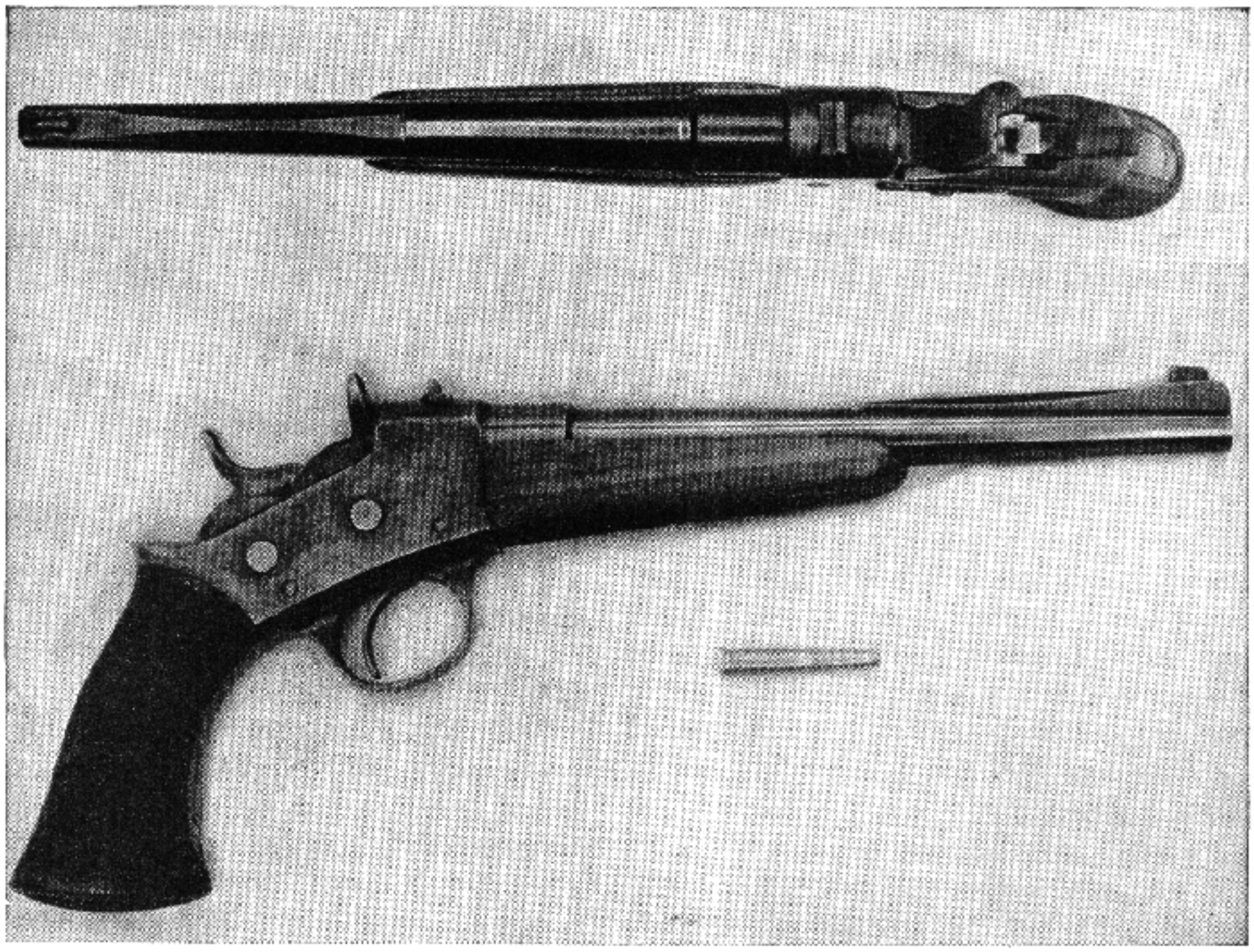

Fig. 130
Caliber .22 Hornet made on a Remington caliber .50 pistol action. Remarkable accuracy resulted from this combination

Trigger Stop Screw — Here is a minor alteration which may be made in revolvers and prove a great help to target shots. When a double-action gun is used in the conventional single-action manner and the hammer cocked for each shot it will be found that when the trigger "breaks" from the hammer notch, there is a slight back action sufficient to throw out the aim perceptibly. This back action of the trigger may be prevented by placing a small stop screw through the trigger guard from the rear, and adjusting it so that when the hammer falls, the trigger is at the limit of its travel to the rear. When fitting this screw, the threaded hole should be slightly tapered so the screw will fit very tightly. Use a 3 x 56 headless screw, and have it just long enough so that when properly adjusted it will come flush with the rear of the guard; then it will never interfere with or skin the knuckles. Figure 126 shows the idea properly.

General Hints — After you have cleaned or repaired a handgun, be careful how you lubricate the working parts. Use only No. 1 sperm oil for this purpose, and if you have used any other oil or solvent designed for cleaning the bore and chambers, see that it is carefully wiped off the mechanism. Too much lubricating oil is dangerous in the mechanism of a revolver or automatic pistol; it may gum up—or in cold weather will freeze—and render it impossible to fire the arm without first "working off" the stiffness by snapping the action a few times.

Keep the hammer free of rust under the spur, and also keep rust from around and on the nose of the firing pin. Keep oil on these parts.

In dismounting the crane and cylinder from the frame, slack but do not turn out crane-lock screw, for it is possible that the crane lock will be lost-together with the screw. Do not try to unscrew the ejector or ratchet off the ejector rod in order to clean them. If any rust has collected between the rod and its spring, wash well with some light powder solvent, allow to stand for about 30 minutes, and then oil with light sperm oil.

Do not try to dismount an automatic pistol with a hammer and set of drift punches, for all parts of these arms can easily be dismounted (generally by hand) if instructions are followed.

If the double-action pull of a revolver is heavy, examine the end of the crane, strut, ratchet, etc., for burrs raised by a hard trigger or other causes. If burrs are found, remove them with a needle file. On a Smith & Wesson revolver it is possible to overcome a heavy double pull by reducing the re-

bound spring. To test the free working of trigger, hand and rebound lever, pull off at double pull, then let the trigger move forward slowly and pull back again before heel of the trigger engages hammer strut. If a rub is felt, remove plate and examine parts mentioned.

To test free working of hammer and strength of main spring, hold trigger back and work hammer with the thumb.

Keep rebound levers clean and free of rust, especially where end of rebound springs bear.

Always keep the strain screw tightened on a revolver. This strain screw is set to bear upon the main spring. If you wish to practise by snapping the arm—"dry shooting" they now term it—you can relieve this screw just so the hammer has a good, sharp fall, but not as hard as when the strain screw is properly set. One turn back will usually lighten it sufficiently for "dry" target practise.

Inspection of Handguns — Every so often, these days, I am approached by some friend or acquaintance with a hearty handclasp and the question: "Chap wants to sell me this six-shooter, is it all right?" The subject handed over for inspection and comment may range from an old Army model Colt single-action offered at five bucks, to a recent .45 Automatic with the prospective purchaser considerably excited over the "United States Property" stamping on its side.

As the shooter of any technical standing whatever has had this same experience happen to him, I am outlining herewith a rather extensive process of inspection which will readily indicate the exact condition of most handguns which may be presented for such opinion and decision.

This program is offered with the qualifying statement that it will undoubtedly prove a waste of time to employ the procedure when purchasing a new handgun of any of the leading American makes; in fact, the quickest method I know of by which the correct tolerances such as I have outlined can clearly be gotten to mind, will be to examine a new Colt "Shooting Master" or a Smith & Wesson "K-22." The tests I enumerate should prove of most value in instances where a supply of obsolete models is available, and careful selection from the lot is possible.

How to Select a Good Revolver — First, clean out the bore and chambers, and examine their condition in a good light. The bore should be bright throughout its entire length, with no pit marks, and the edges of the lands should be clear and sharp. There should be no dents in the muzzle nor should the latter be "belled" through improper use of a cleaning rod. Each chamber of the cylinder should be clean and free of rust spots and pittings, and there should be no visible scratches which might cause faulty extraction. In the case of a .22, look closely and see that the "leed" has not been eroded unduly through the excessive use of .22 shorts.

Cock the hammer and hold the gun up sideways to the light while you examine the clearance between face of cylinder and rear end of barrel. There should be a minimum of light showing, and this clearance should remain the same with each chamber as the cylinder is revolved. The end of the barrel should be square and true from both sides. There should be no appreciable play back and forth when the cylinder is worked lengthways with the fingers.

Cock the hammer and examine the sideways play when cylinder is locked in position for firing. This is a most important point with any accurate-shooting revolver, and the play here should be very slight. Also, it should be the same with each chamber; cock and try by hand every chamber in the cylinder with hammer *cocked,* as there may be appreciable play when the hammer is down and yet none when it is raised.

Swing out the cylinder and test for rigidity; neither cylinder nor crane should show loose play. Slide ejector rod back and forth to test its fit and working qualities; it should slide back freely and be returned to place readily by its spring. Examine closely the ratchet on end of ejector rod; this should have clean, sharp edges and not be worn or burred to any extent. The cylinder stop in bottom of frame should still have clean, sharp edges and be of full width (not worn wedge-shaped); it should also work freely and positively; depress it with the forefinger a few times and see that its spring still has "life."

With the cylinder swung out, snap the hammer, and by holding the trigger down, test firing pin for protrusion; it should project sufficiently to explode the primer. Notice for wear or corroding away of the firing-pin hole; this should not be enlarged to any extent. Notice pawl or dog which rotates cylinder; this should have no loose play and should not be worn away too much on upper end, but should rotate each chamber completely to its locked position. If chambered for the .22 rim-fire cartridge, examine outer rim of cylinder under where firing pin or hammer nose rests; this should not be burred or dented to any extent.

Cock hammer and notice condition of loose hammer nose; this should be clean, not corroded away any, and must have considerable play. The cavity into which it fits should not be rusted or eaten

away with primer corrosion. In the case of a revolver having separate firing pin, the latter should work freely and be of sufficient length to function properly; the rear end of this firing pin should not be burred over, and the spring should not be rusted or stuck.

Snap the hammer a few times and notice its action; percussion should be good and the trigger should snap back smoothly and quickly to its forward position. Test the double-action pull; this should work smoothly and the hammer should "break" cleanly from the notch when it falls. When at full cock, the hammer should notch at the rear of its travel; there should be but slight additional rearward play.

The side plate should not be "sprung" away from the frame at any point, but should fit flush all around. The screws which fasten it should not have burred heads or torn slots; if there are indications of such it may mean possible repairs in the past, or at least the dismounting of the arm by an unqualified person.

Grips should fit to the butt with no loose play. Checkering is best with clean and sharp diamonds which have not been worn smooth. Sights should not be bent or dented, and in the case of target guns, should have no lost motion.

In the case of an obsolete Army side arm, or a gun bought from any large stock of standardized weapons, such as discarded police models, check up on the serial numbers found on the butt, frame, cylinder and barrel, and make certain these are all the same. The gun may be an "assembled" job, made by fitting together a lot of spare parts with new barrels or such, and if so, you don't want it. The color of bluing of all main parts should be of the same shade or show an equal amount of wear. If there are no serial numbers showing, or if there are indications of these having been altered or ground off, turn the gun down.

If, in your search for truth, you find the words "SPAIN" tucked up under the trigger guard, or "Made in Spain" in small type, or the wording "for SMITH & WESSON ctg." with only the Smith & Wesson part readable, don't accept that gun as a gift—the donor has it in for you.

"The proof of the pudding is in the eating thereof"; so if it is at all possible, take the gun out and shoot it with a few rounds of service charges before you lay down your money.

Suggested Test of Automatics — First clean out the bore and examine it in a good light. The bore should be bright throughout its entire length, with no pitting marks, and the edges of the lands should be clear and sharp. If the edges are worn or rounded over, especially near the breech, it indicates considerable wear.

The following remarks apply more particularly to the government model .45 automatic:

Test the slide for fit on receiver: There is a certain amount of play in all .45 automatics, but the play or shake of the slide on the receiver should not be excessive.

Test the safety lock: Cock the hammer, then move the safety lock upward into the "safe" position. Grasp the gun as usual, so that the grip safety is depressed, and squeeze the trigger forcibly three or four times. If the hammer falls the safety lock is worn.

Test of grip safety: Cock the hammer and, being careful not to depress the grip safety, squeeze the trigger three or four times. If the hammer falls the grip safety is worn or defective.

Test of the half-cock notch: Draw back the hammer until the sear engages in the half-cock notch and then squeeze the trigger. If the hammer falls there is a defect in the hammer or sear and one or the other will have to be replaced. Draw the hammer back nearly to full-cock and then let it slip out from under the thumb. It should fall into half-cock.

Test of sear engagement: Grasp the stock of the gun with the right hand, and, squeezing the trigger and grip safety and keeping them squeezed during the test, with the left hand draw back the slide to its full rearward position and let it snap forward. The hammer should remain cocked. In guns in which the sear or sear notch in the hammer are worn or in which the trigger pull is too light for safety, it frequently happens that on repeating this test several times the hammer will follow the slide down. If they are in good condition and the trigger pull is proper for safety, the hammer will not follow down.

Test of disconnector: Shove the slide a quarter of an inch to the rear. Hold the slide in that position and squeeze the trigger and grip safety. Let the slide go forward, maintaining the pressure on the trigger and grip safety. If the hammer falls the disconnector is not working properly and must be replaced. Pull the slide all the way to the rear and engage the slide stop, squeeze the trigger and at the same time release the slide. The hammer should not fall. Release the pressure on the trigger and then squeeze it. The hammer should then fall. The disconnector prevents the release of the hammer unless the slide and barrel are in the forward position safely interlocked. It also prevents more than one shot following each squeeze of the trigger.

Disassemble the pistol and examine the following points for signs of wear:

The lugs on the bottom of the barrel. In old pistols which have been used a great deal these lugs show battering on the back. In the receiver, at the point where these lugs strike, an old gun will also show a print of the lugs compressed into the metal. Excessive wear at this point should serve as a warning against the purchase of the gun.

Examine the slide-stop notch on the slide. If it is badly worn and battered, reject the gun.

Examine the slide both inside and outside just about where the front end of the receiver comes when the gun is assembled, and look for cracks at this point. In many old automatic pistols the slide cracks here and these cracks gradually become worse with use.

Examine the magazine carefully for shape and condition of the lips at the top. Magazines fail ordinarily by having these lips bent out of shape and also by the occurrence of cracks at the corners of the magazine at the back near the top.

CHAPTER XXI

Problems of the Trigger Pull

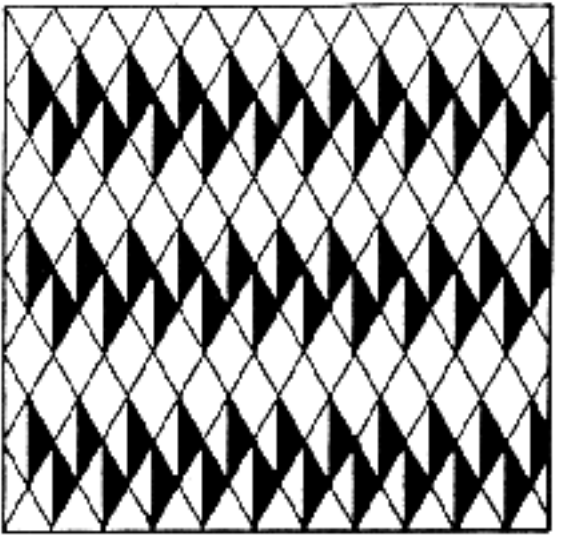

CHAPTER XXI

Problems of the Trigger Pull

ONE of the most mysterious parts of a firearm is the trigger mechanism, especially when the student begins any alteration to secure a better pull. So much has been written on this subject that probably every one owning a firearm has made some kind of attempt to improve the take-off and allow a more free and easy pull on the trigger. Some have been successful in their first attempt while others have ruined this part entirely, necessitating a replacement which is rather costly in some instances. Most firearms which come from the factory or even the government armory have trigger pulls which range between 4 and 12 pounds. The trigger pulls on fine shotguns are usually adjusted down to about 4 pounds, while on the cheaper class of the same arms the trigger pulls vary from 4 to 14 pounds. Every firearm should have a safety factor at its most fallible point—the trigger mechanism.

A large percentage of the public who purchase firearms do not take into consideration the danger connected with their use, and in order to place the so-called "breaks" in a convenient location to make them think, the hard trigger pull is the standard, and is the controlling factor on a firearm which provides time for a thought to register. Another advantage of the hard trigger pull is the fact that the arm cannot easily be discharged by accident. Accidents happen to the experienced as well as to the inexperienced person, and a firearm will discharge itself by a sudden jar if the pull is too light.

The hammer or cocking piece should be well supported by the full width of the sear, and the leverage of the trigger increased to a degree where the finger requires some force to pull the sear from the notch. To solve the problem of creep or take-up, reduce the finger pressure within the reasonable limits of between 3 and 4 pounds, and at the same time remove any perceptible creep.

Triggers are divided into five classes from the standpoint of mechanical arrangements and their action under finger control from the trigger. These are: the plain trigger, bolt-action trigger, set triggers, the shotgun single trigger, and the trigger mechanisms on automatic pistols.

Plain Trigger — To classify plain triggers in the proper manner would necessitate going into the history of firearms and following the development in the arrangements of the sears to the tumblers, and then the trigger in direct contact with a notch in the hammer The last is before us today in the independent or loose form in shotguns, and the sears are engaging factors which should be altered by stoning at the engaging points, the tumbler notch and end of sear.

Before advancing to the actual work of reducing trigger pulls, the student should be familiar with the mechanical features not only of the plain trigger, but of the other triggers which come under the same heading. Study the different types of levers, as these may be of interest when you want to know what points to start and stop at, in order to reduce or increase a trigger pull to suit a particular condition. We may also refer to mechanical diagrams to prove the composition and resolution of forces, but as we are not constructing a new firearm these will not be essential, so we will get down to facts in the actual work and show the direct working cause.

In all plain-trigger mechanisms, there are either two or three essential working parts to consider: the hammer (or tumbler), and trigger or tumbler, the sear and trigger. These arrangements are in shotguns, single-shot rifles, revolvers, pump-action arms, etc. On some single-shot rifles and automatics as well as rifles and shotguns there is an intermediate sear. These hammers also have the half-cock and full-cock notches. In such cases the sear is really a part of the trigger itself, except that it is arranged in such a manner as to give greater leverage and thus increase the safety factor between the two.

To decrease a trigger pull and eliminate the drag or creep requires much patience, but the only appliances required are an oilstone and the necessary tools to disassemble the arm. The oilstones required are ¼-inch, three-cornered, fine knife-edge, and Arkansas stones in the same forms. The oilstones come in various sizes and are listed in the diameter of which they take form. A ¼-inch stone simply means one that measures one-fourth

inch across. Length is usually set at a standard; therefore any one wishing a selection of stones should consult Chapter I, or a specially prepared display board shown in any up-to-date hardware store. In addition, there should be included a jeweler's eyeglass of low or medium power to inspect the surface that is being worked on, in order to detect any unevenness or rocking motion of the stones.

When working on a trigger pull, the first operation is to polish all parts. If you do not have polishing heads or motors, finish the flat surfaces (do not touch the contact points) with fine emery and crocus cloth; then stone the contact points to reduce the pull. In all stoning operations, a trigger tester is a handy part of the equipment; this is a small round spring scale which records weights by quarter pounds up to twenty-five pounds.

To obtain the required pull on a plain hammer gun, note carefully the shape of the sear and the flat surface where it engages into the notch. Some have a sharp point. Then study the notch in the hammer in its relation to the end of the sear. Most rifles come from the factory with the sear engaging heavily and this is the cause of nearly all heavy trigger pulls. They are made so for safety. When the trigger is given any tension it must travel out of the notch. "Cam" the hammer back some distance before it is clear; this is operating against the force of the main spring in its full compression. By stoning the notch and end of trigger parallel to each other, and at right angles to both the hammer and trigger center, the reduction in the pull is very appreciable. Therefore, in squeezing the trigger you have eliminated the cam effect upon the hammer.

The beginner often makes the mistake of stoning the hammer notch in a manner that allows the trigger to disengage at the slightest pressure, for the spring tension allows the hammer to ride free over the trigger. Naturally this is a dangerous condition, for a slight jar would cause the accidental discharge of such an arm. A very simple test for this is made by placing the thumb on the hammer and applying pressure; the result is that the hammer falls as tho the trigger were pulled.

To secure the most satisfactory pull, start with a three-cornered fine oilstone stone the notch of the hammer at a right angle or near to a right angle, then stone a slight radius on the trigger. Too much care cannot be used in performing this operation to avoid placing a rounded contact point in the center of the trigger as well as of the hammer. An inspection should be made to see that too great an amount of travel is not left upon the hammer notch, for this produces creep. When this has been accomplished and your judgment pronounces it as perfect as possible, polish the contact surfaces with an Arkansas stone to the degree of luster. Assemble them and test for the pull. It may not be correct, but you will discover a marked improvement with the efforts made on the first attempt. I would not advise any lighter pull than four pounds, except on a target revolver or rifle in this class. The reason I have cautioned you to use so much care in stoning trigger and hammer notches is because of the timing of the trigger and hammer. These have been made a certain length, and if too much metal is removed from the end of the trigger, it may throw some other part out of time. Generally very little stoning will accomplish the desired results.

In stoning the notch on the hammer, the three-cornered stone should always have a sharp edge, for if it is not kept sharp, it will round the inside of the notch. A certain amount is permissible, but too much is decidedly a detriment. The use of a file is not advisable in reducing trigger pulls, for in the hands of the inexperienced it removes too much metal. In a number of cheap arms the parts are soft and the use of a file, at times, is an advantage; however, a good oilstone may always be relied upon to produce the best results. Many hammers and triggers, particularly in the cheaper arms, have but a tough outer hardened surface, and when the slightest amount of stoning is applied to these, the parts become very soft at the contact points. Such parts should be case-hardened after they are reduced and then polished with the Arkansas stone before assembling.

To test a hammer and trigger for true parallel surfaces against each other, square the trigger contact surface. This may be done in two ways: first, with a small knife-edge square held against the side of the trigger with the blade over the contact point, secured by clamping the trigger against a square block of steel. Only allow the contact point to project slightly at the desired angle, and with a fine oilstone lying flat on the top of the block, continue to stone and raise the trigger until a true parallel surface is produced. With the oilstone, carry out a true radius by stoning lengthwise, meeting at a square top. A trigger stoned in such a manner is certain to be perfectly square, and this is the only reliable method to use when working to precision limits.

Having established a perfectly square contact surface on the trigger, the hammer must be done similarly, but in a different manner. Before assembling the parts, coat the surface of the notch

with the coppering solution given in Chapter XVI, Volume II. This may be applied with a toothpick. When all parts are assembled, apply pressure to the hammer by pressing it forward with the thumb, and at the same time disengage the trigger from the notch with the index finger. This treatment will show the high point which must be worked down with the fine oilstone until the contact surfaces are perfect when in contact with each other. A number of trials will sometimes be necessary to secure this perfect condition. When stoning a hammer in this manner, clamp it securely in the vise between lead jaws, for if such parts are held in the fingers, very unsatisfactory work is the result.

If a notch is made unusually deep—and this is often encountered on some hammers—rather than reduce the hammer or hammer radius, a small pin can be set in. A No. 54 drill is used first; the hole is enlarged with a No. 52 drill, and a piece of $\frac{1}{16}$-inch drill rod is driven into the hole. File off the pin a little at a time until the trigger is permitted to engage the hammer notch at the correct depth, giving a clean pull without the least indication of any creep, and at the same time being deep enough so that the hammer cannot be jarred off in any way. Another method which can be used to overcome the same condition when a drill press is not available is to tin this part and place a drop of solder in the notch. File it off until you can secure the same crisp pull as described by placing in a piece of drill rod.

Revolvers — I shall only refer to target arms under this heading and disregard the cheaper arms altogether. The rules of the United States Revolver Association allow a minimum trigger pull of $2\frac{1}{2}$ pounds for revolvers in the "Army Revolver" Match. For single-shot pistols the minimum pull is 2 pounds. For military revolvers and pistols or pocket revolvers, such as service arms in the police departments, the minimum pull allowed is 4 pounds. There is also a special match based upon the international rules, with no limit on the trigger pull. Since all trigger pulls are tested before the matches by means of a trigger tester registering the pull, each individual should be very particular in correcting his arm to meet the prescribed rules.

When a user of a target revolver attempts to doctor up his pull, it usually results in returning the weapon to the factory; or if it happens in my bailiwick, the sad report of a new trigger and hammer reaches me. For the beginner this is a job requiring considerable forethought, and too much care or patience can not be exercised. The *character* of the pull is really most important. We express this in words to the effect of "its smoothness," which is better than the pounds in weight. When stoning a trigger and the hammer notch, strive for smoothness first; eliminate the creep and grating condition with your first attempt, before any actual work is started on a trigger or hammer.

By removing the side plates on either a Colt or Smith & Wesson revolver, the student can study the mechanism of these arms. On a Smith & Wesson revolver, by removing part of the tension on the strain screw, it may be placed in the cocked position. Release the trigger gradually and note the disengaging feature of the trigger out of the hammer notch. The character of the pull depends upon the rubbing surfaces, and the distance the trigger must travel to disengage from the notch. There should be practically no tension on the spring during this examination. Now, gradually tighten up on the strain screw, and note the difference.

When making this examination and study, it will be well to use a reading glass of rather high power, fastened upon a stand in such a position that the working parts will be greatly magnified and enable you to judge what is to be done much better than you could with the naked eye. One particular point which will arrest your attention is the nose on the trigger, and this calls for a word of explanation. When there are only two engaging parts, the trigger and hammer, the former is really the sear. In such a case it is rather confusing, for in many arms the sear is a separate unit from the trigger. Therefore, to simplify the explanation, it will be best to use the term "trigger" when this is the engaging unit, and "sear" when it is a separate unit as in a shotgun.

The beginner may be assured that he will experience very little difficulty, for with study and practise he can learn to stone these parts successfully. Having the fine oilstone necessary for stoning other triggers, place a very small radius on the engaging part of the trigger (you have probably noticed that this was rather a flat surface), then polish it with the Arkansas stone. Very little can be removed from these points because the tolerance is very small; this is also the reason for using the finest of stones. The hammer notch is next. A watchmaker's magnifying glass is rather an essential addition to such operations, so that the tool marks, etc., may be seen, and also to show the results of the stoning done upon this surface. When stoning these ends and notches, the parts should be held in a small vise in a convenient position so that you can see every little movement of

your stone and at the same time have the freedom of your arms and hands so that you can detect any rocking motion of the stones.

Assuming that you have finished these parts and used the utmost patience and have only in a sense polished the engaging points, reassemble them again in the gun and test it to see what improvement has been made. Undoubtedly, you have eliminated the creep, etc., and have a clean pull; but the weight was not reduced materially, because the notch is too deep in the hammer. The next step is to strive for a lighter pull. To reduce the pull it is necessary to reduce the bearing surface on the hammer notch so that the trigger does not have so far to travel and slide out of it.

When stoning an angle in the hammer notch, care must be used in every movement of the stone; hold it so that it is possible to reduce it without removing too much. The Smith & Wesson revolvers have a very shallow notch and greater care must be given these arms than the Colt, for it is very easy to remove too great an amount at first. It may require from two to six trials before you get the desired pull and still retain the safety factor. The factories strongly advise against touching the hammer notch; nevertheless, this is the secret of a very fine pull in these arms.

At times the use of a very fine needle file is permissible, providing it is used carefully. Frequently the parts are so hard that it is impossible to use a file, and the trigger notch projects so far that an oilstone can be used to greater advantage. A word of caution will be timely here; the beginner should always use the fine oilstones until he becomes proficient in the use of files for such work. There is not one man in a thousand who can use a file to advantage in reducing trigger pulls, so as a student doing this class of work, use the oilstones and you will spoil fewer hammers and triggers.

A serious error that many amateurs commit is to weaken the main springs in order to get a much lighter trigger pull. By no means should a main spring be weakened by grinding or should the strain screw be loosened in a Smith & Wesson revolver. A bad habit of many owners of revolvers is to grind either the top of the main spring or the under side. Such principles are wrong in all respects and the results are many misfires. The owner usually blames the primers or ammunition instead of his own folly.

Automatic Pistols — To reduce the trigger pull on these arms requires considerable judgment, and to reduce a pull below 4½ pounds is at times courting much trouble. Because of the mechanical arrangements of triggers, sears, and hammers, on the Colt, Savage, Remington, Luger, Mauser, etc., and because of the principles of their mechanism, I have placed these in a separate class. It would be impossible to class these with the plain trigger because of the complicated method of their working forces; therefore, they must be classified separately as "automatic."

It is always better to have a trigger pull a little heavy on an automatic. If it is light, the danger point is raised, as the working of the action jars the hammer off the sear and results in misfires.

You can not study the working parts in an automatic pistol as you did on the revolvers, but you can study the principle of them by carefully disassembling the parts. The Colt caliber .45 is a good subject to work on. When stoning the sear, extra care must be used in order not to stone an angle on these surfaces, for this will allow the sear to disengage upon the sudden backward throw of the slide. Very little stoning is permissible in order to reduce the pull, but an amount which will lead to an angle is too much. Another point to remember is not to stone too much off the angle of the sear or not to place too great a radius on the end. A very slight amount is all that is required. It is rather a long-drawn-out "cut and try" proposition when reducing a pull on an automatic, so you must be prepared to spend a considerable amount of time on such arms. This is especially true of a Mauser or Luger automatic; yet the Luger is much easier in comparison with the Colt. A Mauser has so many functioning parts that working on them requires patience. Too much care cannot be used to avoid spoiling a part, for they are rather expensive.

The main problem in stoning down sears, links, and intermediate sears in the arrangements of the parts, is to eliminate creep as much as possible. Therefore, it is necessary to stone a fine surface on all the engaging points. On the lesser arms, such as the small pocket models, I do not advise trying to reduce the trigger pull, for these arms are not made for target work. When I receive a request to do such work, I usually discourage it, for it consumes too much time; besides, it is far better to leave a hard pull on these weapons because they are frequently in the hands of inexperienced shooters.

Bolt-Action Pulls — The ease of shooting with bolt-action rifles depends greatly upon the amount of force required to pull the trigger. This is characteristic of a match rifle with a heavy trigger pull. The exertion necessary is so great that it causes fatigue, and the muscular contraction tends

to throw or "flip" the rifle off its true aim. Bolt-action triggers come under a separate heading and are classed under "bolt actions." The hammer is replaced by a cocking piece, and the sear is a separate connection, but controlled by the trigger with a pin through the sear in such a location that the end of the trigger has a cam effect upon the sear to release the cocking piece. Some of the arrangements of these mechanisms are excellent, some good, and others worthless.

The design of the Springfield Model 1903 and Mauser is exceptionally fine, and in these rifles it is possible to secure excellent pulls. There is one bad feature in connection with these trigger designs, and that is the "drag" or "creep." Drag or creep is the distance it is necessary to pull the trigger back before the final pressure fires the rifle. Drag is necessary in military arms when used by untrained men in warfare or on the rifle range, but when applied to sporting arms is altogether out of place. You must have instantaneous connection with the trigger when your gun is brought up to the shoulder, for the minute the eye lines the sights and game, the discharge should take place.

A long take-up in any trigger mechanism tends to confuse the control of muscular reaction at the critical moment, and I find most big-game hunters and sportsmen wish this drag eliminated. I usually employ two methods to do this; one is to run a small adjusting screw through the trigger, bearing against the forward end of the guard cut-out; another is to place a small plate in the milled slot on the under side of the guard. Drill two holes with ¼-inch centers and elongate them so that it is possible to make adjustments against the trigger, removing the take-up or drag altogether. By tapping the adjustable plate with a 4 x 48 tap and using a fillister-head screw, this can be made secure and positive, and it is an easy matter to make adjustments. The simplicity of the former method can be easily recognized, but the screw must be tight in the tapped hole or there is a possibility that it may work in the wrong direction, causing the trigger pull to become too light and a premature discharge is likely to occur. The latter method is positive and can soon be installed by the application of such a simple plate.

Further improvement can be made by adjusting the trigger pull. Many Springfield Model 1903 rifles that come from the Armory, as well as others in this class, require such adjustment. The Enfield is one of the most difficult to adjust, but with considerable patience a very fine pull is secured. The Krag is another rifle which is difficult to adjust as it is afflicted with a bad take-up or drag. Besides the drag, there is, as a rule, a certain roughness to these trigger pulls which it pays to eliminate. The beginner will spend much time and effort on both the Krag and Enfield in his endeavors to lighten the pulls, but it will be a great satisfaction when completed.

It is a common belief of the amateur, if the end of the sear is ground away in both the Krag and Enfield, that the engaging distance of both the cocking piece and sear can be reduced to such a degree that a finer pull is possible; but they forget the lost motion between the bolt, cocking piece and sleeve. When ground too far the rifle cannot be cocked, as the cocking-piece notch will not engage the sear. In this case, the sear can be made to project more by grinding off some of the trigger cam. In many of these arms, the bolts can be shaken up and down by the fingers when held by the end of the cocking piece, whether cocked or with the firing pin in its downward position. Under these conditions, it is readily seen that by grinding off either the cocking piece projections or sear very far, it is possible that at times the sear may not firmly catch in the cocking piece and the rifle will be fired before the trigger is touched, owing to the looseness of the bolt mechanism. This may be tested by cocking the rifle, taking hold of the cocking piece and pulling up hard. If the cocking piece can be released from the sear in this manner, the limit of safety has been passed.

I must advise against this practise, for it is possible to secure a fine pull on such arms with the methods outlined for the Springfield and Mauser rifles. It is very easy for the beginner himself to improve the trigger pull on either of these two. Carefully examine Figure 131, which illustrates the

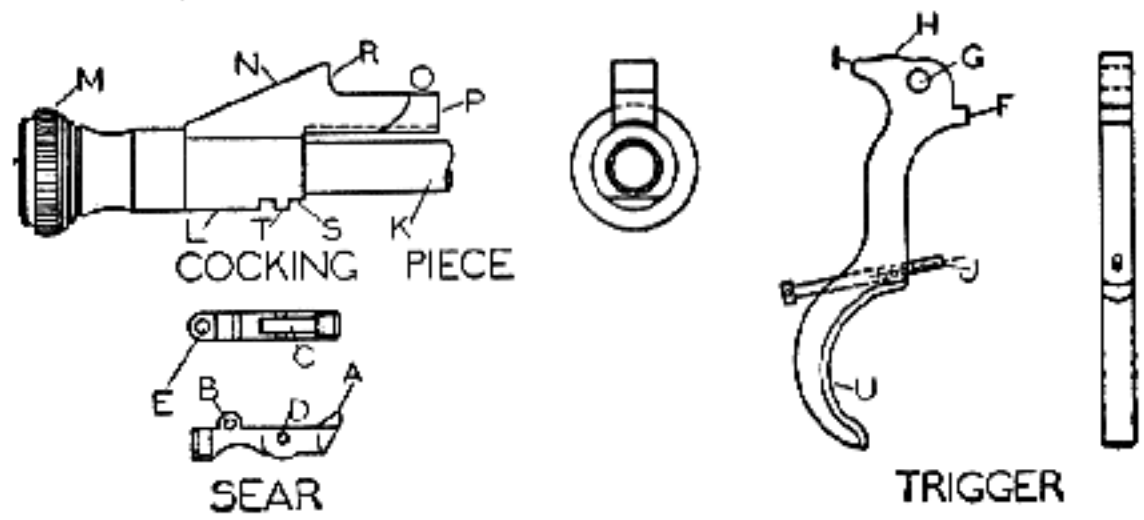

Fig. 131
Firing mechanism of Springfield Model 1903 rifle. Screw-in trigger is inserted to eliminate preliminary pull when rifle is converted to sporting arm

Springfield trigger, sear, and end of cocking piece or firing pin. We have here the trigger, both views; the trigger is hinged in its slot in the sear by the trigger pin through hole *G* and in *D* in the sear. It has a milled finger piece *U* to prevent slipping of the finger, the bearing *H*, trigger-pin hole *G*, heel *I*, and the stop *F*. The sear top and

side views have the sear nose *A*, pin hole *B*, trigger slot *C*, the trigger-pin hole *D*, and sear-spring seat *E*, which is occupied by the sear spring. The pin hole *B* hinges the sear in the receiver. The cocking piece and firing pin consist of the firing-pin rod *K* and the cocking piece *L*, which are made separately, the former being screwed into the latter and riveted in assembling. The length of the rod is so adjusted that when the front end of the cocking piece bears against the interior shoulder of the sleeve, the striking point will project the proper distance beyond the face of the bolt. Other parts are the knob *M*, lug *N*, cocking cam *O*, nose *P*, sear notch *R*, locking shoulder *S*, locking groove *T*. But the essential points are at *R* and at *A* when stoning for the reduction of trigger pull; *J* is the adjusting screw on the trigger to eliminate the drag or take-up, which has been explained.

By removing the rifle from the stock and assembling the guard, it is an easy matter for the student to study the working arrangement of the mechanism between sear and trigger; but between the sear nose and face of the cocking piece, this part cannot be seen; however, you may coat both surfaces of the engaging points with the coppering solution and this will give you the results of travel and effect. A careful examination shows that there are two elements to the drag; first, a horizontal pull, the distance of the travel on *H* which feels as tho one were pulling against a spring, and the second, a rather grating sensation as the trigger movement changes approximately to a downward direction. The first element is caused by the rolling of the rounded projection *H* of the trigger upon the bottom of the receiver, which ends when the trigger comes in contact with the receiver at *I*. The second part of the pull or drag is caused by pulling the sear out of the cocking-piece notch into which it at times has entered too deeply. The grating feeling, drag, or jump must be removed, and when the trigger comes in contact with the receiver at *I*, a gentle constant pressure is required until the sear snaps out of the notch, like the sudden breaking of a clay pipe-stem.

The first operation in reducing the trigger pull, after knowing the complete working forces, is carefully to stone the contact surfaces of the sear nose at *A* and the cocking-piece notch where they come in contact with each other, as Figure 131 shows, between *A* and *R*. The nose of the sear must then be given a slight radius which is true and even across the length of the flat. The side surfaces of the sear and trigger should have a high polish. When doing any of this work, the parts must be held in a vise in such a manner that it is possible to use the oil and Arkansas stones to an unhindered advantage, but the sides of the sear and trigger can be polished on a polishing disc, by using a fine abrasive disc glued to a wooden wheel.

Now assemble the parts and try the pull with the spring tester to see just the amount of reduction obtained in the first attempt. You will no doubt find the pull somewhat reduced, and far smoother when released. You may also find a rather hard pull remaining, with still some creep or catch. This will be removed if you have the sear stoned to a high luster on the engaging face, together with a small radius on the end. Nearly all other alterations of stoning may be done on the cocking-piece notch. Your first attempt of stoning was to get it smooth and square. That being accomplished, you must now begin to stone the notch *R* to a slight angle. This is done by stoning more out of the inside and only allowing the sear to bear upon the lower side. Then, again, you will find the reverse condition prevailing; therefore, it will be necessary to stone some off the lower side. This can only be found by trials.

You may find it advisable to grind off a part of the top of the sear and also the cocking piece so that there will not be much travel, in order to secure the finest trigger pull. This has been discussed concerning the Krag and Enfield, but on the Springfield or Mauser it is possible to obtain the right pull without resorting to such methods. It often happens during your first trials of the pull and after stoning the sear and the notch, that the sear will stick and not return. This happens as soon as you take up the preliminary pull and the trigger will not return to the normal position. Two things may be wrong; either the sear spring is too weak, or the angle on the face of the sear or the cocking piece is too great, allowing them both to ride on an angle. A coat of the coppering solution on the face of the sear and the cocking piece will show this trouble. To eliminate it, a stoning operation is necessary to change the bearing surface, providing the spring is not too weak or broken.

Having obtained experience on the Springfield and Mauser trigger mechanism, you will be able to perform the reduction of trigger pulls on all other arms which have similar mechanical features. On some bolt-action rifles where the sear acts as a bolt stop it is impossible to remove the drag or preliminary pull, as the full travel of the trigger is required in order to remove the bolt. Such a long take-up or drag on hunting arms is incorrect, and they are only made in such a manner to reduce the expense of manufacture.

The Mannlicher mechanism has a roller placed in the end of the sear. I have completed a num-

ber in other arms in this manner by customers' requests. The bearing is only in the center of the roller to reduce the bearing surface and reduce friction to a minimum. It is a very good idea, but when this part is stoned and highly polished on the trigger and also on the contact point of the receiver, the roller is hardly necessary because of the short travel. It would be different if this part would move any perceptible distance; but for the length of travel it has, it is practically stationary at the point of contact.

Set Triggers — Set triggers, or hair triggers as they were first called, are of many kinds, and are found mostly on German and Austrian rifles. Charles Newton introduced set triggers on his rifles, which were very good in many respects. There have been a number of different ideas developed along this line, but it seems as tho the German set trigger will still continue to be the standard. All such triggers now in use can be used as single triggers by merely omitting to set the rear trigger. However, it is difficult to give the clean and quick release that can be obtained with a single trigger, due to the arrangement of the leverage. Of course, one may do a considerable amount of stoning and produce a fair pull. The problem with set triggers lies in the fact that sufficient movement of the front trigger must be permitted to release the rear trigger, which then flies up and strikes the knock-off attached to the sear, thus firing the rifle. The rear trigger then comes to rest at a point considerably higher than it occupied when it was set and held by the bearing on the front trigger. To fire it as a single trigger, the front trigger must be drawn back beyond the point where it released the set trigger and until it bears either against the rear trigger in its higher position or directly upon the knock-off itself. It must come back far enough to press the lever end of the knock-off, raising it sufficiently to release the sear.

Figure 132 shows the full detailed drawing for the German type of set trigger made on the principles just described. The method of accomplishing the purpose of set triggers is to form the two triggers with the upper portions in the form of thin blades which work side by side, each being approximately one-half the thickness of the complete trigger. When used as a single trigger you can see that the straight projection of metal on the trigger is made to give the proper support due to the long

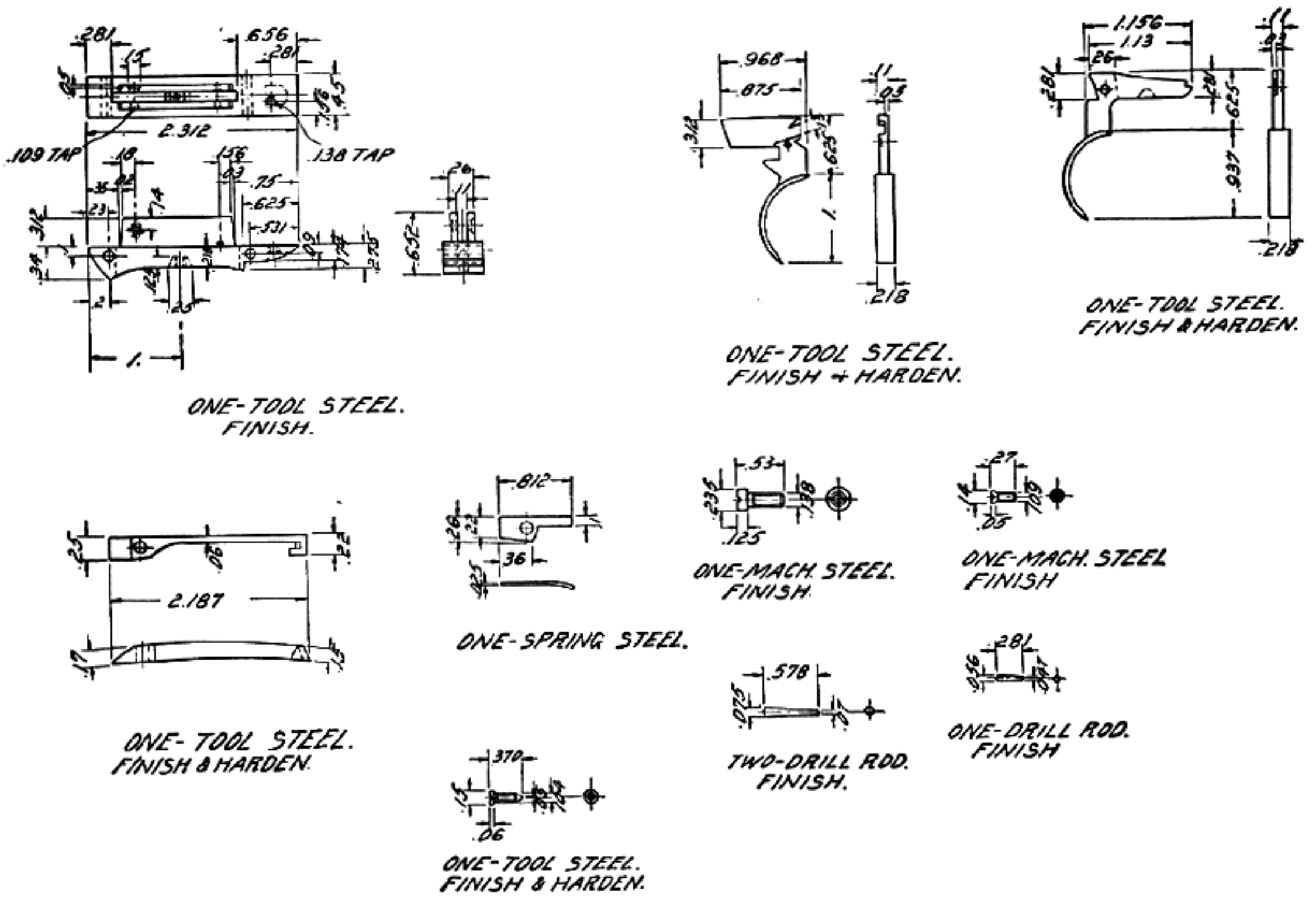

Fig. 132
Set-trigger mechanism as used in the German Mauser Sporting Rifles

leverage, and the result is a hard grating pull. Set triggers have their advantages and disadvantages, for at times they become dangerous if the end of the rear trigger wears down and releases the set unexpectedly. The adjusting screw should be fitted very tightly in the trigger plate so that when it is once adjusted it will stay in place. A loose screw is always a source of annoyance in a set trigger mechanism, and it is much better to make these to stay in position when once set.

There are two points which must have particular attention; they are the springs and the proper temper in the triggers. In the regular German type of set triggers a considerable amount of trouble is encountered in their hardness. They must be hard enough to obviate any wear and at the same time not so brittle that they will break under hard usage. Very little difficulty is encountered with the springs when they come in the standard German set triggers, but when you attempt to make these yourself, careful attention must be paid the temper.

The mechanism of most set triggers differs considerably. In one case the forward trigger is set; when it is necessary to use it, you push the front trigger forward and use the rear as the regular trigger, both triggers facing one another. Then there is the single set trigger in which the one trigger is pushed forward to set it. This is found on some of the Winchester arms. The mechanical features of all these triggers are very similar in construction, and the general directions and descriptions for making, as given in the first part, cover about all that can be learned except by a careful examination. However, it will be noticed that it has a sear at the front trigger. The notch or shoulder is the front trigger; one slides into the other and is engaged as the spring pressure is applied. The disengaging feature is the weight set against the front trigger, which allows the rear trigger to snap back, hitting the knock-off. At times the rear trigger becomes too short, and by annealing this and lightly tapping the full length of the flat portion of trigger, it is possible to stretch the metal to a length which will place it back in the correct position. Harden and temper the trigger as previously directed. It may also be necessary to lighten these, as the adjusting screw will not take care of this part. The usual stoning and polishing of the engaging points is necessary. Generally, the adjusting takes care of the points I have mentioned, and it is the rear trigger which needs only a slight stoning operation.

Shotgun Triggers — These also come under a separate class, because of the mechanical features of the arrangements of the triggers, sears, and tumblers. By changing these into different positions we get greater or lesser pull; but there is no need for going into an explanation, as they are fixed points and we cannot change them; what we are interested in is the trigger pull. Nearly all shotguns are constructed on the same principles, with the long sear, regardless of whether they have box, side-lock action, single, or double triggers.

I will not give long descriptions of the principles of a shotgun-trigger mechanism, but rather discuss the difficulties encountered with these triggers. The first consideration, when picking up a shotgun, is to test for the freedom of the triggers against the sears, to see that there is not too much pressure there. A trigger should have the freedom of at least the thickness of a piece of paper at the engaging point and work down to a pull between 3½ and 4 pounds.

Assuming that snap caps or dummies are in the chambers, it is now possible to test for the trigger pull without any danger of breaking the striker during alterations for the required pull. It has frequently happened that one or the other side of double shotguns or double rifles pulls harder than the other; one side may have a pull of 3 pounds and the other as much as 8 pounds or more. If the triggers are free against the sears, they must be stoned on the engaging point to increase or decrease the pull so that there will be the same weight on both sides. If it should be a box-action lock, it is necessary to disassemble the gun. This means that the stock be completely removed, including all the screws which hold it in place, and also the pins that hold the sears. If it is possible, remove the stock without releasing the hammer. Study their position, and if it is necessary to remove the sears, do so, for they can be put back in place, and the gun cocked by assembling the barrels into the action and setting the forearm in place. Having cocked the gun and released the sears two or three times, you will easily get a direct understanding of how these are released from the tumbler notches. While observing the disengaging of the sears from the tumblers, notice the angles on the end of each, particularly the bearing surface. You will also notice the difference between the one which has the light pull and the opposite with the heavy pull. The one which has the light pull has more radius, and the one which has a heavy pull has a greater angle requiring more force to remove it from the notch.

You will rarely find it necessary to remove the tumblers to stone notches, and if you do, use only a fine Arkansas stone. As these were cut in very shallow, much damage can be done with even a

fine oilstone. After the sears are removed, examine these notches with a magnifying glass, to see if any work is required with the Arkansas stone. If they appear rough and show tool marks, it is necessary to remove them by polishing the surface. If not, leave them in place, as it is usually difficult to reassemble them.

The sears must be stoned on the ends in such a manner that the weight of the pull becomes even on both sides. The angle is usually stoned back so that it is free of the top of the notch in the tumbler; then a slight radius is stoned on the end. This is made so that it has an even bearing in the notch, and the size will more or less govern the pull. Some sears do not require any radius, but instead, an angle, because of the shallow cut-out in the tumbler. Therefore, you must govern your methods of stoning the sears so as to have both triggers release with the same weight.

You will find that it requires a number of assembling and disassembling operations to secure the correct pull. Instead of placing the action back into the stock for every test you make, only assemble the trigger guard. First, cut a piece of small gas pipe of the correct length and place it between the upper tang and trigger guard. The rear screw is tightened against this, securing the same results as tho it were in place in the stock. With this space between there will be no spring to the guard when the triggers are pulled. Place the barrels in the action with the forearm in place and test for the pull. The work you have done makes a vast difference.

Some other changes are made to bring the pull down to the required weight, a pull which will be clean and one that requires a pressure on both triggers of about 4 pounds to release the tumblers. The pull should be without the least suggestion of drag or creep. Practically every cheap shotgun as it comes from the factory needs some adjustments in order to suit your requirements in trigger pull. While all this work is being done it will be well to give the arm a complete polishing of all parts as described in other chapters. The working parts should open and close with freedom and the working of the locks should have a ringing sound similar to a delicate piece of machinery when opened, released, and snapped.

Shotgun Single Triggers — There are so many different single triggers on double shotguns that it is difficult to select a certain one and say it is better than the others. There will come a time when all shotguns and double rifles will be equipped with single triggers, from the standpoint of practicability and various other reasons, such as the design of stocks and length. Shifting from one trigger to the other, changes positions of length; therefore, a stock made to measurement for the forward trigger is too short for the rear trigger; but on a single trigger the length, when once established, is set.

I admire the Lang single trigger because of its simple construction, so I base most of my judgment upon single triggers from the simple mechanical features which are included in the Lang patent. They are not selective as a number of other patents are, but I believe that very few men use this feature, or take advantage of it, even tho it is on their guns. It would seem that a selective single trigger is only a matter of choice, and when considering extra levers to install this feature, they must be put in a position which is accessible, and arranged in such a manner that the slightest touch will shift the position. This should be incorporated in the safety thumb-catch on the tang and arranged in such a manner that one will be independent of the other. When that improvement is made, more people will be in favor of selective single triggers.

The advantages of a single trigger over the ordinary two-trigger mechanism are many; a few of these are: There is more time for firing both barrels; the grip need not be relaxed, which is required on two triggers; gloves may be worn without causing any inconvenience; trigger pulls can be regulated as easily as on double triggers; ordinary intercepting or safety levers are possible.

When a single trigger is built it should have extreme simplicity of its mechanical features and still be heavy enough so there will never be any danger of these coming out of adjustment; at the same time it should act independently of recoil. It would be difficult to pick out any particular single trigger and list the various parts, because there are so many. I have already commented on the simplicity of the Lang trigger. Other makes may be similar, as for instance, the Westley Richards, therefore I shall remain neutral in the matter and allow the gun user to make his own selection. A single trigger is so arranged by mechanical movement that it is possible to change from one position to the other by levers, cams, and springs. The mechanical arrangement allows first one barrel to be fired, and the release of the finger upon the trigger allows the other tumbler or lever to catch. The same amount of pressure releases the other sear and discharges the weapon. On single-trigger arms, the same length sears are used as on double triggers, except for the length of the end projection to engage the lever. Furthermore, the weight of pull can be made to any pressure required without fear of faulty operation or the simultaneous dis-

charge of both barrels. My advice to the beginner is to study these and understand the working principles thoroughly before trying to disassemble them, particularly the more complicated kind. With the simple ones, built on the same principle as the Lang, you can remove all items with freedom, because there are so few working parts.

Speeding Up Lock Time — This question is always in the minds of target shooters, and extensive experimentation has been done these past ten years on this one problem. It is only natural that when the student completes the adjustment on the trigger pull, he desires to speed up the lock time to suit his fancy. The Winchester Model 52 has a very fast short striker, but the Springfield Model 1903 and M I .22 caliber have been more or less neglected, except those on which the lock time has been improved. I have never thought it particularly advisable to speed up lock time, and have only done it when a customer so desired. Nearly all of this work has been applied to single-barrel trap guns, and even that requires the making of all new parts; the same applies to bolt-action rifles.

This operation is done in a number of ways, depending upon the type of action. The principles employed are: shorter hammer or striker fall, heavier and stiffer main springs, lighter hammers or firing pins, removal of weight from hammers by drilling; and on rifles with hammers, changing the location of sear notches in hammers or tumblers.

Flat or V-type springs, when made of the proper spring steel, have a much faster action than coil springs made of piano wire. Naturally the manufacturers tell the public that the helical or compression springs are the most durable, because they seldom or never break; the flat spring is easily broken. Helical or compression springs have replaced the flat spring because they can be manufactured more cheaply. The flat spring steel made in the United States is usually of a poor quality, but if the manufacturers would import the finest of British spring steel and apply the correct heat-treating methods, the flat V-spring would still be supreme in the construction of our American firearms. Of course, now that the designs of shotgun actions are made for coil springs, it is out of the question to substitute a flat spring; so we must be satisfied with the coil springs.

A rifle-action having flat springs and a hammer can often be speeded up by making a much heavier spring; use the old one as a model and apply the correct methods of forging and heat treatment as described in the section on "Spring Making," Chapter XXI, Volume II. The hammer is lightened by removing metal wherever possible, and changing the sear or trigger notch so that it will not have quite so long a fall.

The usual plan of reducing the weight of a hammer is to drill holes in positions so that they will not interfere with its strength. When performing this operation, lay the holes out so that they will be spaced the same distance apart and also be the same distance from the sides. These may either be counterbored or countersunk to improve the appearance. Metal may also be removed by a milling operation, using a small end mill. Always weigh the hammer before the operations and after. Too much care cannot be exercised when doing this work. The hammers are hardened or even case-hardened again, after the work is completed. Case-hardening, as described in Chapter XVI, Volume II, is recommended for these parts.

When filing new sear notches in a hammer to shorten the travel, a thorough examination should be given the hammer and the trigger to see if this can be done. Many hammers cannot be altered because of the close work or limits between the trigger and the hammer notch, and the short distance between the new notch and the old. This must be well figured out before any work is started. Be positive that the parts will not be spoiled; also consider the possibility of securing a new one from the manufacturer. If you are working on an obsolete model you may find it necessary to make a new hammer, and this means a lot of work.

Oftentimes a new spring is quite practical when made extra-heavy and with the proper temper; still, you may be able to stiffen the old spring by the addition of a piece of copper wire, small in diameter, wound around near the bottom. At times one or two coils of small wire are sufficient, and then three or four windings are necessary to bring the spring up to a high tension in order to get a fast hammer throw and still secure the desired efficiency from the spring. Very frequently you will find that in the end a new spring will be the most practical.

When speeding up lock time on single-barrel trap guns it does not pay to try to make the old parts do, such as the springs and tumblers. These parts are usually rather complicated, and it requires time and patience to construct new ones; but the time and efforts are rewarded by better results at the traps. I have speeded up such single-trap guns as the Francotte, Lang, Westley Richards, Daley, Baker, etc., with very satisfactory results; but these arms require new parts and entail much work. If you should have the opportunity to work on the Francotte trap gun, make at least three of the sear springs and two of the main springs to get the desired results. The small sear spring is especially

important, for this sounds the ringing snap when the gun is opened and in the cocked position. When a change is made in the hammer, a new sear is required as well. Always get the engaging section well down instead of short, which makes a better trigger pull on one of these arms. Each and every gun of special construction requires special construction of the new parts in order to get the most rapid lock time.

Speeding-up lock time on bolt-action rifles is done in various ways. There was much of this done on the Springfield Model 1903 rifle after I left the arsenal, together with new set trigger. This information was published in *The American Rifleman.* The international team was supplied with it in 1926, if I am not mistaken.

I have read of advice to cut off the end of the cocking piece on the Springfield rifle to reduce the weight and then round this over on the end. My advice would be to secure a headless cocking piece from the D. C. M.*, for when you once cut the end off it allows the firing-pin rod to unscrew from the cocking piece. This rod is threaded and the cocking piece is tapped to receive it. The pin is then riveted over and will never turn out or strip the threads from constant use. If you find it necessary to cut off the old-style cocking piece with the knob, make a gauge from a piece of sheet metal or set the combination square from the end of the rod to the cocking piece so that you can hold the correct length. Before you rivet over the end, drill a $\frac{3}{64}$-inch hole, insert a piece of drill rod, and rivet this over on each side. Rivet over the end of the pin in the cocking piece; this makes a positive union which will never screw out of the cocking piece.

By grinding back the sear notch and also the face of the sear, a shorter travel is obtained, but too much care cannot be used in doing this, to maintain the original shape on both engaging surfaces. This alteration, together with a special spring made from square spring steel instead of the round music wire that is used, will speed up the lock time greatly. Such springs are rather difficult to make without special tools, but when once made are very efficient, and have more tension than the round spring which comes as a standard on these rifles. Bolt-action arms can be made at least 20 per cent faster in lock time by employing these springs and giving them the proper temper.

Longer rods, together with special strikers, can be made to reduce the distance of the travel. These are made of special alloy steel which has been given the proper heat treatment. The heavier spring steel must also be employed when using these. Remember that the correct projection of the firing pin from the face of the bolt should be 0.065 maximum and 0.055 minimum. If the striker is allowed to project over 0.065 inch from the face of the bolt, it means a number of pierced primers. When lubricating the firing mechanism of any speed-up locks, use the lightest oil possible, such as given in Chapter XXV, and then use it very sparingly.

The problems of trigger pull and lock time are probably among the most vital points of good shooting and the most careful attention should be given to these essential parts of a rifle. The beginner will, no doubt, spend much time and effort in his endeavors to obtain a perfect trigger pull and better lock time. He may, in his attempts, spoil a few parts, but when, finally, perfection is achieved, mingled pride and satisfaction are the reward.

Only one who is a rifleman himself can appreciate the superior feeling gained from knowing that his rifle or shotgun has the proper trigger pull. After that, other arms which are imperfect in this respect will seem foreign and strange in his hands. Next in importance to trigger pulls are sights, and when the combinations are in perfect harmony with each other the student will find, as time goes on, that he has acquired a greater understanding of firearms and can select the perfect rifle for his own individual requirements. Carry out the instructions given in this chapter, and then turn to the question of proper sights, which, together with perfect control of the trigger, will establish your independence in good shooting.

*D. C. M., Director of Civilian Marksmanship.

CHAPTER XXII

Amateur Etching and Engraving

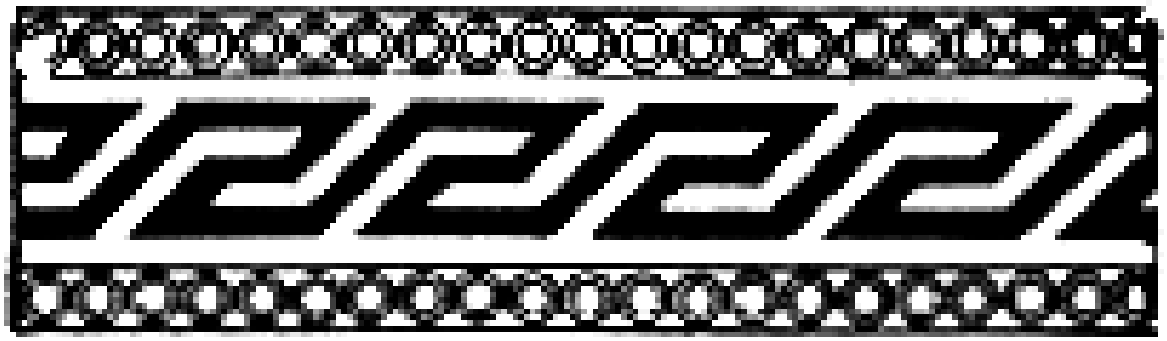

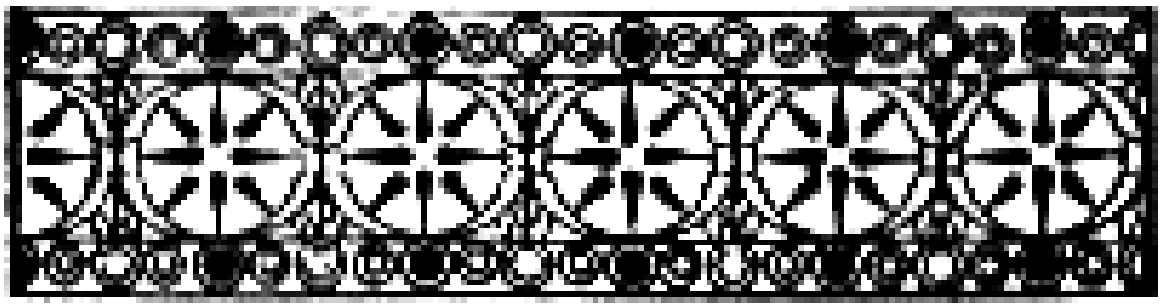

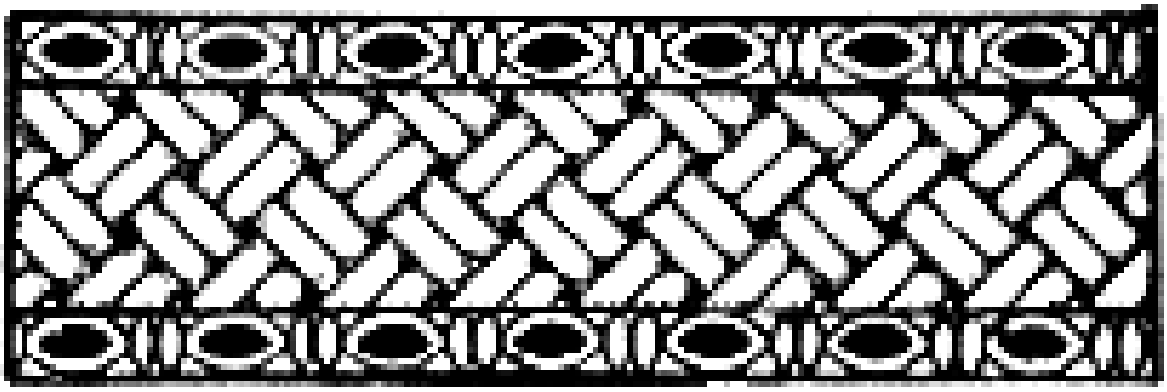

CHAPTER XXII

Amateur Etching and Engraving

A CHAPTER of this nature, to be thorough and accurate, should be written by an experienced etcher, and in my opinion the only ones qualified are those who take it up as an art in connection with Art itself. Steel engravers have mastered it, but they prefer to chisel their designs on the metal. Fine engraving is an art which involves a lifetime of study, but with a little aptness and an eye for detail the amateur can easily master etching.

I remember my early attempts at this fascinating art. We had a man in the gauge department at the Arsenal who was a jewelry engraver, and a very good one, but he used hand gravers, held these tools in the palm of the hand, and worked the metal out around the design, as we would use a scraper, only pushing the tools directly away from him. On most of the work he used a special vise with a round ball which fitted into a holder fastened to the bench and could be moved in any position. After watching him for some time, I made different kinds of gravers and tried his methods, but without much artistic expression. I found a great difference between a jewelry engraver and an engraver of firearms; the latter chips his design out with special chisels, whereas the former eats away his metal. The processes are equally difficult. The jewelry engraver makes a great many etchings, and this the student can do with very little practise.

You will note that I have listed the various etching solutions in Chapter XVI, Vol. II, and some special solutions are given here. When I made up a box with the various cleaning and repair accessories for Colonel Whelen, our engraver made the name plate to be fastened on the top lid with the Colonel's name and camp-fire motto etched in on brass. This showed up so well that from then on my interest centered upon etching, and I still find it simpler than trying to engrave objects on steel with chisels.

It was necessary for me to copy objects on tracing paper and transfer them to the plate frame of revolvers, cylinders, floor plates, guards, etc., whereas the engraver brings his designs out free-hand with needles, scrapers, dry-points, etc. Those with artistic ability will have no trouble making desired sketches on the plain parts of a firearm to make it more attractive.

Tools for Etching — The student can make most of these tools from dental burrs by grinding them to the various shapes required for etching, and then supplying them with wooden handles from ebony, yew, or snakewood. For the needle points you can use ordinary needles, setting them into wooden handles. Sealing wax is melted over the end of the holder and formed by the fingers into a smooth cone halfway up the needle. The round dental burrs, which look like small cherries, can be ground and used as burnishers. Of course, it is necessary to remove all the flutes from the burr and stone the ends to a high polish. Some burnishers are perfectly round, others have only a half-round section, and some have two flat sides and a rounded point. Two of these can be set in one handle the same as the needles. It will also be necessary to make blunt points small in size for wider lines. When you are continually placing needles in acid, the points are soon eaten away, and the needles in time can be used for blunt points. These also lose their acute angle when sharpened, and a very obtuse-angled needle means a very broad line unless the point is kept sharp. A good holder is that made by the L. S. Starret Co. as a scriber holder. It consists of a screw holder and loose steel points which are reversible when not in use. The scriber points are too long for drawing lines, but these can be ground down and made shorter, or special ones can be made. Victrola needles can be utilized and made to fit this scriber handle. These grips are excellent for dry-point.

Whether it is broad or fine, an etching needle should be blunt and perfectly round so that, when removing the varnish or wax, the hand may move in any direction without the point catching in the metal. After sharpening one of these needles on a stone, the best way to insure a smooth rounded point is to take hold of the needle on the holder and scribe circles with it on a fine hard Arkansas stone and then on some polished steel surface, making the circumferences of the circles as wide as possible, and gradually diminishing them (by raising the hand) until the needle is in a vertical position and the circles are very small. This operation wears off the irregular face of the sharpened point of steel, and any degree of bluntness without

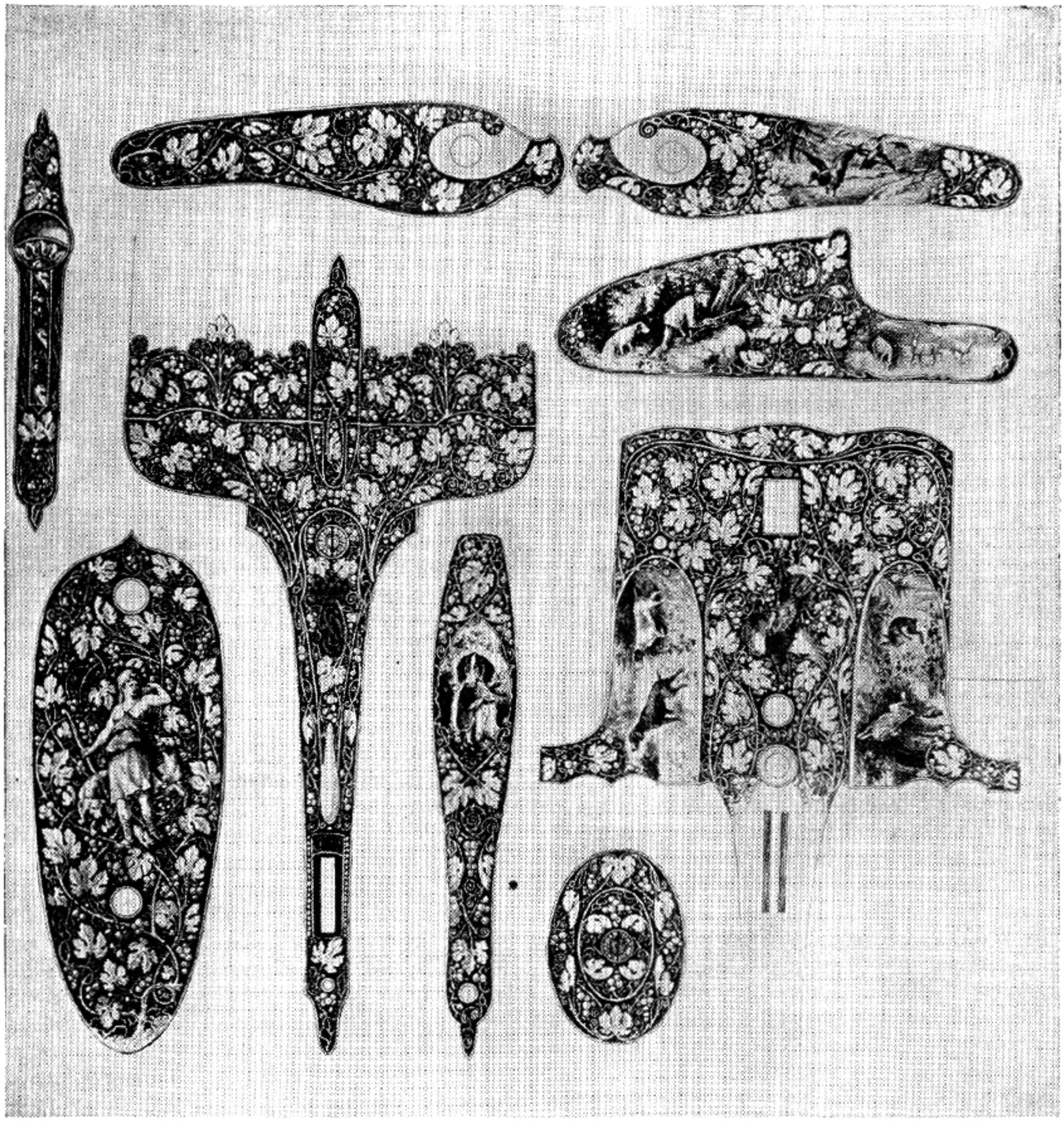

Fig. 133
Beautiful examples of the steel engraver's art. Many parts may be etched

angles may be obtained. With these, dry-point, and any degree of light or heavy lines can be made through the varnish.

Sharp-pointed needles made from dental burrs must be so constructed that the chief value lies in their extraordinary freedom in scribing lines on steel. They should not be employed on hardened steel such as revolvers, automatic pistols, floor plates, guards, barrels, etc. They will be found invaluable, as they can move into the steel through the varnish as easily as the dry-point. The needles produce very fine cross-checkered lines through the varnish which look far better than a matted surface. This process is so laborious that you will probably not want to attempt it; however, it can be done with a matting tool having very fine teeth, as illustrated in Figure 139, or with a contrivance that dress-makers use, having a handle and a round roller with a number of pointed teeth.

It would be an easy matter for the student to buy a jeweler's knurl with fine serrated teeth, and set this into a handle so that it could be rolled

over the surface. This produces a pleasing effect. The scraped-out surface around the design looks very well, but the straight fine lines between the designs improve the work greatly. If you can summon the courage or command the staying power to carry it through, matting done with the acid is beautiful. In principle it should yield a series of finely dotted lines, and at the same time form a solid black between the lines of the design. Remember, however, that this requires patience and long hours of labor.

Scraper — This can be made from a three-square needle file. Break the file off about 1½ inches from the handle in the file section and grind to a three-sided stiletto, each face being a cutting edge down to the point. When grinding, be careful not to draw the temper by turning the point. When completely ground, the temper must be drawn to a dark straw color. Cut off part of the handle and set into an ebony handle. A good oilstone is required to keep this sharp, and each face must be held flat on the stone while rubbing. A long cork should be used to protect the tip of the tool, with a suspicion of oil to prevent rusting when not in use. The scraper is used to pare off the surface of varnish between the designs and where corrections are to be made; also to scrape and remove sections between designs or "burrs" when needles have thrown them up.

You will also find a flat scraper necessary, made from a thin flat needle file in the same length as the three-sided scraper. This must also be ground and the temper drawn to a dark straw, set into a handle, and stoned to a sharp cutting edge on the end. This scraper is used to push the varnish away on the larger surfaces and to scrape the metal on parts where a wavy appearance is desired. The action of the hand in scraping is as follows: one side of the three-sided tool is placed flat upon the steel surface and then tilted just enough to shave off the metal when moving forward with a slight downward pull. It is gripped between the first and second fingers and thumb; the hand slides on the

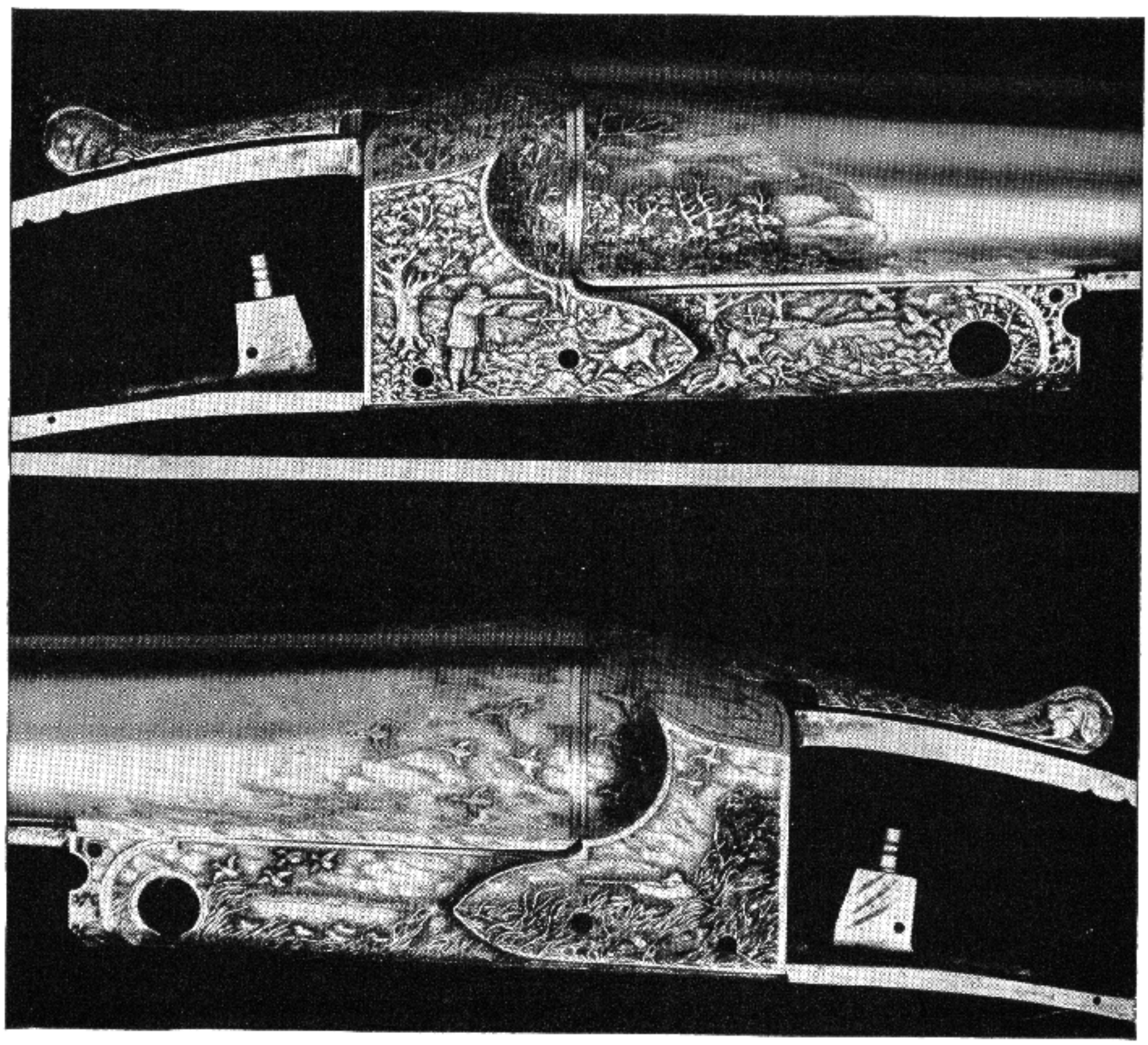

Fig. 134
Relief engraving showing cloud effect in background. This effect can also be scraped out and acid used to deepen the appearance. A very striking design for a shotgun

nail of the little finger. This enables the angle of the hand, and consequently the angle of the scraper, to be kept absolutely constant. All direction should be controlled from the elbow. The flat scraper naturally may be used in both directions. Where much scraping is to be done, the three-sided scraper can be held in the manner described, with a scraping motion toward you. Figure 134 shows what can be done with a scraper.

Burnishers — The burnisher is merely a highly polished flat or round tool used to remove roughness and scratches. The tools made from dental burrs are very satisfactory. You can make different shaped instruments from these and the half-round needle files which are set into ebony handles. The half-round burnishers may be used successfully on rounded surfaces such as barrels on rifles or shotguns, revolver frames and guards, etc.

Graver — The burin or graver is properly the line-engraver's instrument, but a very useful tho not essential tool for the student to use in etching. By its aid a line or two may be added here and there without the necessity of regrinding and rebiting. The quality of this line combines far better with that of etching than that produced by the dry-point, and is besides, more durable, as the graver does not merely displace the metal in its passage, but removes it completely. By no means will every etching job on a firearm require its use, but as a reserve tool you will find it very valuable.

All these instruments should be protected from rust; no parts should be left exposed to the action of acid. All points should be protected with cork tips, and a certain amount of sperm oil should be allowed to soak into the cork. Before using them, all traces of oil must be removed or the acid will not take effect. Figure 135 illustrates all of these tools, which were made as described; they are some of the easiest tools for the student to construct.

Acids or Mordants — Nitric acid is the most commonly used for steel, and Formula No. 28 in Chapter XVI, Vol. II, may be used successfully on soft parts of metal surfaces; on hardened parts the formulas differ. To give full details of etching, it will be necessary to go into the subject very thoroughly and give complete instructions, so I shall incorporate different formulas as I go along, using various acids to do the biting-in.

I use nitric acid with an equal quantity of water (equal volume—not weight), but you may prefer a weaker or stronger bath, such as 1 part acid to 3 parts water, or 1 part acid to 5 parts water. In preparing the acid mixture, *the water should not be poured into the acid,* as the heat generated may conceivably crack the bottle. The water should be first measured and poured into the bottle, then the acid added. The cork or stopper should never be placed in the bottle until the mixture has had time to cool, nor should it be used until cold. It is well to hold in reserve some of the raw acid for extra-strong biting at the end of the work. The mixture may be a little too rapid in its attack until some filings have been added, or better still, a small ball of steel wool the size of a navy bean. After the first mixture, some of the exhausted acid can always be mixed with the new, sufficient to color it a pale brown.

On hardened receivers you will find it necessary to use two parts hydrochloric and one part of acetic acid. It will be wise to experiment on the under side of the receiver first to see just what the action of the acid will be. Formula No. 29 may not give the required results, therefore it will be necessary to use Formula No. 30, Chapter XVI, Vol. II. Still, I have used one part nitric to two parts water, and trials on the under side will determine results.

Another acid which is invaluable, not only mixed as in Formula No. 29 (glacial used in this formula), and the use of which you can not find in textbooks, is acetic acid. The ordinary commercial acid is best, and not "glacial," which is too strong and used undiluted. The B. P. acetic acid (commercial) is about 30 per cent in strength. Its function is to remove impurities, particularly those which have been deposited by moist hands in drawing on the steel part of the gun and may have collected in the lines, forming temporary "acid-resist" and thus causing fatal irregularity in the lines. This cleansing of the lines and flat spots from perspiration salts, etc., is particularly necessary when a gun has been worked upon for several days, as without the action of the acetic acid the most recently drawn parts are almost certain to begin biting before those passages drawn earlier. This is especially fatal where fine checkered or straight fine lines are drawn at the close of the work; in this case these last lines will jump ahead of the rest of the work of which they are a part. Even when there has been no perspiration from the hands, slight oxidation from the atmosphere is sufficient to make a difference. The action of the acetic brightens up all the lines and spaces as if they had just been drawn, and permits the mordant to reach them all immediately, and what is more important, simultaneously.

Good cider vinegar proves an efficient substitute, especially if a little common salt is added. I discovered this while trying to make the acid

Fig. 135
Essential tools and equipment for the amateur: suggested scroll designs

bite better by adding salt to the acid when it failed to take effect after applying it over the etching. Then I conceived the idea that if vinegar and salt were mixed together it might prove more effective. This, however, did not prove satisfactory; but during the experiment I spilled some into the part where no acid had been applied. After washing this off with water, I tried the acid at that point and good results were obtained. Acetic acid, when procurable, however, gives the best results.

Bottles — The best receptacles for acids are French laboratory bottles, or bottles with glass stoppers. It is difficult to obtain the former in this country, but the latter with the large glass stoppers are perfectly satisfactory.

A glass rod should be used when only a small amount is required on a small surface, but when you immerse the work and pour the acid in lead or hard rubber dishes or trays, the wide-top bottles are best.

I have only touched upon the question of labeling bottles "Poison" in Chapter XVI, Volume II, but further warnings cannot be insisted upon too strongly and may as well be mentioned here.

1. Label all bottles legibly.
2. Keep acids and other poisons out of the reach of children.

Whatever the shape, all acid bottles should be provided with glass stoppers. Only white glass bottles should be used to contain etching solutions. Blue or brown glass bottles are a nuisance for keeping mixed mordants, as it is necessary to see the color of the acid in order to judge its strength. The

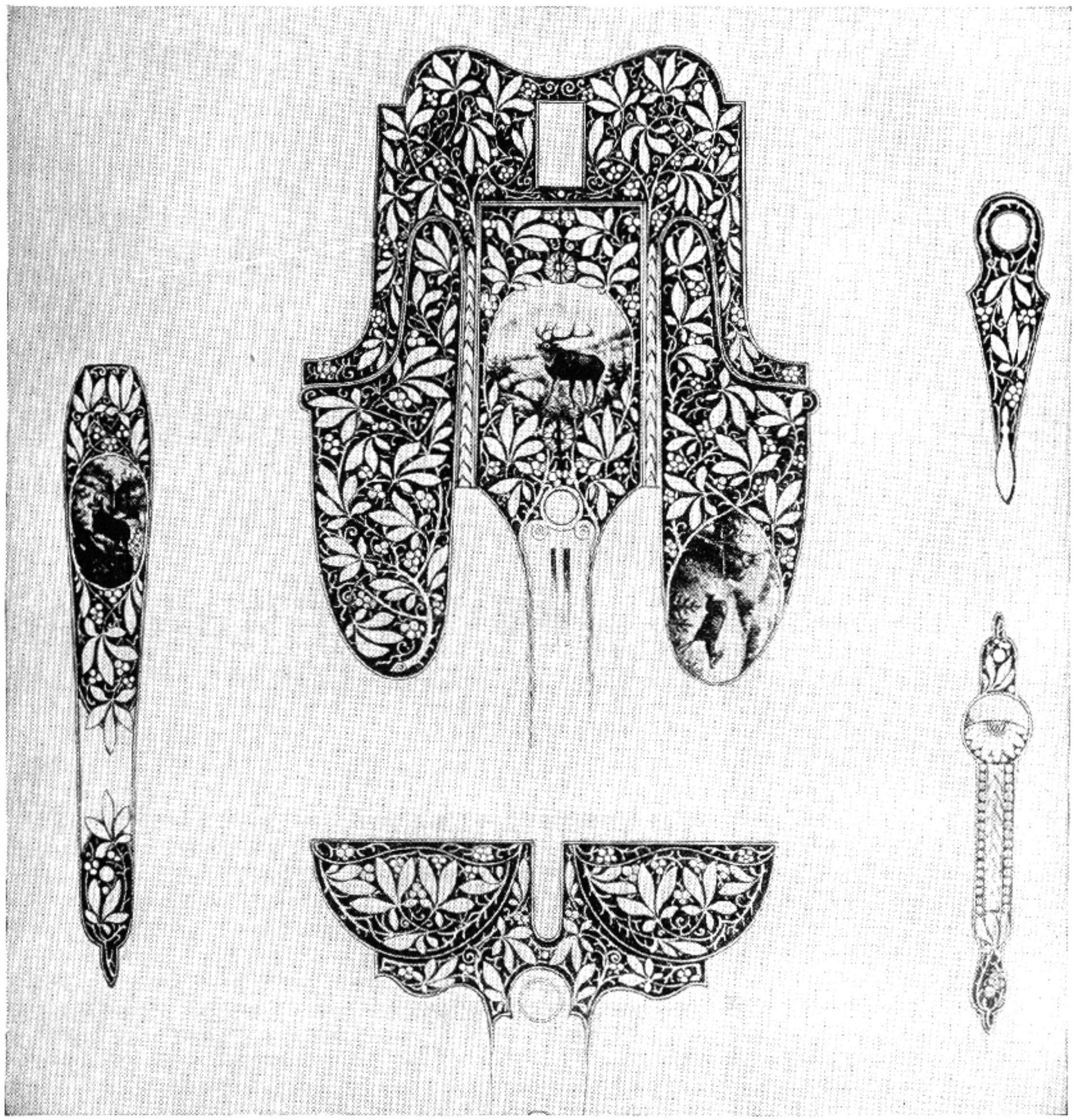

Fig. 136
Leaf effect. This design, when etched in steel artistically, gives a very pleasing appearance

more steel the acid takes up, the darker the color becomes, and if too much is used, the biting force of the acid will be nearly exhausted, resulting in underbitten lines if the biting has been gauged by time. Most of it should be thrown away, keeping a little, as before mentioned, for taking the edge off the new acid.

The more concentrated the acid, the more quickly it attacks (and exhausts itself). Pure nitric, when placed on metal, will boil furiously for a moment; a brown salt is then formed, and the action entirely ceases; the same amount of acid mixed with an equal bulk of water will continue biting steadily for a reasonably long time. Therefore, the weaker the acid, the cleaner, smoother-sided line will it bite; accordingly, the stronger the acid, the coarser, rougher-edged line will result.

Trays or Troughs — During the biting process, when a receiver, barrel or revolver is etched, receptacles large enough to hold such parts are required. For this purpose any kind of dish will serve with a glazed or varnished surface which is unaffected by acids. It is quite possible to make these in the workshop with the wood protected by a great many coats of varnish, melted beeswax being first run into the joints. It will be well to make one for barrels, one for receivers, guards, and one for revolvers and automatic pistols. The most suitable trays are those used by photographers, of porcelain or papier-maché; the latter being light but less durable.

In order to place the work in the trays, two wires should be made so that they will fit over the sides when the work is lowered into the bath. String or twine should never be used, as this is risky and messy. The twine becomes rotten in time and may snap, and if it does, everything metallic near the bath will become rusted or tarnished if it is polished steel.

Ammonia — It is well to have a bottle of liquid ammonia handy for application to any spots of acid. Next to a strong alkali-like ammonia, water is the best thing to counteract the effect of acid. If the hands begin to tickle violently, they should be dipped into water; but for clothes, an alkali is necessary to neutralize the acid instantly. Rubber gloves should be worn, as nitric acid roughens and yellows the skin; unless rubber gloves or finger-stalls are used, this must be put up with, and no genuine enthusiast ever minds such trifles. Fumes from the hydrochloric and chloric acids are nothing as compared with those from a strong nitric bath, where a large area of metal is exposed; the effects of these gases is very often noticeable even at a distance from the bath. In order to stop the acid's action in biting, either plunge the part into water (warm water is much better than cold, as it keeps the ground from becoming brittle), or dry it with blotting paper with a little ammonia added, and rinse it under the warm water. If the part is not washed, the stopping-out varnish will refuse to stick to the ground properly. There is also a slight danger of continued action in the lines.

Stopping-out Varnishes — These are used for protecting the steel parts of firearms before placing them in the acid bath. When I first began to experiment with etching designs on steel or gun parts, I used beeswax placed in a linen or silk cloth, heating the parts up to a point where the wax would run freely over them. Then I let the steel cool completely before any design was etched in. In time I found this to be an unsatisfactory method. I then began to try different varnishes, and obtained some information from my friend, the engraver in the gauge department. He told me of a straw-hat polish or varnish which was often used, but I could not obtain it. This, I understand, is one of the best preparations to use for stopping-out. It is used also for painting over lines which have not been sufficiently bitten. A liquid in the form of a varnish should be used with a brush. I would not suggest buying any varnish on the market, for most of it takes too long to dry and is generally too thick and unmanageable. A very good color varnish which can be mixed as a stopping-out varnish is made as follows:

4 oz. shellac, white
8 oz. pure grain alcohol
45 gr. methyl—violet dye

Allow the alcohol to dissolve the shellac completely, and then add the dye. This produces a very good color to work over or to cut out designs.

The following is equally good:

1 part bitumen (asphaltum)
5 parts benzol

This varnish may be painted on the firearm with a pointed camel-hair brush. Usually the border is painted around the design; then all the remaining portions of the steel are exposed to be etched out. Naturally, the more accurate the design the better it will appear when finished. Veins of leaves are the best for the student to paint in, or different scroll designs, which are much easier to paint than leaves. Of course, by this method you can do a fair job of etching, but far better results may be obtained by the proper application of the designs, as they should be worked out with the instruments I have described.

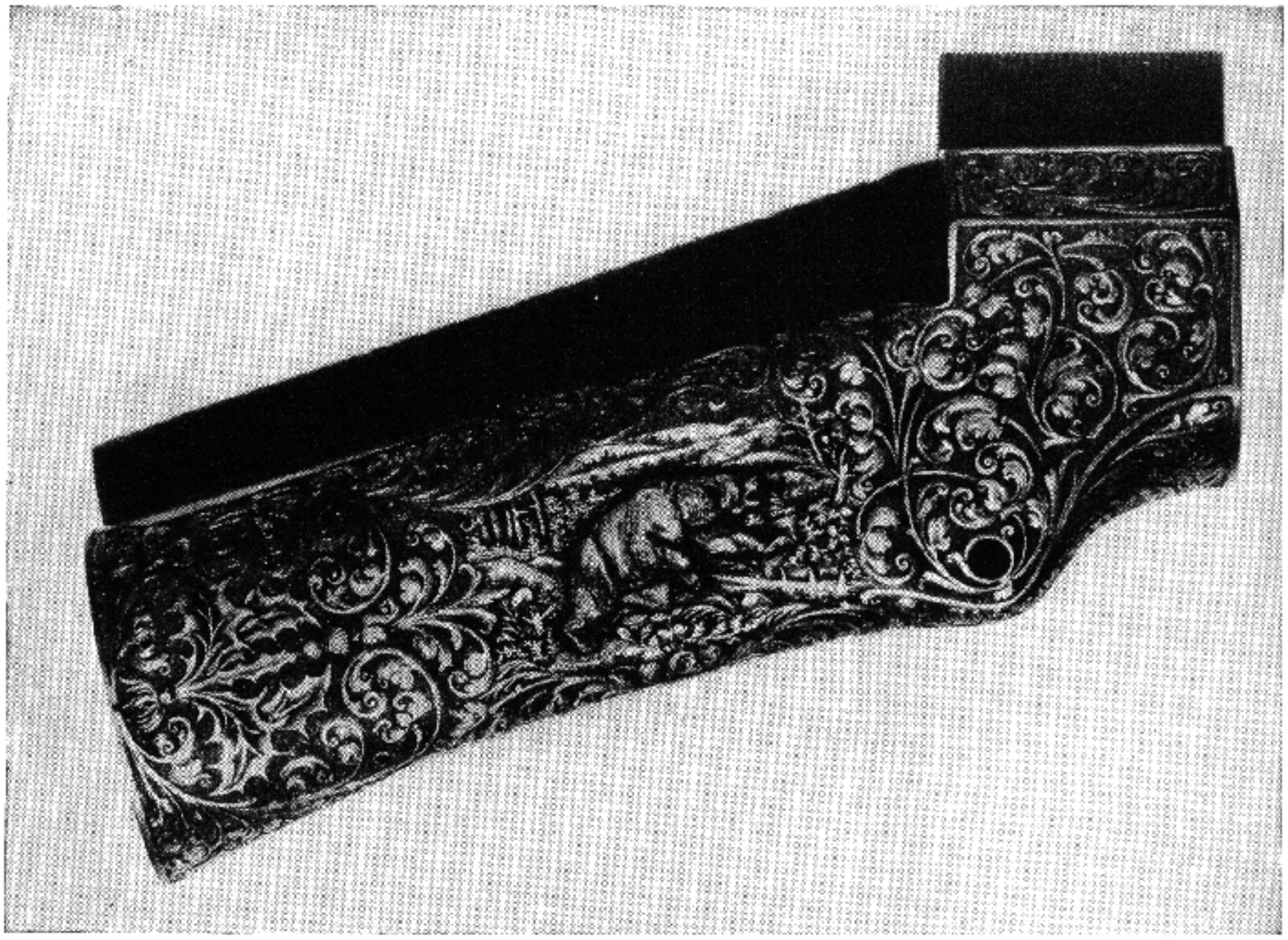

Fig. 137
Ballard action engraved in high relief. The scroll design can be used for etching

The steel must be polished and free from any grease or oil before the stopping-out varnish is applied. All parts should be disassembled from a firearm and completely painted with the varnish. For example, on a hardened Springfield receiver, small wooden plugs must be made for the front and rear guard screw-threaded holes and the part completely painted with the varnish inside and out. The process is the same on revolvers; both ends of the barrel must be tightly plugged, and also the cylinders. A barrel must also be plugged on each end and the parts entirely covered with the varnish. When the process of etching is completed and the acid washed off, immerse the parts in boiling water or alcohol, and the varnish will be completely removed. After this is done, the design stands out clearly.

A great many firearms may be etched successfully by the student to relieve the original plain appearance. When I say a great many arms, I mean almost all the military models, such as the Springfield, Enfield, Krag, as well as factory arms. These arms are good subjects to work on, and needless to say a great improvement may be achieved by many amateurs. I begin my own work by using tracing paper and then transferring the design to the steel. It is remarkable how accurately these designs will come out. Of course this is a simple method compared with those used in the work of an artist such as Rudolph Kornbrath; but then we pass into another class which requires years of experience and is beyond my ability. I would advise the beginner to attempt only the simple designs which I shall describe.

Screw Heads — File some simple design on screw heads rather than leave them plain, especially the screws which secure the pistol-grip cap and also the butt plate, as illustrated in Figure 138. This is only a way of relieving the plain appearance of the heads, but it shows that some forethought has been used. Naturally, the designs on all the heads should conform with each other. I advocate this on all screws which show in bold relief, such as the guard screws, forearm screws, and on revolvers where the heads show, such as the side plates, etc. File the lines very shallow on these heads, for lines that are too deep not only look bad, but accumulate dirt and oil in the cuts. The only file used is a double knife-edge needle file. Catch the screw between the lead vise jaws, and place the fine lines across the face. If you should have a lathe, fine circles may be cut and then the lines can be worked up to these. A very neat design is the checkered head. It requires a little patience to keep the lines even and straight, but you will find that with a little practise this can easily be accomplished. The fine straight lines

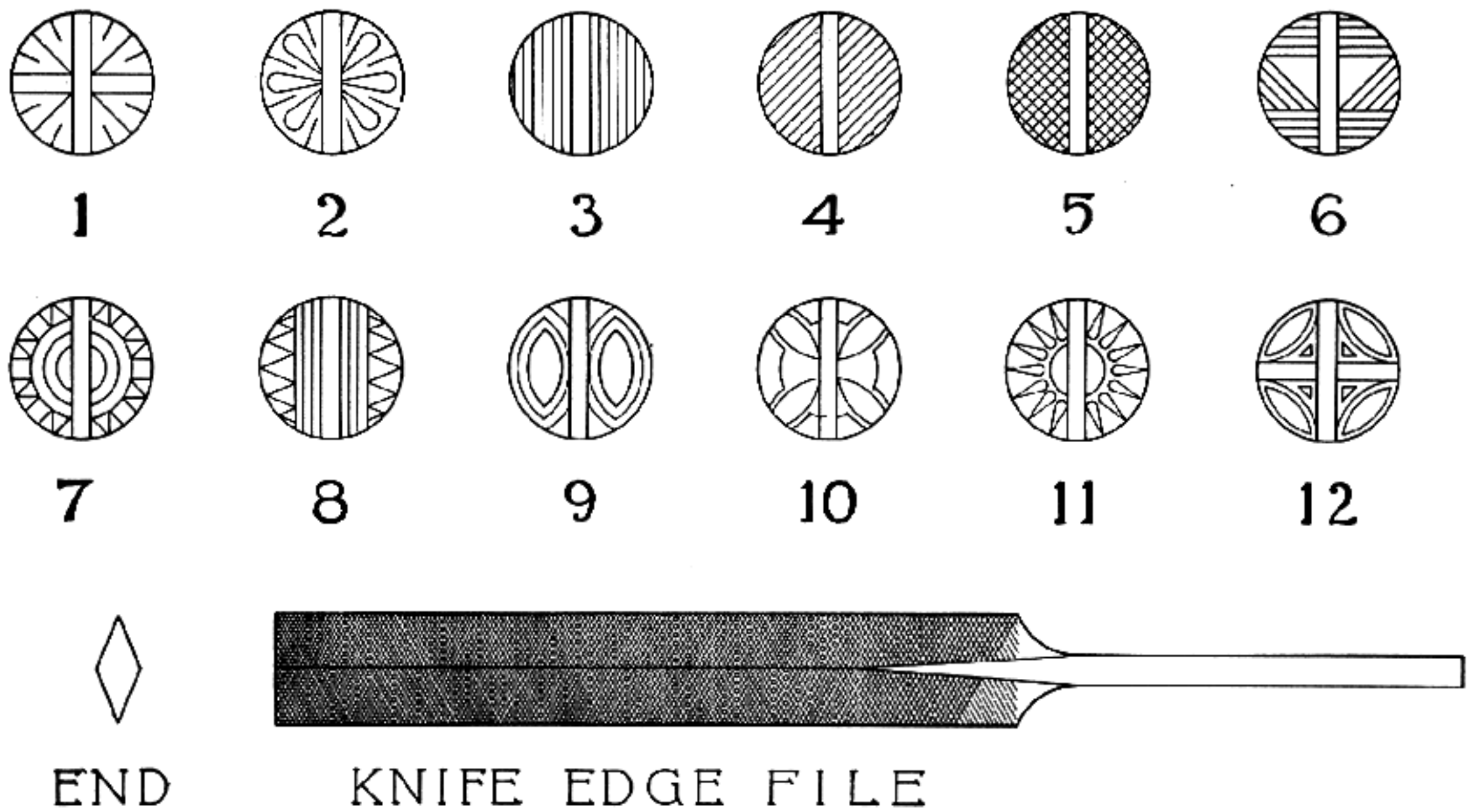

Fig. 138
Ornamental screw heads. Most designs can be made with the knife-edge file, and others with an engraving tool

also require patience. As all screws are set in north and south, lines must be designed which will not conflict with the slot; it will be seen how easily darker or deeper lines can offset the delicate finer lines used in the design. A small O in the stencil set may be brought into use; it makes a pleasing design, as does also an M, L, or W. These stencils in the $\frac{1}{16}$-inch diameter may be used, altho they may look incongruous when reversed. In no way, by using these letters reversed or connecting, does this affect the judgment of the real amateur; it forms a contrast to a set rule by applying something original.

The Use of Matting Tools, Etc. — Matted surfaces were used in Chapter XIII in carrying out certain border designs, following the checkering, and using a matted surface in place of checkering. Now we shall continue with the matted surface on parts of steel, mostly where the line of sights extends, as on forward and rear of receiver, rear sight base, sight leaves, ramp, etc. Making all these

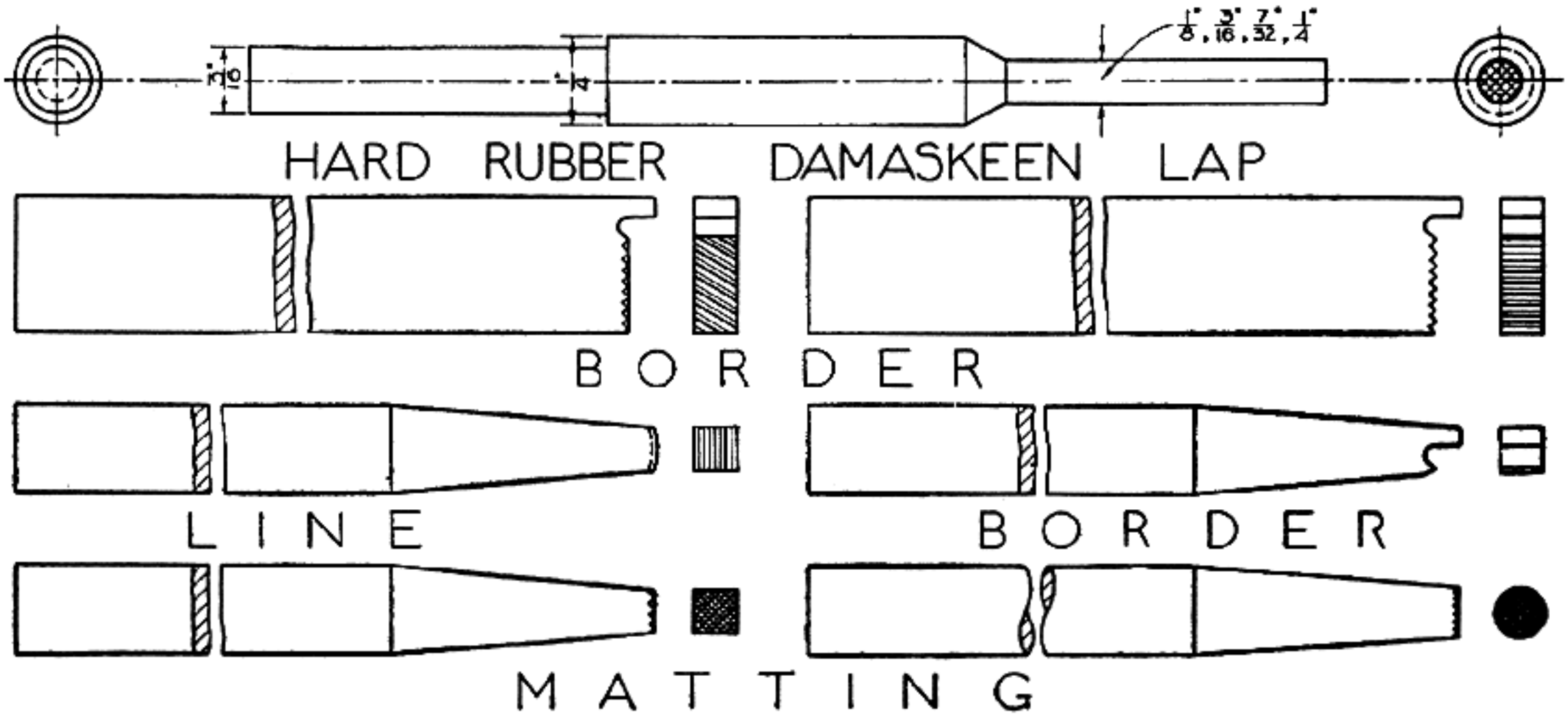

Fig. 139
Matting tools. Damaskeen lap for frosted effect. On steel or other metals

tools is only a matter of forging the ends and filing them up. Figure 139 illustrates the different tools required. Matting tools are more frequently used than any other, and it is surprizing to see what a pleasing effect they produce, particularly on a ramp's incline. On a matted surface a border is essential, for carrying matting out to the edge ruins all artistic effect. This particular form of decoration may be done with a center punch, dental burr, or fine prick-punch, if you have the patience to carry a certain given proportion over such a surface. Matting is only a series of delicate points in which the surface of the steel is covered across and across in many directions until the surface of the steel becomes cut up all over and a dull appearance is produced with a minutely dotted surface. Whether this is done by a prick-punch, dental burr, or matting tool, or as a whole or piecemeal as the work progresses, the principle remains the same; good work can be done in all three ways, but a standard matting tool gives the finest results. The finer the lines in the tool, the finer the matted surface will be.

Take, for example, the front-sight ramp, which must have a matted surface to dull the surface of the incline base and obviate the glare reflected on the sight if there should be a highly polished blued surface. If you did not intend to matt this part, it would have been much better to construct some other form of sight base than the long ramp. Those without fine checkering are out of place, and the eye tells you that there is something greatly lacking even tho your brain does not register the difference. First, take the border tool; if you have already completed this, it gives a line inside the edge of $\frac{1}{16}$ inch. Rest the side against the outer edge, gently tap the tool with a light hammer, and each time you make a tap, move the tool about the width of the impression made. Continue thus on both sides until you have a sharp and well defined line from top to bottom. Now, bring the fine matting tool into use. By holding this between the thumb and index finger of the left hand and resting the nail of the little finger on the metal, or on a convenient section of the barrel, raise the tool off the metal about $\frac{1}{4}$ inch and give the matting tool light, sharp, repeated blows. The short distance the tool is held away from the work, with the spring of the little finger, causes an effect similar to that of an air or pneumatic hammer. Never hold the tool in one spot, but keep moving in a new location each time a light blow is struck until the surface is well darkened between the borders.

This, at least, is the orthodox method of doing such work. Some men, no doubt, will avoid part of the labor by employing a center punch (which can be used) and only roughening the surface with a number of marks some of which are deep and some shallow. To begin right in those areas where matting should be necessary, you will be working from dark to light, instead of from light to dark. In other words, you can make the surface look ten times worse than the metal did when it was plain.

When matting the top of a receiver, it is necessary to have a width of matting between $\frac{1}{2}$ and $\frac{3}{4}$ inch on the forward part next to the barrel. A border must be set around this in order to make a completely matted appearance. There are three methods of doing this; one with a bent knife-edge file, the other with a graver or a sharp diamond-point engraver's chisel. It will be best for the student to bend up a knife-edge file rather than try a graver or an engraver's chisel. The bridge or rear part of the receiver is done in the same manner, except that the matted surface is very narrow.

Whenever it is possible to use the border tool on sight bases, ribs, etc., it offers a positive means of constructing a straight, even line the full length of a given distance, and the work can be done much better than by any other means. When a checkered or matted surface is worked in between, the design balances and has the appearance of a well finished job. All steel will take an impression and have the dark color, provided your tools are made fine and sharp and you move over the surface of the steel in various directions, and turn at the same time each blow is hit by the hammer; also if your blows are all given the same pressure, which should not vary over a quarter of a pound.

The wider tools are made for shotgun ribs. These have a side rest and a space which will clear the border. The width can be made to suit the rib, and the lines 30 degrees or straight across. When making the 30-degree tools it is necessary to make two; one right and one a left hand. With two tools it is possible to construct a very fine checkering job the full length of the rib or on any other form of sight base. You can also make one with the lines straight across, as illustrated in Figure 139. It will benefit you to make the complete set, for you never know when you will have occasion to use any one of them. These straight tools give a peculiar beauty to the steel, yielding a wonderful velvety richness in the design, provided they are cut very fine. When you examine such a surface under the magnifying glass you will find a burr and a groove, the burr being the ridge thrown up by the passage of the tool over the steel. Shotgun ribs must be perfectly straight across to do this kind of work, and it must be done before they are set on the barrel. If an upper rib is being considered, this

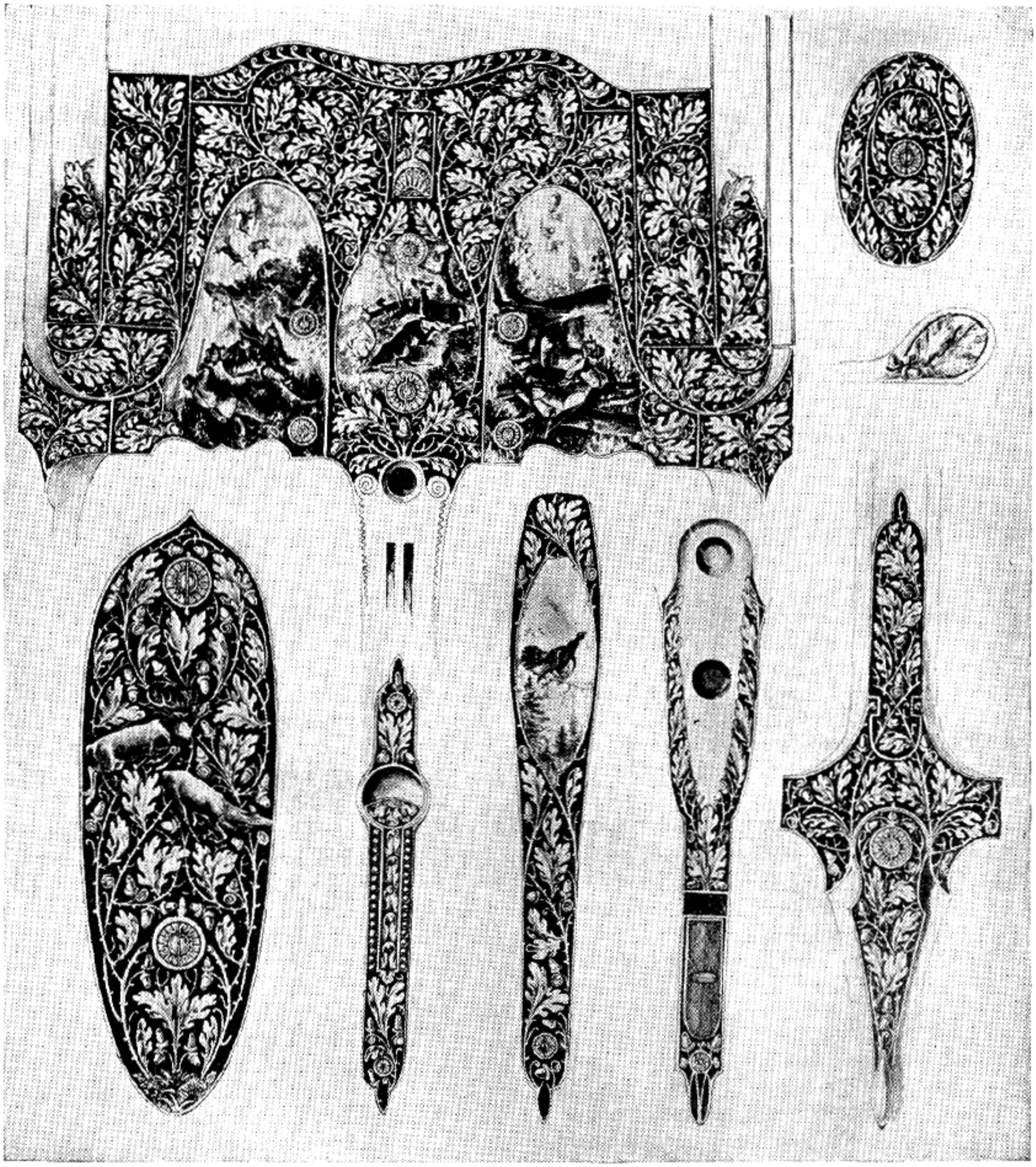

Fig. 140
Fine examples of etching or engraving to work from

may be done off the barrels. When you place such a surface on a rib it springs and curls up, owing to the stretch of the metal. It is then necessary to straighten this; this method will be described in Chapter XXV, Vol. II.

The student will find a great variety of work to be done with all these tools described, not only on parts of guns, but for decorative purposes on any metal surface. All these described applications of the tools may be used by the art student on many subjects, particularly the matting tools. The student may find greater use for this in his particular line, especially the worker in copper, gold, silver, or steel.

Damaskeening — The high circular polished rings we often see on frames and wheels of fine watches are called "Damaskeen," which means the

inlay of metals. This finish has the appearance of such an effect when carried out in a direct or circular line, each and every ring joining one another. It is produced with a hard rubber circular lap made as Figure 139 shows. Hard fiber can also be used, but hard rubber gives superior results. A drill press is required for this operation and is run at medium speed. Flour or optical emery mixed with olive oil to a paste is used as an abrasive. If you are working on a flat surface, a light film of this is spread upon the surface, and the work is set against a stop so that it is possible to keep a straight line and also have each circle connect with the next. On the following line, the stop is moved over just so the circle fills up the space between the place where the two connect. By not wiping the film of heavy paste from the surface, it is an easy matter to set the lap between these and carry out perfectly straight and connecting circles the full length of the surface. Each time the work is moved, the handle of the drill press is raised and brought down. Very little pressure on the handle is required to produce a fine, finished circle. Too much pressure wears the face of the lap too fast, the outer edge becomes rounded, and the complete circle of the lap is not reproduced upon the flat surface. Small parts should be held in a vise and a stop set in a convenient place so that it will move with freedom. Different-sized laps should be used, varying with the size of the work; a small lap for small parts and a large one for larger work.

A polished bolt requires such a finish because it relieves the plain appearance of the polished surface and gives the metal a frosted effect. When applying this finish to such a part, cover the surface with the fine emery paste and hold the bolt in both hands, moving it in various directions against the face of the lap, lengthwise, a motion which will secure a better appearance of the finish. Around the handle and knob, different effects can be produced. When considerable care and patience is shown, a part comes out with a beautiful finish. The magazine follower or platform can be given round connecting circles so that the two parts will match.

Objections are sometimes raised to any polished surface on a firearm, based on the idea that the bright surface reflects light which can be detected by an animal at a great distance. For the man who only uses a rifle one or two weeks in the year and only in our deer country, this finish is not objectionable. But if the arm is going into Africa, it will be advisable to have the bolt blued. Many men are under the impression that this frosted appearance will show up when a part is blued, but it will not, for bluing removes this effect completely.

The inside working parts of all shotguns should be given this appearance. It not only looks beautiful, but it is an effect which has more or less of a rust-resisting quality, due to the action of the abrasive and oil on the steel and the subsequent polish. Observe the difference upon disassembling a shotgun when some of the parts are damaskeened and some plainly polished. Those parts which did not have the finish are rather rusted in spots, whereas, the parts with the frosted effect are free from any suggestion of rust.

Engraved Receivers — There are many receivers which must be completely annealed before any engraving can be done, such as on the Krag, Springfield with numbers below 800,000, Enfield, shotgun actions, etc. The Mauser and the new Springfield actions have only a very light case-hardening on the surface, and it is easy to work under this scale without annealing. When engraving is to be done on a hardened action, it should be completely annealed, then engraved and re-pack-hardened. If you are not equipped to carry out such work, it is better to send the action to a firm well equipped to do it. Of course, elaborate and precise engraving is beyond the ability of the amateur, and if a perfect job in every detail is desired, such work should be sent to a man who makes a specialty of it, such as Mr. Kornbrath.

The question has often been asked, "Does it matter if numbers are removed from a Springfield receiver?" No, of course not, provided the action is not given a very hard case-hardened treatment by leaving the part too long in the pack-hardening material (this fault is caused by the manufacturer). When a mill file will not pick up the metal as you touch the surface, or even make an impression on any part, it is better to place such an action in an oil bath heated from 500 to 550 degrees Fahrenheit, for thirty minutes, to remove the brittleness, even tho you do not wish to remove the numbers or even engrave the action. When you remove the numbers from a Springfield receiver you take off a little more than $\frac{1}{32}$ inch of metal, provided you can file this off and not grind it; you do not realize how much metal is removed by such an operation, and on a brittle receiver this weakens it to such an extent that you may have a blown-up rifle, as I have often seen happen after such carelessness.

Whenever it is possible to remove the name and number from an action, always replace the numbers on the side with $\frac{1}{16}$-inch or $\frac{3}{32}$-inch stencils, which will enable any one checking up the numbers to recognize the fact that this can be referred to and checked at any time with the records at the arsenal. A Springfield receiver is

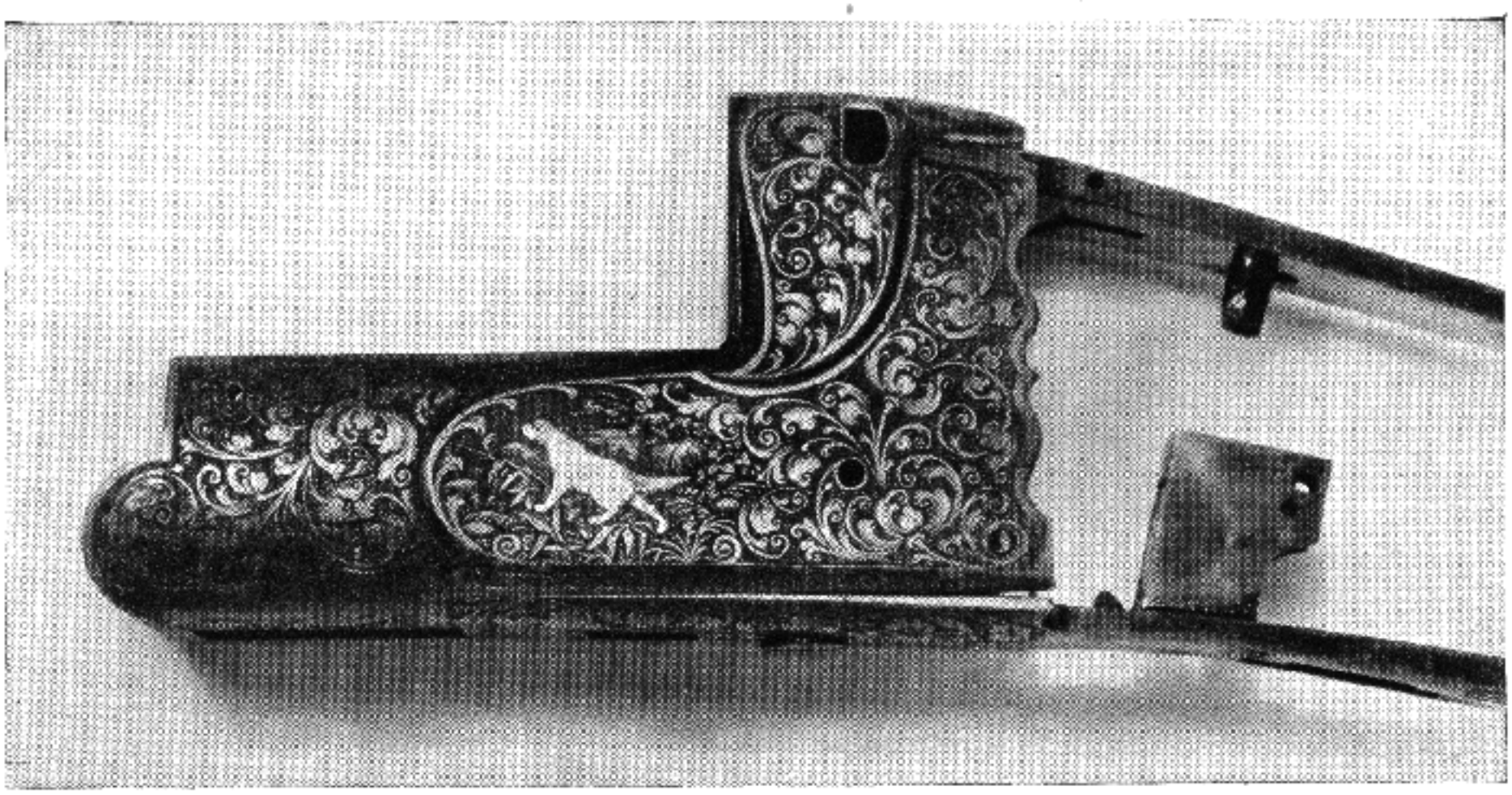

Fig. 141
Shotgun action engraved in high relief. Such scroll designs can often be used in etching

the only part of a rifle that is not expendable. All other parts are expendable, which is a government regulation.

The stamp and numbers of the U. S. Springfield armory Model 1903 are not disgraceful or unsightly; rather is it an honor to own a rifle with such a stamp, as it means that you have the best in firearms. On the other hand, when one wishes a finely engraved rifle, there is no harm in removing them and only placing U. S. SPR'FLD No.—— on the side with small letters and figures, providing everything is followed out as described.

The student will find this art as fascinating as checkering and carving in wood; and here the same quality, patience, is essential; if the beginner is without it, it must be acquired. This may apply almost equally to every art. One must be prepared to spoil sample after sample before such work can be adequately applied to any firearm. After spoiling different experimental pieces, do not give up in disgust, but continue with bulldog determination, working at it in the privacy of your own shop until you have made a success of it; then call others in to view and criticise your efforts, and accept such criticism with an open mind, thus making it constructive.

One must never be afraid of making mistakes and never give up because of them. The efforts applied to sample or even old arms will be worth while. If you think you have something definite to say when you are constructing a figure on an etching design, having probably been inspired by some good work done by others, then by all means go ahead and try your hand at bettering that work; only go at it boldly, and having made a mess of one old gun, start making a mess of another, or even a third.

Altho verbal advice from a master will save many blunders and disappointments at the outset, it is quite possible to learn what is essential from any text-book. I know this from past experience, and altho it takes longer, what you teach yourself, generally (through mistakes) sticks in a way that no second-hand knowledge can—even that gained from a teacher. Our mistakes save us from making those same mistakes again.

No one, therefore, need begin any of this work who finds it impossible to make up his mind as to what has to be done before beginning to do it. This may seem absurd, but after all, it is one of the most common failings. How many know what they really want to do? Now, in gun work, one may fumble away for months on one gun and yet arrive at something without necessarily showing the traces of one's many tentative efforts. This at least is a common enough practise.

CHAPTER XXIII

Stripping Actions, Oiling, and Minor Repairs

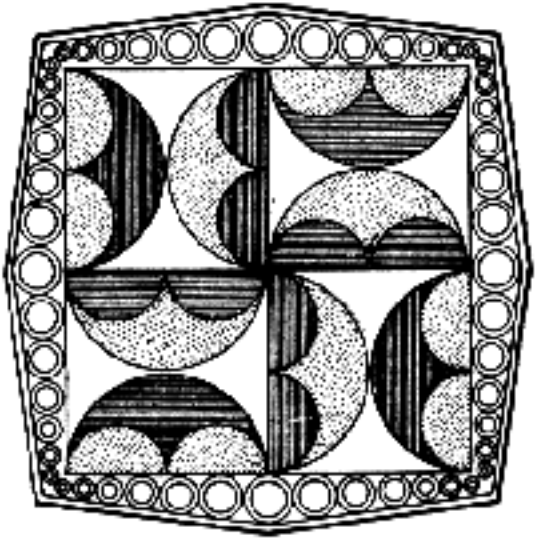

CHAPTER XXIII

Stripping Actions, Oiling, and Minor Repairs

IN SPITE of the many arms I have handled in my years of experience as a gunmaker, I must frankly admit that I could not tell you offhand the methods I have used to disassemble, repair, clean, and oil the firearms I have worked upon, even tho only three months had elapsed since that time. There are certain fundamentals you learn in mechanics that are difficult to explain. Through constant application of these principles they become a habit, and you no longer analyze just why you do a certain thing. The person who has grown up in the environment of some particular branch of mechanics may have played around as a child in the shavings of his father's workshop, and through this association he may gradually have learned to have perfect control of every tool in that particular line of work so that his mind and hands work in harmony.

I can only give instructions which will enable a student in gun work to apply good judgment when taking apart a firearm. Of course, it will be clearly understood that you must solve a great many of your own problems when disassembling a firearm and putting it together again. The greatest trouble is not to disassemble, but to reassemble some guns, for you often forget just how they came apart, especially when you have set them aside for a week or so.

Bolt-action Rifles — While we are on the subject of assembling and disassembling a firearm, it will be well for the beginner to practise on a Springfield service rifle, as there are more of these arms in the hands of American gun lovers than any other bolt-action arm. If one should practise taking one of these arms apart and then assembling it again, one will place greater confidence in his ability to go ahead and attempt the simple dismounting of other arms which he may acquire or already possesses. To begin disassembling the Springfield we shall start to dismount the magazine mechanism. With the bullet end of a cartridge or a tool shaped like the end of a bullet, press on the floor-plate catch (through the holes in the rear of the floor plate), at the same time drawing the tool or bullet to the rear; this releases the floor plate.

Raise the rear end of the first limb of the magazine spring high enough to clear the lug on the floor plate and draw it out of its mortise; proceed in the same manner to remove the follower.

To assemble magazine spring and follower to floor plate, reverse operations of dismounting. Insert the follower and magazine spring in the magazine, place the tenon on the front end of the floor plate in its recess in the magazine; then place the lug on the rear end of the floor plate in its slot in the guard and press the rear end of the floor plate forward and inward, at the same time forcing the floor plate in its seat in the guard. The Mauser military arm is handled in a similar manner.

After taking the bolt and magazine mechanism out of the action, to dismount the rifle completely, proceed as follows:

(a) Turn safety lock to dismounting bevel on sleeve and remove it by striking the thumb piece a light blow.

(b) To dismount the sleeve lock, drive out sleeve-lock pin from the top and remove lock and spring, care being taken not to lose the spring.

(c) Remove front-sight pin and remove front sight.

(d) Press in rear end of lower-band spring and drive forward the lower band by a few sharp blows on the lug and then on top with a hardwood block.

(e) Remove upper band screw and drive upper band forward in the same manner prescribed for the lower band.

(f) Move upper band forward on barrel until stopped by movable stud, and then remove lower band by slipping it over upper band and movable stud. To remove upper band entirely from barrel requires the removal of the front-sight screw and movable stud.

(g) Draw hand-guard forward until free from the fixed base and remove.

(h) Remove guard screws and guard. It may be necessary to tap gently on the front and rear of the guard bow to loosen.

(i) Remove barrel and receiver from stock.

(j) To remove the lower band spring, drive its spindle out of its hole in the stock from the left.

(k) Unscrew the butt-swivel screws and remove the butt-swivel plate from stock. The butt swivel, consisting of the plate, swivel, and pin permanently assembled, is issued complete.

(l) Unscrew butt-plate screws and remove butt plate from stock.

(m) Unscrew butt-plate spring screw and remove the butt-plate spring. Drive out butt-plate pin and remove butt-plate cap.

(n) Remove cut-off by loosening the screw in the end of the thumb piece until it disengages the groove in the cut-off spindle; insert the blade of a screw-driver in the

notch in the rear end of the spindle and force it out. Remove the spring and plunger, being careful not to lose them.

(o) Remove the ejector by driving out the ejector pin from the upper side.

(p) Remove sear and trigger by driving out the sear pin from the right, care being taken not to lose the sear spring.

(q) Remove trigger from sear by driving out the trigger pin from either side.

(r) Remove bolt stop by inserting a small punch or end of striker in the hole in the left end and forcing it from its pocket.

The leaf should never be removed from the movable base except for the purpose of making repairs.

The fixed base and the fixed-base stud should never be removed from the barrel except for restocking purposes. This also applies to the barrel, which should never be unscrewed from the receiver except when one has the proper tools.

To assemble after dismounting, reverse and follow in inverse order of dismounting.

In assembling the sleeve lock to the sleeve, be careful to compress the lock and spring while driving in the pin from the bottom of the sleeve.

To assemble the safety lock and sleeve, insert the safety-lock spindle in its hole in the sleeve as far as it will go; then with the thumb piece held vertically, press against some rigid object. Introduce the point of a scriber or small punch ground for this purpose between the safety-lock spindle and safety-lock plunger, forcing the latter into the thumb piece until it slips over the edge of the sleeve. Further pressure on the safety-lock thumb piece, together with the gradual withdrawal of the scriber or tool, will complete the assembling.

In assembling pins and screws, note the way in which they come out, and place them in a dish or discarded face-cream jar.

The floor-plate spring and cut-off spring are alike except in length, the latter being longer. Care should be taken not to substitute one for the other.

The parts which are more or less liable to require repairs on the service Springfield rifle are as follows:

(a) Bolt stop: worn by continual contact with the bolt.

(b) Cocking piece: nose worn from neglect to keep it well lubricated.

(c) Lower band swivel and screw: screw, if not riveted in place, works loose and with swivel is often lost.

(d) Safety lock: thumb piece often knocked off by a blow.

(e) Stacking swivel and screw: screw, if not riveted in place, works loose and with swivel is lost.

(f) Striker: point burned by defective cartridges or broken by snapping on empty chamber.

(g) Front and rear guard-screws coming loose: keeper screws should be placed on the sides of these, particularly when you find them working loose often. The method in which a keeper screw is placed alongside of the large screw is as follows: a tap drill is used to drill a hole just so far from the head that when this is counterbored the head of the keeper screw will engage part of the fillister head on the large screw and hold it in place.

The question is often asked: "What are the injuries which do not render the parts unserviceable on the Springfield rifle, or how can the rifle be used when certain parts break?" To such a question the following answers are given:

Bolt—The entire flange at front end may be broken off except a small portion on the opposite side from the extractor hook, which is required to hold, in connection with the extractor hook, the empty case while it is being drawn to the rear for ejection.

Cocking Piece—Moderate wearing of nose. The nose will wear until raising and lowering the bolt handle fails to cock the piece.

Extractor—Moderate wear or break on edge of hook.

The parts not essential, or only so to a degree, are the ejector, safety lock, cut-off, bolt stop, sleeve lock, floor plate, magazine spring, and follower.

In the absence of the ejector, the empty cases drawn to the rear by the extractor can be removed from the receiver by the fingers.

The safety lock is merely a precautionary device, and its absence does not affect the usefulness of the arm.

In absence of the cut-off, the arm can be loaded from the magazine, but the magazine cannot be held full in reserve; in single loading with the cut-off wanting and the magazine empty, the owner should load directly into the magazine, as otherwise the forward motion of the bolt will be stopped by coming in contact with the follower. In this case, care should be taken in drawing the bolt back not to draw it from the receiver.

The absence of the bolt stop and sleeve lock does not affect the usefulness of the arm.

The absence of the floor plate, follower, and magazine spring only prevents the use of the magazine, but does not prohibit the use of the arm as a single loader. The owner of this rifle should know such facts and appreciate the instructions given; often these can be applied to other bolt-action arms.

When the student is working on an arm, all such points as the movements of working mechanism should be smooth and free. Take for illustrations the Springfield, Mauser, Winchester, M/54, Remington 30, Enfield, etc. Due consideration must be given the bolts, as these should be worked in until there is not the least indication of any resistance. When the cocking piece is drawn back in the firing position and released, the

movement should be free, exerting its greatest striking force by the time it has reached the primer at the end of its travel. When raising the bolt and placing the cocking piece in the firing position, it should rise with ease, without the least sign of any grinding sensation on the cocking cams. Trigger pulls must be worked over; they will be treated in another chapter.

On all bolt-action rifles that have the central magazine directly under the bolt with a follower bearing against it by a flat spring made in the form of the letter M, the bolt rides hard in the upper bolt-slide channel; this is caused by a rough surface left by the broach when it was pulled through, forcing these cut-outs the full length of the action where the bolt rides. Suitable pieces of wood must match to fit this channel, allowing enough room so that fine emery cloth can be glued to the sides. Then the channel must be polished so that all deep tool marks are removed. The fine French or Turkish emery paper is used on wooden holders until a high polish is produced. You will often find extractor collars on the bolts projecting over the bolt surface. This is a common fault with bolts where the collar has been removed. This collar is bent in position when manufactured and should not be removed unless proper tools are at hand to replace it. It is an easy matter to remove the high points with a fine file with the extractor in place.

The follower must be polished to a very high finish and the rear ground off similar to the Mauser, which allows it to ride this down. Most military arms have a square end on the follower to lock the bolt open when the last cartridge is removed from the magazine, and the bolt is withdrawn with the fired case. The only part which bears against the bolt is the rib which serves to locate the cartridges in the magazine and guide the last cartridge in the chamber. Care must be given the rib so that when polishing the edge is not removed; but the top must be well rounded and polished, so it will allow the bolt to ride free over the surface.

There are a number of stoning operations to perform on the receiver and bolt, especially the bolt and sleeve. Having completed all the polishing of the receiver channel with a fine square oilstone, place a small radius on all sharp corners of the channel, particularly on the forward end of the bridge at the clip slots. Also stone the extracting cam surface on the left-hand side at the rear of the bridge. There is considerable stoning to be done on bolt cam and cocking-piece cam. The sleeve must be stoned on both sides of the channel where the cocking piece and sear notch ride. Radii must be stoned on the front and rear also. While the safety is removed, stone the safety-lock plunger groove in the recesses so that the plunger will ride free when moved in any position. The Enfield has one of the best types of safety; it is located on the receiver next to the bolt. The Mauser and Mannlicher are free of springs or plungers so these are free in action.

Assuming that all stoning operations have been completed, the bolt is now ready to be lapped in. Assemble all parts, and mix flour carborundum with olive oil until a thin paste is formed. Coat all working surfaces even to the threads on the sleeve which screws into the bolt. With the tension of the magazine spring against the bolt, begin to work this back and forth the full length with your fingers on the cocking piece. The lengthwise movement can be worked slow or fast and will establish a perfect bearing surface on the upper sides of the channel. This backward and forward movement may continue for some time. Then proceed with the locking motion of the bolt which begins to lap the faces of the cams and threads. It will require between one and two hours or even longer to do a really good job on some bolt-action rifles. When advanced to a point where you think everything is well worked in, remove the bolt and magazine, disassemble all parts, and wash these well in gasoline. Such an operation should, throughout the movement of the bolt in operation, give it freeness. An oily movement, when once realized, can never afterward be mistaken. Then by a regular pressure upon the bolt handle it is raised with freedom, even in rapid succession. The trigger should be released with a clean, brittle snap. Everything about it will be retained in your memory. All other bolt-action arms will have the same freedom of action.

When it comes to disassembling a bolt-action rifle, the bolt is the hardest problem for most men, but very simple when once understood. The most difficult bolt of all is the Mannlicher; it is fairly simple with the exception of the rifle where the cocking piece screws on the firing-pin rod, but this is on the military model. On the standard sporting model, all that is necessary is to press the safety out of the notch and turn the rear section out with half a turn to disengage the cocking piece from the firing-pin rod. To carry out full details on all bolt mechanisms to be dismounted and assembled requires the same lengthy explanation as I am about to give for the Springfield M/1903 rifle. I select this rifle as it is one of the most popular arms. When this is mastered all others will be simple.

To Dismount a Bolt — Place the cut-off at the

center notch, cock the rifle and turn the safety lock to a vertical position; raise the bolt handle and withdraw the bolt from the receiver. Hold the bolt in the left hand, press in the sleeve lock with the thumb of the right hand to unlock the sleeve from the bolt, and then unscrew the sleeve by turning it to the left.

Hold the sleeve between the index finger and thumb of the left hand, draw the cocking piece back with the middle finger and the thumb of the right hand, turn safety lock down to the left with the index finger of the right hand in order to allow the cocking piece to move forward in the sleeve, thus partially relieving the tension of the main spring. With the cocking piece against the breast, draw back the firing-pin sleeve with the index finger and the thumb of the right hand, and hold it in position while removing the striker with the left hand. Remove the firing-pin sleeve and main spring. Pull the firing pin out of sleeve, turn the extractor to the right, forcing its tongue out of its groove in the front of the bolt, and force the extractor forward and off the bolt.

To Assemble Bolt — Grasp the rear of the bolt with the left hand and turn the extractor collar with the thumb and index finger of the right hand until its lug is on a line with the safety lug on the bolt. Take the extractor in the right hand and insert the lug on the collar in the undercuts in the extractor by pushing the extractor to the rear until its tongue comes in contact with the rim on the face of the bolt. (A slight pressure with the left thumb on top of the rear part of the extractor assists in this operation.) Turn the extractor to the right until it is over the right lug. Take the bolt in the right hand and press the hook of the extractor against any piece of stationary wood or some other rigid object until the tongue on the extractor enters its groove in the bolt.

With the safety lock turned down to the left to permit the firing pin to enter the sleeve as far as possible, assemble the sleeve and firing pin. Place the cocking piece against the breast and put on the main spring, firing pin, sleeve, and striker.

Hold the cocking piece between the thumb and index finger of the left hand, and by pressing the striker point against some substance—not hard enough to injure the point—force the cocking piece back until the safety lock can be turned to the vertical position with the right hand. Insert the firing pin in the bolt, and screw up the sleeve (by turning it to the right) until the sleeve lock enters its notch on the bolt.

See that the cut-off is at the center notch, and hold the rifle under the floor plate in palm and fingers of the left hand. If the rear end of the follower has not been ground on an angle, extend the thumb over the left side of the receiver. Take the bolt in the right hand, with the safety lock in a vertical position and the safety lug up. Press the rear end of the follower with the left thumb and push the bolt into the receiver. Lower the bolt handle and turn the safety lock and the cut-off to the correct position.

While you are assembling a bolt, always place a few drops of gun oil on the working parts. Too much oil retards the free working of a bolt, so care must be used when applying this, particularly in a cold climate.

It would be well for the student to collect catalogs of all arms, as they generally contain useful information, particularly on the assembly and disassembly of the standard bolt actions. It would be a waste of time for me to continue with such information, as these are simple arms in construction; and as Colonel Whelen has gone into the subject of lever-action rifles in his book, *The American Rifle,* I would only be rewriting the subject from a different angle. Of course, a manual could be published for the aid of the student, for a few general ideas would not be out of place, particularly on some of the obsolete models, and even some of standard manufacture. What these are we need not state. In referring thus to American rifles or shotguns the criticism does not include our better grades, but some of the misfits selling at a price far below that at which the manufacturer can make any profit. Still, they are often what the public wants and buys. But when these don't work, the purchaser wants the gunsmith to place between six and fourteen hours' labor on such arms for a dollar and a half. Many foreign revolvers and automatic pistols come to the gunsmith's shop for certain repairs where two or three small parts cost more than the original price of the arm, and the gunsmith has another reason for unfavorable comment. It is best to disregard these arms altogether, for it is only natural that in time you rebel against such products.

Shotguns — This subject alone requires a lot of instruction, for there are many different kinds and makes, ranging from our cheap American guns to the best of British manufacture. The first consideration when working on shotguns is the necessary screw-drivers for different shotgun actions, so that the heads of screws will not be marred by using tools bought in a corner hardware store. The student will often be called upon to clean and make minor adjustments on various shotgun actions, and the question often confronts him as

to how to disassemble the gun and get to the locks and the other parts of the mechanism which make up a shotgun.

Many beginners look upon the mechanism of a shotgun as a mystery beyond their range of mechanics. No doubt a good many gunsmiths do, too. Often a good-grade double gun only needs a thorough cleaning and oiling, and this operation can be done by any gun owner with a few suggestions, providing he secures some of the necessary tools. Do not try to remove all screws in sight or try to drive out all pins, either. There are generally two screws which hold in place the guard, which must always be removed; and under that are the rear tang and trigger-plate screw. On the tang underneath the top lever is the large trigger-plate screw, which can be removed by pressing the lever to the right. Then either one or two screws hold the bottom plate; one always holds the trigger plate to the action. By removing this trigger plate it is possible to remove the stock. This rule is flexible and cannot always be followed, since actions are made differently. On some it is necessary to remove the sear pin before the stock can be removed from the action.

On an L. C. Smith double you must always remove the screw in the trigger plate where the spindle of the top lever is fastened, and when this snaps out of the trigger plate, it is generally very difficult to place it back again in the plate when reassembling the gun. This gun has a safety lever rod also which is not engaged to the action but only lies in a groove in the stock under the tang; in most cases this drops out, and it requires a considerable amount of time to discover where this slips into place, either in the action or the trigger plate.

When removing the mechanism from the shotgun the beginner should work slowly and carefully, and by all means think before removing a screw. Your screw-drivers should fit and be pressed well into the screw slot—not only one screw notch, but every screw—to prevent damage to the head in any way. If you contemplate the slightest danger of getting the parts mixed, by all means draw a sketch on paper, lay this on the bench, and place each screw or pin at the marked place on the paper. Naturally, there will be no need for such precautions after a few shotguns are disassembled and reassembled, but such a necessity may exist at the very beginning.

The beginner should form the habit of collecting small shallow jars such as cold cream comes in. The shallow ones may be used for screws, or a number may be used for an arm that is disassembled. Cards or slips of paper can be used to describe just where the parts have been taken from. When once this habit is formed, one will have little trouble losing small parts by having them roll from the bench to the floor.

The following instructions and suggestions generally refer to modern double guns much as the Anson and Deeley action. The main springs are the hardest parts to remove and assemble, so my advice for the amateur is to let these alone, providing there is nothing seriously wrong. All other work is simple enough when a fair understanding of the principles of the working parts is attained.

When a man brings a shotgun to the average gunsmith he usually wipes the old oil and dirt from the parts with a rag, looks the parts over, then puts on fresh oil—more than likely merely some light motor oil or vaseline—and then puts the gun together again, leaving indications of the grease or oil around the locks and where the stock joins the action. The owner, no doubt, has an idea that a fine oiling job has been done. This is a very poor way of doing such jobs, for a portion of the old gummy oil and dirt will be left to combine with the new, and in a short time the locks will be as bad as before. Every part of a shotgun action should be thoroughly cleaned in gasoline, allowing the action to soak for at least fifteen minutes; then, with a small round stiff brush, get into all corners while the action is still wet with the gasoline. Wipe and dry thoroughly before any gun oil is used. Chapter XXV gives the proper method of preparing the oil for actions, and it is the most reliable method for any firearm. Before any parts are assembled they should be completely polished to a high finish.

One of the best receptacles to hold gasoline is a covered iron kettle which will hold a gallon. This should be placed in a location where there will be no danger if fire breaks out.

The cheaper arms should have the parts case-hardened and then repolished. The springs on such arms are always rough, and a considerable amount of work must be done before they are placed back in the action. In fact, you will find enough work to occupy the best part of a day. In many instances you will find arms which have been long neglected, where water has gotten into the working parts and rusted them very badly. If the arms have been near salt water, the dirt and rust will combine so badly that a lot of work is necessary. In such cases the parts should be soaked in a bath of kerosene for half an hour, which will help to dissolve the rust and dirt. Care must be taken that you do not polish too much metal off the working parts (such as the locking lugs), and cause the gun to become loose.

When oiling a shotgun, or, in fact, any firearm, only enough oil should be applied to lubricate the parts. There is much more danger in applying too much oil than too little. It is always best to purchase one of those very small oil cans from which only a drop appears when you press on the bottom of the can. Then, with a camel's-hair brush or a toothpick, work this well over the polished surface of the parts. The best kind of oil to use on all finely made arms is "watchmaker's oil." This is rather expensive—a single small bottle costs 25 cents; however, this amount of oil will take care of a good many firearms, providing you apply it properly. The cost is really not entitled to consideration because the oil is so decidedly superior to any other.

Be very careful not to handle the polished parts of gun locks with sweaty hands or allow these to lie about for a day or so before any oil is applied. It is always a good idea, when any parts are given a light polish, to have a cloth well moistened with gun oil and give these parts a good rubbing over. A jar holding an oily cloth should always be at hand for such purposes. Keep it covered so that no dust or dirt can collect on the cloth to cause scratches on some of the finely finished arms. It should be used freely upon any arms which are handled by different persons, for some have more acid in their perspiration than others, a feature which causes rust to appear very quickly and which can never be removed by simple methods. Very few men realize how much damage perspiration causes on a polished surface, particularly in the summer time, when this condition is at its worst. Very few students are inclined to take this precaution, but it is worthy of consideration if you are to be ranked among the best workman. Handling the parts with naked fingers is very likely to leave them in a condition that will eventually cause them to rust.

Now, to assemble the locks, particularly when the tumblers have been removed and where flat springs have been used. Follow previous instructions by placing all parts in the order in which they have been removed. As most flat springs have an extension on the end which engages the tumblers, many amateurs want to place them in the opposite way. On a number of guns this can be done, but when you want to cock the arm, strange to say, it does not work.

To assemble tumblers with flat springs is an easy matter in the padded vise, providing you have cut suitable blocks of wood to fit properly against the tumbler to compress the spring evenly in order to engage the pins or screws. A simple way to assemble these if you have either a small arbor press or a drill press, is to compress the spring by placing suitable wooden blocks over the tumblers and exerting pressure on the spindle or ram until the pin engages the tumbler hole. As a rule, when an amateur removes tumblers and springs from a shotgun, he looks upon this assembly as a hopeless case; I generally have a number of such arms shipped to me in the course of a year with all the parts in a box, and frequently some parts are missing. Some alibis I hear are rather amusing, while others tell the truth. The old expression of how they collected the parts in a bushel basket is not far-fetched, altho I have never had them brought in to me in so large a basket. At one time, however, one arrived in a regular market basket; a market basket holds half a bushel, so we can consider the expression well founded with half its value.

Some shotguns such as the Ithaca, Parker, Fox, etc., have coil springs, and these are more difficult to assemble than the flat type of spring. Some have so much compression that I find the best method is to assemble such actions on the drill press, using the spindle as a ram. In assembling the action to the stock, care must be used in order to center the safety in the catch on the tang. When the trigger plate is set in place on the Parker, the safety lever is imbedded in the stock, and it is an easy matter to enter this by using a pair of tweezers, catching it on the under side and working it back and forth until the end enters the square notch in the under side of the thumb piece.

The majority of shotguns are simple to assemble, except those on which it is necessary to place the sears in position after the action is set in the stock. It is necessary to do this on the Parker, for on this gun the sear spring is in one piece sitting in a cut-out in the action. All that is necessary is first to press the sear down with the thumb until the pin enters, drive the pin through until it enters the other sear, and drive the pin in flush with the frame; then the trigger is ready to be assembled, together with the trigger guard. See that all screws are placed in position in the same manner they were removed and not pulled up any tighter than they were when taken out. On some shotguns the end of the sear which engages the triggers is turned too close, so that any additional tightening on the screws changes the trigger pull and sometimes will not allow the sears to engage the tumbler notch and may make the gun unsafe for use. At times this condition is so sensitive that when you fire one barrel the other jars off from the recoil, causing what is called a "double," which is not so pleasant to the shooter.

After placing the screws in position and before

the trigger guard is screwed in place, inspect the trigger for this fault. As you touch the trigger with your index finger there should be a slight amount of play between the trigger and the sear; not enough so that there is a movement of 1/8 inch before it touches the sears, but only a little freedom between the two, say the thickness of a piece of paper. When you find these tight, or without play, remove the sears and file a small amount off the engaging off-set; then repolish the end. In other instances it requires the bending of the sear; this can be done providing it is soft half-way up to the end which engages the tumbler. A slight tap with a hammer and piece of copper is usually sufficient to bend them the required amount. The sear must be held in the vise in such a manner that you can measure or detect the amount the end moved, for it usually requires only a very small amount of bend to have the correct amount of play. At times you may have to assemble and disassemble two or three times until this condition is correct.

Single Triggers — The amateur should never attempt to do any work on single triggers unless he has had some mechanical training which will enable him to understand their working principles. I find that the most common defect is that the sear pressure is too great and does not allow them to function properly. The timing of the sears and tumblers on the single-trigger mechanism must be just so or you will find that one can be pulled off very easily and the other will not pull off, or vice versa. The simplest and best is the Lang; this any student can take apart and assemble with ease. The L. C. Smith or Hunter single trigger, together with the Miller, are rather complicated.

On the American arms and also some of British manufacture the greatest trouble is generally caused by single triggers installed in arms which have been changed from a double-trigger gun to a single-trigger. Such arms when sent to the manufacturer to have single triggers installed function perfectly at the factory. But after they have seen some service, they fall out of adjustment, frequently from a weakened stock or the changing of the wood in some manner. It is inadvisable to have single triggers installed in an old gun. The owner generally has more or less trouble from the time these are installed until he puts it away, disgusted.

Every shotgun having a delicate single trigger should be gone over once a year at least. If you own such an arm, oil it after each hunting season to make sure that no water has penetrated into the working parts and caused them to rust. Then the gun may be put into the gun cabinet and you will know that everything is perfect for the following season.

Automatic Ejectors — As a rule these are very simple, especially those in American arms, and most of them are made with coil springs. Nearly all British and German types have flat springs which are made very carefully. I find that these seldom get out of order, and if they do, the sears need stoning so they will not be too sensitive. The flat springs are made very heavy in foreign arms, and they require a spring vise to disassemble them correctly. These and the forearm catch come under the same heading, as they are attached to the fore-end.

You generally find more trouble with the fore-end catch than you do with the ejectors, due to the notch being worn, or the fore-end not being deep enough in the stock and causing the fore-end to become loose. The fastening rod may be bent, and not allow the iron to bear against the radius on the action; the result is that you can feel a slight movement. Examine the fore-end to see if it has broken loose from the rib, for at times this happens and the owner is unaware of it. If such a condition exists, the rib must be sweated back in again and the finger fitted into the notch. Often the locking lever is too short; therefore, it must be lengthened so that the proper snap is given when it is set in place.

The student who is capable of becoming proficient in the art of gun work will require no special rules when assembling or disassembling a firearm. He will also be able to pass judgment upon the different makes of firearms, and he will readily distinguish the better grades. He will also know that a firearm fully finished in every particular is far better than one partly finished, the inside left rough, and all parts still showing heavy tool marks. Prompted by such consideration, he will seek the better arms and demand them.

You will find that it pays to know your gun and to apply the proper care. Year in and year out, it pays. Some arms are more complicated than others, but if you treat them all as delicate pieces of mechanism you will be working on sound principles. There is just one more warning I must give, and that is the undue snapping of a firearm without snap caps in the chamber. This is perfectly all right for some bolt-action rifles, but on shotguns and single-shot arms—never!

CHAPTER XXIV

Minor Repairs and Adjustments

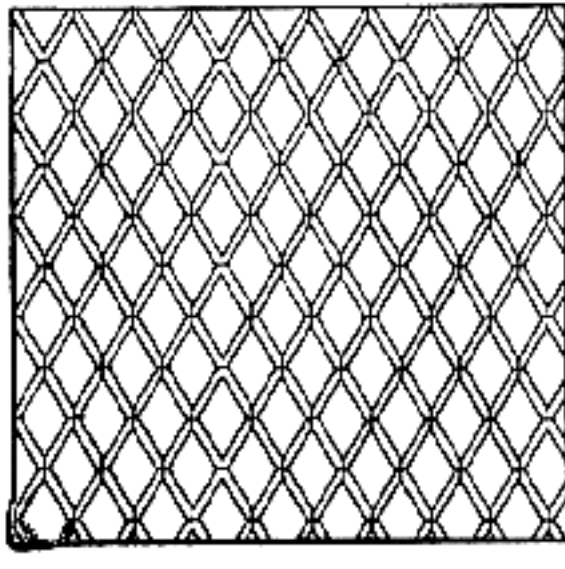

CHAPTER XXIV

Minor Repairs and Adjustments

GOOD shooting is an art which requires the study not only of rifles but of ammunition as well. One can never expect to acquire perfection if he does not have some natural talent or capacity to grasp the fundamental and invisible operations of the arm he is using. Any man with a fair understanding of mechanics is capable of employing his best judgment in the use of tools and can become a passable mechanic, but without this peculiar natural inclination, which no one can clearly define, it is impossible for that person ever to excel as an expert. No matter where you go, you will find some men better fitted than others to solve problems pertaining to mechanics. I found in my past experience at the Arsenal in the small-arms tool department that there were very few men who could carry out the more exacting work on tools and gauges. These men were born mechanics, and the same inherent ability will be found in all lines of work, even in the higher professions. Craftsmen like these are not made but born. It is not often we meet with such men, for they are as scarce as true painters and true poets. When one does meet with such a man, one recognizes his ability almost immediately. I believe there is some peculiar balance in his makeup or organization; it is folly to envy such a person, and it is not worth while to brood over the question if such a peculiar balance did not fall to your lot. If you should wish to succeed, try a little patient study of your own shortcomings; apply determination, and practise on one subject until you arrive at perfection. Practise will at least bring you up to average, and that will leave no reasonable cause for complaint.

Every man who uses a firearm at all feels an ambition to use it skilfully. So when the average person, or even the expert rifleman, finds himself falling short of making good scores, he will often carry his difficulties to a gunsmith, but in a great many instances he can solve the problem himself.

Your best experience will come from shooting, however, and this part of the subject must not be brought down to the mere discharging of a firearm. The afterthoughts for the cause of this or that will release the priming charge, so to speak, and open up hidden or dormant mechanical ability. Testing a new rifle is like trying out a new car. There are many minor adjustments to make. A new factory arm does not require as many as a custom-made arm, but to the crank there are a hundred and one obvious faults that must be corrected. A second-hand arm or an arm which has seen better days may perform a little better if the muzzle is remedied.

Removing a Muzzle — Because the muzzle of the .22-caliber barrel is particularly exposed to atmospheric conditions it is more susceptible to rust. Likewise, humidity has less action on the balance of the barrel, and consequently it is less troubled with that problem; that is, of course, unless the spots have spread until they encircle the entire barrel. In the event of the former situation, this difficulty can be remedied by cutting off the end of the muzzle about one-half or one inch. Very often this rejuvenates the gun, for the bullet then has its original perfect delivery at the muzzle, and accuracy results.

For the best results, the barrel should be cut off by means of a lathe, but the muzzle end can be, if necessary, removed with a hack-saw and then filed square. This process has been described in Chapter I, but you can advance still further, and do a much better job. When cutting off the muzzle it is essential to have it absolutely square, as the bullet must escape from the muzzle at a true and equal bearing; when one side is high and the other low—and this variance only requires a difference of 0.001 inch—you can never expect to obtain real accuracy, for the escapement of gases is greater at the low point, tending to tip the bullet in various directions. This is an established fact derived from experiments made at the Frankford Arsenal. For this reason, I have always tried to impress upon every one how essential it is to have the muzzle of any firearm perfect with the bore.

Assuming that you do not have a lathe in your equipment, cut the barrel off with a hack-saw and file the muzzle square. Clamp the barrel in an upright position in the vise. With a 60-degree countersink, break the edge of the bore to a depth of $\frac{1}{32}$ inch. If a small lathe is available, a counterbore with a pilot should be made. The reamer should have six flutes or more, or one as shown

in Figure 12. To secure the best results, the flutes should be stoned so that the cutting edges will not dig in or chatter when it is revolved. Here again I must impress upon the reader the need for a square muzzle. Suppose, for instance, that the muzzle is cut 0.003 inch off square, and there is a low and a high side. When the reamer begins to cut, even tho it is on a taper, the high side will always push the countersink toward the low side, and it will have to cut more off the low side than intended, particularly if it is one without a pilot. Of course, any reamer will follow a hole, but you will have different tools, which, you must bear in mind, are only cutting on the edge to a certain portion of its diameter, and the high point will always crowd the cutting edge against the low point, making it eccentric to the bore. By using the countersink, a part of the metal is eliminated for the lapping operation to follow.

Purchase various sizes of round-headed brass and wood screws. The round heads act as the lap. Start to lap with the smallest screw; chuck this into the hand breast-drill or brace, and with a small quantity of flour emery mixed with olive oil, cap the ball portion of the head into the countersunk portion of the muzzle. The caliber of barrel governs the size of the screw heads to be used. If, for instance, the barrel is a .22, you will use one measuring about $\frac{5}{16}$ inch, and so on, the heads always in proportion to the caliber. Continue to lap until there is a perfect bearing on the inner surface; if you continue the lapping operation too long you will have too great a concave surface.

A muzzle lapped by such a method produces very satisfactory results, and many old barrels can be given new life. If the muzzle of either rifle or revolver has been injured in some way, such as by dropping, it can be satisfactorily repaired in this fashion, only reversing the screw, using the angle on the bottom side and first cutting off the threaded portion.

When lapping out a muzzle in this particular manner, a "turning over" of the lands and grooves will be found which is better described as a burr. This must be removed by means of a stiff bronze bristle brush, or a patch wound around a bronze brush, and fine flour emery and oil. Much care must be used with the oil and emery so that the muzzle is not enlarged. The stiff bronze bristle brush is usually the only remedy required. It will be surprizing and satisfying to be able, by means of so simple an operation, to bring new life back into a rifle barrel; this can be done, provided there are no other faults more serious than the faulty muzzle of the barrel.

Poor Ignition — Inaccuracy is always first blamed on the ammunition, and not on some other cause; yet such cause may be in the mechanism of the rifle itself, particularly the end of the firing pin. Figure 142 illustrates ten shots fired from

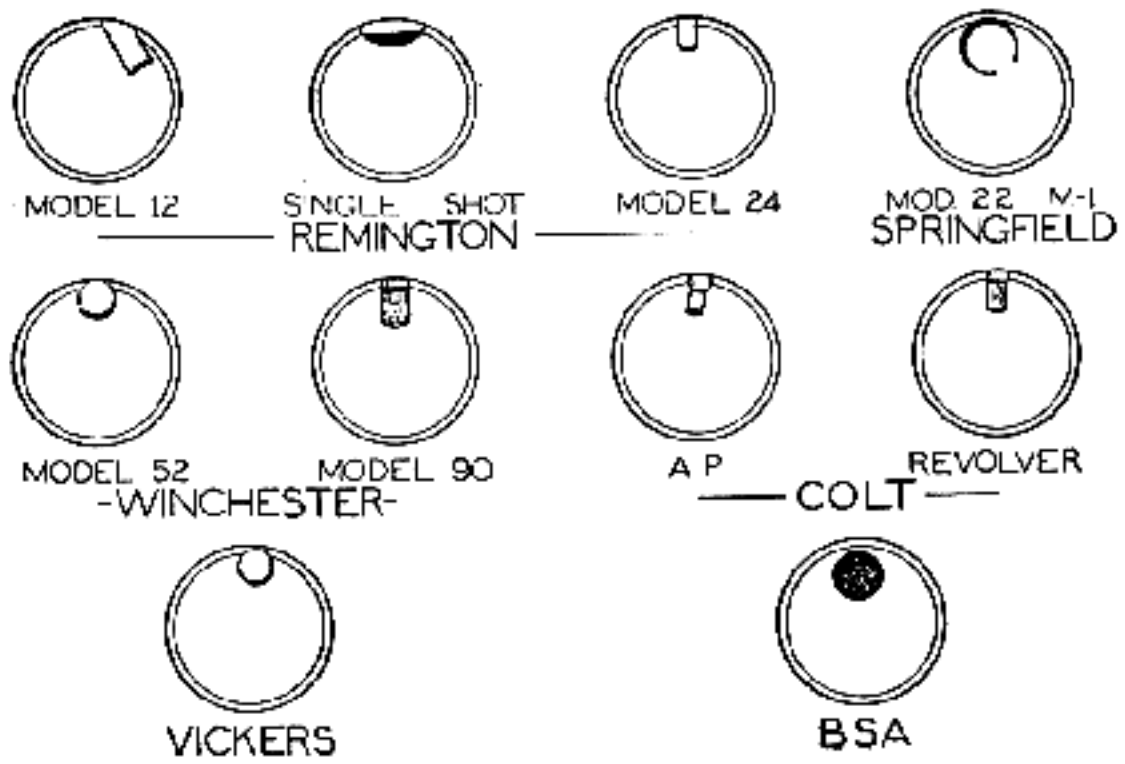

Fig. 142
Firing-pin impressions left on caliber .22 cartridge cases

different rifles and two side arms. The .22-caliber rim-fire cartridge must have a perfect support against the counterbored part of the barrel if it is a single-shot action, or a perfect support against the face of the barrel if it is a bolt- or slide-action arm. On single-action arms you will usually find the greatest offenders in firing pins, extractors, poorly counterbored chambers, too great a space between barrel and breech block, the chamber rounded too much at the end, the counterbore too shallow, breaking the primer mixture when the breech block is forced into position, etc. To have the correct ignition in a .22 rim-fire cartridge, it must be remembered that there is only one correct spot for a firing pin to strike, and that is at the top of the head of the case; consequently, when the blow is struck there should not be any cushion effect, but a solid foundation with correct head-space.

In such a case the fulminate in the rim is strictly localized, and the firing pin must hit it in such a manner that it will receive instantaneous ignition when the pin hits the rim. The firing pin and spring are also sources of continual trouble, the firing pin in particular. In order to secure correct and positive ignition in a .22 rifle the firing pin should be perfectly flat upon the face, and the diameter should be governed by the force the spring or hammer is capable of making upon the rim. The impression of the firing pin should be deep instead of light and shallow. The Model 52 Winchester will sometimes refuse to shoot. Examine the firing pin and see if the projection is correct. If not, you will find this pin set back and

the face at a slight angle. When this is found to be the case, disassemble the bolt, remove the firing pin, and lengthen it by peening it out; this can be done with a light hammer and by holding the striker on a hardened piece of steel set in a vise. Do all the peening back from the point or between the point and the spring shoulder, where the angle comes in, up to the round or small part. Throughout this operation, frequently try it in position to see how much it has been lengthened; also keep it straight so it will not be retarded by binding on the sides. When it has been lengthened to the desired distance, file at right angles with a fine needle file and stone the face to remove any file marks. Assemble the bolt again and test it on the range and you will be surprized to see its accuracy. This operation has eliminated the dropping of one or two shots that could never be accounted for, and the slight change has worked wonders.

The same trouble is often experienced with the Springfield, caliber .22. You will notice in Figure 142 the indentation left by the striker on the rim of the case. At times the face of one of these strikers becomes very rough from the continual hitting upon the rim or from other causes. Stone the face at right angles and make sure that it has the proper projection; if not, it is better to send for a new striker rather than take the chances of lengthening it.

Do not lighten any cocking pieces, firing pins, or strikers, believing that you will secure faster lock time. Instead of lightening these parts, work in the opposite direction and try to see where it is possible to eliminate friction by stoning the hard bearing surfaces on the parts. The primer must receive a quick crushing blow to obtain immediate and instantaneous fire from the primer mixture, whether center- or rim-fire cartridge. Misfires are not always caused by primers except in certain lots of ammunition; the main cause is usually weak firing-pin springs, or the firing pin binding in the firing-pin hole, due to upsetting or retarding the blow to such an extent that misfires take place.

Study Figure 143, showing, in three different cases, correct ignition at the time ignition takes place upon the blow of the striker. In the rim-fire illustration, the striker is not always at the top as on many of the old-style single-shot actions, in which a number were at the bottom over the extractor. The proper position is at the top and should be there in all target arms if proper ignition is to take place. Study the Berdan primer and European cartridge, also the American design of cartridge case. We would very likely choose the American design, which shows a greater amount of flash in the illustration, but in reality both are about equal. The Berdan primer is the best, including the design of anvil in the primer pocket which is solid; in our American primer we have a separate unit in the primer cup in the form of an anvil, and the manufacture of this type of primer must be very exact in order to obtain perfect ignition. The foreign design, having the anvil in the base or primer pocket of the case, gives a solid foundation for the striker to hit and does not rely upon the anvil as in our primers; therefore it has a much more sensitive primer when hit by the striker.

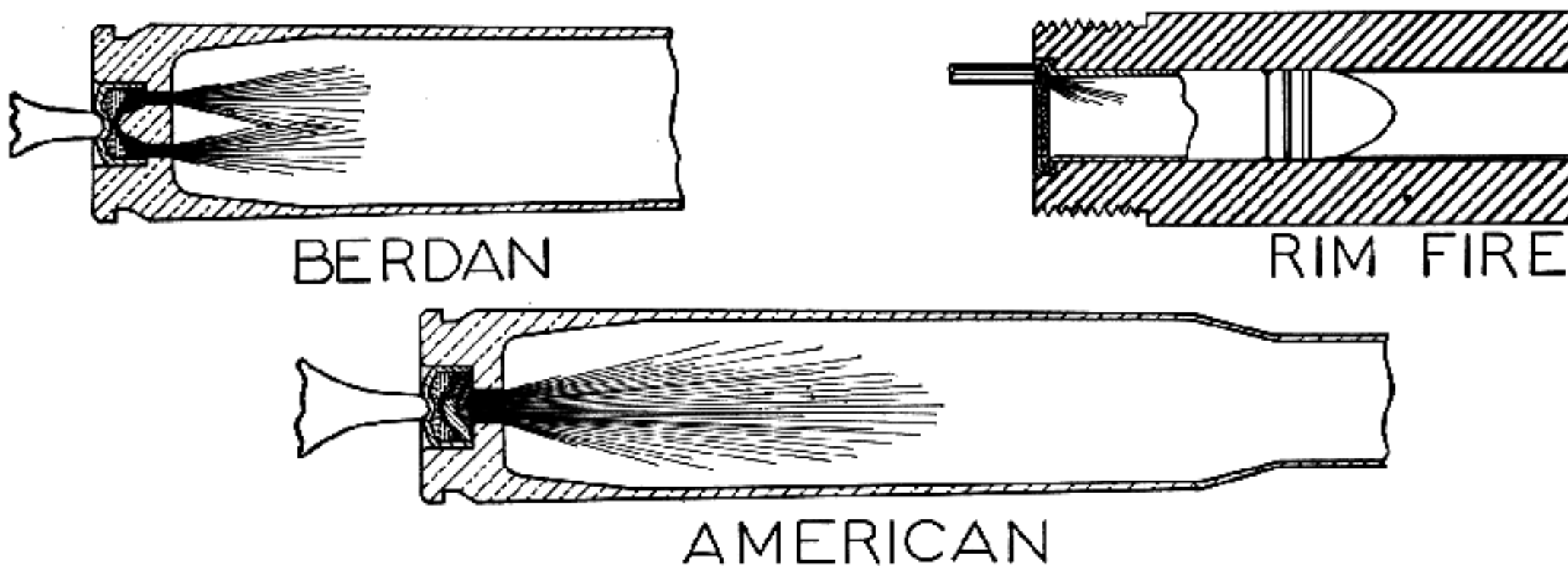

Fig. 143
Primer flashes showing how propellent is ignited when the firing pin hits the primer

To obtain the best results with a firing pin or striker on these forms of primers, the pin should be made at the point, as illustrated by Figure 144, with a projection of 0.065-inch maximum and 0.055-inch minimum, with the end always highly polished and free from scratches or tool marks. Do not try to change any of the parts in the design of strikers, cocking pieces, etc., to lighten the firing-pin mechanism, for such a primer requires a very hard blow and any alterations are dangerous.

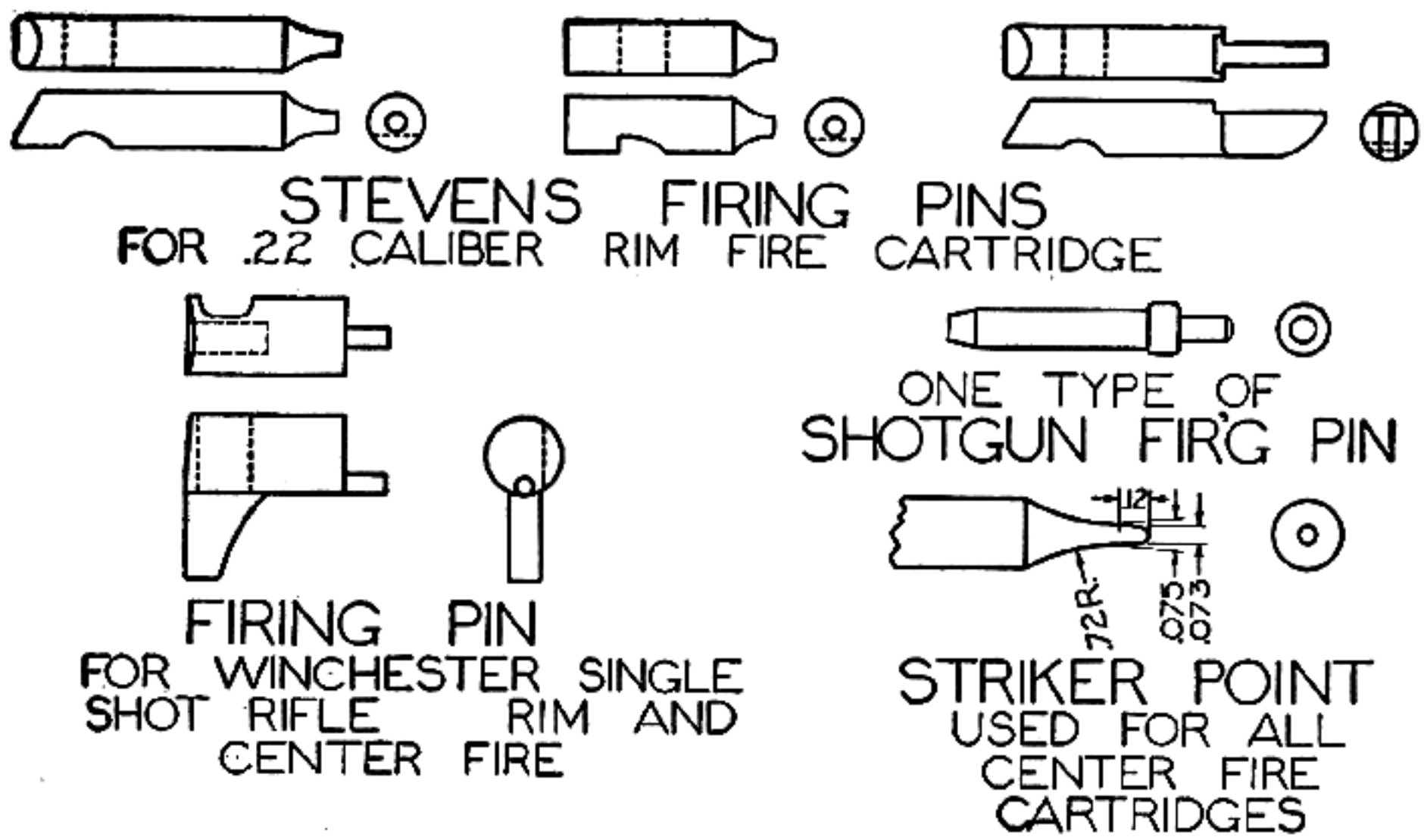

Fig. 144
Types of firing pins

The foregoing are the usual troubles revealed upon testing a rifle, barring bad trigger pulls, sights, poor extraction, free working bolts, etc. The main object in testing is to gain the necessary practise to be able to solve the various difficulties; this practise will lead in time to a perfect understanding of firearm principles.

Alterations on Winchester Single-shot Action — Changing a single-shot action from rim fire to center fire can be accomplished without the change in the firing-pin hole, a change which is usually done by bushing the block and making a new firing pin.

Figure 145 illustrates the Pope design of an eccentric lever pin which makes it possible to change from rim fire to center fire without altering the block. If the correct sizes are to be had for one of these eccentric pins, those who are about to make such an alteration will find it a sim-

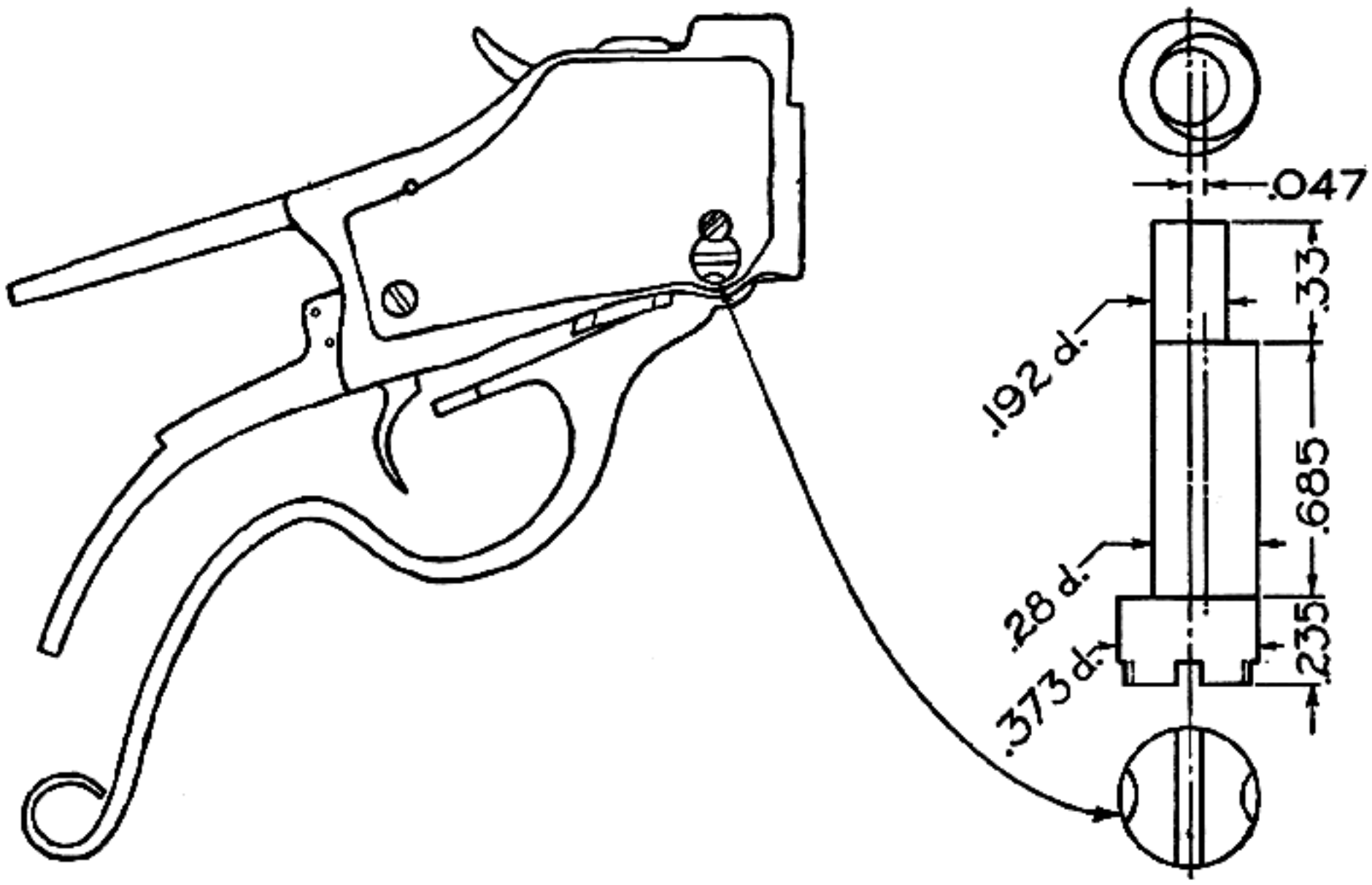

Fig. 145
Eccentric lever pin—Pope design. When two barrels are used on the same action this changes rim-fire cartridge to center-fire

ple matter. Any one having a lathe and drill press can make one of these. Make the pin first and do the necessary drilling and reaming on the action and under lever so the pin will fit without any lost motion. A keeper screw holds the pin in position. By making half a turn on this screw or coming into the open position it is possible to give the eccentric screw a half turn to bring the block either up to the required distance for a center fire or to the lower position for a rim fire. The change of the under tang and lever has taken place on this particular rifle and Chapter XIII, Volume II, gives a brief account of this work. This illustration shows the correct layout, so it will be an easy matter to copy the idea. You will notice that an extra piece has been welded to the end after it has been bent to form the pistol grip and then the end curled in order to have a knob on the end for a better finger hold. It is an easy matter to bend all Winchester under levers and weld this extra length to the forged end, but on the Stevens actions this cannot be done, for they are made from malleable iron, and if you attempt to bend by heating as for the Winchester, they break off; it is best to let these actions alone unless they can be cut off and an extension welded on the end to the form desired.

Alterations on Martini Action — The next action to be considered in changing from rim fire to center fire is the Martini action for any center-fire cartridge, particularly the .22 Hornet. This action is one of the most simple to change. The operation should be done very gradually, not removing too much metal at one time; and great care should be taken in order that the altered shape of the horns will not pull the block away from the face of the barrel. Should the block be pulled away from the face, a thread should be removed or the shoulder turned off until it makes one turn, to compensate for the distance between barrel and breech block.

A barrel-center testing rod should be made which will just pass through the bore of the barrel. The end is faced off square and on this is placed a film of Prussian blue. Every time a small amount of metal is removed from the horns, the face of the block should be spotted until the correct center is obtained. After bringing the block down so that the firing pin comes in the exact center, a new firing pin must be made from chisel steel with the correct contour on the end, as Figure 144 illustrates.

Springfield .22-Caliber Bolt Stop — When the Springfield Armory designed the .22-caliber rifle they used the Model 1903 receiver for reasons of economy and to give the rifleman the same feel of rifle as with the .30 caliber; it was made possible to change from one to the other without the trouble of becoming accustomed to a different arm. They overlooked one point in the design which could have been included very easily, and that was placing a bolt stop in a position so that it would not be necessary to have the long bolt-throw now required, which allows the bolt to come back and usually hits the shooter on the nose.

To allow only a short throw of the bolt, all that is necessary is to drill down from the top of the receiver on the left side with a $\frac{5}{32}$-inch drill and insert a pin. First draw the bolt back until it has sufficient clearance for the magazine, and drill the hole in such a position that the ejector lug will come against it on its travel to the rear. The pin will come close to the inside walls of the channel and allow correct clearance for the bolt.

The manufacture of a pin for this is a simple lathe operation. A knurled head is made to a diameter convenient for the fingers to grasp when necessary to remove it. On the bottom of the pin a circular groove is turned, as the pin will come on the outside of the magazine. A small spring is fastened to the side of the magazine so that one end will slip into the circular notch, which will cause enough friction to keep the pin from falling out; and when it is necessary to remove it the small amount of friction will not be enough to require any effort. By the use of this pin the cut-off can be removed entirely, for it will never be used again.

Screw Positions — After the constant reference made to screws being placed north and south, it is well for the reader to have a thorough understanding of these terms. The position of a screw slot should always be parallel with the length of a firearm. By way of illustration, if the guard screws in a Springfield rifle are placed crosswise or at an angle of 90 degrees, which would be across the narrow part of the guard's tang, the appearance would be rather conflicting to the eye and better judgment; but if they are placed lengthwise, or have the slots of the screws so placed that they face fore and aft, they will be what we call "north and south."

Many times it is impossible to set screw slots in this position on military arms, but when restocking one of these rifles it can easily be done with all screws, particularly the new screws used on butt plates, pistol-grip caps, etc. By having a full gross of wood screws it is always possible to find some which when set will have the slots in the heads pointing in the desired direction. It may be necessary to try a good many, but there is always one among the lot which will properly tighten the part

in position and still point north and south. If new screws are being made for any particular part it is very easy to fix the position of the slots correctly, for their locations can be marked on the heads, and after the screws have been removed they can be slotted according to these marks and the head finished to the desired thickness.

Many screws require anchoring screws similar to those seen on a Browning Automatic shotgun, on the outside of the action. Whenever such a screw is to be used to hold the main screw, it is well to drill and counterbore this in the position of north and south, except in cases similar to Figure 145. The best location for a Pope eccentric pin would be on the top, for the pin denotes the position of the top or bottom cut-out. Anchoring screws are only applied in certain instances where it is necessary to prevent an essential main screw from turning, as on the military guard screws in single-shot Colt revolvers, etc.

Height of Sight — There is only one satisfactory means by which to secure the correct height of a sight while testing a rifle on the range. You may have made a new ramp and wish to know the correct height for a front sight. To ascertain the accurate height of the sight when attached, first solder on a temporary sight of soft solder, and file it to the shape of a sight. The temporary sight is attached to the tip of the ramp and then filed to the width you think correct; but make it high enough so that it can be dressed down. While on the range, set the rear sight down as low as possible and shoot the rifle; then file down the lead sight until the proper elevation is secured. Windage adjustment may be disregarded in many instances.

After returning from the range, measure with calipers or a micrometer to the bottom of the barrel or ramp band. From this subtract the over-all dimensions of the front sight from top of bead to bottom surface of base. Set the hermaphrodite calipers for the new measurements, and scribe on front end of ramp. This mark should be laid out on both sides of the ramp, the marks on each side representing the depth of the dovetail cut, and measure the thickness of dovetail base of the sight. Scribe a line above the first one made on the sides of the ramp. This gives the top surface of the ramp. Remove the top section and mill out the dovetail slot for the sight. When fitted, the top of the sight bead will be almost the same height as the lead-sight blade. There will be, of course, a little inaccuracy, which may be taken up with the rear aperture-sight adjustment. If it is a leaf sight, set it a trifle lower so that you can file out the leaf upon the second visit to the range.

Various heights of sights may be procured from the manufacturer. The approximate height should be first determined with the lead sight as above described, and then the design selected that is most suitable for the purpose intended. The set-up in a milling machine and the use of a dovetail cutter is the most satisfactory method of setting a sight in a ramp. Of course, the sights which are placed in sideways can be filed in, but the use of a caterpillar sight requires a set-up in the milling machine. The caterpillar sight may be a driving fit in the slot with no other means of holding it in place, or it may be filed off on the sides or bottom to an easy sliding fit, and then a plunger fitted to it as described in Chapter XIX, Volume II.

By carefully following the instructions in this chapter and Chapter XXIII, the student who is just beginning to carry out work of a nature that does not involve a great amount of tool equipment should not encounter very much difficulty. The best way to start is by firing a rifle on the range in order to arouse one's enthusiasm, and then start working on an old arm; not necessarily a worn-out weapon, but one that has possibilities and can be put in order. Form mental pictures of what the arm is capable of, and finish it according to your ideas.

From such a humble start the road to success will be much easier.

CHAPTER XXV

Miscellaneous Formulas and Methods

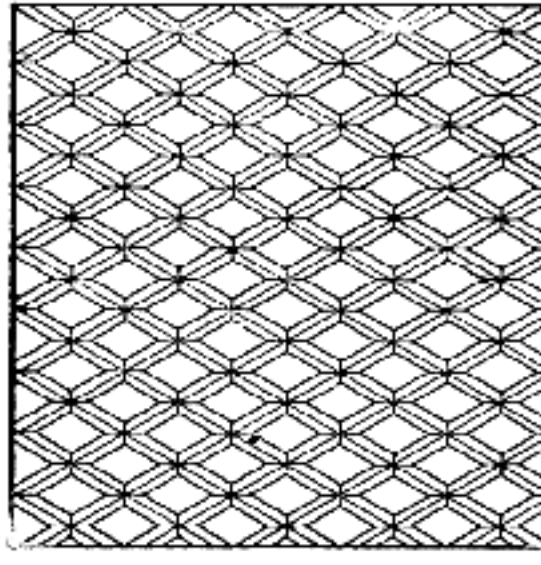

CHAPTER XXV

Miscellaneous Formulas and Methods

THIS chapter is written with the intention of giving the beginner formulas for various oils, solvents, fouling solutions, etc., which are of particular value and interest in gun work. I shall also endeavor to offer suggestions and ideas which will enable the novice (whom I am keeping primarily in mind) to help himself, and at the same time impart to the died-in-the-wool gun crank new points of interest which he has not found elsewhere.

I know that many will immediately anticipate formulas for the mixing of explosives, for I have been asked time and time again for such information through correspondence. When I receive such requests, I am reminded of the old saying: "He therefore took to fulminating powder, like a wife—'for better or for worse,'" and I am of the opinion that such adventures usually lead to "worse."

You will find that gum shellac is a constant friend in time of trouble, for it is one of the best materials to be used in making fillers for various woods. If there are cracks or checks in the material, or if, in stocking, a slip of the tool should occur while letting in a receiver, guard lock, or any other part, a little of the gum judiciously applied often remedies the defect. Like charity, it covers a multitude of sins.

Wood filler or plastic wood is very often prescribed for filling in cracks, checks, etc. However, such advice is erroneously given, for altho this material is satisfactory for filling up pistol grips on revolvers to fit the shooter's hand, it cannot be used successfully for filling in checks and cuts in and around metal parts. The only really effective material is the following:

Gun Maker's Shellac — The amount given in this formula will last a long time:

12	oz.	shellac (seed lac)
4	"	rosin
8	"	alcohol (pure grain spirits)
1	"	turpentine

Place the shellac in a clean receptacle and add the alcohol. While the gum is dissolving, keep it covered to avoid dust or dirt, and let stand in a warm place. If it coagulates in the alcohol, stir frequently so that the alcohol will completely dissolve the lac. In a separate receptacle place the rosin and turpentine and allow the latter to dissolve the former completely. Add these two mixtures together, place over an alcohol lamp or Bunsen burner, and allow the ingredients to mix completely. Care must be taken when boiling, as too much heat may cause the mass to catch fire. The heat may be continued until the mixture reaches the consistency of a heavy paste, then it should be poured into moulds in the form of sticks. These are convenient in handling and applying on the parts requiring shellac.

When blemishes are to be concealed in the wood work or a bad cut-out has been made in stocking a rifle or shotgun (an accident which often happens to both the beginner and the experienced man where receivers, guards, actions, etc., are let in), melt a piece of gum shellac into the place with a warm iron so that it will be well filled. It is also well to warm the wood or steel where the gum is to be applied, to make sure that it will run down and make a good adhesion. Let it remain about ten minutes until it becomes solid, and you will find it difficult to detect the place where it has been used. A proper application requires the eyes of an expert to discover its use in wood work.

Gun Oil — The fact that there are few oils fit for gun work does not seem to be commonly known, for you will find arms coming in for repairs so badly gummed up that only special treatment can get them apart, especially when linseed oil has been used as a lubricant. This is done rarely, but it is surprizing to learn just what oils are used by gun owners.

The finest oil to use is the best quality of sperm oil. This comes in a liquid form and is extracted from the head of the sperm whale. As much as seventy barrels are found in a large whale. This is not only used for lubricating purposes, but on any occasion where an oil that is free from acids is required to hold a body. Any fine animal oil may be used as a substitute, particularly the oil from the jaw of a porpoise. Such oil must be prepared by the clarifying process which I shall describe later. A good oil should never be thinned or "cut" with kerosene, gasoline, benzine, or any

inferior oils, as this reduces its wearing quality. The oil should not thicken with exposure to such cold as we experience in our northern climate.

As a rule, vegetable oils are unfit for any lubricating purposes on firearms. Castor or linseed oil will gum up and bring about extremely unpleasant results. The only vegetable oil which can be used when mixed with sperm oil is pure white coconut oil, and this but sparingly. Olive or "sweet" oil has very often been agitated with common salt, nitric ether, sulfuric acid, and even hydrochloric acid to keep it from becoming rancid. This oil is totally unsatisfactory, for it not only has a bad lubricating quality, but will rust and spoil any gun parts to which it is applied.

The preparation of the most satisfactory gun oil is as follows:

16 oz. pure sperm oil
1 " pure coconut oil.

The coconut oil becomes heavy in cool weather, but during summer heat is in a liquid form. If it is thick, place it over the gas flame or some other form of heat, and warm both oils together. Allow them to simmer between five and ten minutes; the degree of heat should be about 200 degrees Fahrenheit, just enough heat being applied so that the oils will be agitated in the receptacle, without any great amount of odor rising. Turn off the heat and let cool; it will then be ready for the clarifying process.

When you desire to clarify oil, take a block of pure lead and file off about half a pound of shavings with a vixen file or a wood rasp, or better still, if you have a shaper, cut these off in the same manner as you would a piece of steel. Place these lead shavings in a two-quart bottle and then add the oil. In time the impurities will collect on the lead, and the clarified portion may be poured off. During this process let the bottle be exposed to the sun for two or three weeks or even longer. You will notice that the oils have different bodies in the morning before the sun has a chance to effect the entire mass. The top portion must be poured off and filtered through filtering paper. This portion is used for the fine lubrication of locks, etc. The second portion is also filtered and used for coating the inside of rifle and shotgun barrels, and wiping off the exteriors of firearms to protect the metal parts from rust. The congealed or heavier portion on the bottom can be warmed, filtered, and used not only for the inside of barrels, but the outside as well, when the arms are used in a warm or tropical climate. These three oils should be placed in bottles and labeled Nos. 1, 2, and 3, with suitable inscriptions so that they will be known by anyone having occasion to use them.

Gun Grease — All wool in its natural state contains fatty or greasy matter called "suint," secreted by the skin and covering the individual hairs. When this is separated from the wool and refined, it is called "lanolin" and can be purchased at any wholesale drug house. The lanolin is too heavy to use alone for the bores of rifles and shotguns, therefore it must be mixed with "Rust Veto" or "white vaseline," the former made by E. H. Houghton Co., Philadelphia, Pa. A formula which has proved very successful is prepared in the following manner:

1 part anhydrous lanolin
1 " pure white vaseline or 1 part rust veto

Melt the two ingredients together over an alcohol lamp or Bunsen burner until they are thoroughly mixed, and allow to cool.

Lanolin in its natural state also serves to lubricate and make outdoor clothing waterproof. The wool in all garments eventually loses this oil, but an application of lanolin will prevent the fibers of the wool from becoming dry. After an application, it is surprizing how waterproof old wool clothing becomes.

Gun grease is used when it is necessary to place arms in storage for a great length of time. When in a damp climate or near salt water and air, a liberal amount should always be used, especially on arms that are carried on board ship. Rifles should be disassembled and a liberal amount used between the wood and metal to protect the parts from the action of the salt air and water. In the dryer climates, No. 1 gun oil is all that is generally required except when a firearm is placed in storage for a long time. Those who wish a gun grease of a lighter consistency, may add sperm oil to the above formula until the entire mass becomes liquid.

Miscellaneous Lubricants — Various oils are so often mentioned in these pages and are used so extensively in the manufacture of firearms and ammunition, that it is well to have an insight on this subject. The demand today for better automobiles and machinery of all kinds naturally means that their lubricants must be of the best.

Lubricants are derived from minerals, vegetables, and animals. Nearly all the mineral lubricating oils are obtained from petroleum, altho some are derived from shale. Mineral oils are classed commercially as "pale" and "dark." The pale oils are somewhat transparent and tinged with a variety of yellowish and reddish shades; the dark are opaque and either greenish or brownish black. The specific gravity of mineral oil usually varies from about 0.860 to 0.940 and the flashing point from 300 to 600 degrees Fahrenheit. The oils obtained from

petroleum have a much wider range of viscosity than the "fixed oils." The thinnest are more fluid than sperm oil, and the thickest more viscous than castor oil. The shale lubricating oils are of a low viscosity.

Fixed Oils and Fats—Fixed oils are so named because they are not volatile without decomposition. They are obtained from the seeds or fruits of plants and the tissues of animals. All fixed oils become fats at low temperatures, and inversely, all fats become oils at 150 degrees Fahrenheit. The most common lubricants among animal oils are tallow, lard, neat's foot and sperm oil, and among vegetables, olive, rape, and castor oil. Ordinarily animal oils are either colorless or yellow, whereas vegetable oils are various shades of yellow and green. The specific gravity of fixed oils varies from 0.879 to 0.968 at 60 degrees Fahrenheit. Sperm oil has the lowest viscosity and castor oil the highest.

Brown or Thickened Oil—Lubricants of this class are fixed oils (usually rape or cotton-seed) which are artificially thickened by forcing a current of air through the heated oil, a process which increases the density and viscosity. Brown oils mixed with mineral oils are very largely used as lubricants. The mineral oils used for this purpose are usually of rather low viscosity.

Rosin Oil—This oil is obtained from common rosin by distillation, and is not suitable for the lubrication of machinery, but is used to adulterate mineral and other lubricating oils.

Soap and Grease Lubricants—Some mineral oils are thickened artificially by the addition of such a substance as aluminum soap. This increases the viscosity, but its effect diminishes rapidly when the oil is heated. Mineral oils are also thickened with sufficient soap (such as lime, soda or lead soap) to form a grease at ordinary temperatures. These greases may also contain some solid lubricant, such as graphite, talc, etc.

Adulterants—Many of the more expensive oils, such as sperm, olive, and lard, are adulterated with cheaper fixed oils and mineral oils. Cotton-seed is often mixed with lard and olive oils, and sometimes substituted for the latter. The use of adulterants in order to increase the viscosity is usually resorted to in the case of mineral oils. The presence of the adulterants can sometimes be detected by comparatively simple tests. Oils used in gun work must be pure and free from adulterants and acids.

Testing Oils—The quality and proportions of some lubricating oils can be determined approximately, without the use of any special testing apparatus, by the following simple methods. To determine the presence of solid impurities in the oil. kerosene is added to half a tumbler of oil until the whole becomes quite thin. This mixture is then passed through filter paper or ordinary white blotting paper, and after all the oil has passed through, the paper is washed with kerosene. The residue on the paper, if any, will show whether or not the oil had any solid impurities. Impurities may also be roughly detected by smearing a piece of writing paper with oil and holding it against the light. If the oil is free from solid impurities the blot will be equally transparent throughout; otherwise, the solid particles will be visible. The oil must not resinify. To test it this way, pour it into a shallow dish and leave in a warm place about a week. There should not be the slightest crust at the end of that time. Another way to test oil is to mix it with the fumes of nitric acid. If the oil is pure, a thick mass will form in a few hours, while resinifying oil will remain thin.

Acids are very injurious impurities in any oil used for gun work, since they attack the parts lubricated. To test for acids, copper oxid or copper ash is added to the oil in a glass vessel. Acid-free oil retains its original color, while acid-impregnated oil becomes greenish or bluish. Another test is to drop the oil on a sheet of copper or brass and leave it there for a week. If the oil contains acid, there will be a green spot on the metal.

An oil must be greasy in order to have good lubricating qualities. To determine which of several oils is best, place a drop of each kind on a smooth, slightly inclined metal or glass chute. The drop of the best oil will travel farthest in a given time.

Powder Solvent—An erroneous belief exists that it is possible to combine a gun oil with a solvent, making the one do for two operations, and this usually results in a ruined barrel. There are also a great many men who are under the impression that when they use clean-bore ammunition or ammunition with the new non-corrosive primer, their cleaning worries are over. Many come to me with ruined barrels because they have neglected cleaning them. This applies not only to the .22 caliber, but others as well. These men come in with their rifles to have the bores examined, saying, "There is something wrong with that barrel; it doesn't seem to hold the shots on the paper any more, yet I am holding it in the same place all the time." Upon examination, I usually tell the owner that it has not been cleaned since the last time it was fired. Invariably I receive the answer: "Why, it isn't necessary to clean a rifle nowadays. I always use clean-bore ammunition." After running a bronze bristle brush through and cleaning the bore out thoroughly, I discover, of course, that the

barrel is ruined, yet it is difficult to convince the owner, for his faith is strong in clean-bore ammunition, regardless of climatic conditions.

As we know, it is typical of many American manufacturers to advertise products regardless of their merits. Large bill boards confront us at every turn and their talking points become slogans. "Clean-bore ammunition" is one of these. As a consequence those who are susceptible to advertising ballyhoo accept the idea that the disagreeable task of cleaning a firearm is over. This is perfectly all right in a hot dry climate; there a firearm can be forgotten; but in a moist climate such as we have near the Great Lakes, the owners of firearms are often greatly surprized to learn that it is still necessary to use the customary cleaning rod, powder solvent, and gun oil.

The following formula is very good for dissolving powder residue:

100 cc. best grade turpentine
100 cc. pure sperm oil
100 cc. acetone

Mix in order given and place in a glass receptacle with a glass stopper, so that none of the acetone can evaporate. If you wish to color the solvent, place a little alkanet root in the turpentine and allow it to stand for an hour or so until enough of the red color is extracted. If a darker shade of red is required, allow the alkanet root to simmer gently in the turpentine over a gas burner or an alcohol torch. Then strain or filter the turpentine and add it to the sperm oil and acetone. The addition of the alkanet root is not of any material benefit, but adds a rather pleasing color.

After a rifle is fired and before it is put away, it should be cleaned with a powder solvent to dissolve any residue left in the barrel, wiped out perfectly dry, and gun oil applied to protect the interior as well as the exterior. This only requires the use of a chamois or cloth well moistened with the gun oil. Moist hands are as harmful as climatic conditions or residue left in the interior. To use the solvent, saturate a bristle brush and work it back and forth through the bore. Then use clean canton-flannel patches to thoroughly clean and remove all traces of the solvent, for any of this left in the barrel will dissolve oil, and expose the metal to the action of rust through moisture.

Many shotgun barrels are ruined by lack of proper cleaning methods, and many shotgun owners will be surprized to learn what a lot of good is done by swabbing out the barrels with the powder solvent, which removes more residue than they ever dreamed could adhere to the interior. Most owners use a dry rag through both barrels and then place some of this oil on a cloth and push it through, the result being—in a week's time or less—the complete evaporation of the oil with patches of rust showing, which can only be removed by a lapping process. When this happens to a rifle it means a ruined barrel, for it cannot be removed by lapping as in the shotgun.

Metal-Fouling Solution — The gunsmith is often called upon to remove metal fouling from the bores of high-velocity rifles. This requires a special process—a very simple one when understood. Such fouling consists of patches of metal left in a rifle barrel from the jackets of bullets, particularly when bullets having jackets of "cupro-nickel" have been used. This metal is fast disappearing in the manufacture of jacketed bullets in the United States, but in England and Germany they still use the cupro-nickel bullets. The present manufacturers of bullets in this country use a gilding metal or an alloy of copper. Some are made with the pure copper, which is rather a soft material. The gilding metal, as used by the Frankford Arsenal for the manufacture of the National Match ammunition, is a much harder alloy, gives better results in accuracy, and reduces the problem of metal fouling to a minimum.

To determine the presence of metal fouling in the rifle bore, first clean it with the powder solvent and then thoroughly clean and dry the bore by using clean patches. Examine from both the muzzle and chamber ends by holding it in a good light; the presence of metal can be detected in different forms such as long streaks, small flaky spots, or even lumps and smears adhering to the lands and grooves. When any such condition exists it should be removed at once, for it will interfere with accuracy, and if left long enough, rust will develop under these patches and in a short time the barrel will be ruined.

The metal-fouling solution is compounded as follows:

220 gr. ammonium persulfate
100 " ammonium carbonate
90 cc. ammonia (26 to 28%)
60 cc. distilled water

The first two ingredients should be powdered together in a small mortar and then mixed with the last two in a bottle with a rubber cork. Secure a bottle large enough so that when you pour in the two latter ingredients it will only be one-half or two-thirds full, for the solution generates a powerful gas which may blow the cork out or burst the bottle. Keep it in a cool place when not in use. This amount of solution will keep between two and three weeks; after that, it generally loses its

original strength, so that it is far better to mix new as your requirements demand. Always keep the bottle tightly corked when not in use, and leave it uncorked only for a few seconds when pouring out the amount required.

When ready to use the solution, carefully clean the bore of all oil and grease. Then insert a rubber cork in the chamber, and a small piece of rubber hose over the muzzle. A convenient length to use is about 2 inches, making a watertight joint. Stand the rifle in an upright position, with the barrel vertical. A practical method is to rest the muzzle on the floor and clamp the other end in the vise between felt jaws.

Carefully pour the solution through the rubber hose into the muzzle of the rifle until the bore is full and the liquid flush with the end of the barrel, being very careful not to spill any on the outside of the rifle. If this should happen, wipe it dry at once with a cloth well moistened in gun oil. Let the solution remain in the bore between twenty and thirty minutes, but never more than half an hour under any circumstances. When first poured into the bore the liquid is as colorless as water, then little bubbles begin to appear and it assumes a deep blue color as it begins to dissolve the alloy (which is mostly copper) deposited by the bullet jackets. It generally completes the work in fifteen minutes, but the full thirty minutes will remove every trace of fouling.

After the solution has performed its work, reverse the rifle muzzle, and pour out. While in this position, take the rubber hose from the end of the muzzle and insert a cleaning rod to remove the cork from the chamber. Keep the muzzle down all this time so that none of the solution will enter the chamber and mechanism and promote rust. From the chamber end, run a clean dry patch through to remove any trace of the solution left in the bore. Then place the rifle in a vise and run a number of patches through to remove the last remnant of the mixture before it has had time to evaporate on the steel. The best method for this operation is to take a cleaning tube and funnel, pour hot water through from the breech, and then thoroughly dry the bore with clean canton-flannel patches. Look through the bore to see if it is perfectly clean and free from metal fouling. If it is perfect, give it a thorough swabbing and coat with No. 3 gun oil. This will protect as well as clean. If you wish to store it for a long time, use the gun grease.

If, however, some fouling still remains in the bore, run a clean bronze bristle brush through several times, being careful that the brush and rod are free from oil or grease, and apply fresh solution in the manner described above. Usually one application is sufficient, but in bad cases, two or even three applications are necessary.

As long as the ammonia retains its strength and the steel remains wet, it has no action on the steel. If, however, it is allowed to evaporate, the steel will rust very quickly; or if the solution is permitted to stand for a long time exposed to the air, the carbonate adds to the strength of the ammonia which will evaporate, and the remaining solution will rust steel very quickly. Therefore, take precautions to keep the bottle tightly corked, do not spill any of the liquid over the rifle or in the mechanism, and place a rubber tube over the muzzle so none will evaporate on the steel at the end of the barrel. The solution will remove any finish on the stock if spilled while using it, so it is well to wrap a piece of cloth around the forearm while doing this. Never pour the solution into a barrel that is still warm after firing, for such an application may completely ruin the barrel in a few seconds; always allow the barrel to cool first.

A well-made barrel should never pick up any metal from the bullet jackets. Usually this condition is caused by small grooves left by the reamers and rifling cutter, so minute that the eye is unable to detect them. If you have such a barrel and the metal fouling must be removed often, it is convenient to have a small measuring glass graduated so that you will know just the amount to use each time to fill the bore completely, thus obviating the danger of spilling by overflowing. It also makes pouring easier and quicker. In the absence of a mortar and pestle, the persulfate and carbonate may be powdered by placing in a clean cloth and pounding with a hammer.

The presence of oil or grease will saponify the ammonia solution and prevent its dissolving the metal fouling. When used exactly as described, this standard metal-fouling solution is perfectly safe and very effective.

Sulfur Casts — Sulfur casts are often necessary as a means of measuring accurately the chamber of a rifle or the chamber and cone of a shotgun. Originally pure sulfur was used, but we discovered at the Arsenal that this shrunk between .001 and .002 inch, making it unsuitable for this purpose. After experimenting with various substances in an effort to find a cast that would not shrink materially, the following formula was compounded:

4 oz. sulfur
10 gr. powdered lampblack
1 tsp. gum camphor dissolved in alcohol

Heat the ingredients very slowly in a small ladle over a Bunsen burner, stirring constantly. When

the mixture arrives at a thin pouring consistency, it is ready to pour.

First prepare the chamber by a thorough cleaning and then by giving it a film of very light oil. This can best be done by slightly moistening a piece of cloth on the end of a stick or rod. A cork the size of the bore is selected and a piece of wire about 1/16-inch diameter—a little longer than the chamber—is inserted into the center. A ladies' hat pin is very convenient, or any wire of the same diameter. The wire is used as a reinforcement for the cast. Press the wire and cork into the bore about one-half inch ahead of the chamber, so it is possible to show a part of the rifling, or, on a shotgun, the cone.

With the rifle or shotgun barrels clamped between felt jaws in the vise, muzzle downward, pour the mixture into the chamber quickly and allow it to cool before removing the cast. To remove the cast, insert a cleaning rod into the muzzle and push lightly against the cork, and as it comes out, hold the cast by the end of the wire, which acts as a handle. You may now measure the cast, and you will find that such a mixture will give a fine and glossy appearance that can be measured at every point. However, it should be handled very carefully as it is extremely brittle. It is imperative that the mixture be heated very slowly, for otherwise it will become too thick to pour. The quantity given is more than required for one cast, but this can be reheated for others as needed.

Patterns — The gunsmith's work often demands the use of various patterns, such as those for aluminum and brass butt plates, adjustable and Schützen heel plates, pistol-grip caps, various accessories for the target shooter, etc. For this reason the student should be thoroughly familiar with this branch of study, for he can then take care of his individual requirements, and save much time by eliminating the necessity of going to a pattern shop where they usually demand a detailed drawing of each part. After your pattern is finished, give it to the foundry and they will make castings of it at a small expense.

Woods commonly used for patterns are white pine, mahogany, cherry, maple, birch, whitewood, and fir. For most of the larger patterns, white pine is considered the best, not only because it is easily worked, but because it readily takes glue and varnish, and is fairly durable for most gun parts. For medium and small-size patterns, especially when they are to be used often, a hard wood is preferable. Mahogany is often used for patterns of this class; cherry can be used, and so can scrap walnut. As mahogany has a close grain, it is not as susceptible to atmospheric changes as a wood of coarser grain. If you are using cherry, never select green timber; maple and birch are preferable, especially for turned parts, for these woods take a good finish. It is very important that the wood selected be well seasoned; that is, it should be kiln-dried or kept one or two years before using, the time depending upon the size of the wood.

Patterns intended for repeated use are varnished as a protection against moisture, especially when in the damp moulding sand. (See Shellac Varnish.) The varnish used should dry quickly and have a smooth surface that draws readily from the sand. At least three coats should be applied to a pattern, the surfaces being rubbed down with fine sandpaper after applying the preliminary coats in order to obtain a smooth surface.

Glue for Patterns — There are many qualities of glue, both in the liquid, sheet, and pulverized form. (See Glue.) Whenever practicable, glued joints should be reinforced by nails or screws. A joint to be glued should be accurately fitted, because glue does not get a grip unless the parts are in close contact. If the end grain must be glued, first apply a sizing coat to fill the openings among the fibers. After the sizing coat is dry, apply the second coat to the surface and unite. If the preliminary coat is not applied, the open-end grain is apt to absorb the glue so rapidly as to weaken the joint. (This is also true in stock work.) The hot glue should be thin enough to spread easily. However, it can be thicker for pine than for the woods of a closer grain such as mahogany or walnut, because, aside from the quality of the glue, the holding or binding property depends upon the extent to which the glue enters the pores of the wood. All glued joints should be firmly pressed together with clamps immediately after the application. They should be given plenty of time in which to harden; between 20 and 24 hours in a dry place should be sufficient.

Shrinkage — The shrinkage allowance ordinarily made on patterns to compensate for the contraction of castings in cooling are as follows:

Cast-iron	3/32 to 1/8 inch per foot
Common brass	3/16 inch per foot
Yellow brass	7/32 " " "
Bronze	5/32 " " "
Aluminum	7/32 " " "
Steel casting	3/16 " " "

The amount of shrinkage depends to some extent upon the shape and size of the casting. A plain casting that is long in proportion to its width will contract differently from one that is more compact, even tho both castings are of the same material. The pattern maker's shrinkage rule has graduations which are longer than the standard

measurements, to give the allowance directly. This device is hardly necessary for small parts in gun work.

Draft for Patterns — The draft or the amount of taper given to a pattern to facilitate withdrawing it from the mould depends somewhat upon the size and shape of the pattern. A general rule is to taper each side 1/8 inch for each foot of surface to be drawn. The average amount for small patterns is about 1/16 inch per foot, altho in some cases, as on pistol-grip caps or thin butt plates, it can be less. As a rule, however, there should be 1/32 inch draft. The draft shapes away from the pattern's "face," which is usually uppermost in the mould when the pattern is drawn. Some patterns do not require draft because none of the surfaces are at right angles to the face, and very small patterns are made without draft.

Allowance for Finish — It is seldom that it is necessary to allow much for shrinkage on gun parts for a finishing job, as most of the pieces are polished and buffed. The amount added, therefore, to a pattern to allow for machining the casting varies greatly, depending upon the method of machining, the size of the casting, and the importance of having a clean surface free from flaws or defective spots. If castings are to be finished from the rough upon a disc grinder or polisher, very little allowance is sufficient; in fact the moulder can warp a pattern with allowance enough to allow for the finish.

Glue — The most commonly used glues in the shop are animal, casein, and cold liquid glues; each possesses properties which make it invaluable for certain purposes. Animal glue possesses strength, casein glue is the most water-resisting, and cold liquid glue is always prepared for immediate use.

Glue can be successfully heated only by means of a water-jacketed pot. The action of dry heat or direct steam is never recommended, for such methods usually result in overheating the glue. A good glue pot may be purchased very reasonably; it has a jacket, is electrically heated, and is made on the same principle as a fireless cooker. An automatic switch controls the amount of current, so that the proper temperature is maintained at all times.

If you cannot procure a glue pot of this kind, you can purchase an ordinary enamel double boiler at the hardware store, or place any smaller vessel in a larger pan of water. Vessels made of copper, aluminum, or with a porcelain lining are the most satisfactory for the use of animal glue, as they resist its acid action. For the best results, the inner pot should be covered while the glue is being heated, to prevent the evaporation of the water and to keep the glue clean.

Glue comes in either the flake or powdered form. The only advantage of ground glue is that it need not be soaked so long. The amount of glue to be prepared depends upon the amount of gluing to be done. I would advise mixing only the quantity needed, since reheating reduces the strength, and the evaporation of water makes the solution too thick. Five ounces of dry glue mixed with 2½ parts of water by weight make a pint of liquid, and this is sufficient for covering 8 to 10 square feet of surface. Larger or smaller quantities of dry glue will give proportional amounts of liquid.

The proper way to measure dry glue is to weigh it. No other method for the proportion of glue and water is as good or as accurate as weighing. Mixing glue according to dry measures, such as scoops, quart measures, buckets, etc., is not dependable, since flake glues may vary 100 per cent in bulk weight and ground glue 25 per cent.

Always soak glue in clean cold water before heating. Soaking in cold water gets the glue into proper condition to dissolve readily when heated. Soaking in warm water will not give satisfactory results. Soft water should be used, since the chemicals of hard water may injure the glue. The proportional amount of water necessary for soaking animal glue is determined by the grade of glue and the manufacturer, and weigh it for accurate results. 1¼ to 2½ parts of water by weight to one part glue. Use the amount of water recommended by the work for which it is to be used—never vary.

It is advisable to add the glue to the water in small amounts and stir thoroughly until all is uniformly mixed. This is especially important when mixing ground glue. It keeps the glue from collecting in balls and thoroughly mixes it with the water. Use only clean containers for soaking the glue. The time for soaking glue depends on the form. Ground glue will dissolve in from thirty minutes to four hours, according to the fineness of the powder. It is necessary to soak flake glues from one to twelve hours according to the thickness of the chips.

In melting the glue, temperatures higher than 150 degrees Fahrenheit will destroy the strength of the glue. By all means, do not allow glue to boil. The electric glue pot will keep the glue at the right temperature, but if only a double boiler is available, test the temperature with a thermometer. A minimum of 120 degrees Fahrenheit for glue is also essential. The binding strength of glue depends upon its penetration of the wood. Glue below 120 degrees Fahrenheit will not penetrate, since the body of the solution is too heavy for per-

fect fluidity. Therefore, underheating glue is to be avoided as much as overheating.

In applying glue, be careful not to use too thick a solution. Glue must be thin to penetrate, and penetration is absolutely necessary for a successful joining. Fresh glue properly proportioned by weight and heated to the right temperature will have the right consistency. It will be well for the beginner to examine such glue carefully in order to see that it is all right in this respect. The continual heating of glue tends to make the solution thicker. It should always run from the brush in a thin stream and spread with ease. The thinning of melted glue with water impairs its strength, but the strength of a joint made with glue of the proper consistency is greater than one made with a solution that is too thick.

For stock work it will be best to use raw linseed oil instead of water. It requires longer to set, but is as perfect a waterproof glue as can be made. Instead of soaking the glue in water as recommended, have a vessel set aside containing linseed oil and glue. This can be used as the supply becomes low in the cooker.

Gun Maker's Glue—Dissolve four ounces of good animal-hide glue in sixteen ounces of strong acetic acid, by exposure to a gentle heat. This is not exactly a liquid glue preparation—it is only semi-liquid. It may be kept for any length of time desired, and when needed for use, a slight warming is all the preparation necessary. The student will find this very handy for his work and also very convenient in case he should have occasion to use glue that does not require a strong joint in the work. This preparation is one of the best, and thus prepared you are assured that the ingredients are of proper material.

Shellac Varnish — This is used for a number of purposes, not only on stock work, but in the finishing of patterns, tool blocks, the tops of benches, etc. To make the varnish, place the shellac in a clean receptacle, covering it with pure grain alcohol. When it is to be used for stocks or patterns, bench tops, blanks, etc., wood alcohol may be used. When preparing this, enough alcohol should be used to cover the shellac completely. After it is fully dissolved and is still too thick, more alcohol can be added to thin it down to the required consistency. Too much warmth will tend to evaporate the alcohol, and for this reason it should be well-nigh sealed from the air. It may take one or two days for the alcohol thoroughly to dissolve the shellac; this depends upon the temperature in which it is placed. When the gum is dissolved, thin with alcohol to the proper consistency, and for easy application use a brush. If the mixture should be dirty, filter it through filtering paper to remove all foreign substances.

Colored shellac is often desirable. The color of the varnish is commonly changed and various substances may be added. Lampblack is used for a black shellac; a red varnish can be made by adding Chinese vermilion, etc. (See "Where Colors Come From.") All coloring powders should be well pulverized before adding them to the varnish.

Steaming Woods for Bending — An erroneous belief exists among many men that a rifle or shotgun stock can be made as pliable as a piece of putty, to secure any drop, bend, or cast-off, by just steaming it in a steam box. My advice is never to try it, even as an experiment, unless you want a ruined stock. Take a shotgun as an example; a little common sense will tell you that with all the cut-outs for the action, it would be an impossibility to perform this operation; for when the steam begins to penetrate, the walnut will warp in all directions and the cut-outs will expand so much that the action will never go back in place. Furthermore, the knots, or burls, or even crotch wood that the stock contains would all open up to such an extent that you would be able to insert a knife blade in the wood to the depth of half an inch or more. Such openings would run from one to three inches, and in some cases longer, irreparably disfiguring the stock.

The only satisfactory way to change the bend in a stock, in either rifle or shotgun, is to apply hot raw linseed oil to the grip, which will make it possible to bend the wood slightly in any direction, at times as much as one-half inch. After wrapping a number of pieces of cloth around the grip well back from the action, pour hot linseed oil over these and allow to stand between a half and one hour. Then grip the butt end of the stock and twist or bend to any shape you may desire. The best time to do this is late in the afternoon before going home. There are two reasons for this: heating the oil over the gas flame, particularly when it comes to the boiling point, produces an odor; and after the bending operation it is much better to let the stock stand over night. Remove the oil-soaked cloths the next morning, completely disassemble the action, and clean out any linseed oil that has run into the mechanism.

I find that men who live near a body of water and are familiar with the handling of woods use this method for bending and twisting timbers in boat building. Perhaps the following information regarding a steam box will not be amiss.

Long or short strips, and even planks, can be

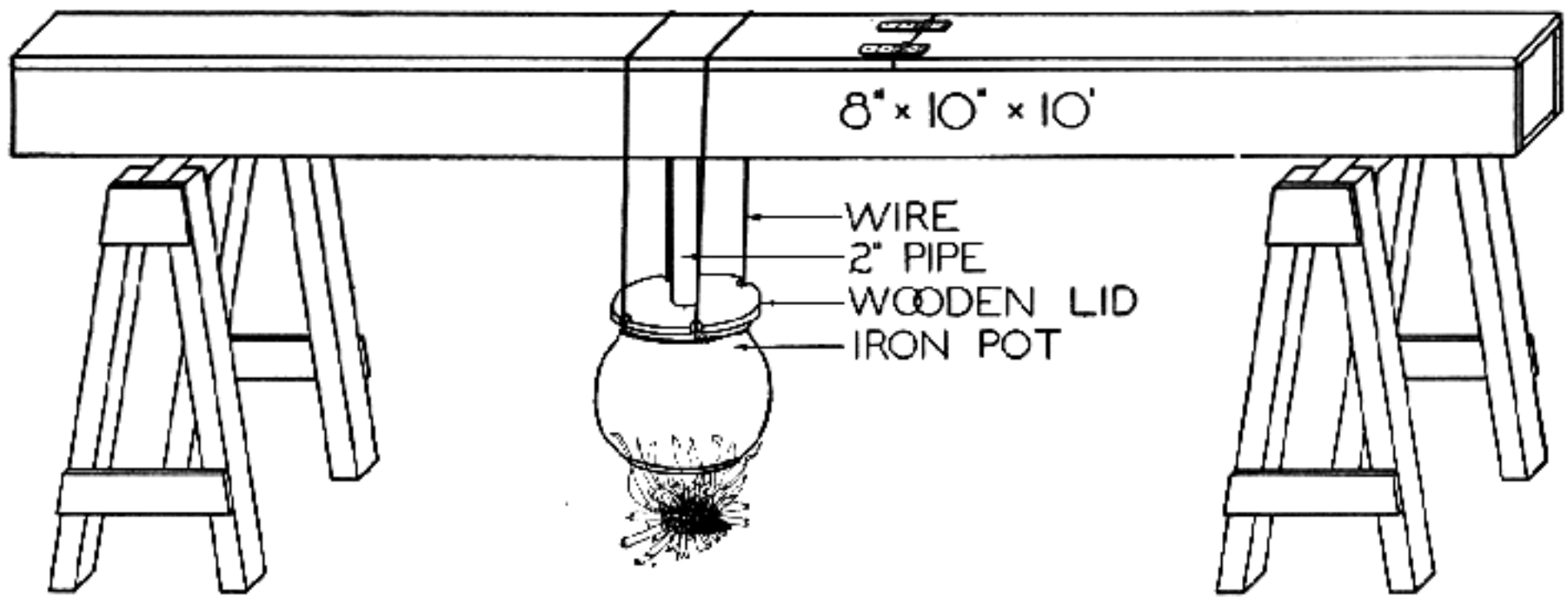

Fig. 146
Home-made steam box

made pliable by steaming them from one-half to one hour in a cheaply constructed steam box such as Figure 146 illustrates. The size of the box will naturally depend on the work you intend to do. Boxes all the way to 35 feet in length by 3 feet square have been made for bending planks in boat building. For ordinary work, however, a box 10 to 12 inches square by 8 to 12 feet in length will be ample for the student who is interested in small boats or other work of a nature that includes the bending of wood.

The box is made of inch boards, nailed together with tenpenny nails, about 6 to 8 inches apart, with one end closed permanently and the other end either furnished with a hinged lid and two side catches, or left open entirely. When the latter scheme is resorted to, an old piece of carpet, burlap, or lid can be used to close up the end. Even when the hinged lid is used, it is well to use a piece of burlap.

An ample sized pot with a wooden lid made to fit the opening tightly is also needed. A hole is cut in the center of the bottom of the steam box with a compass saw, large enough to take a piece of pipe 1½ to 2 inches in diameter. The pipe must fit very tightly and be of sufficient length to prevent the box from coming too near the fire—say four feet from the ground.

The kettle is suspended from the middle of the box by means of a strong wire or chain over the fire. The wooden lid is furnished with an opening for a funnel to supply the kettle with water, but the opening is closed with a tight-fitting cork when the funnel is not used. The box is generally placed upon a couple of trestles or horses outside the shop, but within convenient reach. Charcoal or any material that makes a good fire may be used under the kettle to generate the steam. Altho this information may seem a bit superfluous in a book of this nature, the young man who is interested in all classes of sports and aspires to carry out different ideas will find this particularly remunerative, but *do not try it in gun stocks.*

Loose Wood Screws — Very often wood screws pull out, especially those used in the end grain of the wood. Whenever this happens, I usually bore out the hole to a much larger size, make a wooden plug of a harder variety, glue it in place, allow it to stand for 24 hours, and then refit the screw. However, this is sometimes impractical, especially when one is in a hurry. Then the most convenient method of making a loose screw hold is to use a piece of fine lead wire. Wind this around the threads of the screw, thus increasing the diameter of the threaded part, and screw it back in place. Such a simple operation often saves the plugging of the hole.

Testing Iron and Steel — A very satisfactory chart was worked out at Purdue University to test steel by the spark method on an ordinary emery wheel. But in using this method when in doubt about a certain piece of steel that had not been marked in the shop, I have often been fooled in the alloy steels, by the sparks. Cold-drawn and especially machinery steel will produce a dull spark, and if the carbon contents are rather high in the cold-drawn steel you can always detect this, and consequently discover what you have. Carbon tool steel can never be mistaken, because it gives off a dull continuous red glow without the presence of the bursting sparks which emanate from other steels. Nor can high-speed steel be mistaken, for it has only a dull short length of spark similar to the alloy steels, only one-half inch or more in length from the test piece, whereas the alloy steels lengthen out the dull sparks at times more than three inches. The wise student will secure five samples of the steels I have named and have them marked. Touch each one to the face of an emery wheel and note the sparks. When once seen, they

will never be forgotten. If, however, you are in doubt, take small pieces and harden them by the different methods which have been described in previous chapters.

Home-made Drill Press — Three machine tools are almost indispensable in the tool equipment: the lathe, the drill press, and the grinder. Next to the lathe in importance comes the drill press, and while the latter does not cost nearly as much as the former, its price is sufficient to make a large dent in the student's purse. However, it is possible to construct a press which will answer the purpose for many simple jobs. This is the method I employed when I found the need of a small drill press. You will be surprized to know what a number of drilling jobs a press made from a cheap breast drill will be able to perform.

The frame and table were made from wood and built against the wall in the cellar. First, I constructed the table from a piece of maple, 1 x 15 x 18 inches, and fastened to a 2 x 8 inch with two braces on each side. On the back of this I bored a 1-inch hole to allow the wire to go through for operating the head. A piece 1½ x 6 x 8 inches grooved on each side was made for the head to slide on. Then a head was made with gibs so that it was possible to slide it up and down. Next, suitable brackets were made from 5/16 x ¾ inch cold drawn steel to be clamped to the breast drill at the bottom and top, and at the same time fastened to the movable head which stood away just 12 inches from the wall. Two hooks were screwed in the head; one at the top and one at the bottom. The top hook has a very heavy compression door spring connected to the head and then fastened to the ceiling, a device which always held the head to the top. On the bottom hook a wire was attached, and fastened to a hinged board which acted as a foot feed or treadle, so that when using the drill it was possible to apply the required pressure while revolving it by hand. The face plate, made as large as 18 inches out from the head, allows for the largest work you may have. All parts should be square and level. The drill-press breast drill and all can be made for about three dollars, and the results will more than pay for it. Figure 147 illustrates one of these.

Where Colors Come From — The cochineal insects furnish a great number of the very fine colors; among them are the gorgeous carmine, crimson, scarlet, and purple lac.

The cuttlefish provides sepia, an inky fluid which the fish discharges when attacked, in order to render the water opaque.

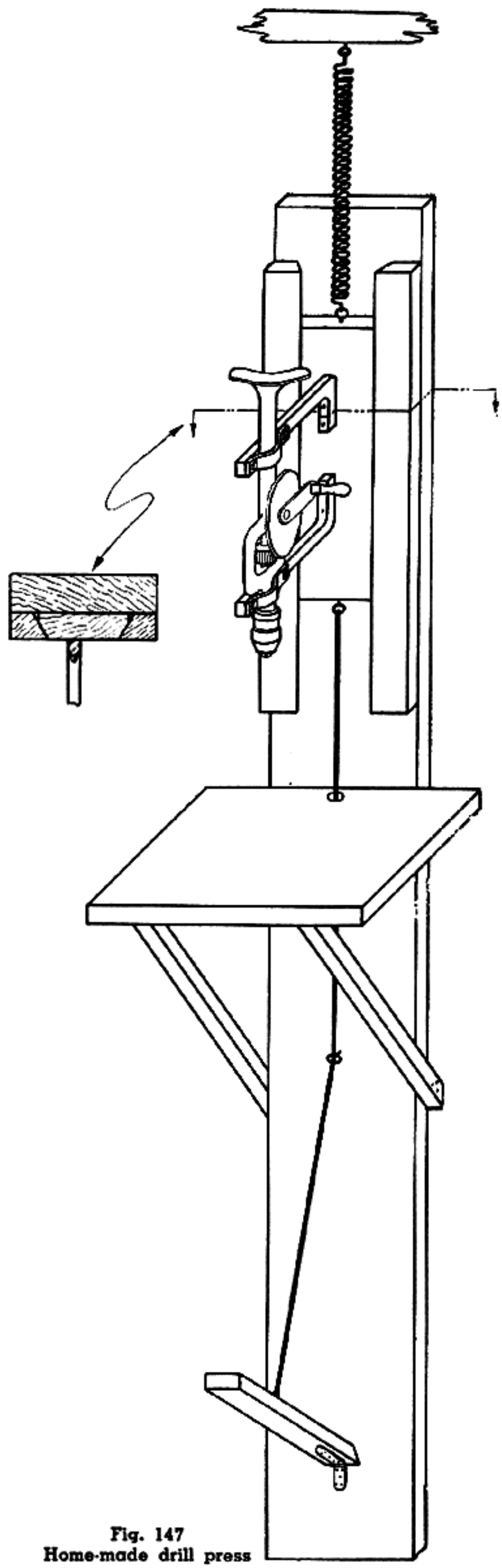

Fig. 147
Home-made drill press

India yellow comes from the camel.

Ivory chips produce the ivory and bone black.

The exquisite Prussian blue is made by fusing horses' hoofs and other refuse animal matter with impure potassium carbonate. (This color was discovered accidentally.)

Various lakes are derived from roots, barks, and gums.

Blue-black comes from the charcoal of the vine stalk.

Lampblack is soot from certain resinous substances.

Turkey red is made from a plant which grows in Hindustan.

The yellow sap of a tree in Siam produces gamboge. (The natives catch the sap in coconut shells.)

Raw sienna is the natural earth from the neighborhood of Siena, Italy.

Raw umber is also an earth found in Umbria, Italy, and burned.

India ink is made from burned camphor. (The Chinese are the only manufacturers of this ink and they will not reveal its secret.)

Mastic is made from the gum of the mastic tree, which grows in the Grecian Archipelago.

Bistre is the soot of wood ashes.

Useful Information — To find the circumference of a circle multiply the diameter by 3.1416.

To find the diameter of a circle multiply the circumference by .31831.

To find the area of a circle multiply the square of the diameter by .7854.

The area of a rectangle is the length multiplied by the breadth.

Doubling the diameter of a circle increases its area four times.

To find the area of a triangle multiply the base by ½ the perpendicular height.

To find the surface of a ball multiply the square of the diameter by 3.1416.

To find the side of an inscribed square multiply the diameter by 0.7071, or multiply the circumference by 0.2251, or divide the circumference by 4.428.

To find the side of a square that shall be equal to a given circle, multiply the diameter by .8862.

Square: a side multiplied by 1.4142 equals the diameter of its circumscribing circle.

A side multiplied by 4.443 equals the circumference of its circumscribing circle.

A side multiplied by 1.128 equals the diameter of an equal circle.

A side multiplied by 3.547 equals the circumference of an equal circle.

Square inches multiplied by 1.273 equals the circle inches of an equal circle.

To find the cubic inches in a ball multiply the cube of diameter by .5236.

To find the cubic contents of a cone, multiply the area of the base by ⅓ the altitude.

Doubling the diameter of a pipe increases its capacity four times.

A gallon of water (U. S. standard) weighs 8⅓ lbs. and contains 231 cubic inches.

CHAPTER XXVI

Soldering, Brazing, and Welding

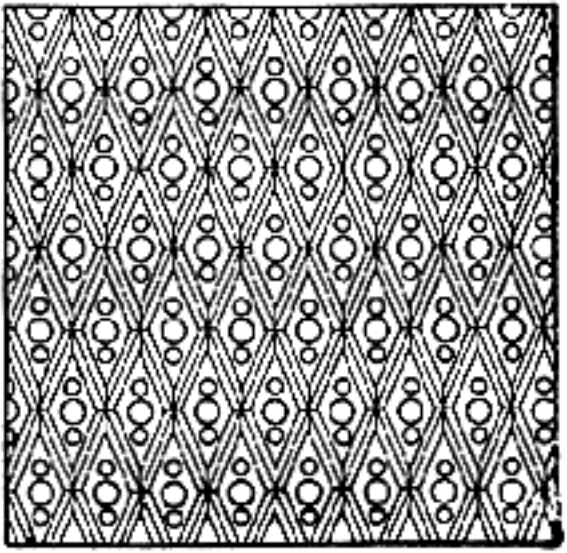

CHAPTER XXVI

Soldering, Brazing, and Welding

IF ONE has any knowledge of joining metals together, he will find soldering, brazing, and welding very simple operations. Soldering is the method of joining metals by means of lead and tin mixed in a given proportion. Brazing involves a higher heat and the use of different materials. Welding is the most difficult of the three, requiring at least three weeks' practise before any degree of success is attained; soldering and brazing can be mastered in one week. This is due to the ease with which softer metals adhere to steel, iron, brass, copper, etc., when the proper fluxes are used.

Soldering — Solders for joining metallic surfaces or edges are almost invariably composed of an alloy of two or more metals. The solder used must have a lower melting point than the metals to be joined by it, but the fusing point should approach as nearly as possible that of the metals to be joined, so that a more tenacious joint is effected. Solders may be divided into two general classes, hard and soft; the former fuses at a red heat, the latter at a comparatively low temperature. These solders are also subdivided into a variety of classes such as brass, silver, gold, copper, tin, plumber's solder and others—the name in most cases designating the application.

Almost everyone thinks he can solder, yet if we examine the work carefully we find that only about ten per cent of the work is done as it should be. Tho soldering is referred to as sweating, there is a remarkable difference in strength between a well-fitted and sweated union of the metals and one ordinarily soldered. An important point frequently overlooked is properly cleaning the surfaces to be joined, an operation too often left for the flux to correct. The after effects resulting from improper cleaning before soldering are far worse than the good effects of the soldering. This is particularly noticeable in gun work. Another neglected point is the selection of the flux to be used, altho nearly all metals can be joined by the use of the same flux. For strength, fit the parts accurately. The more accurate the fitting, the stronger the union. Use a solder with as high a melting point as possible. Apply the proper heat. The nearer the temperature of the work to be joined is brought to the fusing point of the solder, the better will be the union, since the solder will then flow more readily.

Fluxes — The action and use of a flux in soldering is to remove and prevent the formation of an oxid during the operation of soldering, and to allow the solder to flow readily and to unite more firmly with the surfaces to be joined. There are on the market a number of fluxes or soldering salts that are giving good satisfaction. A salts that is very popular with gunmakers is the No-ko-rode Soldering Salts. All that is necessary is to make a saturated solution of the salts in water, and apply with a soldering brush.

For sheet tin, on the best work, rosin or colophony is used, but, owing to the ease of applying and rapidity of work, zinc chlorid or acid is more generally used. Beeswax can also be used and almost any of the pastes, fats or liquids prepared for that purpose.

For lead, a flux of oil and rosin in equal parts of the liquids works very well. Tallow is also a good flux. Rosin and colophony are much used, and zinc chlorid will keep the surfaces in good condition. Lead burning is a different operation from soldering, and at the present time almost a lost art. The surfaces must be bright and free from oxid. Solder is not used as a flux but a piece of lead with rosin and oil.

The following is a list of fluxes to be used:

Hydrochloric or Muriatic Acid—The ordinary commercial acid is much used in full strength or slightly diluted to solder zinc, particularly where the zinc is old or covered with an oxid.

Rosin or Colophony, Powdered—Commonly used for copper, tin and lead; very generally used by canneries and packing houses on account of its non-poisonous qualities. It is also used mixed with common olive oil.

Turpentine—This can also be used as a flux.

Tallow—Is also used for lead pipe but is more frequently mixed with rosin.

Beeswax—Is good and can be used often in place of other fluxes.

Palm or Cocoa Oil—Will work well, but is most generally used in the manufacture of tin plate. The

common green olive oil works very well with the more fusible solders as expedients. We can use a piece of common stearin candle, common brown rosin, or soap, or cheap furniture varnish largely composed of rosin. Paraffin, vaseline, and stearin are recommended for use with some of the alloys for soldering aluminum.

Chlorid of zinc acid, or soldering liquid—Most commonly used of all fluxes; usually prepared simply by dissolving as much scrap zinc in the ordinary commercial hydrochloric acid as it will take up. But if it is diluted with an equal quantity of water and a small quantity of sal ammoniac is added it works much better and is less likely to rust the articles soldered. If they are of iron or steel, about two ounces to the pint of solution is about the proper quantity of powdered sal ammoniac to add. In preparing this solution, a glass or porcelain vessel should be used; owing to the corrosive fumes, it should be done in a well ventilated place. Use a vessel of ample capacity, for there is a considerable foaming or boiling of the mixture.

Soldering Liquid I—Non-corrosive. Prepared by dissolving the zinc in the acid as above and adding one-fourth of the quantity of aqua ammonia to neutralize the acid; the diluting is done with an equal amount of water.

Soldering Liquid II—Neither corrosive nor poisonous. Dissolve 1½ parts glycerin in 12 parts water and add 1½ parts lactic acid.

Soldering Paste—When a solutoin of chlorid is mixed with starch paste, a syrup liquid is formed which makes a flux for soldering.

A very good acid mixture for cleaning work to be soldered is equal parts nitric and sulfuric acid and water. *Never pour the water into the acid!*

A very good job of soldering can be done on work that will permit it, by carefully fitting the parts, laying a piece of tin foil covered on both sides with a flux between the parts to be joined, clamping together, and heating until the foil is melted. This is very good for joining broken parts of brass and bronze work. If they fit well together, they can frequently be joined in this manner so that the joint is very strong and almost imperceptible.

A solution of copper for copper-plating steel or cast-iron before soldering will work by simply immersing the work in it. This is also useful for coppering the flutes of reamers before stoning, also on the surface of dies, templets, and tools for laying out. Scribe the lines so they can readily take—copper sulfate 3½ ounces, sulfuric acid 3½ ounces, water 1 gallon. Dissolve the copper sulfate in the water and add the acid.

The best solder for gun work such as soldering ramps, rear-sight bases, sling-swivel bases, etc., is 75 per cent lead and 25 per cent tin which has a melting point of 482 degrees Fahrenheit. We cannot apply a low-melting solder to gun work because of the heat the rifle or shotgun may be subject to, as in Africa or any other parts of the world where the heat becomes so terrific that parts may be melted off firearms, making them useless.

The soldering copper for the beginner's use should be about 1½ pounds in weight. The length should be 2½ to 3 inches of an octagon form with a square pyramidal point. It is fixed to an iron rod about 8 inches long, on the end of which is a wooden file handle. When heating the copper for use, the best way to ascertain the proper heat is to hold it near the face; if a bright warm glow is felt, it is hot enough. If heated too much, the tinning will be burned off and it will not work satisfactorily. To replace the tinning, heat it just warm enough to melt the solder and file the surface bright and smooth. Then dip in No-ko-rode Soldering Salts, and reheat and redip into the solution very quickly and apply or rub the solder on the bright surface until it is well coated all over. Wipe off with a tag; it is now ready to use for any soldering. With an electric soldering iron there is not a great amount of danger in burning off the tinning, except when forgotten and left on too long. When necessary to retin, follow out the instructions given for the copper soldering iron.

Soft Solders — Soft solders consist chiefly of lead and tin, altho other metals are occasionally added to lower the melting point. Lead-tin alloys melt at a lower temperature, with the increase in the percentage of tin up to a certain point, but when the tin exceeds 67 per cent, the melting point rises gradually to the melting point of lead, as shown in this table.

Tin	Lead	Melting Temperature (Degrees Fahrenheit)
0	100	618
10	90	577
20	30	532
30	70	491
40	60	446
50	50	401
60	40	368
66	34	356
70	30	365
80	20	388
90	10	419
100	0	466

Soft solders are termed "common," "medium," and "fine," according to the tin contents. Those containing the most lead are the cheapest and have the highest melting temperatures. Fine solder is largely used for soldering britannia metal, brass,

and tin-plate articles. It is also used for soldering cast-iron, steel, copper, and many alloys. The soft solder called "common" is used by plumbers for ordinary work; this solder contains two parts lead to one part tin. The best soft solders are made from pure lead and pure tin and used altogether by the gunsmith, altho 30 parts tin and 70 parts lead is preferable on most barrel work. Solder which comes in the wire is the best to use, for the reason that it is possible to get it into places where a large bar of solder could not enter.

Hard Soldering and Brazing — Hard solder is used for joining such metals as copper, silver, and gold, and alloys such as brass, German silver, gun parts, etc., which require a strong joint and often a solder the color of which is near that of the metal to be joined. The hard soldering of copper, iron, brass, etc., is generally known as brazing and the solder as spelter. The operations of hard soldering and brazing are identical, and the two terms are often used interchangeably. There is a distinction, however. Brazing is generally understood to mean the joining of metals by a film of brass, whereas hard soldering (which is the term used by jewelers) ordinarily means that "silver solder" is used as the uniting medium.

For hard soldering or brazing a red heat is necessary, and borax is used as a flux to protect the metal from oxidization and to dissolve the oxids formed. Heating cannot be done with a soldering iron, but should be effected by a blow pipe, blow torch, gas forge, or a coke or charcoal fire. As a greater degree of heat is required to melt spelter than soft solder, brazed work will withstand more heat without breaking or weakening than that soldered. The chief advantage of a brazed joint, however, lies in its superior strength. Before work is assembled for brazing, it should be carefully cleaned and the parts fastened together in the position they are to occupy and joined. Usually the pieces are secured by clamps or fixtures, but sometimes wire is used for holding the parts together. Whenever practicable, they should be secured in such a way that the work can be turned over during the process of brazing without disturbing the relation of the parts, thus affording a better chance to apply the flux and spelter.

Sweating — When parts are soldered together by heating them sufficiently to melt the solder instead of using a soldering iron, the operation is often known as sweating. Ramps and sight bases are usually sweated together prior to machining in order to secure them to the barrel in perfect alinement. The finished surfaces forming the joint between the bases and the barrel are first tinned or covered with solder. This is done by heating the barrel and bases enough to melt the solder; apply a flux (such as No-ko-rode Soldering Salts) and finally the solder. After tinning, the bases are held to the barrel by clamps and again heated until a perfect union is had. Too long exposure to the heat after the solder is melted would spoil the joints.

The equipment used for this operation may be an acetylene torch, blow torch, or Bunsen burner, the latter being the best. Of course, any kind of clean fire can be used, providing the flames do not affect other parts of the mechanism in the weapon. It will be well for the beginner to take two pieces of iron or steel to acquire this experience. Two cartridge cases will serve the purpose; file the base of each and tin them with solder; by holding the two together with pliers over the flames a union is made. If it is perfect, the cases will break before the joint.

Fluxes for Soldering — As two pieces to be soldered must be thoroughly alloyed with the materials used as a solder, the temperature must be raised and maintained at such a point that interpenetration can take place completely. It is necessary that the surfaces to be joined be perfectly clean, and means must be provided to prevent oxidization during soldering. Oxids tend to prevent interfusion. This is accomplished by using a coating of some substance that melts at the fusing temperature of the solder, air being excluded. The coating should have a solvent action on the oxid, thus keeping the metal clean and enabling the metal and solder to unite thoroughly. The fluxes generally used are rosin, sal ammoniac, zinc chlorid and borax. The flux is added first and the solder melted by means of a flame or soldering iron, the latter first having been smoothed with fine emery cloth or a file and then properly tinned. Rosin and chlorid of zinc are fluxes commonly used for soft-soldering tin (tinned iron), brass, etc. Rosin is used alone when soldering ribs to shotgun barrels, so that no corrosion will take place between the ribs and barrels. For hard soldering or brazing, use burnt or calcined borax, or boracic acid in powdered form. In all cases where zinc chlorid is used as a flux, the articles should be cleaned after soldering to prevent subsequent corrosion of the metal. This is the basis of almost all soldering salts on the market.

Alloys for Brazing Solders — The alloys or "spelters" used for brazing are composed of copper and zinc alloys. The melting point of these alloys

depends upon the percentage of zinc. As the proportion of zinc increases, the melting point is lowered as shown by the table. The fusing point of spelter should be as close as possible to that of the article to be brazed, as a more tenacious joint is thereby secured. An easily fusible spelter may be made of two parts zinc to one part copper, but the joint will be weaker than when an alloy more difficult to fuse is employed. A spelter that is readily fused may be made of 44 per cent copper, 50 per cent zinc, and 6 per cent tin. Melting temperatures of copper-zinc alloy are:

Percentage		Melting Temperature
Copper	Zinc	(Degrees Fahrenheit)
100	0	1980
96	4	1967
86	14	1890
80	20	1846
76	24	1796
72	28	1756
71	29	1746
63	37	1666
50	50	1616
35	65	1501
29	71	1467
24	76	1364
20	80	1301

This is a very good alloy when a solid joint is desired, as it will adhere firmly to steel or other metals, and under no circumstances will it come loose when used on ramps, swivel bases, and rear-sight bases; you will find that it fuses in a much lower heat.

Any alloy containing lead should be avoided, since lead does not transfuse with copper and thus decreases the strength of the joint. A hard solder for the richer alloys of copper and zinc may be produced from 53 parts copper and 47 parts zinc. Copper and iron have a much higher melting point than brass, thus allowing the use of a rich copper alloy. Tin is often added to the ingredients for gun work but should be used sparingly for other classes of work because it increases the brittleness of the solder. The addition of tin to the copper and zinc lightens the color of the joint, giving it a gray tint and is not so noticeable after bluing.

Silver Solder — This is a hard solder containing silver, copper, and zinc or brass. The composition of silver solder varies according to the nature of the work. A silver solder used very often by gunmakers contains 70 per cent silver and 30 per cent copper. Silver coins may be used for small work. Silver soldering is employed for uniting comparatively small parts requiring a strong joint. The heating is usually effected by a blow pipe, and borax or powdered boracic acid may be used as a flux. The flux should be applied before heating if possible.

A very good hard solder of low fusing point, used extensively by gunmakers, is composed of: 34.36 per cent copper; 49.24 per cent silver; and 16.40 per cent zinc. Borax is used for a flux. Solders for German silver are generally made of the same materials as those which compose the alloy to be soldered, but in such proportions that the melting point is lower. In some cases, silver solder is used for uniting German silver articles; German silver solder is also used for soldering articles of iron and steel because of its high melting point and tenacity. German silver solder is known under such names as Argentan, Arguzoid, etc. It is rendered moderately fusible by an addition of zinc to copper and nickel. If the solder is too brittle, it is an indication of too much zinc. This defect can be remedied by adding the requisite amount of copper and silver. For soldering alloys composed of from 16 to 22 per cent nickel, the following proportions may be used as a solder: copper, 47 per cent; nickel, 11 per cent; zinc, 42 per cent.

Brazing will find its proper place in the realm of gunsmithing. It is used extensively for repairs on all classes of arms, on tangs, guards, shotguns, broken parts of factory arms such as the Winchester, Remington, Savage, and Stevens, or on antiques.

Figure 148 shows a fixture which is used for brazing ramps, sight bases, swivel bases, etc. With such a muffle or hood, all parts of the barrel do not come in direct contact with the flames. It is especially useful when a blow torch or large gas flame is employed. The device insures a uniform heating at the point where the flame is needed, resulting in a clean smooth surface, when low-melting spelter or silver solders are used. When an acetylene torch is used for the purpose of brazing, such a fixture is not necessary. When attaching sight bases or swivel bases to barrels, the inside must be wiped perfectly clean and a coat of bone-black mixed with light paraffin oil applied to protect the bore from scale or oxidization. It is very bad practise to braze any parts to hardened receivers or actions of rifles or shotguns. Soft solder must be employed and the parts held by screws to protect the addition from recoil, for if soft solder is used alone a sudden shock will break it off. Brazing is especially adapted for joining barrel drills to oil tubes. In such work there are always special fixtures employed, as there are also in brazing or silver-soldering any parts to shotgun barrels. If a torch is not available, or even a gasoline blow torch, the fixture shown in Figure 148 may be turned over on its side in the forge, allowing the flames to come through the round opening. When

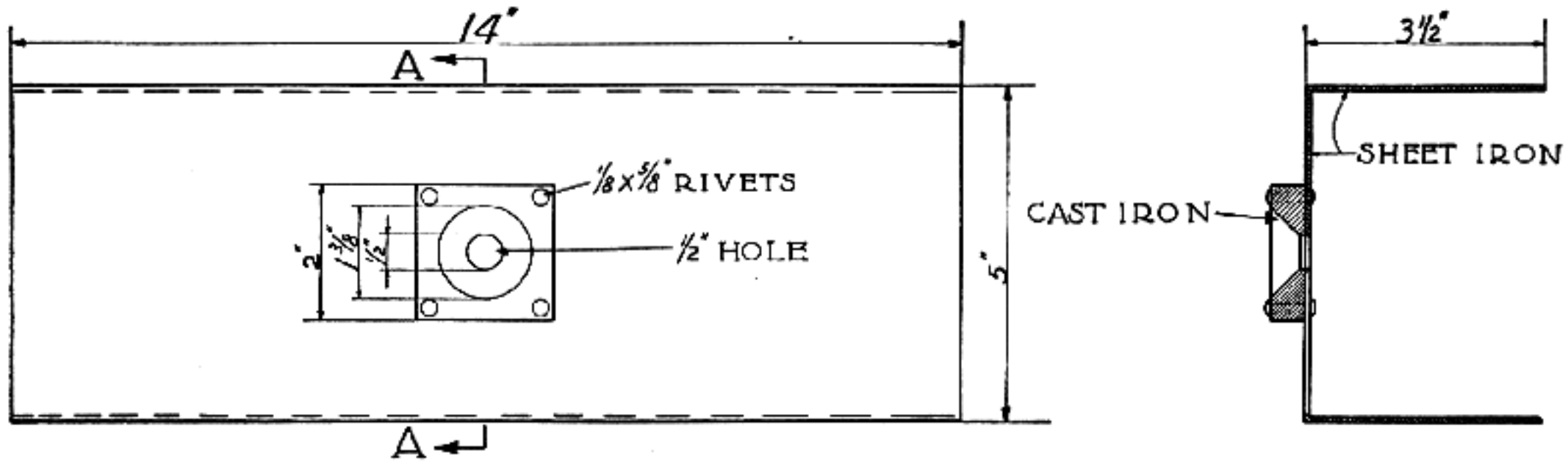

ELEVATION SECTION AA

Fig. 148
Fixture for brazing ramps, sight bases, swivel bases, etc.

it is used over a forge fire, a coke or charcoal fire is preferable to soft coal. It may be necessary to enlarge the opening to the flame inlet until the required amount of heat is given to form the union.

Spelter or silver solder may be purchased from any of the large hardware houses. If they are unable to secure the correct alloy as given in the tables, it is an easy matter to make your own by melting the alloys in a small crucible and casting your own rods by forming a suitable mold from sheet-iron over a 3/16-inch piece of drill rod 12 inches long, and pouring the spelter into this. Rods between 3/32 and 1/8 inch are more desirable, but when casting 3/16-inch rods, form a temporary mold shaped in such a manner that the rods will come out successfully and will be the limit of the size.

Iron or steel surfaces must be thoroughly cleaned before brazing. The surfaces must be made bright either by filing, grinding, or using a sand blast. Brass or bronze parts can be cleaned by dipping them in a solution of one-third nitric acid and two-thirds sulfuric acid. This same solution can be used to remove the scale after brazing.

Brazing Cast-iron — There are so many cheap actions made from cast-iron that it will be well to say a few words about the methods used. First remove all dirt and grease from the pores of the metal by heating to a dull red. The surfaces should then be cleaned either with a sand blast or a wire brush. After cleaning, the parts must be fastened together in the position they are to occupy when brazed. The fastenings may be effected by the use of screws, wires, bolts, clamps, etc. If practicable, the parts should be held in such a way that they can be turned over during the process of brazing without disturbing the alinement, in order to facilitate the application of flux and spelter.

A good formula for cast-iron brazing is as follows:

Boracic acid	8 oz.
Chlorid of potash	2 oz.
Carbonate of iron	1½ oz.

This mixture should be kept dry as moisture or long exposure to the air renders it less effective. The preparation is mixed with grain spelter immediately before using. Heat the work to a bright yellow color and apply the flux and spelter with an iron rod flattened at the end. This method is for an open fire, but when an acetylene torch is used, the bar-rod spelter can be used. After brazing cast-iron, let it cool slowly, as sudden chilling may be injurious.

Autogenous Welding — The process of fusing and uniting metals by the application of intense heat without compression or the use of a flux is termed "autogenous welding." The temperature required is obtained by the combustion of a mixture of gases such as oxygen and acetylene or oxygen and hydrogen. One or both of these gases may be under pressure. The gases are mixed in the nozzle of the torch prior to combustion. Ordinarily the weld is formed by fusing in additional material between the surfaces of the joint. This material is in the form of a rod or a wire and may or may not be of the same composition as the material being welded. This is one of the most useful means of obtaining results; no other manner is possible for the gunmaker. An oxy-acetylene torch is, however, advantageous and one of the most economical additions to the general equipment. It is used for many off jobs such as sweating on ramps, sights, and swivel bases; for brazing, soldering, sweating, and bending bolt handles, etc.; also for the welding of broken parts such as hammers, actions, triggers, plates, and parts from factory arms.

The temperature of an oxy-acetylene torch is approximately 6300 degrees Fahrenheit, and the temperature of an oxy-hydrogen flame is 4000 degrees Fahrenheit. With the former, the number of British thermal units per cubic foot is about five times greater than is obtained with the latter.

Installing the Equipment — 1. See that the following equipment is available:

1 oxygen cylinder
1 acetylene cylinder
1 oxygen regulator
1 acetylene regulator
1 length of ¼-in. acetylene hose 10 ft. to 12 ft. long
1 length of ¼-in. acetylene hose 4 ft. long
1 length of ⅜-in. air hose 10 ft. to 12 ft. long
1 acetylene cylinder valve wrench
1 air regulator
1 spark lighter
1 kit of tools

2. Place the oxygen cylinder to the left of the acetylene cylinder and either clamp them together or chain them separately to the wall or a post to prevent them from tipping over.

3. Remove caps from both cylinders. These caps are used to protect the cylinder valves during shipment and should be placed where they can be readily found when the cylinders are empty and are to be returned to the recharging station.

4. Slightly open both the oxygen cylinder valve and the acetylene cylinder valve, using the valve wrench in the latter case. Opening the valves in this manner assures that they will open easily and that any dirt or grit in the valve outlet will be blown out. The valves should be closed immediately after they have been slightly opened and a little gas allowed to escape. Remember that acetylene gas is highly inflammable and will ignite if it comes in contact with a spark or flame.

5. Attach the oxygen regulator to the outlet of the oxygen cylinder valve, using a wrench to insure that the connecting nut is tight.

6. Unscrew the adjusting screw of the oxygen regulator by turning it to the left until it turns easily—that is, until all pressure on the spring upon which it rests is closed. Slowly open the oxygen cylinder valve. The regulator is now closed. The full pressure within the cylinder—about 2000 lbs. per square inch—is now apparent upon the dial of the cylinder pressure gauge.

7. Turn the adjusting screw of the oxygen regulator to the right a few turns until a little pressure is placed upon the spring within the regulator, thus opening the valve and allowing a little oxygen to escape from the regulator outlet. This will blow out any dirt or grit which may have accumulated in the outlet nipple.

8. In a similar manner connect the acetylene regulator to the outlet nipple of the acetylene cylinder valve, being sure that the connecting nut is tight, and releasing the adjusting screw of the acetylene regulator to the right until a little pressure is placed upon the spring and the valve begins to open, delivering a small quantity of acetylene through the outlet nipple. The adjusting screw should immediately be released to prevent the escape of acetylene into the room.

9. Attach the straight part of the "Y" of the gas mixer (a right-hand thread) to the oxygen regulator outlet, and the acetylene hose (having a left-hand thread) to the acetylene regulator outlet. These hose nuts cannot be interchanged because they are provided with right and left hand threads to prevent the wrong nut from being placed upon the regulators. Using the regulator adjusting screw, blow a little oxygen and acetylene through the mixer to remove any dirt or grit that may have collected. Do not waste the gases unnecessarily and remember that too much acetylene must not be allowed to escape into the room.

Oxy-Acetylene Torch — The arrangements of a standard torch for medium and heavy welding are two small pipes which have hose connections at one end. The opposite ends are attached to a head which holds the torch tip or nozzle. The pipe for acetylene opens with a cylinder which serves as a handle and is packed with a porous material that makes it impossible for the flame to pass this point; however, "flash back" is not likely to extend back of the tip. The tips are interchangeable, different sizes being required for various classes of work. The mixture of the oxygen and acetylene gases takes place within the tip. The acetylene is admitted under lower pressure than the oxygen—through inlets at right angles to the oxygen inlet to insure thorough mixing. Regulators on the storage tanks serve to control the working pressure of both gases.

Adjusting the Torch—Before lighting the torch, the regulator on the oxygen tank should be set to give the required pressure. For the average pressures used for welding different metals, thicknesses are given in tables furnished by the manufacturers. The acetylene is lighted first, the regulator being adjusted so that there is a fairly strong flame. The full pressure of the oxygen is then turned on, after which the acetylene pressure is varied by means of the regulator until the two cones which appear in the flame at first are merged into one small cone. After this cone is formed, no more oxygen should be added. It is also well to test the cone occasionally by increasing the acetylene pressure slightly, which will immediately cause an extension

of the point of the cone. When the cone is properly formed, it will be neutral so that it will neither oxidize (burn) nor carbonize the metal. An excess of oxygen will cause burning and oxidization; an excess of acetylene will carbonize the metal. The tip of the cone should just touch the metal being welded but not the point of the torch, as this might cause a "flash back." An excessive discharge of sparks indicates that too much oxygen is being used and the metal is being burned or oxidized, altho in welding thick metals there will be a considerable volume of sparks even tho the flame is neutral.

Size Tips to Use—The proper size of tip to use for welding depends upon the thickness of the work and the rate at which the heat is dissipated. Sometimes the rate of conduction and radiation is affected by the location of the parts to be welded. In general, heavy parts will conduct the heat more rapidly from the working point; to offset this loss of heat a larger tip is used. In many cases, the tip should be as small as compatible with good work, to economize in the use of gases. If the flame is too small for the thickness of metal being welded, the heat will be radiated almost as fast as produced, hence the flame will have to be held so long at one point to effect a weld that the metal will be burned. On the other hand, if the flame is too large, the radiation may be insufficient to prevent burning the molten metal. The tip should have an opening that will reduce the metal to a plastic, molten condition (not too fluid), covering a width approximately equal to the thickness of the metal being welded.

Making Welds — For the student to become proficient in the art of autogenous welding requires experience and practise. A week's practise will enable any man to master the fundamental principles of it. It is advisable to begin by welding thin strips of iron or steel, not over ⅛ inch in thickness, before attempting work on the parts of firearms. Such light metals can be welded without the addition of a filling-in material. The torch should be given a rotary motion accompanied by a slight upward and forward movement with each rotation. This movement tends to blend the metal and reduce the liability of overheating. If comparatively thick materials are practised on, the edges should be beveled (by chipping or in any other convenient manner). The beveled surfaces are then heated by a circular movement of the flame, care being taken to melt them to a soft plastic state without burning the metal. Wherever fusion occurs, new metal should be added from a "welding rod," the composition of which is suitable for the work in hand. In continuing the heating operation, the flame should be swung around in rather small circles and be advanced slowly to distribute the heat and prevent burning. The surface should be thoroughly fused before adding metal from the welding rods, and the latter should be held close to, or in contact with, the surface. The heat is then radiated from the welding rod to the work; whereas, if the metal wire is allowed to drop through the flame, it may be burned to an injurious extent. When the weld is completed, it is advisable to pass the torch over it, so that all parts will cool in a nearly uniform temperature.

When welding two parts together, it is important not to heat one more than the other, because the hottest piece will expand most and the weld may crack in cooling as the result of uneven contraction. In making heavy welds, the parts should be brought to a red heat for a distance of about three times the thickness on each side of the weld for thickness up to 1 inch, the distance being increased somewhat for heavier parts.

Pre-heating — Parts to be welded are often preheated by the use of a blow torch, gas furnace, charcoal fire, etc. This pre-heating is done either to economize in gas consumption or to expand the metal before welding, in order to compensate for contraction in cooling. Of course, you will never experience this requirement in gun work, but it is well to know the principle. Usually it is advisable to pre-heat in comparatively heavy, thick metals (especially if cast) before welding. This equalizes the internal strains, and very materially reduces the cost. In many instances it is much better to produce expansion before welding than attempt to care for the contraction afterwards. When there is a straight crack, it can usually be opened uniformly by heating the metal at each end and keeping it hot while the weld is being made. As a rule, the expansion obtained by heating at the ends will compensate for the contraction which accompanies the cooling. When a part has been pre-heated, it is well to place sheets of asbestos over it to protect the operator and prevent heat radiation, the surface to weld being exposed. Where a piece of metal has severed completely or a projection has broken off, pre-heating will not be necessary. Whether the metal is pre-heated or not, it should be covered as soon as the weld is finished and be allowed to cool slowly. If the metal is more than ¼ inch thick, the edges should be beveled at an angle of about 45 degrees on each side.

For comparatively heavy welds, it is well to leave three small points of contact for alining the

broken parts in their original position. To make the weld, the flame should be passed for some distance around the fracture and then be directed on to it until the metal is cherry-red. When this occurs, have an assistant throw on a little scaling powder, and when the metal begins to run, add cast-iron from the cast-iron "welding stock," which should be of specially refined material. Powder should only be added when the metal does not flow well, as little as possible being used. Never attempt to re-weld pieces that have been previously welded or brazed without first cutting away all the old metal.

Welding Steel — Steel less than ¼ inch thick can be welded without the addition of any welding metal. If the thickness exceeds ¼ inch the edges should be beveled or chamfered. It is very important not to add the welding material until the edges are fused or molten at the place where the weld is being made. The welding metals should be special wire, and in no case should the flame be held at one point until a foam is produced, as this is an indication that the metals are being burned. Do not hold the flame steadily in the center of the weld.

When welding a crack located in the middle of a piece of steel, such as a fore-end arm, begin by chamfering the metal on each side of the fracture at an angle of 45 degrees, the slope extending to the bottom. Then apply the welding torch to the fore-end arm beyond the end of the crack until there is sufficient expansion to open the crack perceptibly. The weld should then be made; as a rule it will be found that the expansion will compensate for the contraction when cooling. A slight excess of oxygen is less harmful than an excess of acetylene, but it is important so to adjust the gases that the flame is neutral. When the weld is completed, pass the torch over it and the surrounding metal, as previously mentioned.

Welding Brass — The gunsmith is called upon very often to weld this class of metal, especially on older arms such as the muzzle loaders. When welding brass, adjust the flame until there is a single cone, as for steel welding. Keep the point of the white flame slightly away from the weld, according to the thickness of the piece, so that the heat will not be sufficient to burn the copper in the brass or volatilize the zinc. If a white smoke appears, remove the flame, as this indicates excessive heat. A little borax should be used as a flux. For brass welding, it is advisable to use a tip about one size larger than for the same thickness of steel, for as the weld is really cast brass, it will not have the strength of rolled sheet brass. Do not breathe the fumes while welding brass.

Welding High-speed Steel to Machine Steel — The student will very seldom get such work, except when making certain forming dies where it is necessary to have a special hard part to turn or form over the edge on a die. In order to weld high-speed steel to ordinary machine steel, first heavily coat the end of the high-speed steel with soft special iron, obtainable from the makers of welding outfits. This can be done without heating the high-speed steel to the burning point. After cooling, the high-speed steel can be welded to ordinary machine steel without burning, but experience is required to make a good weld of this kind.

When a gun shop is equipped with a welding outfit, it is rather expensive, as the equipment needed is one tank each of acetylene and oxygen, suitable gauges, and torch and rubber hose connection. However, if a considerable amount of welding is being done it pays to add this to the shop. You can accomplish a number of things with one of these outfits, from welding aluminum and copper to building up or filling in metal on parts which otherwise would necessitate making new pieces and require hours of labor. Such an addition would perform the required results in a few minutes. As a student in gun work you may be in a locality where you could take in welding work and pay for such an outfit in a short length or time, for you are able to cut metals as well as weld or braze these broken parts together.

Cutting Metals with Oxidizing Flame — The oxy-hydrogen and oxy-acetylene flames are especially adapted to cutting metals. When iron or steel is heated to a high temperature, it has a great affinity for oxygen and readily combines with it to form different oxids, which cause the metal to disintegrate and to burn with great rapidity. The metal-cutting torch operates on this principle. Ordinarily, two jets or flames are used; first there is an ordinary welding flame for heating the metal; this is followed by a jet of pure oxygen which oxidizes or burns the metal. The kerf or path left by the flame is suggestive of a saw-cut on some torches. The oxygen jet is obtained by the application of a separate cutting attachment to a regular welding torch. This attachment is little more than a pipe containing a tip which supplies a pure oxygen jet close to the regular heating flame. Torches are also designed especially for cutting.

Operating the Cutting Torch — When starting a cut, the steel is first heated by the welding flame,

then the jet of pure oxygen is turned on. The flame should be directed a little inward so that the under part of the cut is somewhat in advance of the upper surface of the metal. This permits the oxid of iron produced by the jet to fall readily out of the way. If the flame were inclined in the opposite direction or in such a way that the cut at the top were in advance, the oxid of iron would accumulate in the lower part of the kerf and prevent the oxygen from attacking the metal. The torch should be held steadily and with a cone of the heating flame just touching the metal. When accurate cutting is necessary, some method of mechanically guiding the torch should be employed.

The maximum thickness of metal that can be cut by these high-temperature flames depends largely upon the gases used and the pressure of the oxygen. The thicker the material, the higher the pressure required. When using the oxy-acetylene flame, it might be practicable to cut iron or steel up to 7 or 8 inches in thickness, whereas with the oxy-hydrogen flame the thickness could probably be increased to 20 or 24 inches. The oxy-hydrogen flame will cut thicker material principally because it is longer than the oxy-acetylene flame and can penetrate to the full depth of the cut, thus keeping all the oxid in a molten condition so that it can easily be acted upon by the oxygen cutting jet. A mechanically guided torch will cut thick material more satisfactorily than a hand-guided torch, because the flame is directed straight into the cut and does not wabble as it tends to do when the torch is held by hand. With any flame, the cut is less accurate and the kerf wider as the thickness of metal increases. In cutting light material, the kerf might not be over $\frac{1}{16}$ inch wide; whereas, for heavy stock it might be $\frac{1}{4}$ or $\frac{3}{8}$ inch wide.

A few of the purposes for which cutting torches are commonly employed are as follows: for cutting steel wreckage, steel piling, steel beams in structural work, risers from steel castings, and openings through steel plates. These torches are never used for such work by the gunmaker, except in the manufacturing division in the tool and die department, to cut die openings in the die plates, etc.

High and Low Pressure Torches — The difference between high and low pressure oxy-acetylene welding and cutting torches, according to the generally accepted meaning of these terms, is the pressure of the acetylene gas. The oxygen, in each case, is under a pressure of one or two atmospheres. With a high-pressure torch, the acetylene has a working pressure of one point or more (depending upon the nature of the work); in the low-pressure type, the acetylene gas only has a pressure of a few ounces. The operation of the low-pressure torch is on the principle of an injector, in that the jet of oxygen draws the acetylene into the mixing chamber which is the torch tip. The proportion of oxygen to acetylene varies somewhat with different torches; it usually ranges between 1.14 to 1 and 1.7 to 1, more oxygen being consumed than acetylene.

With the foregoing information, the student can accomplish such work most economically when only a small amount is to be done. In doing any welding or bending on bolts, the working parts must be protected with moist asbestos or some other protective material. There are also processes of welding by electricity, but these are never used by the gunsmith.

CHAPTER XXVII

Field Repair Kits and Devices

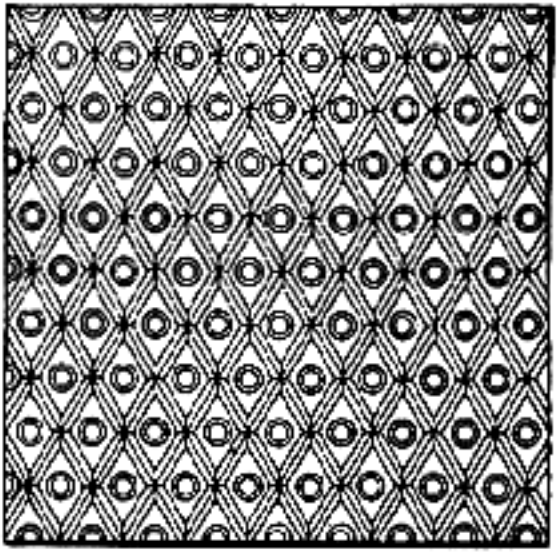

CHAPTER XXVII

Field Repair Kits and Devices

EVERY man who plans for a long hunting trip should be well prepared to accomplish any one of a number of small field repairs on his equipment, for altho the fine arms of today are constructed from the best steels, accidents do happen, and when the individual who is unable to make repairs has the misfortune of breaking or damaging his gun during the trip, he is indeed in a bad way. The repairs that can be made on any arm depend, of course, upon the implements available and the resourcefulness of the hunter. For any well-planned expedition, regardless of its length, there are certain things that everyone should carry and certain facts that he should know. The outfit should contain those accessories needed for properly taking care of arms, such as cleaning rods, oil, bronze cleaning brushes, grease, and flannel patches. Spare parts should also be included for those parts which are most likely to break on a rifle or shotgun. The essential ones for a bolt-action rifle are: striker, extractor, ejector, magazine spring, and shell extractor; and for a shotgun or double rifle, a set of strikers, extra main springs, and top lever spring.

A repair kit composed of various small tools and spare parts is a convenient if not absolutely essential addition to any well-planned trip. When a particularly long and hard journey is planned, a special box should be made similar to a shooting bag, but of fiber, or made like a small suitcase with good strong straps. Just what kind of kit is to be carried depends on how extensive the hunt is to be. The man who is only out for a week includes only the bare necessities; but on a trip to last a month or more, he should be on the safe side, collect a number of tools, and place them in a small shooting bag or fiber case. Even tho they are not used at that particular time, they will be of service elsewhere. The hunter himself should decide just what tools the kit is to be composed of. If he cannot compile a list for himself after he has become familiar with the vast number of tools described in these volumes, then all I can suggest is that he carry along an extra gun—to take care of any emergency that might arise—or include a trained mechanic in the party. So, instead of giving a list of tools, I will here offer some suggestions that should be far more useful.

Repairs to Broken Stocks — One of the most serious accidents which can happen to a gun is the breaking of the stock at the grip. However, such a break is easily repaired in the field, even tho it be in some isolated and wild country. It may be securely spliced in a number of different ways. First, glue the stock as well as possible and wedge in such a manner between two objects that when the glue dries it will be possible to work around the break. Cut grooves parallel to the break and lay into these grooves pieces of hardwood cut from the surrounding section—if in the tropics, bamboo splinters may be used. Glue these into the grooves, allowing the splices to stand well above the stock; tightly wrap twine or wire around these and again allow the glue to set. When it is dry, remove the binding, whittle down the splices flush with the stock, and then tightly wind wire around these; or if not wire, then wax thread, fine leather lace, or green rawhide. Green rawhide, regardless of the animal from which it was obtained, has been very well known, especially to the western pioneers. This has been used for many purposes, even to building corrals; for when once dry it is as strong as any material known. Cut the green hide in strips and tightly bind and tie each piece, allowing the hair to remain on the outside; or the hair can be removed first by soaking the strips in warm water and wood ashes. Scrape both sides, wipe the laces dry, and bind these around the breaks. When completed, place the stock upon two forked sticks over a wood fire, high enough so that the flames cannot reach it, and the heat from the fire will dry this rawhide as hard as iron.

It often happens that a break is straight across the grip. In such a predicament, without rawhide or glue, various other means of a primitive nature must be found. Rosin and gums from various trees may be collected, together with strips of strong bark or vines. Splints are made and these interlocked along the sides of the break below the surface. The necessary grooves can often be made and dovetailed with only a pen-knife. When all parts are in place, insert the gum or rosin and bind the outside with the strips of bark or vines

until a solid strong joint is formed. It requires ingenuity to improvise with the help of nature, but such efforts will improve your skill.

Action or Top-lever Breaks — Shotguns and double rifles are most likely to be put out of commission. The action or top-lever spring often breaks, but this should not in any way affect the utility or safety of the arm. It will merely mean that you move the top lever into the locked position when the gun is closed, instead of snapping it as you have been accustomed to doing. A rubber band may be placed on the lever as a means of reminding you to lock the lever completely in place, even tho the band acts as a rough spring. The strikers or firing pins in ordinary shotguns and double rifles will become useless after continuous wear, owing to the hardened tumbler flattening the head of the striker, shortening its travel, and causing frequent misfires. Before starting on a trip with such arms, always have a set of extra strikers made from the best spring or chisel steel to replace the original strikers when this occurs. In guns in which tumbler and striker are one and the point itself strikes against the primer of the cartridge, the flattening of the striker does not occur and breakage is rare.

Dents in Shotgun Barrels — One of the most common accidents to shotguns far from the beaten path is the denting of the barrels against rocks, etc. Whenever the dent is a bad one, *do not try in any case to shoot the gun until the barrels have been repaired,* for firing out a badly dented barrel invariably causes the barrel to bulge considerably and oftentimes fractures it at the dented section. The following instructions are most expedient for removing the dent: After removing the barrels from the action, insert in the dented barrel a wooden plug whittled from hardwood to a size close to that of the bore, and taper it on one end. Insert from the chamber end and pass it forward with a wooden rod made for that purpose—or even with a good cleaning rod with the brushes removed. Pass it forward until the obstruction caused by the dent is reached. If the barrel is lightly hammered with a small hammer and the pressure on the inside maintained by forcing the plug past the dent, the bulge may be raised. It may be necessary to use various-sized plugs and repeat the operation until the barrel is as near normal as possible. The barrel should be warmed during the process by applying a hot iron to the outside of the dented or bulged part, especially when it is a bruise that reaches deep. Be very careful not to get the plug caught in the barrel. If a lead plug can be made, the operation will be greatly simplified; and a slightly tapered iron or brass plug is much better than a soft lead one. If a hard metal plug can be obtained near the required size it can be rolled with paper until of the correct diameter. The plug should be larger than the bulge or dent.

Repairs to Bolt-action Rifles — On bolt-action rifles, there are usually four parts which need replacement; shell extractor, shell ejector, magazine spring, and striker or firing pin. If any of these should break, it would be preferable that it be either the magazine spring or ejector. If either one of these is broken it makes the gun only a single-shot arm, which is rather an annoyance whenever more than one shot is required, but a broken extractor or striker puts the arm completely out of commission. A broken ejector requires the removal of the fired shells with the fingers, and to make a substitution on a Springfield rifle means disassembling the arm to drive the keeper pin out. Therefore, a good screw-driver is necessary to take out the front and rear guard-screws. To remove the pin, drive out from the top side and place new ejector in position. The Mauser action is simpler, as only the screw is removed from the bolt stop, sliding out the ejector. The replacements of all these parts can easily be accomplished in the field except for the Springfield ejector, and that can be done if it is possible to secure the Government screw-driver which is a standard supplied for Springfield rifles as a field screw-driver.

The above replacements can often be carried in the butt stock of a rifle, even tho they do add a little weight to the arm, for it often happens that just such a part is needed at the most unexpected time. The inexperienced man may say, "I would never load my rifle down with such useless parts." Perhaps he may never have the experience of a broken rifle in the field, but it is the canny individual who looks ahead and uses every precaution to keep some slight mishap from ruining his entire trip. Let a small accident occur to the person who never thought this preparation necessary, and on the following trip he is the most careful of men. It takes the unexpected to teach a hard and well-learned lesson.

Sights — Extra sights are one of the most necessary things to carry on any trip, particularly the frail and thin-blade front sights with small ivory and gold beads. All front sights should be placed in their position with a screw that can be easily removed with a small screw-driver. Most factory arms have their sights fastened by small pins

driven through the base and blade. Such an arrangement should always be looked over before the trip, as a pin is next to impossible to remove in camp without the proper means of holding the muzzle firmly. For this reason screws are preferred. As there are a variety of rear sights it will be a hard matter to give any instruction on these. The three different types are the leaf, aperture, and telescope. These, of course, can become damaged in various ways, but as there is always a means to straighten, tighten, or bring them back in alinement, I shall not offer any suggestions except for a particular type of emergency sight. Leaf sights set in a base on the barrel are usually a form of emergency sight resorted to when an aperture sight is used. If the leaf sights fold down on the base when not in use, it is very seldom possible to damage them in any way, even from a bad fall. As they fold they have a spring to hold them both in an upright and retarded position, and there is never any danger of their being at a half-way point to catch upon any object. When wanted for use, all that is required is to snap them into position with the fingers. Those who use an aperture sight may never require the use of this, altho it is a means of checking the peep-sight. The curious person around camp is usually tempted to fool with the knurled nuts; occasionally the spring becomes weak and allows the windage nut to turn when the rifle is withdrawn from the saddle scabbard or carrying case. Such little accidents have happened, and because of this a man has often had his whole trip spoiled by shooting and missing the only animal seen upon the hunt. After checking up for the reason, the windage is found to have moved. But with a leaf sight set in line at the same range as the aperture, it can be snapped into position at any time if you are in doubt of the rear after it hits an object. By often checking the aperture with the leaf sight, you know that all are in perfect alinement, thus allowing for the best shots.

When a rear sight becomes damaged or broken off entirely because of a very bad accident, it usually requires a considerable amount of ingenuity to make a temporary sight; as this is a rare occurrence, the sportsman must provide means of making a sight out of the material at hand. His success depends upon just how much he provided for such a happening.

Obstructions in Barrels — Getting foreign objects lodged in the barrel of a gun is a well-known source of annoyance and often a dangerous one. Snow, mud, and cleaning patches are three things which are the greatest offenders; a parted cartridge case in the chamber is movable. For the latter, it is best to carry a broken shell extractor, which will always remove parted cases—unless you have a bad chamber, in which instance you must consider a rifle completely out of commission unless you have provided for such an emergency as described in Chapter XVII, Volume II. A good strong steel-jointed cleaning rod having short joints, which fit into the recess under the trap-butt plate, should be a part of every hunter's equipment. It adds considerable weight to a rifle, but it is often worth its weight in gold when mud or snow collects in the bore far from camp. The short-jointed cleaning rods made from $\frac{7}{32}$-inch drill rod, neatly made in joints of 6-inch lengths, are essential in making hunting trips successful. Chapter II, Volume II, contains illustrations of the $\frac{9}{32}$-inch cleaning rod made in 10-inch lengths for the caliber .30. These when screwed together form one continuous solid rod to be placed in the cleaning or emergency kit. When screwed apart they take up very little room. A pull-through is also very handy for wiping out oil, water, etc., or for oiling the inside of a barrel when away from camp for a few days. This method of cleaning a rifle has been in practise in the army for a number of years, and a specially made container has been devised to hold a pull-through on one end and an oil can on the other. This can be fitted into a recess under the butt-plate trap, and, being very light in weight, entails no inconvenience. These are rather expensive to produce as a commercial product, but any member of the N. R. A. can secure one, and they are well worth the trouble to have them inserted under the trap in your sporting rifle.

Occasionally in some isolated districts a cleaning patch will become stuck in the bore. In view of this, it is well to make a tip to screw into the end of the cleaning rod. A wood screw may be used for this purpose; turn down the head and thread it to fit into the tip; by inserting this into the bore and turning it into the obstruction, the latter can usually be removed with very little effort. Such tips should be a part of all regular cleaning equipment.

Individuals who have been allowed to use a gun from childhood make the most careful sportsmen and shots. It is only the tenderfoot who fools with firearms. The adage, "Familiarity breeds contempt," does not apply to the knowledge of weapons, for the person of the "didn't-know-it-was-loaded" variety is usually someone who has had little to do with firearms. To point a gun at any person should in itself constitute a criminal offense. All weapons must invariably be treated as if loaded, not only for the safety of your com-

panions but for that of yourself as well. In time this rule should be so imbedded in your mind that it almost becomes a religion. A state of complete self-possession is acquired through practise and the wise individual will not venture to shoot with his fellow men until that time comes. Remember that there is time for a shooter to make sure that every shot fired is aimed in the safe direction, and this without interfering with the rapidity or accuracy of the aim.

The student should practise handling an unloaded gun until he can bring it up sharply and well to cover any object at which he is looking. In shooting, as in other sports, ease of movement is the first requirement; this is only attained by practise in snap shooting. To become proficient in the use of a gun, it is advisable to handle a rifle such as the Springfield a few minutes a day, and snap the trigger, which does not harm this arm in the least. However, on a shotgun a snap cap must be used. This practise should be adhered to very earnestly for at least two months before the hunting season opens.

To do this snap shooting, it is best to take a good position, like that of an expert at the traps; the left foot slightly in advance, the knees straight, the body slightly forward from the hips, the left shoulder brought well forward, allowing for a longer reach with the left hand. The gun must be grasped firmly with the right hand, the index finger on the trigger; the left must be brought as far forward as will permit the arm to be quickly manipulated, the gun being held well across the body. The left hand held well forward on the forearm gives a better command over the gun, especially with respect to its elevation; but if it is too far forward, it retards a change of aim from left to right. Through these suggestions, new ideas will develop and the beginner will eventually have the greatest respect for all firearms. He will always demand the best from the standpoint of durability and beauty, the precision of which he can admire every day in the year.

While we are on the question of the selection of tools, study Chapter XVII, Volume II, and the question of cleaning equipment and chest which I made for Colonel Whelen. So elaborate a chest is not required, but the tools it contains are essential. These have been described in the chapter on cleaning bores and removing obstructions. A tool kit should contain the means of repairing any anticipated breakdown. Often a number of the same tools can be used from your home workshop, and if you intend to make frequent journeys away from the beaten track, a duplicate set may be collected for just such purposes. Screw-drivers are among the most essential tools, and it is well to carry some extra screws, for they are apt to become lost; or perhaps the threads may become stripped from long use.

How often has one expressed the wish for a vise for some repair in camp! While making the wish you may have been sitting upon the very material that nature has supplied for one. To make a satisfactory vise, study Figure 148-a, which is self-

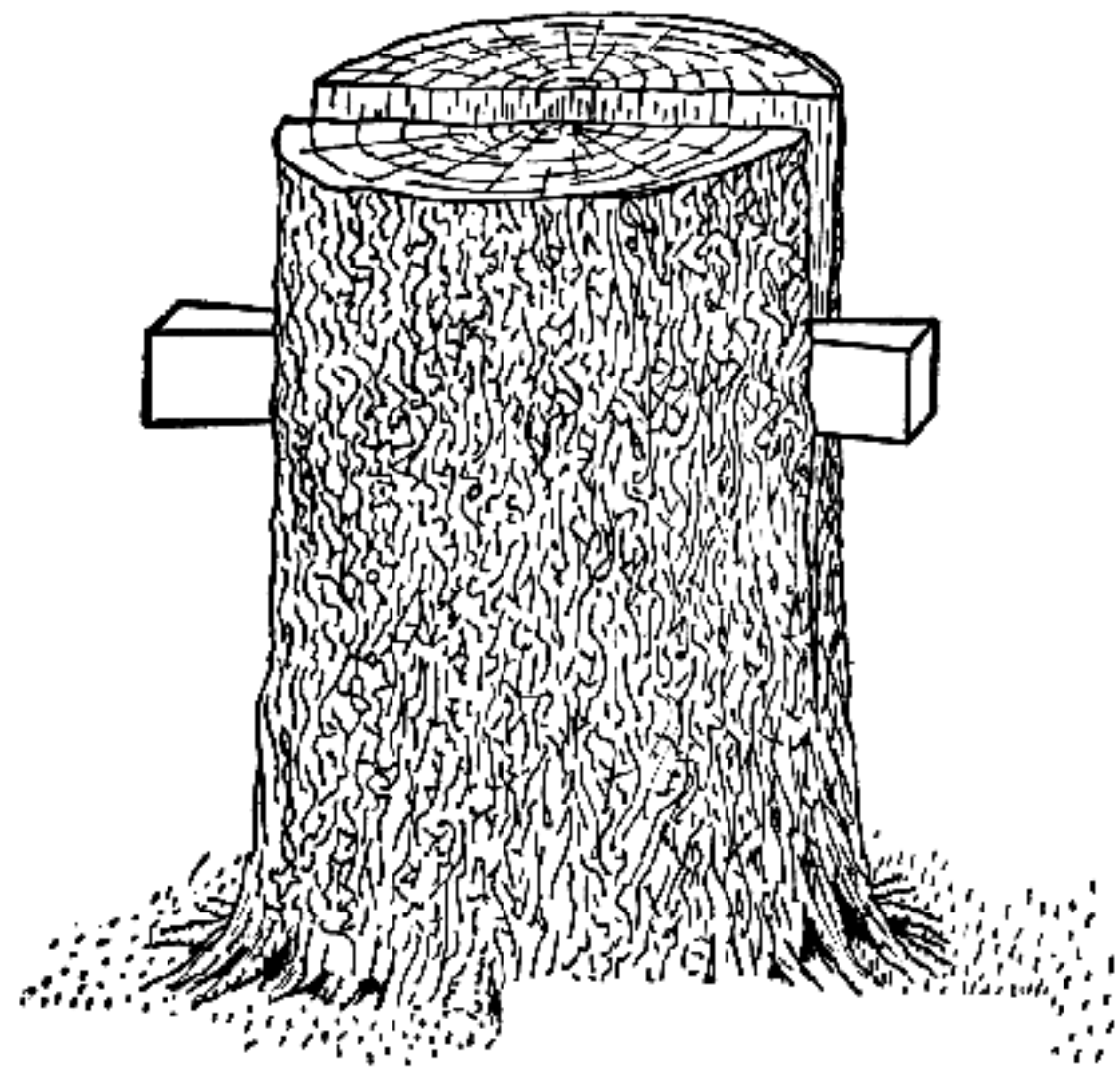

Fig. 148-a
Field vise. A very effective means of holding parts in an emergency

explanatory. It is not necessary to cut down as large a tree as the illustration shows, but one which will be sufficient for the holding powers to clamp the object you may want to work upon. Before splitting the stump, make two wooden wedges; and for the split, insert the wedges and drive them in until the opening is large enough to hold the part. The spring of any tree trunk will hold an object solidly while the work is in progress, whether sawing, filing, or driving out pins. Even small parts can be filed in this manner; therefore, such an idea is well worth remembering.

Before going on a hunting trip all extra front sights should be inserted in the slots and the weapon sighted in. Mark the exact location with a finely scribed line or a fine chisel mark. Then, when it is necessary to make the replacement, there will be no need of too many sighting shots being fired.

I have been trying to impress upon the reader's mind that tools for emergency repair jobs are important, but I do not mean that the equipment

should be littered with numerous non-essentials. By using a little intelligence you can judge for yourself what will be useful to you and what will be merely so much junk. If our forefathers existed hundreds of miles from civilization without even a screw-driver in their packs, and with arms made of the cheapest material, certainly we with the advantages of our fine arms can manage with a kit that can be rolled up in a specially made container to be carried in a back pocket.

CHAPTER XXVIII

Experimental Factors Governing Small Arms and Ammunition

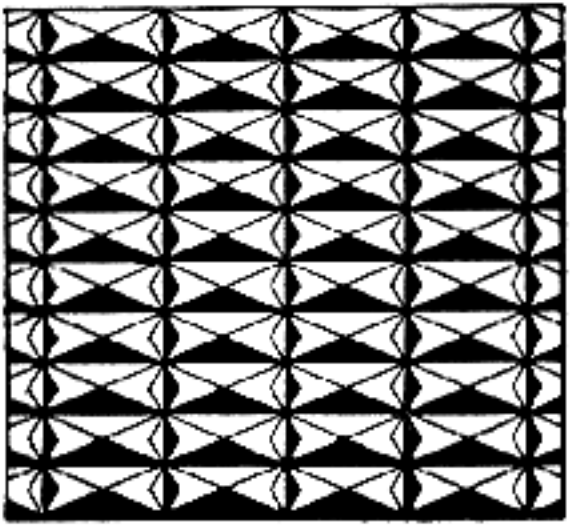

CHAPTER XXVIII

Experimental Factors Governing Small Arms and Ammunition

WHILE this chapter will deal almost exclusively with the experimental designs governing sporting arms and ammunition, interest and profit may be derived from special notes on all parts in relation to the success leading to such developments. Glancing briefly at the effect of military influence on our production of high-velocity ammunition as well as the arms to handle it, we find that it was not long before the merits of the caliber .30 Model 1906 cartridge men became conscious of the advantages conferred by the absence of smoke, the light weight, and the error-absorbing qualities of the low trajectory at ranges outside the scope of the most efficient black-powder weapons. These advantages were no less appreciated by the more progressive rifle makers, who were also conscious of limitations as regards stopping power against dangerous game, and sought to make good this palpable deficiency by means other than bullet designs. In place of the well-tried .600, .577, .500, .475.2, .465, .450, .400, .375, and .350 caliber express rifles, now stands a range of weapons using cartridges which combine the advantage of the absence of smoke, sustainable recoil, and low trajectory over short sporting ranges, with adequate bullet weight and tremendous smashing power.

Cartridges suitable for big game of all varieties, ranging in calibers from the .600 express with its 900-grain metal-patched bullet and 7600-pound muzzle energy, down to the .22 caliber Hornet with its 45-grain bullet, developing a muzzle velocity of 2600 foot seconds, the smallest representative of the high-power class. In spite of the recorded performances of a cartridge of this type, it is considered that their use, except in an extremely limited role and by very experienced hands, is likely to lead to many disappointments. Military cartridges are designed to serve a definite purpose, whereas the uses of sporting cartridges are many. It is an unfortunate fact that a great deal of misconception exists regarding the correct interpretation of ballistic data, with the result that disappointment is often due simply and solely to very gross overtaxation of the capabilities of even the most efficient small-bore bullet.

Before these general remarks give place to the more detailed aspect of modern cartridge and rifle experimental factors, a few brief remarks on cartridges containing their own means of ignition other than center fire may be of interest. The rim-fire design came into use during the time of the Civil War for the Spencer and Remington arms. It is now almost exclusively confined to the popular .22-caliber cartridges, and being ill-designed to withstand high pressures it is never likely to be the subject of wider application. Another fault lies in the large quantity of priming composition that must be employed, which often produces serious erosion in the absence of the latest developed priming composition. Absence of opportunities for the exercise of extreme care and attention in cleaning the barrel after use usually results in disappointments; therefore, it is difficult to place such a cartridge in a class for future developments, except to use it in connection with experiments which will answer for a certain factor to make an experiment successful, such as in an explosive bullet.

One of the most important modern advancements is in the direction of "boat-tailed" bullets, "streamlined," as they are popularly styled. The Swiss can be credited with the idea; but we at the Frankford Arsenal explored the possibilities of a boat-tailed bullet, and developed it to what may be regarded as the most up-to-date and successful example of fine accuracy. The ammunition companies were not dilatory in placing this type of bullet before sportsmen of the United States. The United States adopted this bullet in place of the service 150-grain flat-base bullet about 1923. Switzerland had begun using it in her service about 1912, and it soon came to be regarded by all nations as the most modern and successful of all boat-tailed bullets for military purposes. A study of such projectiles is evidence of recognition of the ballistic advantages derivable from the employment of the rear taper from four to twelve degrees. Figure 149 illustrates such a bullet in flight.

Target shooters who limit themselves to service or National Match rifles, as well as heavy match barrels requiring sights and methods of considerable refinement, may well interest themselves in exploring the possibilities offered by improvements of the cartridge bullet, and barrel for better accuracy. Figure 166 shows a flat-base bullet in flight. Note

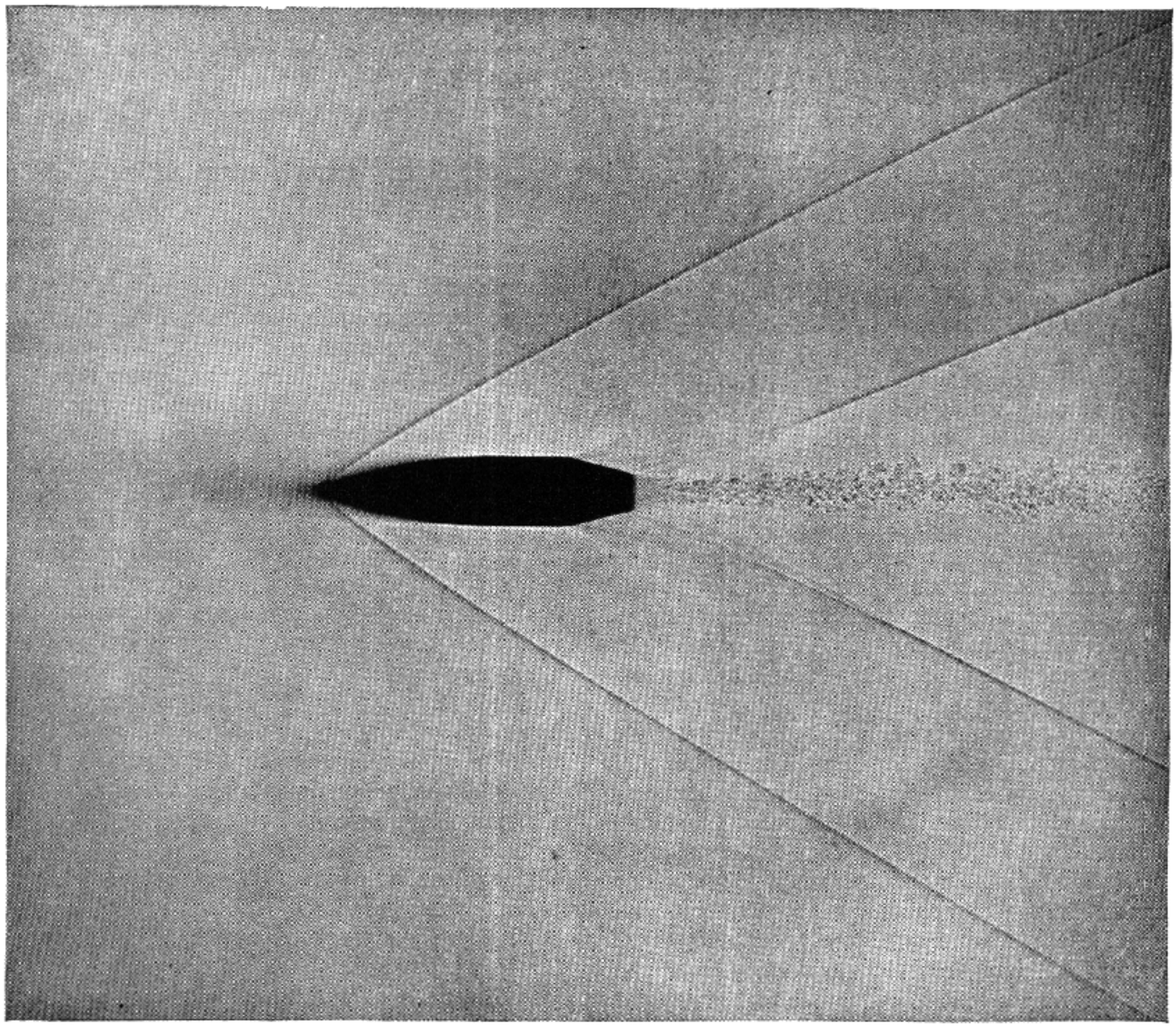

Fig. 149
View of a caliber .30 boat-tailed bullet in flight—the result of Dr. Dayton C. Miller's study on this subject. Note the effects at the base, of stream-lined design, in air resistance

the difference in the rear vacuum as compared with the boat-tailed bullet.

The Cartridge Case — The problem of designing a military cartridge case as well as the bullet is much more simple than the corresponding problem for sporting purposes. In the latter case a complete and accurate knowledge of the behavior of all propellents under all conditions is required because of their many kinds. In the former case the conditions are so strictly limited that there is but little scope for radical changes from existing models.

In a cartridge case for military arms as opposed to sporting rifles the limits of size and weight are all-important, and the problem is confined to a design of maximum efficiency. Therefore, one point is completely determined; the cartridge case must be as full of powder as possible, otherwise weight and space are wasted in carrying a cartridge case larger and heavier than that which is absolutely necessary.

The design of the cartridge head is an important feature, and the principal types are illustrated in Figures 150, 151, 152, 153. Countries which use a head such as that shown in Figure 150 are France, Russia, Great Britain, Roumania, Holland; it is also used in a number of sporting cartridges, especially those used in large double express rifles as well as sporting cartridges of smaller caliber. The cartridge is held in position in the chamber by the front of the rim or flange bedding on the face of the barrel. This type is made expressly to avoid failures caused by wear of the chamber or short length

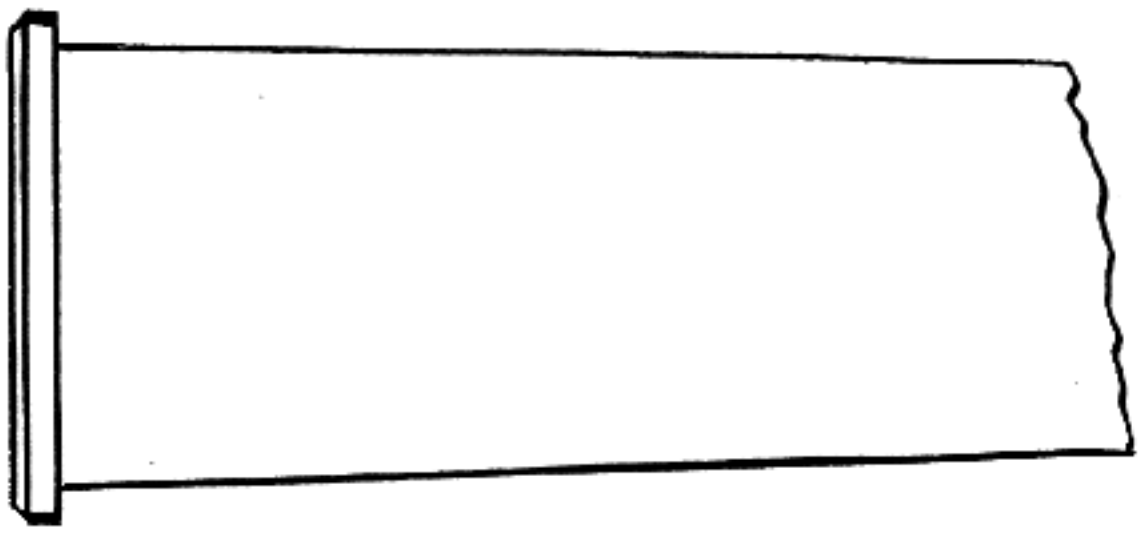

Fig. 150
Rim cartridge case

of cartridge case. Greater tolerance between the head and shoulder can be given in the manufacture of such a case. This cartridge is less expensive to manufacture than the rimless, but for the manufacture of rifle and machine guns or automatic arms the projecting rim requires more expensive tools. A rim case is hard to feed, because the rim catches on other cartridges or other projections while being fed from the magazine to the chamber.

Figure 151 is the rimless cartridge case as used by the United States, Switzerland, Germany, Italy, Spain, etc. This type of head is becoming standardized, not only in military cartridges but in sporting cartridges when a new case is designed. The

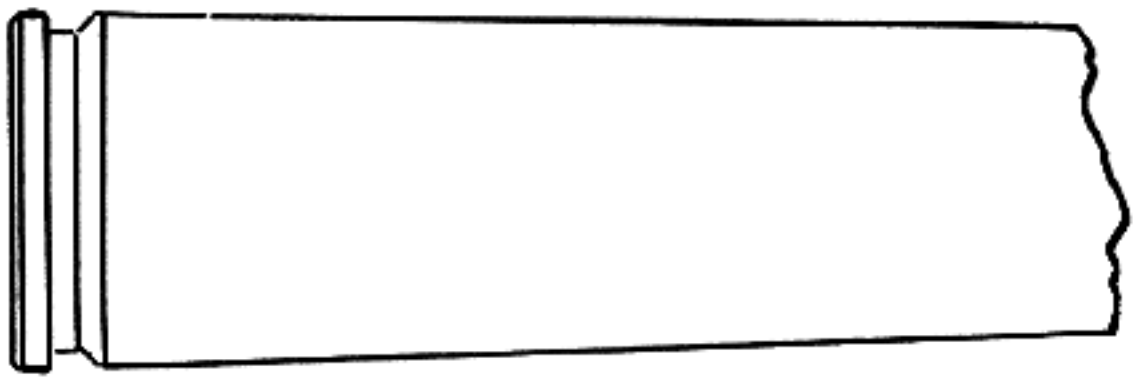

Fig. 151
Rimless cartridge case

cartridge rests in position in the rifle chamber by reason of the fact that its shoulder forms an abutment against the chamber shoulder, which acts as a positive stop. Such a cartridge case is slightly more expensive to make than the rim type, but packs, "feeds," and extracts more satisfactorily. The extractor groove must not be too deep or the head will be unduly weak.

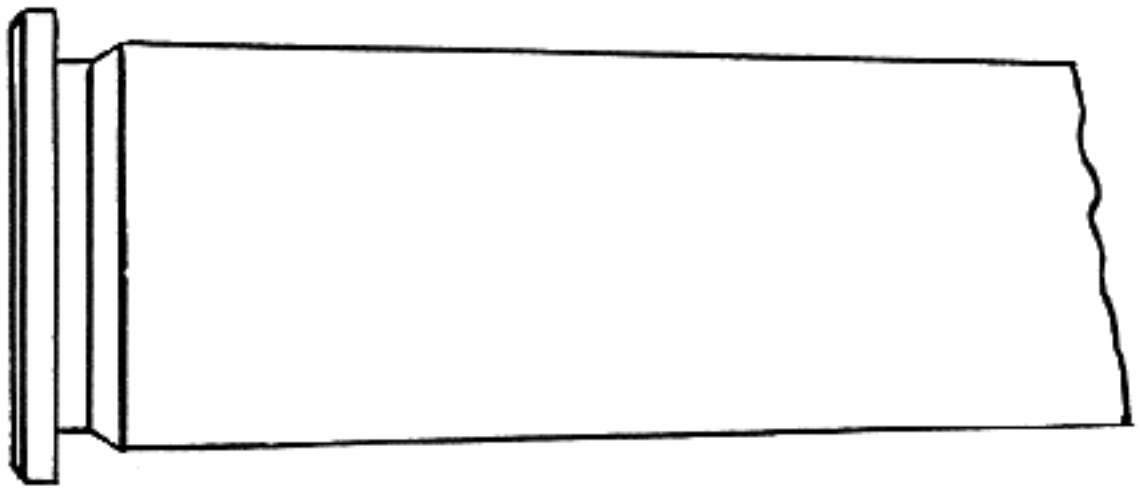

Fig. 152
Semi-Rimless: such a design is questionable

Figure 152 is the semi-rimless, which is between a rim and rimless case. This form is intended to provide the certainty of position of the rimmed case without the disadvantage of a prominent rim. The success of its attempted compromise is very questionable.

Figure 153 is the belted type, an attempt to strengthen the case if it is at the rear, which is only a compromise for the allowance of metal on the inside of the case. The metal formed as a band on the outside could be placed on the inside, making greater strength and at the same time allowing

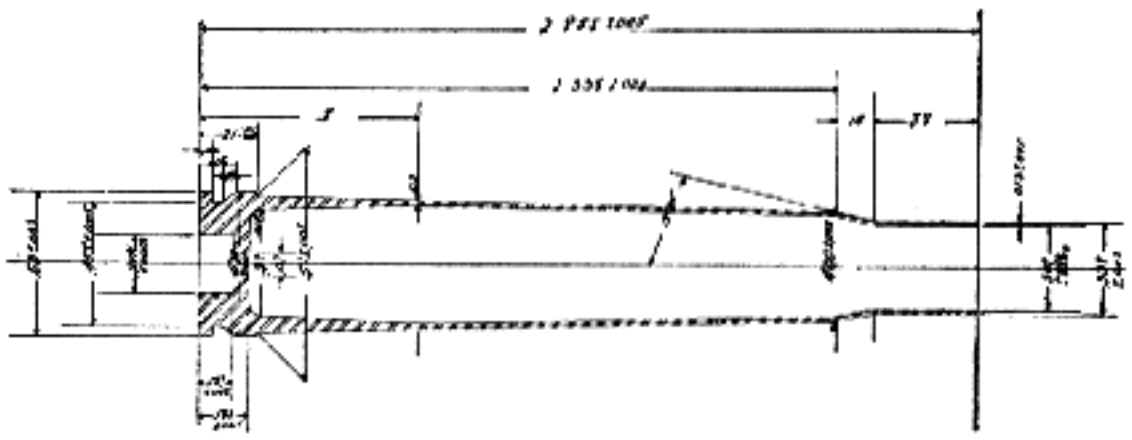

Fig. 153
Belted cartridge case: a design intended only for sporting-rifle cases of large caliber

a case with no projection. Cartridge cases of this design are only suitable for sporting arms; they do not meet all military requirements.

Primer Pockets — The primer pocket and flash hole or "vent" are provided to conduct the primer flash to the powder charge. Anvils are integral with the case when Berdan primers are used. The contour of the anvil is very important, as well as the location of flash holes, when this form of primer pocket is to be used. All American manufacturers of cartridge cases use the center flash hole of 0.08-inch diameter and a square-bottom primer pocket, allowing the anvil as a separate component. The diameter of the primer pocket or chamber is subject to certain limitations, particularly in the rimless design of case; therefore, the greater diameter is 0.250-inch, which can be combined with the deep extractor groove. The form of metal ring separating the two may be insufficient to withstand the back-thrust without undesirable expansion and allow the primers to drop out in extraction.

The primer pocket used for the Berdan type of primer with the anvil in the center of pocket has two needle-like flash holes no greater in diameter than 0.03 inch, whereas, all American-manufactured cases have the 0.08-inch center flash hole. Such a large diameter of vent is required for reasons of anvil obstruction in the primer itself, which does not allow a direct route into the vent. In a case with the center anvil integral and two needle-like flash holes on the side, there is a greater tendency for a more even ignition of the propellent charge.

Figure 143 illustrates this point between the two types of primer pockets. In the Berdan type there is a tremendous pressure set up at the instance of the ignition of the detonation charge. The two needle-like holes for the flame to rush through enable the flash to travel into the powder charge. This is what is called twin ignition, and at the peak of the high pressure very little back pressure escapes into the primer pocket; such pressure would tend to enlarge the pocket and allow the primer to drop out in extraction. The large flash hole in our American cases enables the gas to return into the primer pocket with a pressure equal to that inside the case, allowing expansion of the pocket in many instances. What is really required in a primer pocket where the anvil is a separate unit, is two flash holes needle-like in diameter, placed at an angle starting from the edges of a slight depression at the bottom of the primer pocket. Not only would the gas flame be hotter as it passes through the two holes, but it would penetrate the powder grains at a greater speed.

The question may arise as to what other means of detonation could be satisfactorily used in place of our present means of primer ignition. Naturally, the first suggestion would be an electrical contact. This idea was experimented with at the Frankford Arsenal and found unsuited to small-arms requirements, and it is questionable if such an idea could ever be satisfactorily worked out in view of the many complications entering the design.

Automatic Arms — The necessity for automatic weapons has become an accepted fact since the World War. Such an arm for sporting purposes should be banished altogether, owing to its destructive effect on our fast-disappearing game. The only field open for it is in military operation, whereas the experimental field is only open to those who wish to produce a more efficient weapon. To this end a brief consideration of the evolution of design may assist the experimental engineer. Men working on experimental designs often desire such information.

The primary object of any automatic arm is the economical development of fire control in the hands of excited men in action. Tactics with a new weapon are necessarily in the main only experimental. Still, tactics and design must be mutually reliant, and therefore the design of such a weapon must be influenced by the tactical needs which it is intended to satisfy rather than by considerations of purely mechanical efficiency. During time of war the process of design keeps pace and is more or less ruled by the needs of the moment. During the long periods of peace time, needs are only studied and tend to reach a condition of eliminative compensation and stability. Thus it remains true that for general purposes any new weapons are involved with actual experience with the experimental arms.

These automatic arms can now be examined more thoroughly at the Springfield Armory, as they have become a standard for the United States Army in the caliber 0.30 class. Their advantages and disadvantages can easily be determined. We discover that the rush of gas through the barrel at so high a temperature causes a slight evaporation of the metal surface, which is a wasting of the metal. To neutralize this condition, the barrel alloy should be made near to a high-speed steel similar to that used for cutting tools. The wear due to functioning of the bullets could be considerably reduced by making barrels of steel with a high tungsten content. The manufacturing difficulties will be greater than with the standard barrel steel now in use; the principal obstacles will be found in obtaining suitable cutting and rifling tools, the long time necessary for machine operations, and the consequent increase not only in the labor involved but in the expense of the steel as well. With the advance of time it will be found a simple matter for some of our large steel mills to work out a suitable steel for this purpose.

Constant lubrication of the bore reduces friction. Various methods have been tried in experiments with the service arm, including greasing the bullet and oiling the entire cartridge; but so far it has been found that the objections far outweigh the slight gain. Grease and oil collect grit and are also liable to be rubbed off, while if the bore is to be lubricated at all it is essential that the lubrication be consistent; otherwise accuracy is impossible. A far more harmful effect is met with when any form of lubricant is allowed to remain in the chamber; therefore undue stress is thrown on the breech mechanism through the failure of the case to grip the walls of the chamber, while extraction may be found more difficult through the carbonization of the lubricant and the collection of grit. Figure 154 shows how the breech pressure is increased on the head of the bolt.

The firing of special ammunition such as Tracer, Incendiary, Armor-Piercing, and other ammunition of a similar design, is liable to form abrasives, as some bullets contain chemical compositions, the reaction of which, in many cases, commences before the bullet has left the barrel and may have a very injurious effect on the metal. These facts have increased the importance of the essential part of the weapon—the barrel—demanding not only that it be made of special steel but that the metal be treated

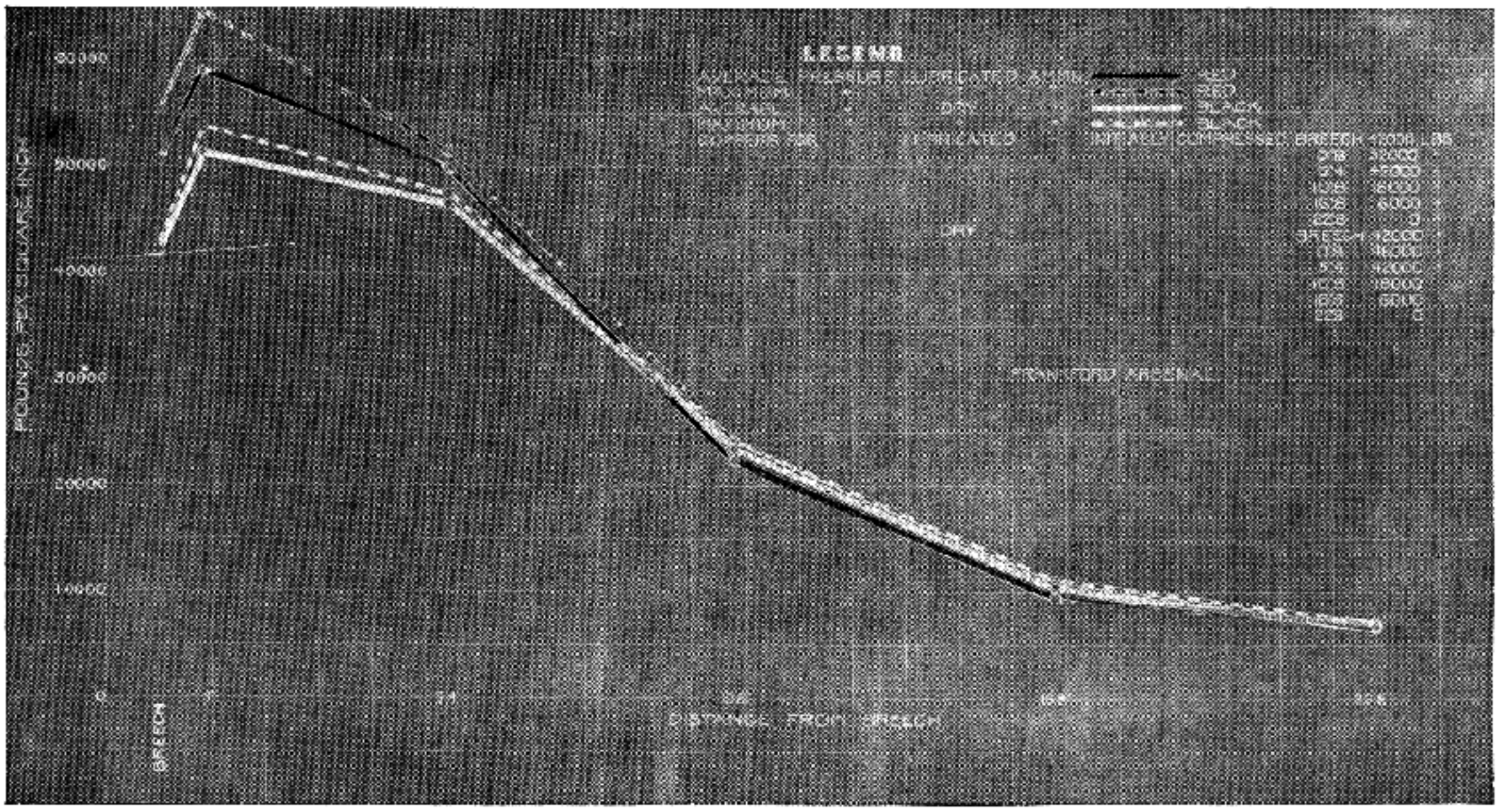

Fig. 154
Chamber pressures of lubricated and dry ammunition. Caliber .30 National Match flat-base bullet. Note how suddenly the pressure curve rises when the case is given a slight film of grease

with some substance in the bore to reduce friction to the lowest possible degree.

The modern tendency in designing an automatic arm is to arrange the components so that they interlock with each other; this has the advantage of eliminating a considerable amount of nuts, pins, and screws which are always becoming loose. Any attempt toward inaccessibility must, of course, be avoided, or else delay may be introduced by the replacement of worn or broken parts.

The design should be such that the arm cannot be made to fire unless the action is fully closed and the cartridge properly supported, *i.e.*, mechanically safe; even then it should only be able to fire through the operation of the trigger mechanism, or an arrangement of fire control, the efficiency of which must be proof against any undue cause, such as a sudden jar. Safety devices should be so applied that their function is accomplished by a single simple movement. The most efficient design, tho not always practical, is one which positively prevents movements of the trigger and has no direct control over the firing pin or striker.

It may be found necessary to have a special type of ammunition. Odd designs are permissible for automatic arms when they are found advantageous; and further, in an automatic gun barrel that is vented for gas operation, the vent should not be a detriment to the functioning of any special types of ammunition; nor should the entrance of the vent cause metal to be scraped off the bullet during its passage over the aperture, thus causing the closing of the vent by the accumulation of fouling. It would be a great advantage if all magazines could be carried separately and the interchange from empty to replacement made rapid without loss of time while in action.

It can easily be seen from the foregoing that it is not always practical to embody all the desired characteristics in one single weapon, as some of them are more or less mutually destructive. Further, the practical requirements which a particular arm is intended to fulfil influence the relative importance of the above considerations in its true design.

Having studied the characteristics of a supposedly perfect and efficient experimental model, all of which cannot be incorporated in any one weapon, it is then necessary to investigate the various types of automatic arms used for sporting purposes, which have been devised to fulfil the requirements for these conditions.

Some indication should first be given as to the various classes into which the different designs of automatic weapons can be grouped. The design is as dependent upon the various needs the weapon is intended to serve, as upon consideration of purely mechanical efficiency; hence we face the questions of weight, caliber and tactical usage forming a basis for the differentiation of the various types.

Since the action of the mechanism must be automatic, some source of power from within the arm is necessary for its operation. The cycle of operations must be faultlessly performed at a high speed after each round is fired. The efficiency of the arm is, to a certain extent, necessarily influenced by the quality of the ammunition. Whatever feed arrangements are designed for the method of loading, it is imperative for safety that the act of making the gun ready to fire does not place a cartridge in the chamber, as a heated gun is liable to cause a cartridge to explode.

The Rifle and Accuracy — It is only within recent times that the movements of a rifle on firing, and its effects on the line of projection of the bullet, have been thoroughly understood. Early riflemen could not trace any fall of the bullet or ball from a muzzle-loading rifle in the early part of its flight, partly because the fall was in fact small, and partly also because, when the weapon had been carefully alined on the mark, it was assumed that the bullet left the muzzle in that time; this encouraged, if it did not originate, the theory of a "point-blank" range over which no fall occurred.

The true explanation—that the whole weapon moved before the bullet left it—was long in being understood. A service Springfield rifle fired from the shoulder recoils about 0.100 inch before the bullet leaves the muzzle, the point of resistance to its movement being below the center of gravity, which has already begun to rise. The barrel is not, as is often supposed, a rigid body incapable of bending; it is very sensitive to stress. Such pressure as can be put on it by the finger will bend it perceptibly. Like any other metallic rod or tube, a rifle barrel vibrates when struck, and owing to its proportions it more closely resembles a rod than a tube in the manner in which it vibrates. It is with its vibrations as a rod rigidly fixed at one end that we are more immediately concerned. In such a case there are two types of transverse vibration which can be set up; first, a fundamental vibration, in which the whole length of the barrel vibrates as a single unit, there being only one node or point at which the barrel is still—the point at which it is fixed (the breech). Secondly, a series of overtones in which the barrel is divided longitudinally into a number of vibrating sections, each terminating in a node at the end near the breech. These two types of vibration can and usually do coexist. The frequency of the fundamental vibration depends on the proportions of the barrel, and that of each particular overtone is always in a fixed ratio to that of the fundamental.

The shock of the explosion naturally sets up these vibrations in a forcibly arranged form, and they are effected more or less by trueness of barrel and perfect wall thickness; also by the taper and shape the barrel is turned to on the outside, by the external attachments, and by the manner in which it is stocked. The compound effect of the fundamental vibration and the overtones, and of the moment the bullet leaves the muzzle, or the inclination of the last few inches of the barrel in relation to the axis of the bore before firing, constitute the main contributory factor in the "jump" of the rifle.

It is essential that the rifle when in use should be regularly examined and repaired if its accuracy is to be maintained. The forearm, if it warps at all, is liable to put pressure on the barrel at one or more points, and may alter or limit its vibrations, and that not consistently. Bands holding the barrel and stock together will have a similar effect if they bear rather tightly on the barrel. If the screws by which the barrel and action are held should not be perfectly true, they will be subjected to unsymmetrical stresses when the gun is fired. If the lugs on each side of the bolt, or the shoulders in the body on which they bear, are not perfectly symmetrical so as to take their bearing simultaneously on firing, the small lateral movement which takes place before they can share the stress equally, will be enough to give a lateral movement to the barrel and will effect the flight of the bullet in a lateral direction. The use of a bolt belonging to another rifle may thus affect the sighting. A rifle clamped in a rigid test, as illustrated in Figure 13, Volume II, will not shoot to the same sighting as it will when held in the hands, and the effect of resting it (for example) near the muzzle, or upon the trigger guard, will, as a rule, vary the sighting.

Variations in the vibrations may arise from other causes also. As the bullet passes through the barrel, the gases behind it are exerting pressure in all directions upon the chamber and upon the bore; the entire bore is, in fact, expanded in a minute degree in rear of the bullet. Naturally, the bullet fits the bore tightly, and so far as possible makes a perfect seal, creating heavy friction during its passage. Any variation from one shot to another in the amount of this friction will affect not only the velocity, but the amount of movement which has been imparted to the rifle before the bullet has reached the muzzle. The exact point of delivery at the muzzle is a very serious factor; therefore the muzzle must be true and square with the bore. There are no marked effects on the form of muzzle selected, whether turned straight across, or formed with radii or angles, just so the bullet is truly delivered.

The actual and relative effect of these influences

will, of course, vary largely under different conditions. A heavy barrel is less affected than a light one by equal stresses. A heavy charge will set up more vibrations and general motion than a light one in the same barrel. When the velocity is low, the motion will have more time to develop before the bullet emerges, and consequently the whole disturbance may be equally great, tho less forcible and rapid.

The basis of the sighting scale is obviously the zero position of the sights when the axis of the barrel receives no elevation to allow for any fall of the bullet, but discharges it parallel to the line of aim. This parallelism is established by adjusting the rear sight where the adjustments admit, until a point on the target is struck which corresponds with the prolongations of the axis of the barrel, the center of the group of shots fired being only so much below the point aimed at as is due to the height of the tip of the front sight above the axis of the barrel and the fall by gravity in the distance traversed by the bullet.

It will be found convenient to fire at a small mark 25 or 50 yards distant, at which the fall is but small. Thus, if at 25 yards a 172-grain bullet loaded in the Model 1906 case is fired, we can state the muzzle velocity as 2440 f.s., and this figure may without material error be taken as the average velocity over this distance. The time of flight will then be, for 75 feet, $75/2440 = 0.03075$ inch, which, squared and multiplied by $\frac{1}{2} g$ ($= 16.1$) gives h as 0.0152 feet $= 0.183$ inches. Supposing that the tip of the front sight is 1.05 above the center of the bore, as in the Springfield rifle, then the adjustment of the sights is such that the bullet strikes 1.183 inches below the point of aim; the parallelism between the line of sight and the prolongation of the axis of the bore is complete.

It is not always possible to lower the rear sight as far as the zero point; still this does not prevent the zero from being ascertained. Therefore, in the case assumed above, if the rifle is to be fired at 25 yards with the sight set at the sighting known to be correct for 200 yards, the projectile will strike above the zero point by 52 minutes, the actual elevation for 200 yards, minus half a minute (or 1 inch at 200 yards) allowance for the height of the front sight.

The value of a minute of angle is at 100 yards 1.05 inches, and at 25 yards 0.262 inch, so that the point of impact should be at $0.262 \times 6 = 1.57$ inches above the zero point. In this way, by firing at 25 yards and using any range table, the correct adjustment of sights for any longer range can be ascertained.

It now can be understood, from what has already been said, that the prolongation of the axis of the bore as above mentioned is not the same here as appears when the rifle is held in a vise or in the rest referred to in Figure 13, Volume II, nor will the line of sights, when correctly set to zero, be the same as compared with the direction of the center of the bore viewed centrally from the rear of the action when the bolt has been removed. The vibrations and movements, already referred to, operate to disturb the rifle before the bullet has made its exit. The amount of the discrepancy between what has been called the "constructive" zero, *i.e.*, the mechancial parallelism of the sights with the bore, and the actual zero that was found by firing, can be ascertained by careful inspection. If we set the sights to their actual zero point (or to some known higher elevation in reference to it) with the bolt removed, and use the rifle rest referred to in Figure 13, Volume II, the eye looks through the bore, and the line of the bore is accurately directed upon a mark or (better) a sheet of paper with a fine cross line, both vertical and horizontal, at 25 or 50 yards. (For accuracy the sighting gauge shown in Figure 120 should be used.) Without moving the rifle, the aim is then examined, and the point at which it is directed is marked on the paper. The angle by which this point differs from the line of prolongation of the bore (correct for height or front sight) can then be measured; this is the amount of the "jump." It may be either positive (upwards) or negative (downwards) in direction. With the Model 1906 service cartridge, it will be found to be between 4 and 5 minutes negative. With the same cartridge only loaded with the 220-grain bullet, it is about 6 minutes and positive. An obvious instance of positive jump may be seen in many revolvers, which have their front sights noticeably higher than their rear sights.

The amount of jump varies somewhat on different arms of a similar type, fired with similar ammunition. It will also be found to vary in the same arm when the amount of charge is varied or when bullets of different weights are used (such as we have in the sporting loads of the 30/06 class). Where the rifle is unsymmetrical laterally, as when it has a heavy projecting bolt head, some small amount of lateral jump will be found. A weight, such as that of a silencer attached to the barrel at the muzzle, is sure to affect the jump considerably, particularly if the barrel is worn and enlarged.

"Compensation" is a term applied to a particular effect of jump. If, from a rifle, you fire loads otherwise similar, but graduated so as to give a series of different velocities increasing or decreasing by small amounts, you will usually find that the shots are thrown successively higher or successively lower. The degree to which the change extends,

of course, is limited, and when the top or bottom of the particular phase of variation has been reached the movement is reversed, after passing through a phase in which the changes are but small. Select, then, a given rifle, and fire charges differing only in that they give successive increments or decrements of, say, 20 f.s. of velocity. Now there are inevitable variations of velocity between successive shots with precisely similar loads, no matter how carefully the ammunition may have been prepared. It is obvious that, other things being equal, the effect of plus or minus variations of velocity from the standard will be that the individual shots will have trajectories slightly less or slightly more curved than the average trajectory, and that the line of fire will accordingly be somewhat elongated vertically. If, for this reason, it should happen that the variation in jump due to the variation on velocity is of such a nature, with some particular rifle and charge developed, and when the bullets having low velocity emerge from the muzzle, they are delivered at a slightly higher angle vertically than shots of normal velocity, and similarly if the bullets having higher velocity are directed slightly lower, the changes thus occurring in the angle of departure will tend to bring together the trajectories of the different bullets, and they will in their flight intersect the normal trajectory at some distance in front of the muzzle. The effect of this will be to give, in the space at that distance, a much closer vertical concentration to the group of shots than would otherwise be possible with cartridges varying so much in velocity. In the case assumed, the irregularities of velocity are to a great extent compensated by the variations in jump; hence the term "compensation."

It will be appreciated that such a result is obtained only when the proportions of the rifle and the constituents of the cartridge cooperate in the desired direction. They may equally well have a neutral or an unfavorable influence. When the shots of higher velocity are directed above the normal and those of the lower velocity below it, the inaccuracies due to the varying velocities will be exaggerated at all distances from the muzzle forward. If, on the other hand, the bullets emerge with the vibrations at or near a neutral phase, the variations of velocity will be neither corrected nor emphasized.

It is evident that the amount of the compensation, and thus the distance at which it is most effective, will be greatest if with the charge giving standard velocity the muzzle is in the mean position between the extremes of the amplitude of its vibrations, and is, therefore, in most rapid motion. To diminish the range at which compensation occurs, it would thus be necessary that the bullet of mean velocity should make its exit at a part of the curve in which the muzzle is approaching the end of a vibration and is in a phase of less rapid translation. It is not, therefore, usually found possible to adapt the vibrations perfectly from this point of view, since preference must be given to the wider considerations of the weight and proportions of the barrel and of the weapon generally. The condition of the bore is of the greatest importance to its accuracy of shooting. It gradually deteriorates, suffers from wear, as well as from avoidable damage.

Fouling affects the mean point of bullet impact and is a great damage to accuracy; when excessive, it often leads to a slight bulge. It appears chiefly toward the muzzle, and often accumulates in lumps that are noticeable even to the untrained eye. This can be dissolved by the chemical treatments given in Chapter XXV.

There is still much obscurity as to the factors governing the deposits of metallic fouling. In some cases it is certainly more readily deposited by some soft batches of bullets than by the harder envelopes. The main factor causing deposits is found in the minute scratches left by the barrel tools, such as the barrel reamers and rifling cutter, and these scratches are barely visible to the eye. When it once starts, the effect seems to be similar to that of a bearing which "seizes" the surface of contact, having become heated after lubrication has failed. The surface of the bullet and the bore both become extremely hot from friction.

The optical examination of the barrel to ascertain its true condition is known as viewing. The procedure is as follows: The barrel is held up to the light in such a manner that a slight shadow is thrown (as from a window bar) into its interior. In a straight barrel the edge of the shadow will show a portion of a perfect cone, and this does not alter its shape if the barrel is revolved or reversed end for end. Should such faults as bulges, bends, crooks or puckers be present, the lines of the cone are distorted. At the same time other faults, such as cuts, scratches, tool marks, pitting, fouling, wear, etc., should be looked for.

It will be understood that if a rifle is to be in condition to give fine shooting results it will need special attention in many details. Not only must the sights be kept perfectly clean, unrubbed and undamaged, but similar attention must be given to the stock, so that the wood will not be liable to warp under the influence of weather conditions such as rain or snow. The wood should be as waterproof as possible, for which purpose linseed oil or some such preparation should be used to fill the pores; thinner oils, made for cleaning or lubricating,

cannot be used. The muzzle of the barrel should not be pinched in any form so as to check its freedom to vibrate. Screws should be watched, as they tend to work loose with firing; it is, however, a mistake to strain them by exerting too much force by tightening them. The condition of the trigger pull is of importance; it often tends to vary with use, and may easily become heavy enough to make a perfect release of the trigger difficult. It may lift a weight of about half a pound more than the maximum weight allowed, which is three pounds for the service Springfield rifle.

Factors in Rifle Shooting — *Barrel*—A steel tube closed at one end by the bolt. The closed end (the breech) has a chamber cut in its interior surface to receive the cartridge. The whole interior surface of the tube, from in front of the chamber to the muzzle, is cut with spiral grooves known as the rifling.

Bolt—This is a device for closing the breech of the barrel. In our modern rifles it is hollow and contains the firing pin and spring. It is fitted with means of withdrawing the fired cartridge from the chamber. It is held against the background thrust of the explosion by lugs which form part of the material from which it is made, and which bear against surfaces on the body of the action.

Receiver—The housing for the bolt. It is attached to the rear end of the barrel by an internal screw thread.

Action—The combination of receiver and bolt, together with trigger, sear, and other mechanical parts for proper functioning of the rifle.

Extraction—Is the first backward motion, or loosening of the cartridge in the chamber, effected while disengaging lugs of the bolt by a cam effect when the travel reaches a certain distance.

Bore—Is the interior of the barrel from the front end of the chamber to the muzzle. Oftentimes used to denote the gauge or caliber. The term is mostly used for shotguns.

Caliber—The diameter of the bore measured across the lands. In American and British arms, the caliber is indicated in inches. In continental arms the caliber is indicated in millimeters.

Headspace: Rimless—The distance between the face of the bolt and the angle in the chamber at the rear of the neck when the bolt is in its closed position. Rim is the distance between the face of the bolt and the rear face of the barrel when the bolt is in its closed position.

Leed—The conical progression of the bore from in front of the chamber to the rifling; also the spiral given to rifling.

Lands—The portion of the bore left between the grooves of the rifling.

Free Travel—The distance the bullet has to pass when it leaves the cartridge case before it engages with the rifling.

Clip—A holder which contains a number of cartridges, usually five, for the magazine of a rifle.

Weight of Projectiles — In ballistic calculations the weight of the projectile is always taken in pounds avoirdupois (7000 grains = 1 lb.), but in tables of weights of rifle projectiles the weight is usually given in grains. For instance, the weight of the bullet for the Service Model 1906 cartridge is 150 grains and is always so stated.

Sights — The human eye, like the photographic camera, which is exactly similar in principle, is unable to focus simultaneously objects at various distances from it. From this it follows that in alining two or more objects, such as the open sight on a rifle with the targets, only one of them can, at any given movement, appear perfectly defined. In tracing the design of rifle sights from the simpler to the more complicated it will be found, however, that the attention of inventors has been directed, first, toward bringing all objects which have to be seen into as nearly the same focus as possible, and secondly, toward magnifying the image or target so as to make it more readily visible and increase the accuracy of aim.

Optical Sights — Various devices have been invented from time to time with the object of providing, by means of lenses or mirrors, simultaneous focusing of both the front sight or aiming point and the object or target without magnification of the latter. All have certain defects, and only practical principles of design shall be discussed.

The Galilean telescope was the first principle of design used and embodies the leading construction on which all low-power field glasses are made. It magnifies the image or the target, but does not give perfect definition of both object and aiming point. The convex lens, which must be of greater focal length than the sight radius, is attached to the tube at the front or near the muzzle of the rifle. The aiming point is attached or ground into the front surface of this lens. The effect of such a convex lens is to make the rays of light from the object converge. The rear sight consists essentially of a very small aperture, which in fact has a concave lens to render the rays from the target or object again approximately parallel.

For those who wish to experiment in this field, a descriptive illustration is best. To enable the eye

to see the object clearly the concave lens at the rear should have a focal length equal to the difference between the focal length of the front lens and the sight radius; on the contrary, the aiming point should be seen very clearly with a convex rear lens of focal length equal to the sight radius. It is evident, however, that there must be a distinct amount of blurring of either the aiming point or the object. The exact amount of blurring that actually occurs is, therefore, greatly reduced by the small size of the rear aperture, which can be used to great advantage. The correct diameter is about 0.04 inch. The actual rear lens used in practise depends on the desire to give better definition of the object or to the point of aim. The target is selected in order that it may not readily become invisible in bad light, and a concave rear lens of slightly longer focal length than that which the figures require to define the object, is used. When it is decided to define the aiming point, it may be that no lens at all will be required in the rear. The perfect definition of the target cannot be obtained if the aiming point is to be reasonably visible, and *vice versa*.

The field of view of such a sight is very limited. It may be calculated by finding the angle subtended at the rear sight by the front lens and dividing this by the magnification. The accidental rotation of the front lens must be carefully guarded against, as it usually introduces a serious error when it occurs. Rotation of the rear lens, to be sure, whenever it is situated behind the aperture, has no effect on the line of sight.

The line of sight radius is the most important because, for any given magnification, the lack of definition is inversely proportional to the sight radius. Thus much more blurring will occur when a sight is only given a 30-inch sight radius than if it were possible to give it a 45-inch radius.

The construction of the rear sight is exactly the same as that of the aperture sight already described, except that provision must be made for a method of holding the rear lens back of the aperture. The sight, consequently, is easy to fix very rigidly, a marked advantage as compared with the terrestrial telescope about to be described.

The Standard Telescope Sight — The essential design of this sight is that of the ordinary astronomical telescope. A convex lens or objective, as it is called, of shorter focal length than the sight radius, is employed. The parallel rays from the object pass through this, and form an inverted positive image at its focus. There is situated the aiming point, which consists of a pointed post, fine cross lines (known as "cross hairs"), or various other shapes and forms of pickets. The inverted image of the target or object is viewed through the erecting lens and eyepiece. In place of the erecting lens a prism has been used, after the design of the ordinary prism binocular. This method is not usually so satisfactory in the construction of a rifle telescopic sight. Due to the fact that the aiming point and the inverted real image of the object lie in the same focal plane, it follows that each appears perfectly defined when viewed by the eye. This is the only sight in use at the present time with which all objects which must be seen while aiming are perfectly defined.

When designing such a sight almost any desired amount of magnification can be obtained. The illumination with a good sight of low power is such that very accurate shooting can be continued in a very bad light. There is one possible exception—when the object cannot be shaded—when shooting toward the sun from a position in bright sunlight at an object in deep shade. In such exceptional cases the use of open sights will be found more satisfactory. In order to keep the telescope from contact with the face when recoil takes place, the focus for the eye is situated at about 3½ inches from the rear line or eyepiece. This gives another advantage to a sight of this nature: it affords a certain amount of lateral relief for the eye. Accidental rotation of the telescope in its mountings—or of the objective lens, or of the cross hairs—usually produces serious errors for optical reasons. It can be clearly understood that "canting" the rifle when aiming cannot cause any error of this kind, but just the ordinary error of "cant"; because, by the act of aiming, the telescope must be rotated with the line of sight as the axis of rotation.

Telescopic sights are completely inclosed in tubes, which are of various lengths according to the designs of the makers. Telescopes the full length of the barrel were used at one time; they were abandoned on account of the distortion in such a tube and its inability to withstand recoil. The telescopic sight is mounted in various designed bases rigidly attached to rifle barrels as well as to the action. Different dovetail arrangements are usually introduced in order to permit the sight to be readily attached and detached. Adjustments are provided for elevation or depression by moving the cross hairs or posts up and down by means of an elevating screw which has a scale inscribed on a turret on the top, or with a rear mount to act for windage and elevation as designed by Lyman and Fecker. Windage adjustments are now provided for in the objective lens, and also by pivoting arrangements of the base.

In modern methods of holding a telescope rigid in its mounting, there is a limited amount of recoil

it can stand, without designing the telescope more rigidly to take the heavy recoil of modern ammunition. Mounts have advanced further than telescopes in their construction, and the manufacturers of telescopic sights should not only make the telescopes but the bases as well in proportion to the caliber of the rifle it is to be used on. Whenever the least bit of lost motion occurs in the mountings, a hammering action is set up by the recoil, which upsets the adjustments and at times loosens the lens and parts in the telescope.

One method of using a .22-caliber telescopic sight for a high-power rifle is to adopt a mounting similar in design to the Lyman, Parker, and Fecker, which consists in avoiding the shock of the discharge by simply allowing the telescope to slide forward in its mountings when the rifle is fired. Such sights as the Lyman, Parker, and Fecker are capable of very fine accuracy, but they still require the utmost care to produce the best results on high-power rifles. Sights must be reset by hand after each shot, and are quite useless for rapid fire.

It is apparent from the above that the main defect of the telescopic sight is the difficulty of keeping it rigid in its mountings. This is particularly important because of the shortness of the sporting type of sight base, so that the effect of any lack of rigidity is greatly magnified by comparison with that occurring with different types of sights. The telescopes themselves are usually so much better made than they were formerly, that they do not often give trouble when the correct mountings are selected. Another objection to a long telescopic sight is that it does not in any way follow the curve of a barrel which has become hot as the result of fast firing, particularly when attached to a caliber .30 Springfield. How much importance there may be to this is a matter of experiments with a properly constructed machine rest.

There can be no doubt that this sight when correctly designed is comparably the best when extreme accuracy is required for objects which are rather difficult to see with the naked eye, but it must be treated as a rather delicate instrument reserved for a special purpose and should have a well constructed case designed for its carrying when not in use.

Small Arms Cartridge Cases — The manufacture of small-arms ammunition has become a very highly specialized industry. The various processes employed are a multitude of precision operations, and a complete understanding of them involves a scientific knowledge of mechanics, physics, chemistry, and metallurgy. I have made no effort to cover the entire field of various designs for sporting and military cartridges. Their construction requires special technical knowledge rarely found in books written in the form of a treatise on the subject. I have been away from the arsenal for a number of years, and many points may be lacking; still, with that foundation there is at least a working knowledge. The interested person seeking actual experience in the making of cartridge cases, primers, and bullets, will find it necessary to visit various cartridge-manufacturing plants to get the necessary enlightenment on the methods used in their fabrication.

Apart from requirements for technical and scientific knowledge, the best cartridges require extreme precision in their development, and as the cost of manufacture is a matter of great importance, this regularity of manufacture can only be obtained by a mass-production layout. The science of cartridge manufacture at the Frankford Arsenal, over a period of years, has evolved special machines for each operation, most of which are automatic. New designs have been made and tried from time to time until low-priced mass production of superior products is possible. When ammunition is turned out in large quantities it should be done in a modern factory, suitably laid out and equipped with special modern automatic machinery, each performance of which is special to the operation it must perform. The necessity for exact interchangeability of its components is guaranteed by a select organization governing the sequence of operations, by the support of all tools and machinery, by a separate organization maintaining them in a high state of efficiency, and by the strict elimination of defective materials.

It is very clear that the making of small-arms ammunition is a serious undertaking, and any attempt to increase capacity very rapidly must be accompanied by considerable waste and also risk. It is essential that there should be maintained, in time of peace, sufficient manufacturing of new ammunition for trial purposes in the field, and to overcome vital difficulties of manufacture. An organization possessing a practical knowledge of the manufacture of cartridges should be held available for any emergency. These unusual considerations ruling cartridge manufacture have been brought forward in the manner best suited, simply because the capacity of any nation to manufacture small-arms cartridges in sufficient quantities during the time of war is so very important. Very few nations are capable of maintaining these organizations, and besides it is quite impracticable during peace time; but if enough men would train themselves to do this class of work in their own experimental shops, as taught in these volumes, we would be a nation capable of rising to such an emergency when

the call came to man the well-equipped plants.

The different types of military cartridges differ considerably in design, and a complete description of the various methods of manufacture for every nation would occupy many volumes and require a lifetime of study. American factories use very different manufacturing methods, depending on their own experience and the local facilities. The various methods may not differ greatly, and it is impossible to give a full description of all the separate details of operations. So far as the aspect of the question mentioned above is concerned, this country is mostly interested in the manufacture of the caliber .30 Model 1906 ammunition and the new cartridges for automatic arms; it is therefore proposed to bring out the designs of some of the caliber .50 machine-gun ammunition now standardized for aircraft service. The first consideration will be the Model 1906 cartridge, dealing with the scientific problems involved at the Frankford Arsenal, as well as confining the description of the processes employed, with various recommendations for the economical production of ammunition in cases of emergency.

The caliber .30, M. I. (present service bullet) of 172 grains, and boat-tailed, is standard for the United States Army. The point of the bullet has been given a special ogive, and if laid out on paper on a scale 10 to 1, a radius could be found near a certain number of calibers. At a given distance from the base is a cannelure, for the purpose of crimping in the end of the case. The bullet is held in the case by friction as well as a special waterproof material being coated on the inside of the case. Between the waterproof material, crimp, and friction, the bullet must undergo a pulling test between 150 and 250 pounds.

The case is of solid drawn brass, and has a rimless head at the base end by which the cartridge is drawn from the magazine and positioned in the chamber and extracted. The primer pocket is recessed in the back of the case with a center flash hole.

The primer, which is made of brass, is pressed into the pocket, crimped, and waterproofed in the joint between the primer and case. The primer has a separate anvil, and this is pressed in place after the composition. The primer composition is pressed in first, and a disc of shellacked or varnished paper pressed over it. Then the anvil is pressed in position.

There is for this cartridge an improved military powder which has a nitrocellulose base and is known as a "progressive" type; that is to say, it is impregnated to a certain depth with a deterrent which has the effect of slowing the rate of burning during the early stages of combustion. Since there are so many types as well as weights of bullets used for sporting purposes with the caliber .30 Model 1906 case, various types of powders are employed to secure the best ballistic qualities.

Factory Layout — The manufacture of small-arms ammunition is divided into three sets of operations. The first operation takes place in the cartridge-case shop, where the cases are drawn, headed, annealed, tapered, etc. The second operation embraces the bullet from the draw to the final assembly. The third operation includes loading as well as primer assembling. There should be a fourth department in the larger plants, and the fourth operation would consist of rolling the sheet brass and bullet metal, using either cupro-nickel or gilding metal; but since the brass plants are so well equipped for such a purpose, it would be more economical to have such plants manufacture the cup rather than pay freight on the waste or scrap. All these operations take place in separate buildings, but under the supervision of one general planning room.

The layout for the cartridge-case division should be such that the movement of the finished operation, backward and forward, is reduced to a minimum. Machines used for slow, tedious operations requiring several machines, should naturally all be alike, due to the simplicity in the making of tools as well as the extra parts needed to keep the machines running continuously. They should be placed in locations which facilitate supervision, and to some extent prevent mixing with other cases in different stages of the operations.

A considerable amount of annealing and pickling takes place in connection with the case-drawing operation, and the heat and fumes from the annealing furnaces cannot be avoided. The pickling processes involve the use of acids; therefore it would be desirable to arrange these operations in a separate wing of the factory, but still accessible to the draw presses. A cartridge case must be annealed several times, as well as washed and water-polished several times throughout the operation. The annealing division should be accessible to the factory, and the various machines for the operations which immediately precede or follow an annealing process should be located near the annealing room, as well as the washing and water-polishing operations.

In the case of small-arms manufacture of ammunition, regularity of operations can only be obtained by very accurate tools made in a well-organized tool room. All tools should be strictly interchangeable. Gauges are made to keep the tools up to the standards expected of their performance, as is always the

case in a highly specialized factory of this nature. To turn out tools in very large quantities, the making of them is performed by a highly skilled body of tool makers and specialists, the latter men to be trained for one particular operation in the production of tools. The latest and best of machinery should be installed in the tool room and always kept in the best condition.

The various components are made to small tolerances and are placed in operation many times. Small-arms gauges wear out very rapidly, and for this reason special gauge makers should only perform this work in the tool room. One man should be responsible for collecting the gauges from the different operations each week and leave new gauges in their places. Therefore it is found necessary to provide a number of extra sets, as well as masters for checking returned gauges.

The work in the loading room is done in specially-built machines which place the exact weight of powder charge, insert the bullet to the correct length of gauge, and also crimp the end of the case into the cannelure. Suitable clothing should be worn by all employees, including rubber shoes. The possession of matches or other means of striking fire should never be allowed inside such a room. Knives or any other steel implements that can be carried in a pocket should be forbidden. This department should be disciplined with special rules and known as the *Danger Building*. These rules should also govern the primer assembly operations. Some means must be provided for controlling the hygroscopic conditions of a loading room to suit the powder being loaded. A proof house as well as a rifle range is required within easy reach of the loading room, equipped for taking velocities and pressures for the correct development of change when loading.

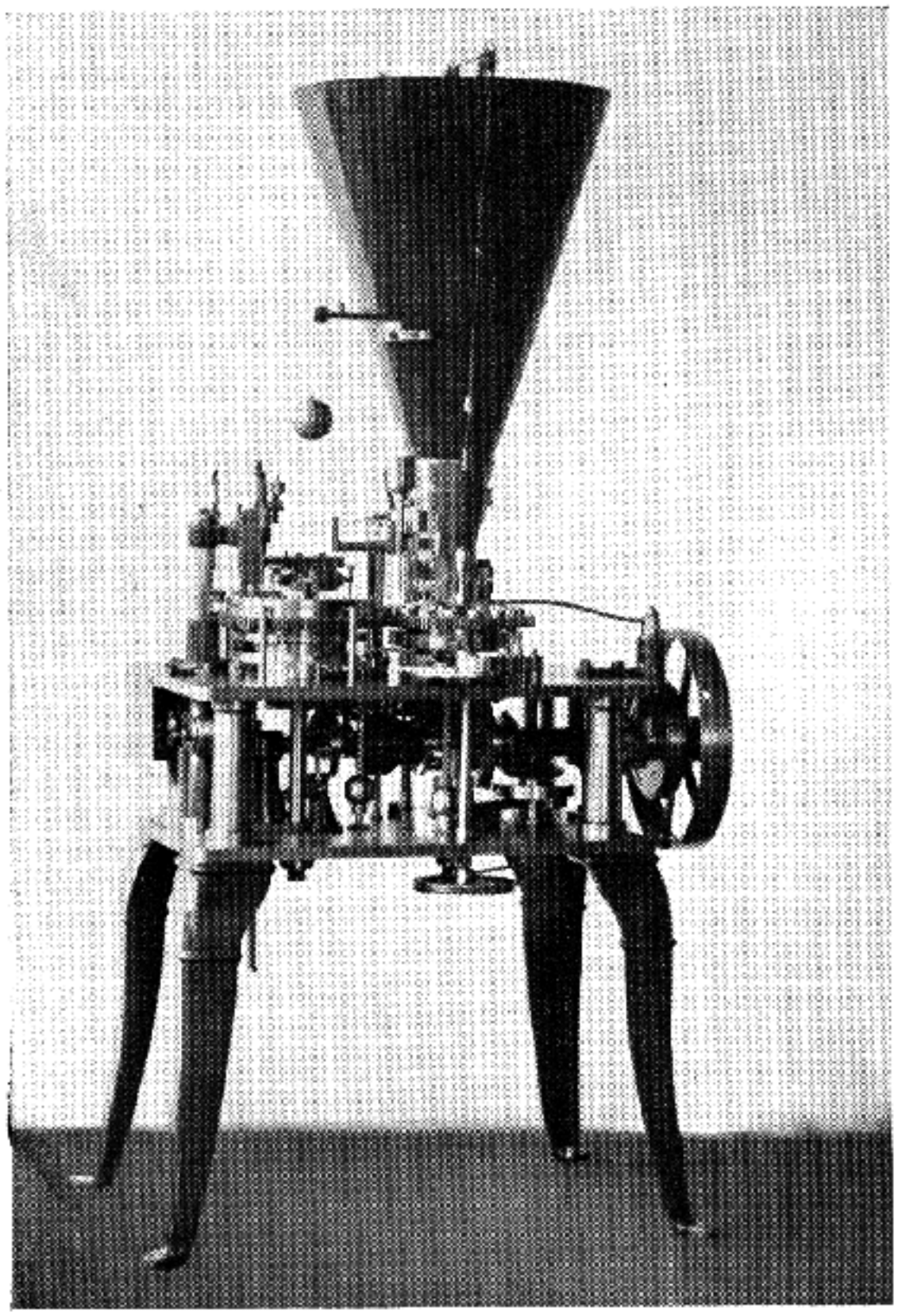

Fig. 155
Cartridge loading machine. This machine gauges the powder charge, inserts the bullet, and crimps the end of the case in the bullet cannelure

Cupping — The two most important considerations in any cartridge case are, first, the brass should be of the best quality, and second, after the completed operations the various parts of the case should have a certain degree of hardness.

The double-action presses are made powerful and carry five punches in which discs are first cut out of the sheet-brass strip, and the inside punches form these into cups. Figure 156 illustrates a press on which this operation is performed. As the punch descends over the metal strip it cuts out a disc. In the center of the blanking punch a separate punch descends, which forms the cup out of the blanked disc, and is then stripped from the punch against the sharp edge on the bottom of the die.

Should the sheet brass be heavier or harder on one side than on the other, there is the possibility of the cup being thicker on one side than on the other. This is very objectionable, as such a fault continues on through all the various operations and appears in the finished case. The waste on the brass strip is cut to a minimum. The position of the dies is so arranged in the die plate that staggered blanks are made possible. This necessitates the use of a double-action press, and the strip fed forward by feed rolls is in a straight line. The scrap as it emerges from the opposite end is cut or sheared for convenience of handling. Usually five sets of tools are used, and make five cups on each stroke of the press. The blanks, however, are not punched on the center line of the strip. For these reasons it is essential that the strip must be of even thickness; it is particularly important that it should be the same thickness on both sides as it is in the center and at the same time perfectly annealed the full length of the roll.

After the cups are made they must be annealed. In this and the following draws which take place, the cases consist of a great number of small pieces,

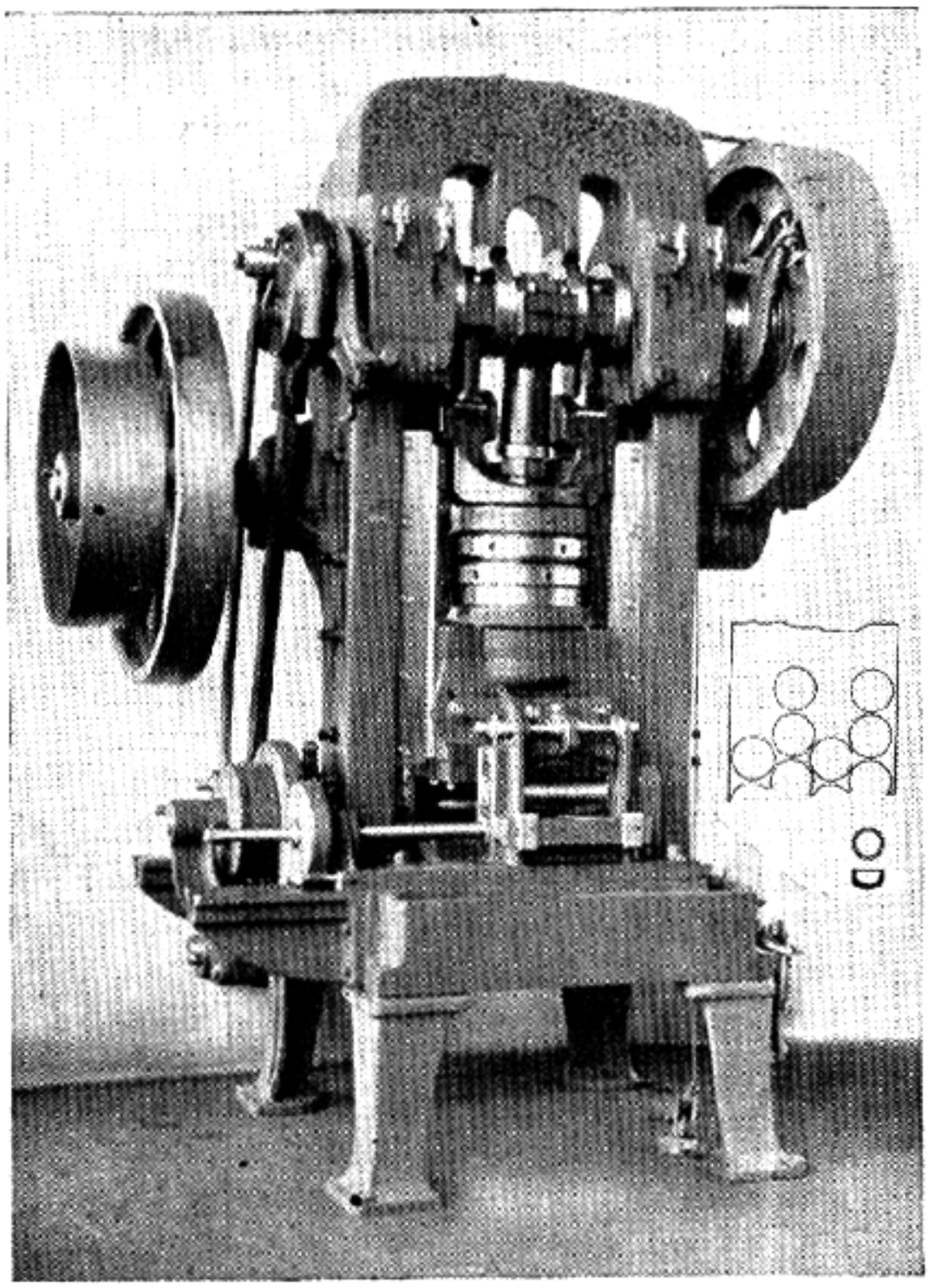

Fig. 156
Double-action press, capable of producing 20,000 cartridge cups per hour

and the annealing furnaces usually take the form of cylindrical drums with a slow revolving cast-iron worm which passes the pieces through in a given time, the furnaces being maintained at a fixed temperature, generally between 1100 and 1150 degrees Fahrenheit. After annealing, the cups are "pickled" or cleaned by immersion in diluted sulfuric acid, rinsed in water by being placed in circular wooden rumbling barrels, allowing a stream of water to play upon them as the drum revolves. They are then placed in trucks and brought to the first draw press, known as the first drawing operation.

The sequence of operations is as follows:

Operation Number

1. Blanking and cupping
2. First anneal
3. Pickle
4. Water polish
5. First draw
6. Second anneal
7. Pickle
8. Water polish
9. Second draw
10. Third anneal
11. Pickle
12. Water polish
13. Third draw
14. Bumping
15. Fourth anneal
16. Pickle
17. Water polish
18. Fourth draw
19. Fifth draw
20. First wash and dry
21. First trim
22. Pocketing
23. Heading
24. Vent punching and pocket sizing
25. Head turning
26. Second wash and dry
27. Body anneal
28. Tapering and plugging
29. Third wash and dry
30. Second end-trim
31. Point anneal
32. Wash and water polish
33. Case inspection
34. Primer inserting, also varnishing primer and mouth

First Draw — The cups now pass to the first drawing operation to be drawn gradually into longer tubes. This operation of "drawing" consists of passing the cups through two draw dies and a punch so made that the correct percentage of reduction in the brass will be drawn out for the following operation. The punch is made smaller than the internal diameter of the cup, so that some of the metal in the base of the cup is transferred to the walls. The dies are also made smaller in diameter than the cup, and the difference in diameter between the punch and the dies is such that it

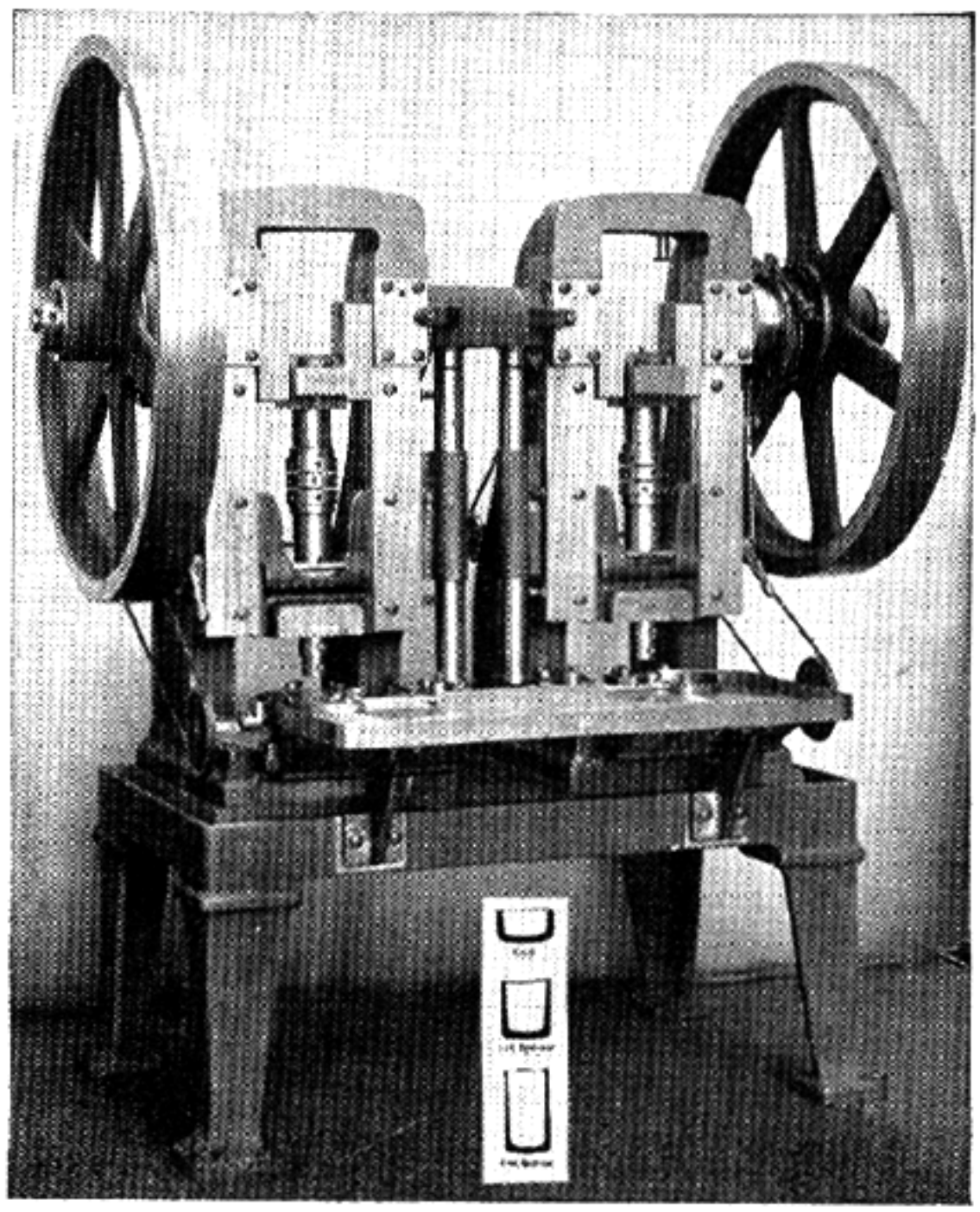

Fig. 157
First and second operation draw press, friction dial feed, for rifle-cartridge cases

lengthens them and also thins the walls. This draw press is illustrated in Figure 157. The cups are placed upon a revolving feed plate. The press also carries two punches. A separating piece of metal is so arranged that they are always in their correct positions to be fed over the dies when the punches descend. The punch then descends and passes them through the die, from which they emerge in the correct length. Second, third, fourth, and fifth drawing operations are performed in a similar manner, but with a different design of feed mechanism.

The amount of drawing or the percentage of reduction which can be done in each operation is dependent on the extent to which the brass can be distorted without hardening the metal. A cartridge case is usually drawn five times, except in cases of smaller shells. After each draw, except before the last, the cases are annealed and pickled in a diluted sulfuric acid bath to remove the scale, and then water-polished.

Bumping — Between the third and fourth drawing operations is the "bumping" process, which flattens and slightly concaves the base of the case. Advantage is taken of the opportunity at this point to reduce the very large radius or crown at the base, so that the metal at that point can be flattened both on the inside and outside, while the case is in an annealed state. This operation consists in pressing the base of the case between two punches. A die acts as a means of holding the outside size to a given diameter. This operation is more or less important, since the operations that follow require a flat surface to work from; and at the same time it allows a given wall thickness, which is easier to retain in the twenty-second and twenty-third operations. Improvements can be made in this operation, such as placing a modified pocketing process to relieve some of the work in the twenty-second operation. A machine is used similar to that shown in Figure 159.

When an anvil is made integral with the case the outer punch is so shaped as to impress into the metal recess an imprint of the anvil so that the following heading operation will be able to bring this up to the desired form. When a case is made with the anvil in a primer pocket it is very important that no lubrication is used as in the regular bumping operation; it should be kept free of grease or liquid on the case or the indenting punch during the operation, as any lubricating liquid trapped in the closed recess of the punch will act hydrostatically and prevent the anvil from forming in the base of the chamber. For this reason, after the third draw the cases are washed in a soda-water solution and dried in hot air. The only lubrication used is a cloth saturated in lard oil, which the operator wipes over the cases as he feeds them into the machine.

Fourth Draw — The fourth draw operation follows. Annealing takes place before the cases are fed to the machines, and as this draw has a noticeable effect on the length of case it is realized that the edges of the walls become rather uneven and ragged. The fifth draw is arranged to make the cases longer than required. After the fourth draw operation the cases are not annealed but are fed to the fifth draw press after they pass through the fourth draw dies. Figure 158 illustrates the type of press used.

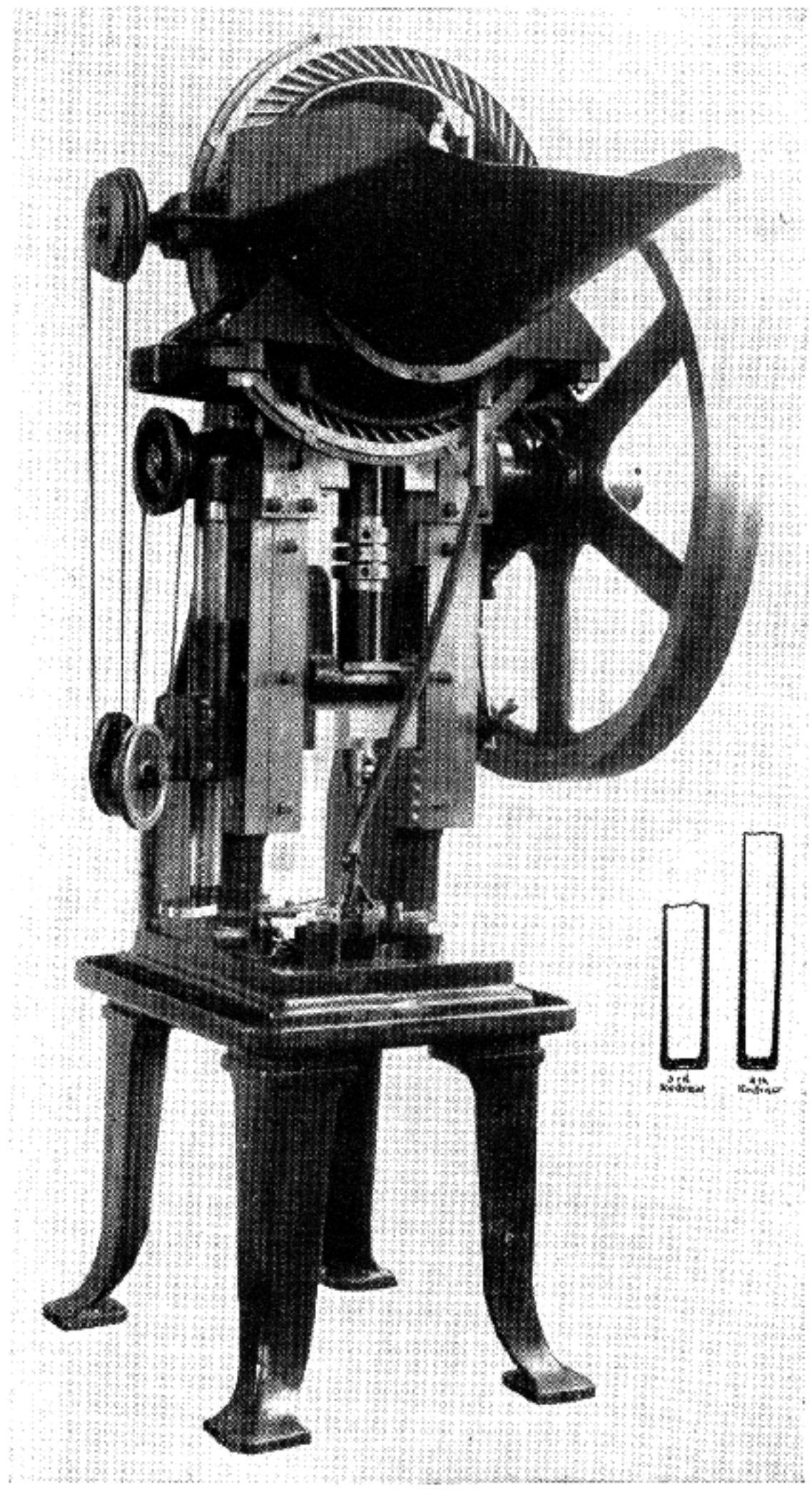

Fig. 158
Hopper-feed cartridge case draw press. This machine produces the fourth and fifth drawing operation on the cartridge case

Fifth Draw — The fifth draw is the most important of the drawing operations, and great care must be given the draw punches and dies. They must be changed very often in order to keep the desired standard of the cartridge case when completed. The thickness of metal at the point where the neck of the case is formed must be held to a given tolerance. When new punches and dies are placed in the press, minimum thickness should be produced; then the punch and dies are allowed to wear to the maximum thickness. The greatest amount of tolerance that can be given is only 0.0015 inch, due to the fact that any bottle-necked cartridge case thickens between 0.003 and 0.004 inch in the twenty-eighth or tapering operation. When a case is manufactured that has an uneven thickness of metal, this is the operation in which it appears very pronounced.

Among the gauges to be provided are a ring gauge and a gauge for metal thickness. A length gauge should not only be provided at each machine during the drawing operation, but should be used to determine the correct length of case being drawn for the first trim. Rather a confusing situation exists if the fifth draw is only gauged with a ring gauge; working the base of the case through a ring gauge gives a false reading; the solid metal in the head creates a difference of 0.001 inch between the base and where the metal begins to taper off, forming the wall thickness of the case; therefore a dial metal thickness gauge must also be used as frequently as the ring gauge for a check.

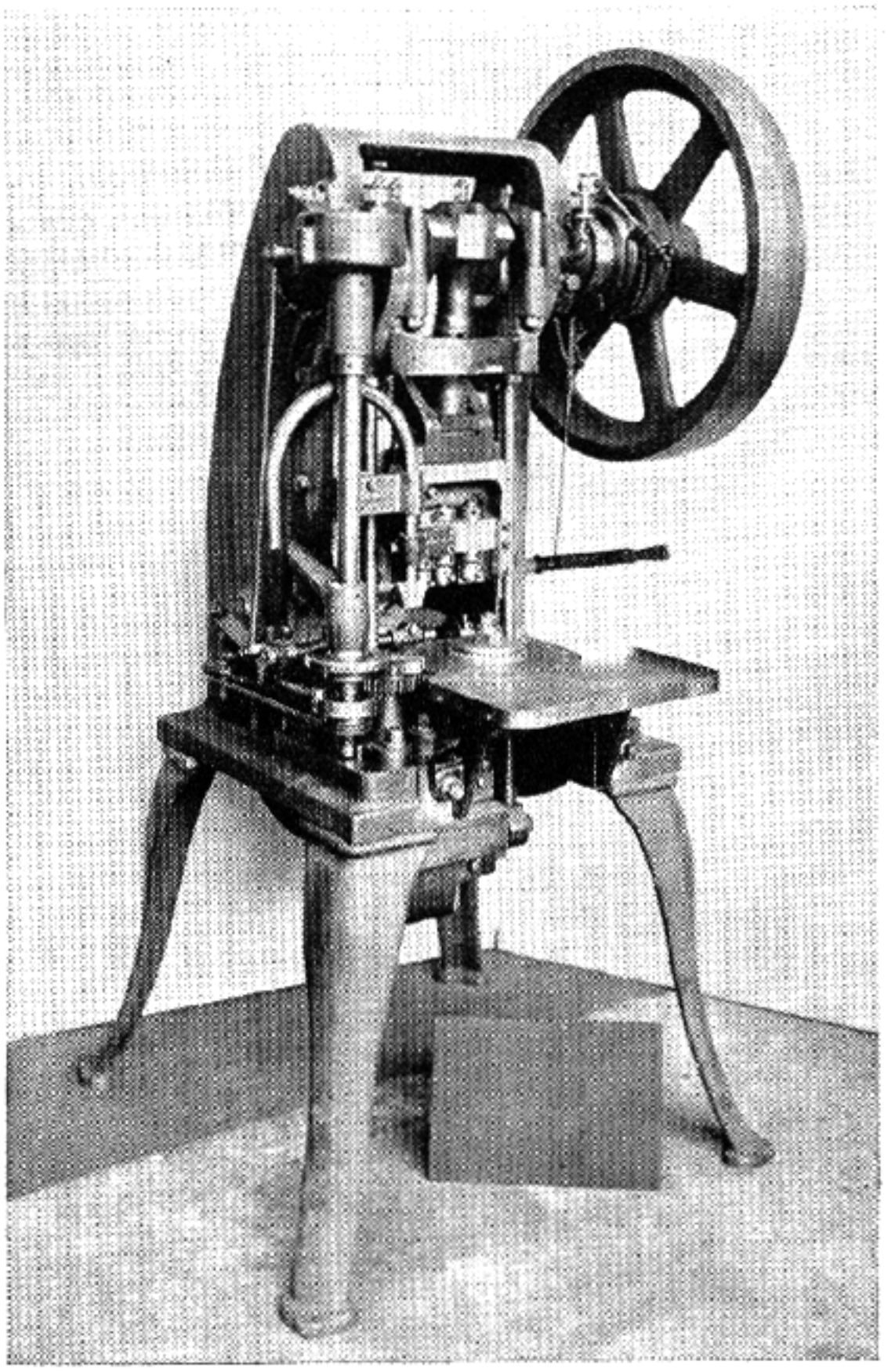

Fig. 160
Cartridge-case, vent-punching and pocket-resizing machine

First Trim — After this operation the cases are washed in a soda solution, passed through boiling water, dried, and then given the first trim to a definite length on an automatic machine. The case is fed on a revolving spindle in which two sliding rings are held together by a spring. On the back of the machine a circular revolving cutter is moved into the cutting position by means of cams. After the case is trimmed, a device removes the scrap before another case is fed upon the spindle. Advantage is taken of the softness of the head to carry out the pocketing and heading operations.

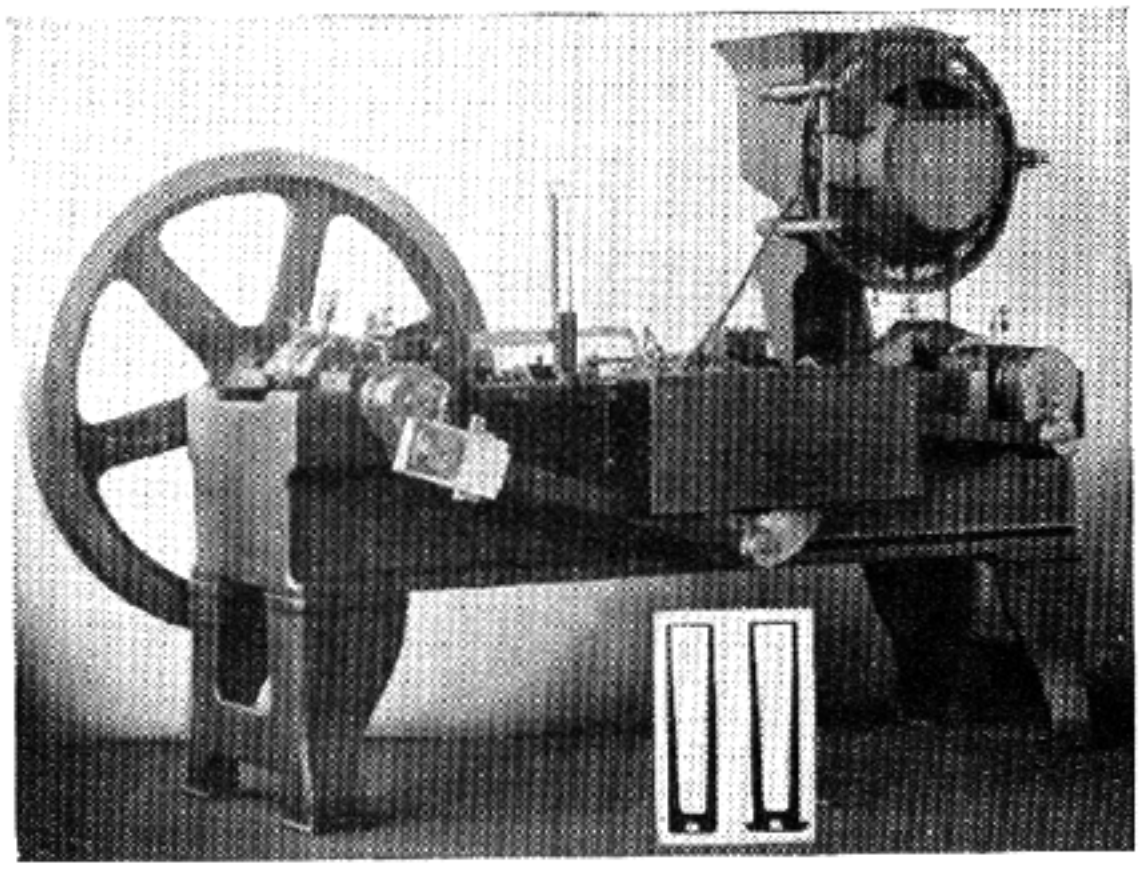

Fig. 159
Cartridge-case pocketing and heading machine

Pocketing and Heading — As the trimming operation precedes the pocketing operation, this process embraces all the work of heading the case. In both instances the shell is supported inside a die, set in a heavy steel die holder, the punch passing inside the case. The head is formed by the punch which presses the metal of the head on the face of the die. The travel of the two punches is accurately adjusted so that the metal thickness is left exactly the correct web tolerance where the vent hole is punched. The heading punch is left a trifle smaller in diameter, and this is resized in operation twenty-four. The heading punch is marked with reversed letters and numbers showing place of

manufacture as well as date—month and year. The machine used is shown in Figure 159.

Vent Punching — Piercing of the vent hole is the next operation, as well as resizing the primer pocket. The machine (Figure 160) which performs this operation has a circular revolving plate in which a series of dies are held. The fire-hole piercing punch performs the first operation, followed in resizing of the primer pocket. Next is an indicator for the purpose of tripping the machine in case a hole is not pierced due to a broken punch.

After the fifth draw and the closely related pocketing and heading operations, the amount of work to be done on the base end of the case is very small. If the cases were annealed at this stage they would undoubtedly remain too soft, and the results in the firing test would be enlarged primer pockets and swollen heads. There is, however, no annealing done at the base end of the case after the fifteenth operation. The amount of work performed after the bumping operation must be carefully adjusted so that further work at the base end of the case just brings the brass up to the desired degree of hardness. The metal should be much softer at the front end of the case, as there is still a great amount of forming to be accomplished, partly for the reason that the finished case is of a tapered form, and the diameter at the front end still has a greater reduction from the shoulder.

Head Turning — The cases are now head-turned to the correct diameter in an automatic head-turning machine. The cases are held in a spring collet or chuck. The exact amount of holding pressure is applied, and the heads turned with an undershot form tool, similar to the way a shaving tool is worked on an automatic screw machine. The feeding arrangement is unique. As the cases are fed down a slide from the hoppers, a swinging section of the end of the feed mechanism comes into position in the center of the collet. A rod then comes forward, pushing the case to the exact depth in the chuck. The mechanism is so timed that the rod returns very suddenly. The tool post moves forward as the tool begins to cut against the shoulder on the head of the case, to turn it to the exact form and gauge size. After the head is turned the tool post is returned in the clearance, the chuck opens, and the case is ejected with a spring kicker to fall into a truck placed under the machine. The brass turnings or scrap goes down another opening or chute into a separate truck. Figure 161 illustrates this machine.

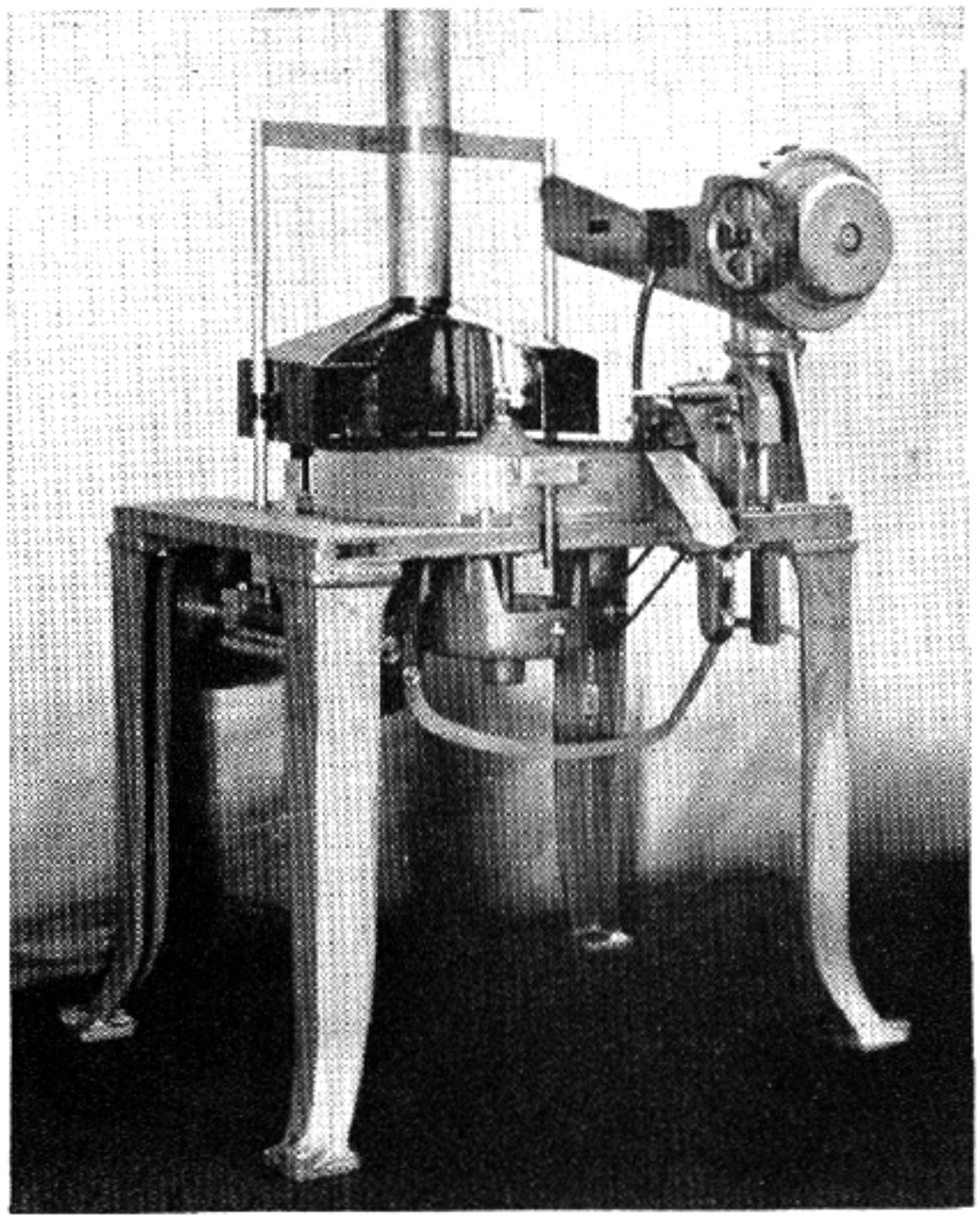

Fig. 162
Cartridge-case annealing machine

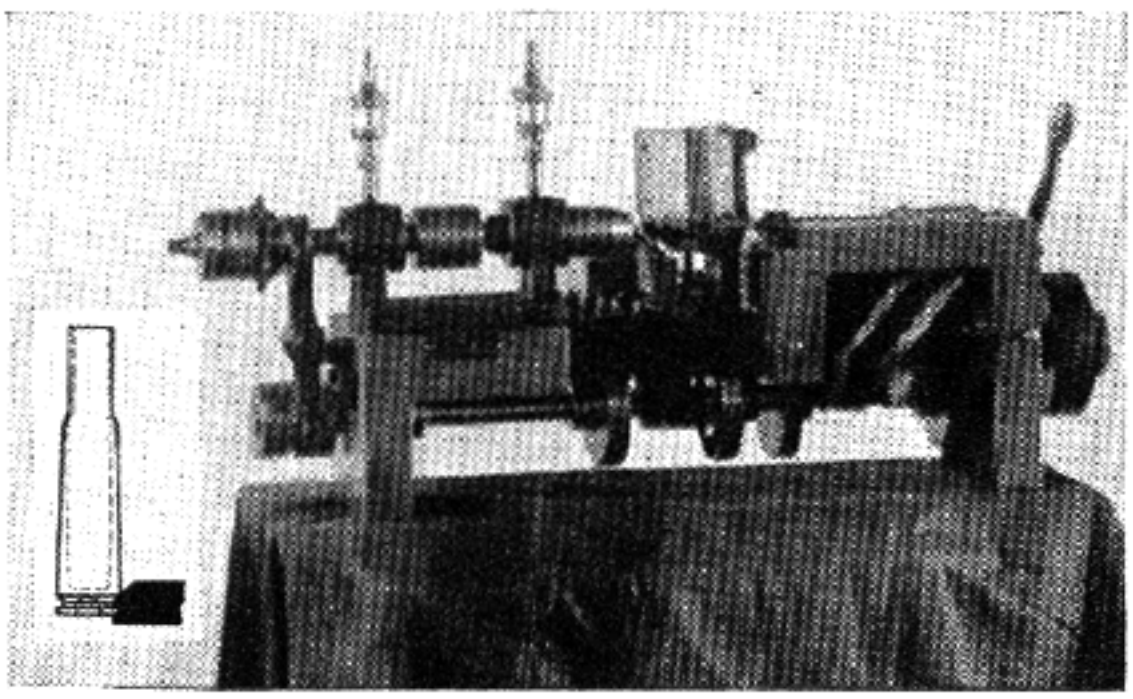

Fig. 161
Cartridge-case head-turning machine

Body Anneal — The cases are now washed and dried and given the body anneal. The machine is shown in Figure 162. This is done by passing them through a series of gas jets on a circular revolving table, the heads emerged in water so that the temper of the heads will not be endangered during the operation. The depth of water will govern the position of temper on the body of the case. A more detailed account will be given later on this subject.

Tapering — After the body annealing process the cases are tapered. This is done with two dies set in a holder. The tapering is carried out in two

operations on the same machine, the first being a roughing or breaking-down operation, while the second finishes the case to the exact size and to the exact length from the shoulder to the base. A plugging or inside resizing operation is performed on the neck of the case to give the bullet the proper amount of friction to hold it in position during the loading operation. The tapering machine is made with a circular revolving plate, as shown in Figure 163. Separate inserted plates are set into the re-

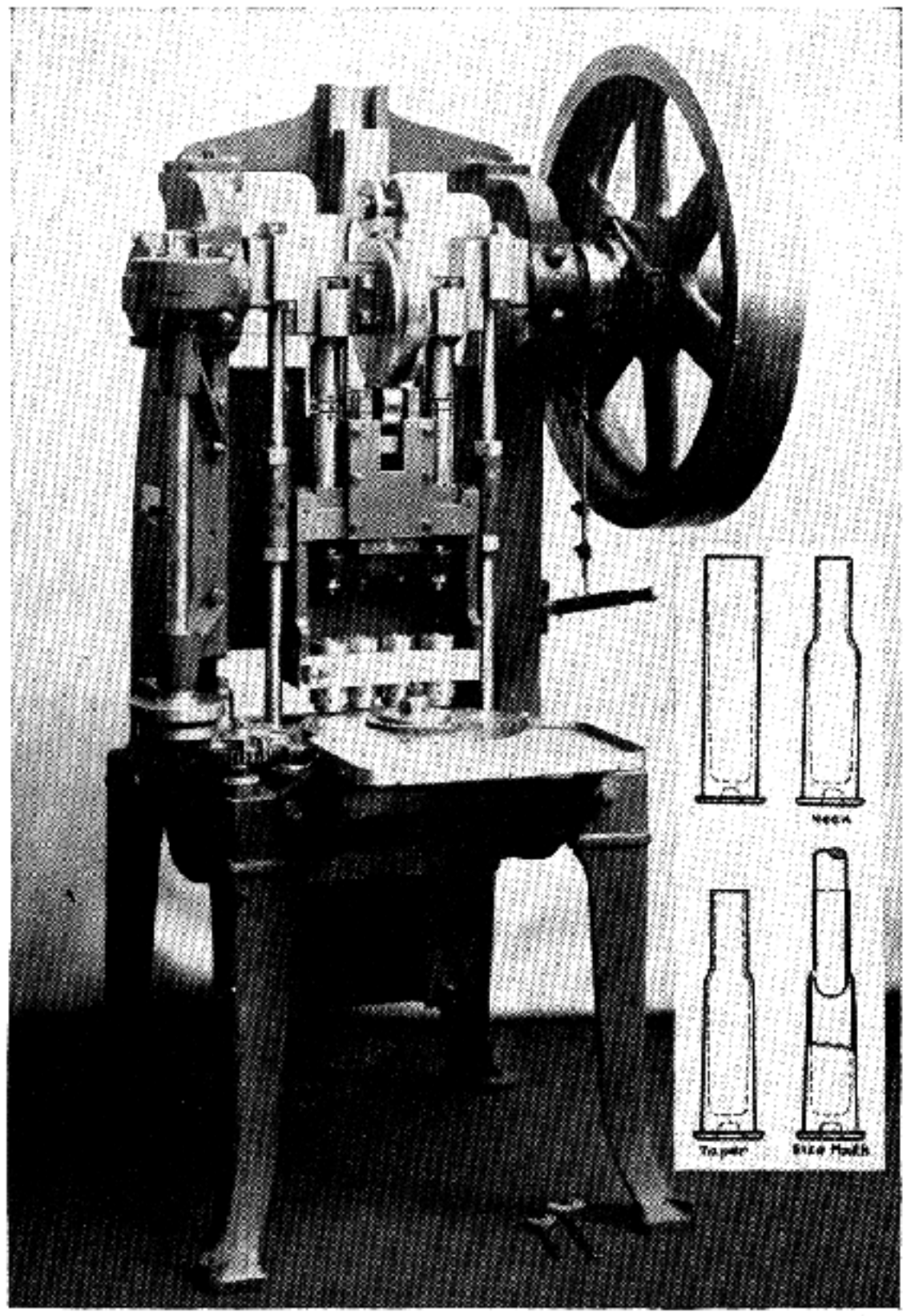

Fig. 163
Cartridge-case tapering machine. This machine tapers the body of the case and sizes the inside of the mouth

volving plate to hold the cannelured head. A circular feed plate feeds the shells against a device which locates the cases in the revolving plate, and then brings them under the operation of the dies. This press has two cams located on each side of the crank, which are for the purpose of holding the cases down by rods resting against the bottom. The effect of the cams allows the cases to be held on the plate long enough so that the dies are released. Considerable pressure is required to release the dies off the body of the case after the tapering takes place, and the only practical manner is to have these rods bearing against the bottom web with sufficient pressure so that the dies will be released without any effort upon the descending stroke.

Second End Trim — The cases are now given the second end trim. This operation trims the case to the exact length and the mouth of the case on the inside is chamfered. The machine is automatic throughout its operation. As the cases come down the feed tube they are set in an upright position and moved under the fast revolving head which carries small high speed cutters. This descends very slowly and while in the cutting position fine chips are turned directly off the face at the end. The small chamfering tool follows it down and when the full length of travel is reached the head travels up, at the same time ejecting the finished case, and a new one is carried into position.

Point Anneal — The point annealing process now takes place. This operation is performed on a machine similar to the one shown in Figure 162 for the body anneal, except that the extreme end of the case passes through a series of fine flames from small gas jets, and the neck is annealed up to the shoulder. The distance from the mouth to which the end is annealed is important, and is controlled by the adjustment of the length of flames.

Inspection — After the second end trim the cases are washed and given a water polish. The shells are now completed and are sent to the inspection department, where they are viewed to eliminate those containing any defects by careful visual examination on a special automatic machine. The cases are fed along a worm, and a mirror is set at an angle in the back; a mirror is also placed in front of the worm in such a position that it is possible to view the base and primer pocket to detect the absence of flash holes or the closing of flash holes by burrs on the inside. A powerful electric light is set in such a position that the case looms up very clearly in the mirrors.

Primer Inserting — Primer inserting and the varnishing process follows, which is also performed on an automatic machine. This machine is unique in design; the cases are fed into dies in a large circular plate; the primers are fed over the cases by a small revolving friction plate setting the primers in place. It makes a given turn so that the primer-inserting punch comes down and seats the primer to the correct depth. While this takes place the mouth is varnished on the inside, and when the

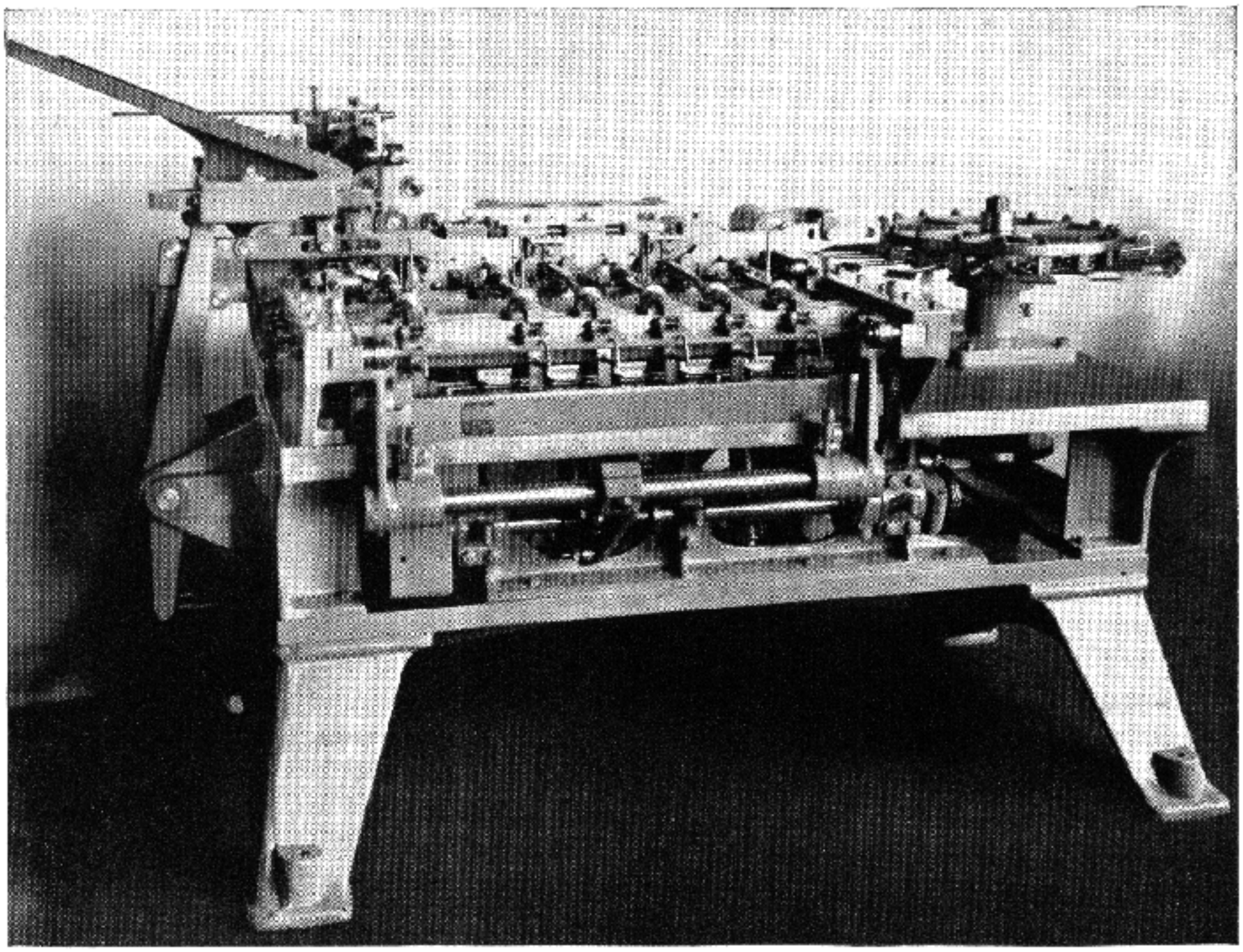

Fig. 164
Machine for gauging and weighing the assembled cartridge

case reaches the opposite side the primer is varnished, making a completed cartridge case ready for loading.

Case Hardness — The cartridge case is made slightly smaller than the rifle chamber into which it fits. When the explosion takes place the internal pressure expands the case, and if the brass is very soft it will not spring back sufficiently after expansion to prevent its adhering to the walls of the chamber. This leads to extreme difficulties in extraction, and the case is liable to blow out the rear when external pressure is at its peak. On the other hand, when the brass is harder, it springs back extensively after expansion; therefore the extraction difficulty is avoided; but hard brass is more likely to split or crack during the expansion. Hard cases used for rifle work do not perform as satisfactorily in machine guns as cases made softer for this purpose. A case made for machine-gun use can be employed for rifle purposes, but extreme hardness is not good practise in any cartridge case.

Degrees of hardness vary at different parts of the case. The case should be hardened at the head or base end, and graduallly get softer toward the front. It is softer at the rear end, which is chiefly responsible for the extraction difficulties one often experiences with some makes of ammunition. If the front end of the case is too hard, there is greater difficulty of internal stress in the metal, and the brass is liable to split spontaneously in course of time. These splits are termed season cracks. The hardness about the center should be intermediate between that of the base and the neck. An unsuitable distribution in the rate of hardness may lead to fracture of the case in extraction, particularly when a rifle has the maximum head space. Extensive and careful research work was done in the laboratory at the arsenal on the question of the ideal hardness for different portions of a cartridge case, and was determined upon for future defects, or as near as it was possible to decide, provided the metal is not at fault.

The instrument most commonly used for making tests of the hardness of cartridge cases or any other form of sheet metal, is a special form of Brinell hardness-testing machine. The operation consists of measuring the diameter of the depression caused by a hardened steel ball of given size after the application of a known weight. The Brinell hardness number is the figure obtained by dividing the load into kilograms by the area of the depression in square millimeters. As the Brinell hardness number obtained with any given material depends

on the size of the ball and the weight used, comparative results can only be obtained where one combination of ball and weight is used throughout. In the case of small-arms ammunition, where the materials are thin, it has been found convenient to use a 1-millimeter ball and a weight of 10 kilograms.

The ideal hardness of a cartridge case as indicated by this scale is as given below:

DISTANCE FROM BASE IN INCHES	BRINELL HARDNESS FIGURE
0.15	145 — 155
0.2	140 — 150
0.3	140 — 145
0.7	130 — 140
1.2	125 — 135
1.6	110 — 120
At Neck	90 — 95

As it has been explained, the making of a cartridge case consists of blanking a disc out of a sheet of brass and forming this into a shallow cup. The cup is then drawn through two dies by a punch to reduce the walls and make the cup much longer, and this operation is repeated until the original blank becomes a long thin tube closed at one end. The end is then headed, the primer pocket formed, and the entire case machined and tapered by other operations until it takes the outlines of a cartridge case. Brass when pressed or rolled or otherwise worked when cold and distorted becomes harder and more brittle, until it becomes impossible to work it any further. It must then be softened by the process of annealing, which consists of heating it at a suitable temperature and afterwards quenching it in water or allowing it to cool slowly. The ultimate hardness of the various parts of a cartridge case is regulated by the arrangement of the operations, which are so figured out that the amount of distortion to which each part is subjected subsequent to the final annealing, produces the degree of hardness required. It is probable that the ideal hardness of the finished cartridge case at the various points cannot be obtained by any method without applying laboratory exactitude, but with careful control of the processes of manufacture, and of the annealing, the desired results will be achieved within reasonable limits. It will, therefore, be clear that variations in the annealing produce different effects on the quality of the finished cartridge case, and that careful annealing is very important. The amount of softening obtained in a given time is greater if the annealing is done at a higher temperature, but a temperature of 1350 to 1400 degrees Fahrenheit is not permissible, as the brass may become "burned" and its structure destroyed.

Owing to the importance of all the annealing operations, the temperature of the annealing furnaces as well as the body- and point-anneal devices, should be carefully watched, and test pieces removed from all the furnaces to check on the pyrometers. The test pieces should be submitted to the Brinell test, polished, etched, and their microstructures examined. Such a method of examination affords a ready means of judging the true condition of the structure of metal as well as the temperatures in the furnaces.

Bullet Experimental Factors — The essential factor governing a good bullet is balance—the correct proportions of the component parts—accuracy of concentricity. The greatest errors are often due to manufacturing conditions, which affect the accuracy of shooting. The want of a perfect center and form in a bullet is by far the most serious. Whenever the center of mass is not truly on the axis of the bullet as it travels up the rifle barrel in a spiral, and the bullet departs to the opposite line on which its center of mass happens to be traveling at the moment the bullet leaves the barrel, regardless of whether the delivery is from a perfect muzzle or not, the unbalanced part will be thrown away from the center of the barrel. Should the center of mass be only 0.001 of an inch away from the axis of the barrel, it will cause an error of a good many inches at a range of 600 yards, which was our standard range at the arsenal proof house. Many elements besides that of an eccentric bullet enter into these excessively large targets, as we shall discover later. The various sizes of targets obtained from a series of shots with bullets out of balance or out of true when delivered at the muzzle will often be increased because of this eccentricity. At the high velocity in which a Springfield bullet leaves the muzzle of the barrel, the centrifugal force due to the center of mass of the bullet being eccentric to the axis of the rifle barrel is very large (0.001 inch is equal to about four times its own weight), and this causes the bullet to cut deeper into the rifling on one side and increases the eccentricity, so that a very small error in perfect proportion of the bullet may mean a much larger amount of eccentricity at the point of delivery (the muzzle). The extent to which this happens depends on the hardness of the jacket and various other factors in the bullet-assembling operations, so that extreme concentricity of all tools used in assembly of the bullet is very desirable. "Eccentric cups" in the

bullet jacket are a more serious fault even than similar defects in a cartridge case; extreme regularity in the thickness and hardness of the bullet-jacket metal is most essential.

Cupro-nickel is the metal used in most military bullets, because of its less poisonous effects on wounds. Almost all the sporting types of bullets produced in England and Germany are manufactured from this metal. Good cupro-nickel is essential for the manufacturing of good bullets. Whenever it is too hard or brittle, the bullet jacket is liable to split and break up in flight; and whenever the quality of the metal runs bad there is always trouble to look forward to in metallic fouling in any rifle barrel.

Cupro-nickel is one of the hardest of bullet-jacket metals to produce, one of the principal difficulties being the prevention of oxidization. When the ingots are not correctly made, the metal is spoiled; hence great care is taken in testing the ingots before any attempt is made to roll them into strips. When making cartridge-case brass an analysis of the brass is taken on casting, and from then on the annealing is the most important operation; each batch of metal is identified by its annealing record, but in the process of cupro-nickel it is the practise to take a sample of the ingot and put it through the whole of the manufacturing process. The mills that make it, in fact, should have the proper facilities so that bullets can actually be fired at the ranges to see just how the metal performs; and thereafter such a batch should be graded and identified by the records of its trials from the casting stages to the actual firing test.

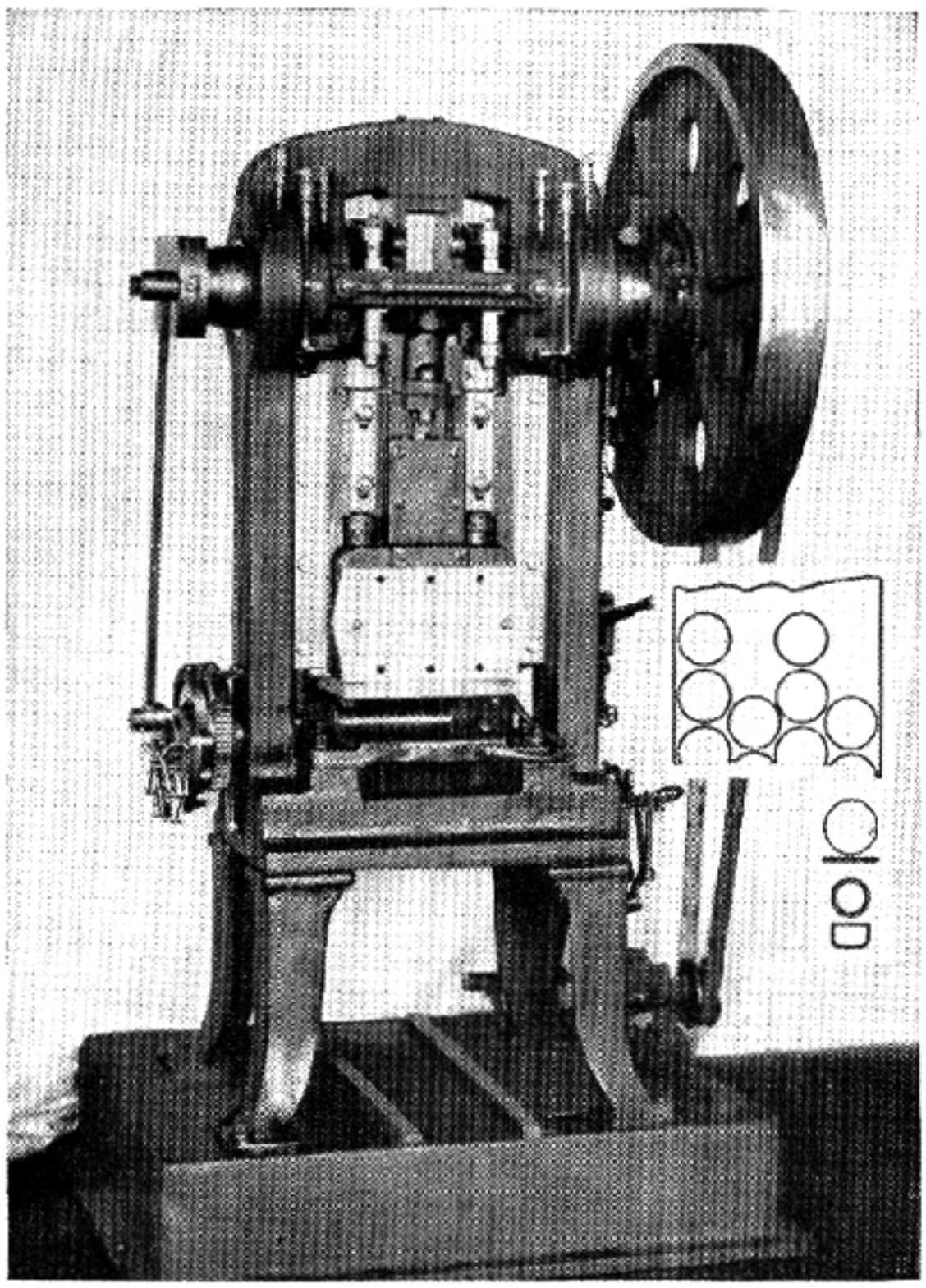

Fig. 165
Double-action press, used to form the cup, the start of a bullet jacket

The annealing of cupro-nickel also requires great care. The temperature should be between 600 and 680 degrees Centigrade, and on no account should it be allowed to go above 700 degrees, as at this temperature the carbon in the alloy, which is always present with the nickel, changes into the graphite state, and the alloy becomes intensely brittle and the metal is spoiled. The prevention of oxidization during annealing is also important. Cupro-nickel which after rolling reaches a Brinell hardness of 180 should, after annealing, have a hardness of from 80 to 90. After each annealing, samples are taken and tested mechanically, and the microstructure examined.

The usual military bullet, and also the more modern sporting type of bullet, are made with jackets. Both bullets consist of a core of lead covered with an envelope called a jacket, which consists of harder material, such as cupro-nickel, copper, or gilding metal, which is a copper alloy. Bullets can be made of soft steel, coated thinly with some anti-friction metal or alloy, by the electro-plating process; this kind of bullet should be employed only when copper is scarce and not easily procurable, due to war and blockade. Lead bullets of the old standard types are useless today, as, apart from consideration of penetration, modern high velocity would cause the soft metal to strip instead of following the spiral of the rifling in the barrel. At the same time a certain degree of plasticity is requisite in order that "windage" may be avoided. Thus a lead core with an exposed or sealed base, combined with a jacket of harder material tapering off to the rear, provides the desired combination.

The steady growth of opinion has brought the boat-tailed bullet forward as an accepted standard. Its purely ballistic aspects are treated later in this chapter, but there are certain other points connected with the design of this class of bullet that deserve special notice. It has been stated that the sealing of the bore is affected in some measure by the "upset" or increase in diameter of the rear part of a flat-base bullet caused by the gas pressure as it is driven through the "leed" or into the "throat" or conical entrance to the rifled portion of the bore, and because of this a certain plasticity is pur-

posely retained. Theory is often advanced to show that certain conditions cannot exist in a boat-tailed bullet on account of the fact that pressure cannot act on the reduced area of the base alone and would defeat the purpose of "upset." The only factor required is a perfect circle at the break from the cylindrical portion to the slope of the taper; there the line must be very pronounced and sharp, also with the correct angle; therefore on such a bullet deformation is not needed to obtain ballistic advantages from "upset."

A boat-tailed bullet necessitates the bullet being loaded deeper into any case; therefore the extreme importance and increased difficulty of insuring exact concentricity of bullet and case where the length of bullet is restricted to a given distance from the end. This is especially true of a bullet of this design; if it requires too great a "jump" before engaging the rifling it is almost certain to be more or less unstable in flight. However, in order to obtain all the advantages of a tapered bullet, it must be parallel to the position and form of the "leed." Such assembly requires the greatest of care with tools, machines, and gauging.

Forms of Bullets — The usual problem is that of determining all the proper shapes of bullets and pointing out the various factors which must be avoided in general practise. The trajectory of a projectile depends upon many factors, such as the components, the initial velocity, its weight, shape, estimated value of spin, the density and temperature of the air, the direction and velocity of the wind. Most of these factors are capable of taking many values. If tables were made covering all cases, they would depend upon as many arguments as there are variations; however, if there were only ten different bullets to be considered, with ten different weights, and if all other factors were constant, then tables could be made and a standard could be arrived at; but to enumerate all would require many chapters and years of study.

Let the shape of the ogive be first considered. Photographs of bullets in flight show that immediately in front of the projectile moving with a high velocity there are cylindrical condensations of air whose diameters are sensibly equal to the diameter of the bullets themselves. This would hold true whatever the shapes of their noses or ogives, as

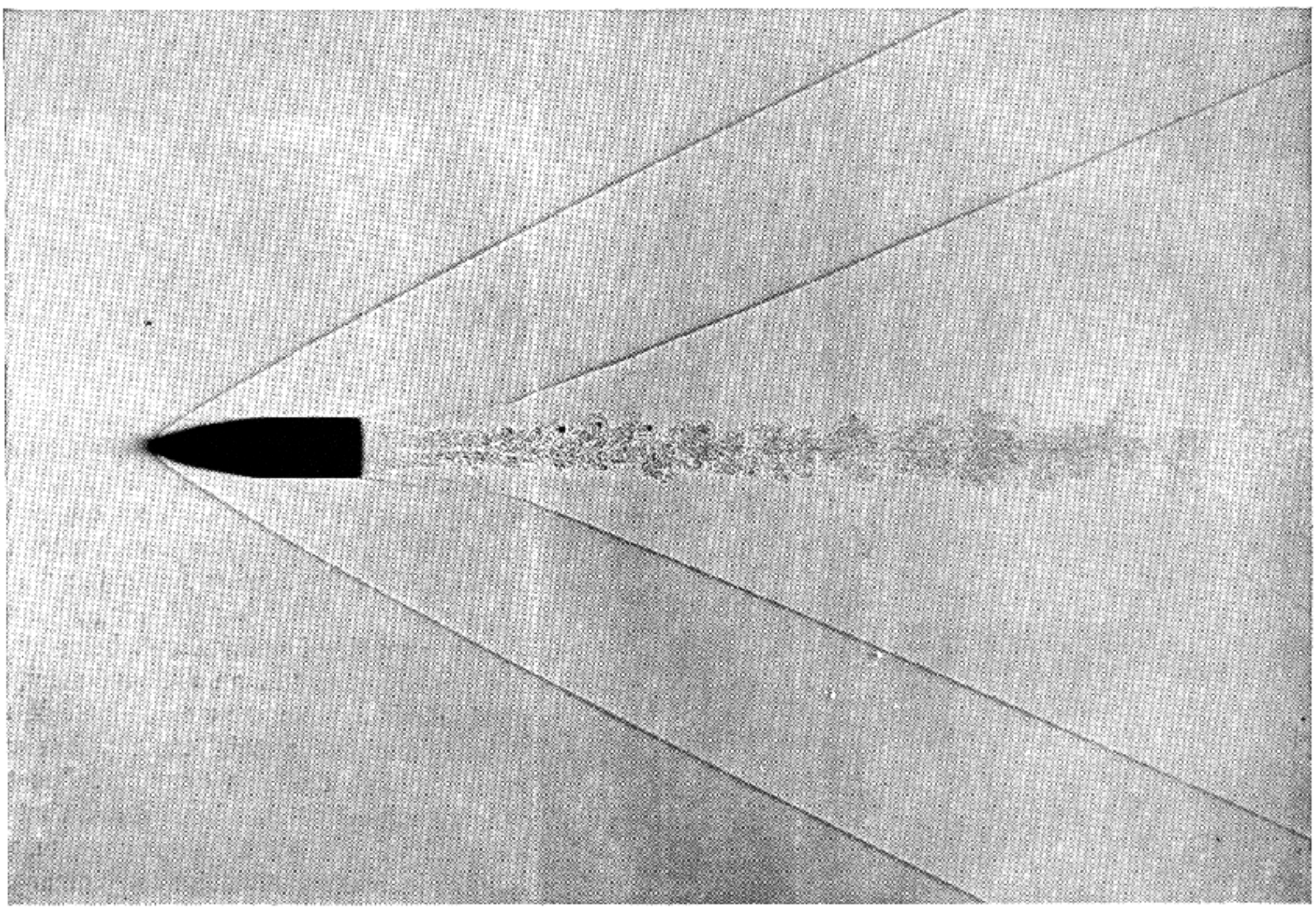

Fig. 166
Caliber .30 flat-base bullet in flight. The two lines at an angle from the point and base are the parting of air as the bullet travels in space. Note the difference in air resistance at the base of this bullet as compared with the boat-tailed design shown in Fig. 149

shown in Figures 149 and 166. Not only is it true when bullets move forward, but also when they move slightly obliquely. This would mean that the points act sensibly as rough bodies, probably because of the high velocity penetrating heavy saturated air. This conclusion respecting the retardation of a bullet as a function of the shape of its nose is illustrated in Figure 167.

"jump" and "vibrations" and other small oscillations of the bullet as it passes down the bore. Therefore, the subsequent motion of the bullet depends not only upon the magnitude of these various rotations as it leaves the barrel, but also upon its dynamical properties. If it has such properties of inertia and spin that its oscillations can be measured, even within small limits, under the conditions

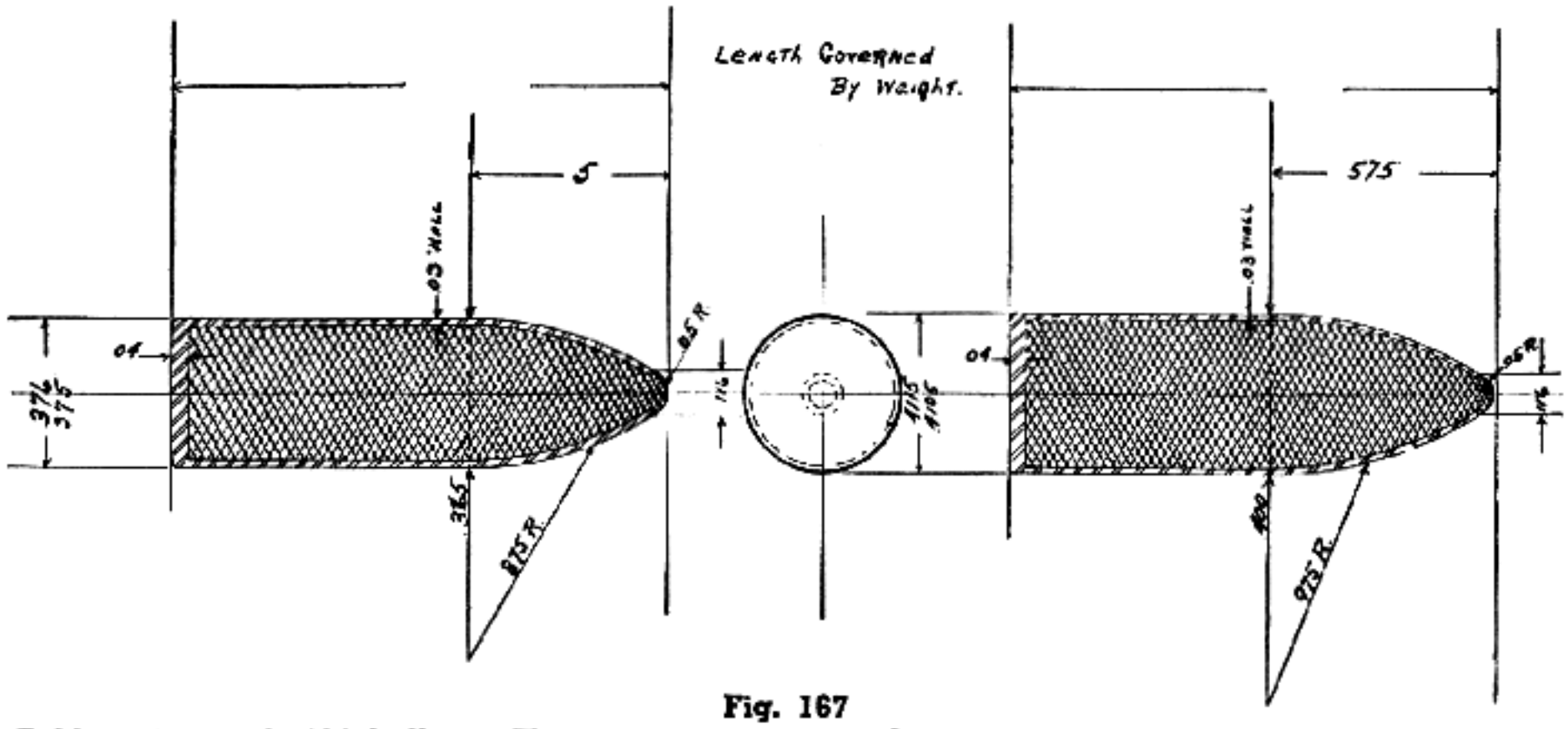

Fig. 167
Caliber .375 and .404 bullets. The nearer we approach to great cross-sectional area, the better the kills in a sporting type of design

Bullets must be designed with three or more calibers for an ogive. Most bullets made of lead had noses of one or two calibers, but because of increased velocities and the demand for increased ranges the ogives were increased in length and given a metal jacket. The assumption on which results are obtained represents the physical facts only roughly, yet the results agree fairly well as you advance in experience. But it must not be supposed, if a five-caliber radius gives good results, that a ten-caliber would give correspondingly better results; for there is a danger of bullets becoming unstable when their ogives are greatly increased in length. However, the loss of energy in tail waves does not diminish as the ogives are increased in length. Consequently, Figure 166 gives only a rough indication of what would be found; but experience would prove the facts. The momentum is imparted to the whole mass of air encountered by the ogive while the bullet moves through space. It is not difficult, in view of the above facts, to figure out the conditions which must be satisfied by the surface of the ogive to give minimum air resistance.

When a bullet leaves a barrel under normal conditions, its axis will very nearly coincide with the direction of motion; it will then have a rapid spin about the axis, imparted by the rifling in the barrel, and it will also have much slower degrees of rotation about the axis because of such factors as the prevailing in the firing of the bullet, it will be said to be "stable." On the other hand, if it has such properties that, except in special initial conditions, it will oscillate erratically, it will be said to be "unstable." Only actual firing trials can reveal the ideal combinations in components, bullet assembly and proper balance.

How to make a perfectly balanced and designed bullet will always be an open question. Those who experiment upon bullets usually try to improve upon an accepted standard or upon certain existing conditions. True, there is a large field in which to bring out a better product; but the experimenter must use various metals and alloys, assembling them in such combinations that perfect balance and symmetry are the paramount issue. The specific gravity of a metal must be first considered. We cannot expect to use gold or tungsten and secure the same results as with copper, even tho given a high velocity, when copper alone is employed to secure distance of range. Still, gold might give the desired accuracy, but the angle of departure would be too great; therefore, what is required is nearly a flat trajectory instead of a large arc. Certain combinations of metals can be employed, making what is known as compound bullets. The British Service Mark VII bullet is an example of the manner in which the compound bullet enables weight to be reduced without a corresponding reduction in

length. In such a bullet, the lead core is at the rear, while an aluminum tip is placed in the point. The weight is 174 grains, as against 196 grains for a bullet of equal dimensions but with a solid lead core.

The tip of any bullet can be filled with any lighter material, not necessarily aluminum; for instance, fiber, hard rubber, or compressed paper. The experimental determination of the flight of such a bullet must be well worked out in order to have the lighter metal at a given weight; therefore the resistance offered by the air to such a bullet depends, in the first place, upon targets secured in every fifty yards up to one thousand yards, by shooting ten shot groups from a machine rest. The results will indicate the most suitable weight of tip to use. Then we take into consideration the chief factors that determine the trajectory of a given bullet in flight; after which we must consider the components of initial velocity, the acceleration of gravity, the normal retardation of the atmosphere. In addition, however, there are many minor factors, such as winds and abnormal air densities, and these vary with time and location, and cannot be determined by theory alone.

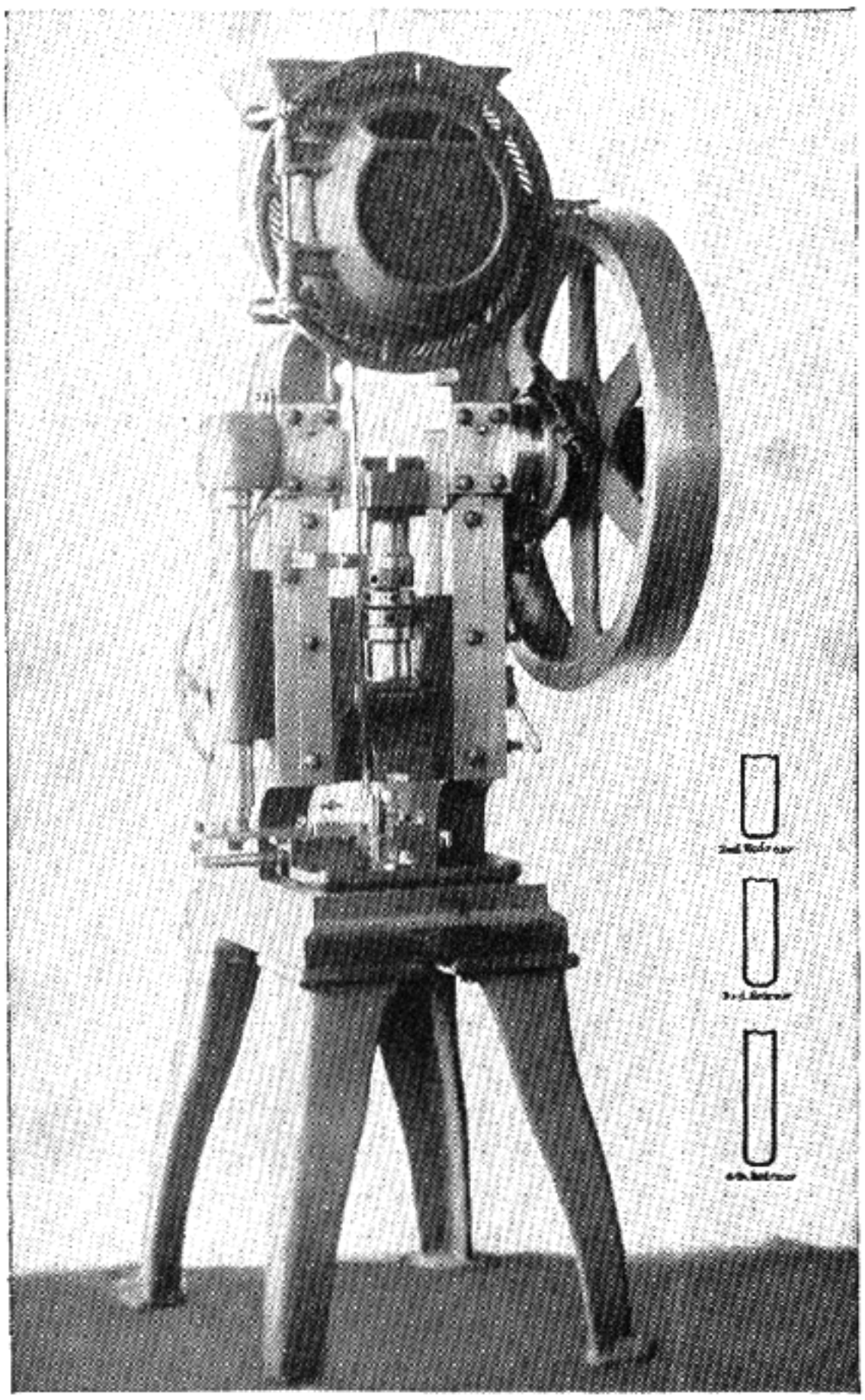

Fig. 168
Bullet-jacket draw press for second, third, and fourth redraws

Bullet Weight — Bullets of a given type are supposed to have a standard weight, but there are actually some variations due to tolerances permitted in the manufacture. However, in the experimental tests, the projectiles should all be of a given weight and only have a plus or minus of one grain. Select, as an example, a number of bullets to weigh 172 grains, the next lot 173 grains, and the next 171 grains; 172 grains is the mean figure, and the other two figures are the plus and minus from the mean. Two grains in weight as a manufacturing tolerance is sufficient, and any well regulated machine can or should produce bullets within such wide limits. If a bullet is overweight, its initial velocity is reduced by a certain amount, naturally depending on distance and its normal velocity, the gun and the powder charge. The relationship is established by experimental firing. There is consequently a change in the initial condition, whose effects are determined by methods established at a well organized proof house.

Normal trajectories are determined under the belief that the air is stationary with respect to the surface of the earth; but there are nearly always winds, and even vertical currents, sufficiently strong to modify appreciably the flight of bullets. It is necessary to regard their effects as abnormalities that must be taken into consideration by means of weighing factors because of their ever-varying character. There are, in fact, usually considerable variations of air currents, in both velocity and direction, at different altitudes above the surface of the earth.

Explosive Bullets — The term "explosive bullet" was used in the days of black-powder, large-bore rifles, to designate a large lead bullet in the nose of which an explosive element had been placed, this acting on impact. Today, with our high velocities, an explosive substance is not necessary. All that is required is an open point in any bullet; an explosive effect follows as soon as such a bullet strikes flesh. Whenever additional stopping power is obtained by exposing the lead core, or by drilling into the end of any full metal-patch bullet, or by weakening the jackets at the nose in various manners, such bullets are correctly described as expanding bullets. The destructive effect on bone and tissue is greater than that caused by a full metal-patched bullet, and it is an effect very differ-

ent from that of a bullet opened by the explosion of an internal explosive element.

In order to make the discussion more concrete in the matter of expanding bullets, consider the practical side of their use and their determining effects. One of the first factors to be considered is distance: the thickness of the jacket must be such that the same expanding effect can be secured between one hundred and three hundred yards. The relative simplicity of construction does not make such a bullet effective until tested out for complete efficiency upon not only live but dead tissue at various distances. In fact, a complete knowledge of the effects would require extensive study with various weights and diameters of bullets.

Explosive bullets were designed and used in the World War by different nations, chiefly against aircraft and observation balloons; but when one is made for a small-bore arm the construction of component parts becomes the same as making a watch; therefore the smallest size worth considering is a .50 caliber; any larger caliber becomes artillery ammunition.

We designed one at the Frankford Arsenal known as the .50-caliber spot-light bullet, one of the most successful types of explosive bullet. This bullet has the supersensitive nose which is capable of exploding upon impact on tissue paper. The name spotlight was derived from the phosphorus which it contained in the base. To make a true explosive bullet, the base could remain sealed and the high explosive element could fill this cavity.

The practical importance of obtaining the desired efficiency of such a bullet and the factors governing its experimental use is only to prove certain destructive forces, and to determine the variation with the more easily constructed expanding bullet. It is obvious from this discussion of expanding and explosive bullets that the practical use of the latter would be in warfare alone; but the former is practical for the big-game hunter, particularly one who must face dangerous animals. In establishing effective results one must choose a large-caliber bullet and besides must consider the rifle with care; a double rifle with a practically designed bullet, duly proved by one's own experiments, is probably the most desirable.

Bullet Design — The history of the evolution of rifle bullets is so intimately associated with that of weapons that a detailed description of its development would involve a great deal of unnecessary repetition. Very few men care for a detailed description of the past designs of bullets, altho this might be interesting to a certain extent; the modern mind is most keenly interested in the appearance of new ideas from the experimental laboratory whether in the large manufacturing establishment or in the basement shop of the creative amateur.

Altho low trajectories and light fixed ammunition are eagerly sought today, experience indicates that the existing limits in calibers are likely to create a separating line between large and small calibers, giving us heavy bores not greater than .375 and small calibers from .30 down to .15 in size. Today we have calibers in the large bore from .375 to .600 and the small calibers run from .350 to .22. Bullet weights average from 40 to 900 grains.

The claims of the boat-tailed bullet are firmly established, with the exception of the lead bullets universally used in certain small-bore arms. Gilding metal or pure hardened copper jackets are fast replacing cupro-nickel in sporting bullets. There may be found a satisfactory soft steel which can be worked as cupro-nickel or copper, and if it is, it will be one of the standard envelope materials of the future.

One of the most important considerations in bullet design is to advance in the direction of boat-tailing, as before stated. This should be termed "stream lining," as we are applying this principle to motor-cars, buildings, boats, etc. In the United States we must express the subject in the most advanced manner, using modern terms. During the development of this bullet at the Frankford Arsenal we early learned to recognize the ballistic advantage of the rear taper. Our first trials in the use of boat-tailed bullets were not what you would call a success, so far as the desired accuracy was concerned; but this was due to not having the proper machines or the correct tools; after these were developed, accuracy was obtained.

Boat-tailed bullets should be employed for all match shooting. Men who limit themselves to service standards as regards the caliber .30 Model 1906 ammunition, using sights and methods of exceptional merits, should interest themselves in exploring the possibilities offered not only by the improved bullet, but also as regards the chamber, barrel, and cartridge case itself.

Knowing the present trend toward flatter trajectories—toward lighter bullets propelled at high velocities—one must first become reconciled to the theory, and then secure actual results by experimenting. Along with the development of high-speed bullets it seems desirable that we should learn something more definite about designs from actual firing trials, by using bullets first turned from solid brass, copper, soft steel (coated with some anti-friction alloy before firing through the barrel), bronze, etc.

In spite of much care and forethought the experimenter will encounter many failures when designing any new bullet and testing it at the range. Knowing that the greatest range of calibers is between .25 and .375, it is best to confine the various designs to bullets in these bores in the high-velocity class; therefore we have these calibers to make our selections from: .25, 6.5 mm. or .256, .270, 7 mm. or .276, .275 Magnum, .280, .30, .303, 8 mm., .318, .350, .375. The reasons for the above choice are to be found in the cartridge cases to accommodate the bullets designed.

There are two cartridges using bullets from 70 to 100 grains which may have an opportunity to present themselves for certain improvement: the .22 high power and the .242 nitro express. In spite of the record performance of bullets of this type, it can be considered that their use, except only in an extremely limited degree, is still an experiment. Small-bore high-velocity bullets, if not designed from accepted standards, are likely to lead to many disappointments. Military bullets are designed to serve a definite purpose, whereas a bullet designed for sporting purposes has unlimited possibilities. Unfortunately, a great deal of misconception exists regarding the correct interpretation of ballistic data in bullet design, which results in disappointment from various angles, often due to the gross overtaxation of the capabilities of even the most efficient small-bore bullet.

The United States, Switzerland, Germany, and France are the four nations that have made the boat-tailed bullet an accepted standard up to the present writing. France uses a solid bullet of a copper-zinc alloy, whereas Switzerland and Germany use one composed of a jacket and lead core. All the other nations use flat-base bullets with either a spherical or an ogival point; the latter is by far the most popular. The wounding power of the military bullet is considered satisfactory from the humanitarian point of view. The effect of the blow imparted is sufficient to place men out of action in many instances, when vital parts are not penetrated; but why bring such philanthropic thoughts into consideration, when other destructive agencies are made with far more deadly effect?

The .30-caliber boat-tail bullet now used by the United States Army, with its great velocity and penetration, makes its impact hard to feel in many cases, and its track through the body is a clean puncture without circumferential damage of any kind. Unless bone be hit, therefore, stopping power is lacking. Warfare is horrible at its best, but it is war, and there is no reason why small-arms projectiles should not be as deadly as other agencies of war, placing men completely out of action. Warfare cannot be considered civilized, and why rule out certain small-arms projectiles because they are more deadly? Observation of actual wounds from small-arms bullets in battle would seem to be the best means of settling this question, tho many other factors enter into it. The finding would no doubt show that the more deadly effects of the expanding bullet completely eliminate the suffering caused by modern bullets. Many instances have been known of soldiers constructing their own expanding bullets by filing off the points and exposing the lead. Rubbing off the point of any bullet on a rough stone is sufficient to make it one of the most deadly of expanding bullets.

Designs — The designer of modern bullets will find it necessary to emphasize the fact that no matter how much skill and care are given to the designs, his labors will be wasted unless the powder is carefully selected and developed with careful understanding. The designer of small-arms projectiles is confronted with various problems and surrounded with various restrictions—many of which can be safely disregarded.

It has been assumed that the axis of the rotating bullet is always parallel to the tangent of its trajectory. Under this ineffective assumption it was sufficient, in treating normal trajectories, to consider only the acceleration of gravity and the retardation of the atmosphere in the direction opposite to that of the motion of the bullet. While this is not a solution of the whole problem of the bullet's motion, it is a good approximation to it in the case of a well designed bullet, and results in a great simplification in the trials. This is advisable, particularly because it is necessary to secure an insight into the physics of the problem, and then to develop the analysis so that the physical constants can be determined from experiments without serious difficulty. Furthermore, the problem will be so analyzed and treated that the principles determining stability and related questions will be clearly brought out and put in such a form that they can be used in the design of any bullet.

The modern bullet components consist of a jacket or envelope of harder material, and the lead core usually consisting of nine parts lead and one part antimony, or eight parts lead and two parts tin. The bullet must be made so that when it is assembled, and the envelope turned over at the base, the lead will come flush; therefore weight alone governs this component.

Having completed the operations to this stage, the design can be carried out to any desired form which will prove the most suitable for accuracy, whether flat base or the end given a taper of any

degree. Since it is obviously necessary to boat-tail the base for better ballistic values, it is better to carry out the design in that direction.

Armor Piercing — Modern military requirements also include armor-piercing, tracer, and incendiary bullets; the basis for the envelope is the same. The armor-piercing bullet is designed for greater penetration than that of the ordinary service bullet, as it is not possible with a caliber .30 bullet to penetrate certain thicknesses of plates, or armor carried by tanks, armored cars, aircraft, etc.

It is found that the greatest penetration is obtained by a hardened steel bullet inserted in an envelope. Therefore, the design takes the form of a hardened steel core enclosed in a jacket which enables the bullet to take the rifling. A lead point is provided between the point of the core and the end of the jacket, this acting as a lubricant upon impact for the core when harder plates are encountered as well as plates placed on various angles. Extreme accuracy, therefore, is not essential, as there is little advantage in the use of such a bullet over 1000 yards.

The penetrating force of an armor-piercing bullet depends almost entirely on the striking energy of the steel core. Both the weight of the core and the velocity should, however, be as great as possible. The weight of the core can only be increased by making the core diameter as large as possible, and this means that the wall thickness of jacket must be made as thin as possible. High velocity also involves high pressures, and an armor-piercing bullet is therefore found to put great strains on the rifle or machine gun, and owing to the hardness and rigidity of the bullet it would no doubt cause excessive barrel wear. The total number of armor-piercing bullets fired from any rifle or machine gun during its life is not necessarily great, however, and the cumulative destructive effect is not likely to be serious.

The form of the core to some extent affects its penetration. A pointed core gives better results upon normal impact than a flat-nosed core, even on oblique angles. The ogive of the core's point is, however, chosen for the best all-purpose performance. At longer ranges the ballistic efficiency is of importance, and the external ogive and boat-tailed angle is also of particular importance, so that the velocity is reduced as little as possible by the resistance of air. With cores made of 3½ per cent tungsten steel, and given the proper heat treatment, this bullet should penetrate an armor plate which would measure 0.35 inch in thickness at 100 yards, practically every time hit.

Tracer Bullets — These are so called because they leave a visible wake or "trace" behind them, so that the correct range and object can be found, particularly when fired from an airplane or when fired from a rifle, as the trajectory can be seen. They are used to ascertain visually where the bullets are going, with the object of correcting the aim, and it is therefore essential that tracer bullets should have approximately the same trajectory as other service bullets. Unfortunately the trajectories of the ordinary service and armor-piercing bullets differ somewhat, owing to the greater velocity of

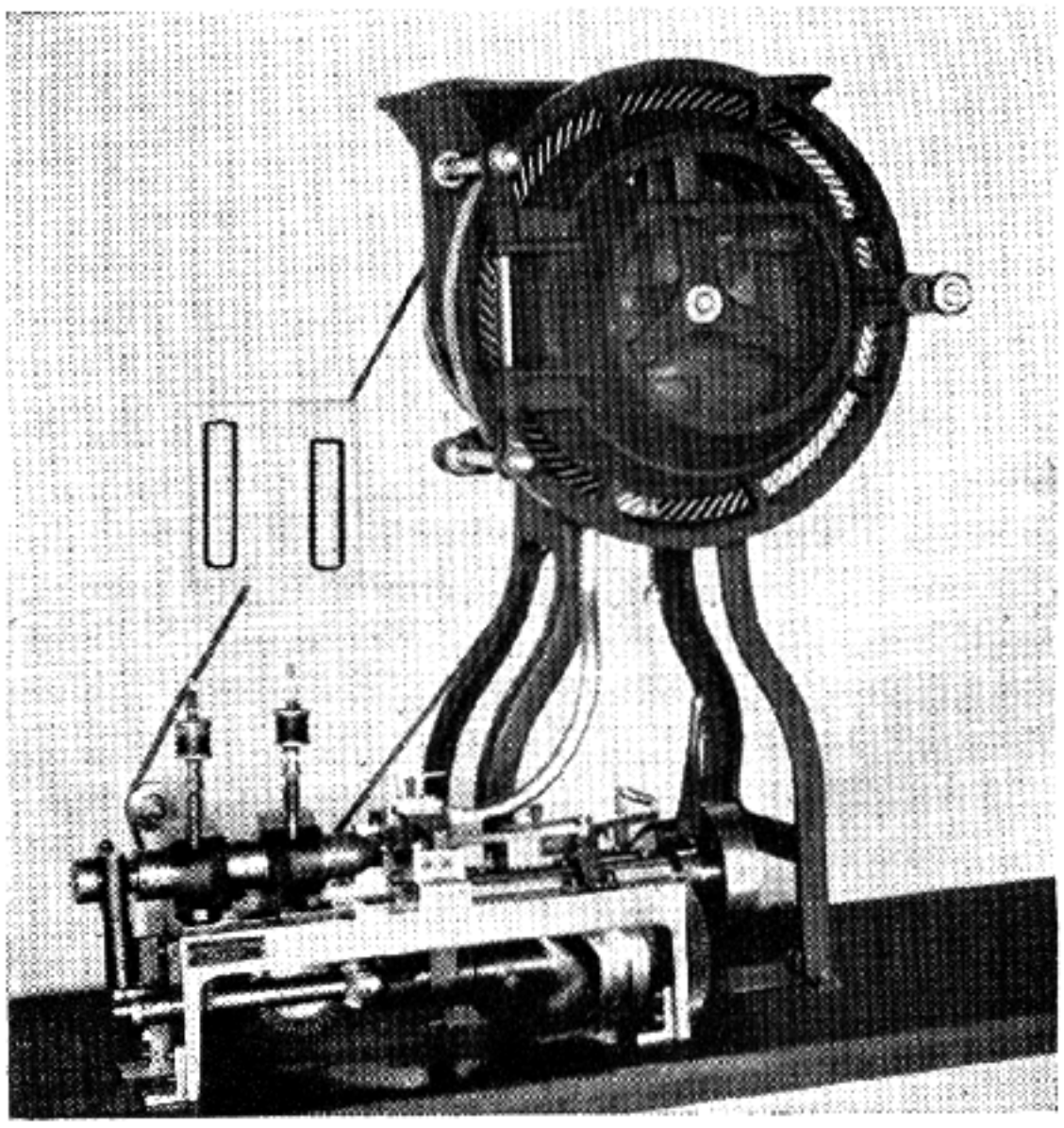

Fig. 169
Automatic-feed, bullet-jacket trimming machine

the armor-piercing bullet, and it is not possible to imitate the trajectories exactly.

The trace, or trail of fire, is obtained by filling the bullet with a composition which is ignited by the powder gases when the explosion takes place, and which burns during the flight of the bullet. From the time the projectile leaves the muzzle until the composition is completely consumed the bullet is continually becoming lighter, allowing more weight at its point. The curve of its trajectory is consequently not the same as that of an ordinary service bullet, whose weight does not change. It is possible, however, to design and make a tracer bullet which, up to a range of 1000 yards, has a trajectory sufficiently close, for practical purposes, to that of the service bullet. Armor-piercing and incendiary bullets do not differ much in trajectory up to this range. Beyond this range the path of the bullet is erratic, but this is of no great con-

sequence as the tracer composition is about consumed.

The caliber .30 tracer bullet used for the United States air forces is composed of an envelope, lead point, and copper-alloy composition cup; but the modern design would be to apply a boat-tail to the bullet for better ballistic results. The composition cup and lead point are assembled first on the bullet-assembling machines, and then the bullet is placed in a loading die and filled with a mixture of barium peroxid and magnesium powder. A punch is then put over the composition in the die, and placed in the loading press, and the composition reduced to a solid under pressure. After loading, the bullet is given the taper to its base, then loaded into the case, the tracer composition being ignited by the flash of the powder.

This bullet may be used in all types of caliber .30 Model 1903 arms, and will function equally well in all. When fired for accuracy at 600 yards from a fixed rest, all the shots should be in a four-foot circle—a performance which may be equal to the armor-piercing but which does not compare favorably with the service bullet. A tracer bullet is very destructive to the barrel in which it is fired. The bore rapidly becomes eroded, and there is a tendency for the inside to become coated with a hard metallic deposit which is not easy to remove when it is left in for more than a short time. The most satisfactory way to clean the barrel of this deposit is to fill it with the powder solvent given in Chapter XXV. When firing tracer bullets it is desirable to fire armor-piercing and incendiary bullets at the same time, using these alternately, five rounds of each type, as this has a decided effect in reducing the residue left by the tracer composition.

Incendiary Bullets — Altho it was necessary to design a bullet with which to set fire to objects hit, such as airplanes, dirigibles, etc., during peace times such a bullet is not required. The term "incendiary" refers to a bullet capable of burning or doing great damage by fire. Phosphorus is the agent employed to accomplish that purpose. A small hole $\frac{1}{32}$ inch in diameter is pierced a given distance from the base, and is sealed with a soft solder capable of melting at 150 degrees Fahrenheit. The object of this hole is to allow the escape of the gas produced from the phosphorus as the bullet is passing through the barrel and through the air. As the phosphorus is in a liquid state, this vent acts not only as a pressure escapement but also as a trace to indicate the true range. Of course, it is rather hard for the eye to pick up the phosphorus smoke during a high wind, but on a calm day the smoke spiral gives an interesting view both of the spin of the bullet and of the line of the trajectory.

Upon impact this bullet breaks up, causing a large burst of flame and completely igniting any inflammable material with which it comes in contact. Nevertheless, it is possible to design an incendiary bullet which, up to a range of 1500 yards, would be capable of doing considerable damage with a trajectory sufficiently close for practical purposes.

A bullet designed with a soft soldered point and with the phosphorus located in the center could be used as a spot-light bullet. The purpose of such a bullet would be the quick location of machine-gun fire. It would be used for military purposes alone, and would be required only in time of war; therefore when the necessity comes for such a bullet the army will call for its manufacture.

All the above-described bullets have been made with a bullet jacket or envelope. The only parts which have changed are the substances of which they are made under the various headings. These special bullets may be divided into separate categories, according as they are most suitable for use in the various machine guns and service rifles. Armor-piercing, tracer, and incendiary bullets all are important for use in aircraft machine guns. Therefore it is correct to state that bullets referred to under this heading are specially designed. However, considerable improvement can be made in their design; therefore it is a hard matter to state just what the wars of the future may bring forth.

Expanding Bullets — The results recorded by big-game hunters often deserve critical observation, particularly if they state the type of ammunition and make of bullet used. The endeavor of the big-game hunter is to kill completely and effectively, yet without destroying the meat or marring the beauty of the trophy. He must therefore choose the bullet that has the greatest wounding power, and is known to penetrate, but will not break up or traverse the body of the game. It must maintain its gradual expanding qualities until it spends itself and can be found lying flattened in a mushroom form against the skin on the side opposite to that of entry. The big-game hunter, to be sure, understands the difficulty often experienced with a small-bore arm, in clean kills. With the increased accuracy and flatter trajectory no caliber should be used less than the caliber .30 with a 180-grain bullet of the expanding type, to be driven with a muzzle velocity of 2800 f.s. or even higher.

Experience has taught us that it is difficult to design a bullet which will be as efficient at 50 yards as it would be at 300 yards with the selection of modern designed factory ammunition. Therefore,

in order to accomplish that object, we should design a bullet with a flat nose and an open point in the center of the end. The lead core, instead of being a solid piece, takes the form of a number of sections made of two kinds of metal, one section of hard material, such as copper, and one of metal composed to nine parts lead to one part antimony. Fine saw slots are placed at four points on the ogive; three, in fact, would be sufficient. The object of a bullet designed in such a manner would be, first, penetration, and secondly the holding together of the bullet after the envelope begins to open up due to the two different alloys which compose the core. The lead sections would disintegrate while the harder metal would hold together without breaking up in particles, therefore paralyzing nerves and destroying tissue in a large area. Such a bullet becomes more "humane" in its kills. Under these circumstances the caliber selected should be .30 or larger. The wounding power of such bullets would depend upon the velocity and the effect of the blow struck. Penetration would be assured, and the question which would arise would be what caliber to select for the most dangerous game. A bullet so designed is rather expensive to manufacture, but expense is a second consideration as compared with dependable kills.

The second type of expanding bullet would be one with a step on the ogive. A jacket is selected and formed with a step in the center of the contour. The object of such a design is the destructive effect in tissue and greater penetration. To make such a bullet more effective on ranges longer than 100 yards, drill a $\frac{1}{16}$-inch hole in the point just through the jacket to the lead core. It has already been pointed out that in the pointed bullet the soft lead core is covered with an envelope of various alloys, and therefore cannot expand on impact where a soft substance or tissue is hit. The only method of obtaining the increased destructive effects in the area hit is to shatter the tissue and nerve centers, bringing death instantly. The use of such bullets in warfare is therefore forbidden by international agreement.

The increase of area on impact of any bullet must be in a direct line. Giving a bullet considerable length in proportion to its caliber will cause it to become unsteady, so that it will often move sideways through tissue. A bullet similar to the 6.5 mm. would be very unstable on impact; therefore, when calibers are reduced we must shorten the bullet in proportion. Length seems to be the chief cause of unsteadiness in a bullet. Often the pointed bullet presents the same unsteady characteristics, due to making the ogive too long and throwing the center of gravity too far back. Unless the ogive is accurately in the line of trajectory, it immediately, on impact, takes on the motions of a top losing its momentum and becomes erratic in its course.

The choice of a bullet must depend, first, on the type of game that is to be encountered, and secondly on the type of country in which the hunt is to be conducted. After the selection of the properly designed bullets, the next important point to be considered is the rifle, and the choice is a matter of personal selection. All thick-skinned animals require bullets which possess a great degree of penetration; therefore, it is essential that the bullet jacket be heavy, with thicker metal walls than usual. It also becomes almost necessary to eliminate open points entirely and rely more upon the bullet designed for such purposes, with proven results. A well designed sporting type of bullet, particularly one with a small amount of lead exposed at the tip, should be selected and used. It is hardly necessary to say that for elephants a full metal patch is absolutely essential. For heavy, dangerous, thin-skinned game, such as lions and tigers, a full metal-patched bullet is of little effect, altho such animals can quite easily be killed with such a bullet if hit in a vital spot. Killing power, as already explained, is not the only necessity; an animal must drop upon impact. This means that the whole force of the bullet's energy must be utilized instantly to its fullest effect; in other words, the bullet must so expand that it will not pass through the animal.

For the small varieties of non-dangerous thin-skinned animals the bullet must break up more quickly; therefore one with a larger opening in its point is preferable. The varieties of "expanding" bullets placed upon the market are chronicled, and

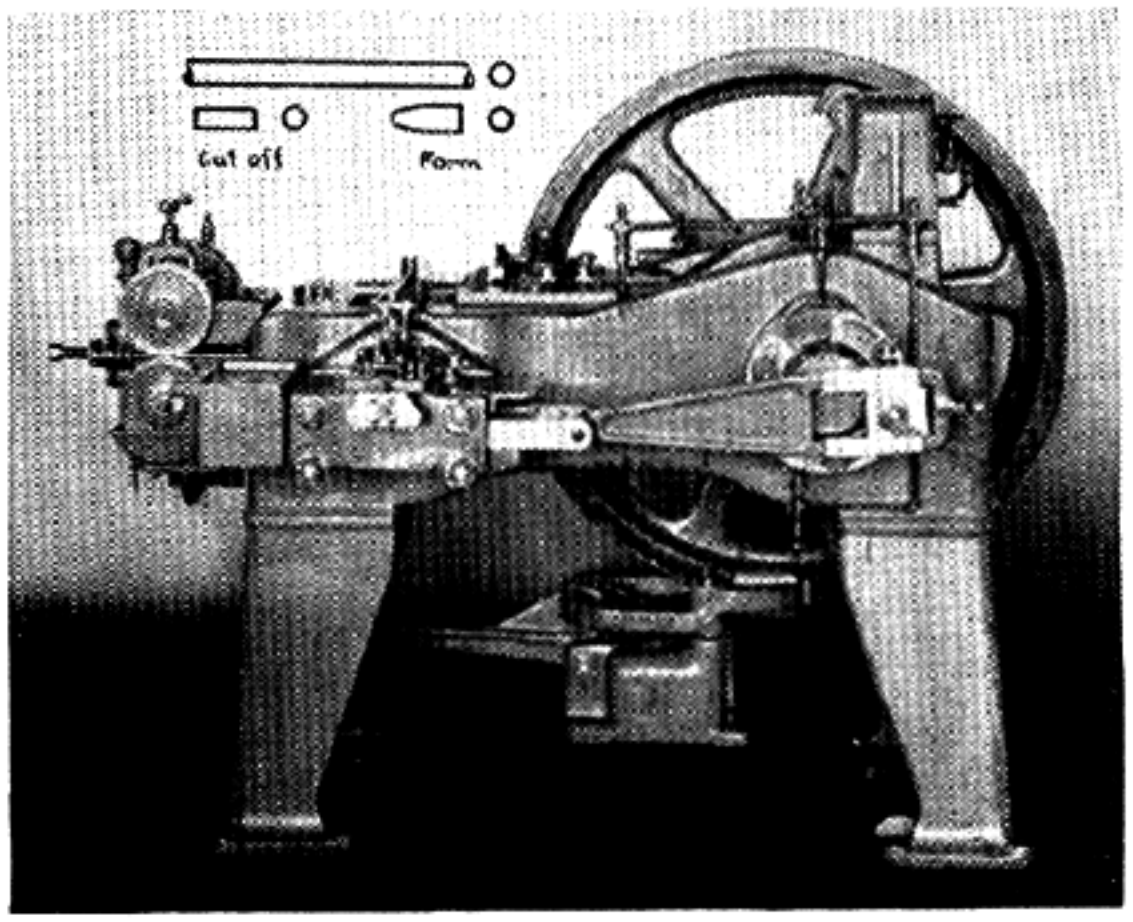

Fig. 170
Slug-forming machine, employed to form the lead cores used in jacketed bullets

no doubt have great merits in their favor, altho you can say none is perfect. From personal observation I have come to the conclusion that the copper-tubed bullet would have great merits and would be extremely effective, altho no doubt some of the more modern designs can also be given special consideration. It is difficult and even dangerous to offer suggestions, but I am inclined to think it much better for the interested person to select various types and experiment upon various substances, such as dead animals, 7/8-inch pine boards (placed 1 inch apart), small cans filled with water, clay, paraffin, soap, etc., to see the results of personal choice.

Having expressed a particular choice in selection of bullets for both dangerous and non-dangerous game, it will be well to carry the reader afield with a weapon for the former class of animals first. For use against really dangerous game a rifle must be extremely powerful, and "power" expressed in armament means weight. The weapon, however, must always be carried in the hand, and the weight is therefore limited to a certain extent by the hunter's strength. Nevertheless, facts must be faced. The choice must fall upon a "double rifle" as the most essential weapon. Dangerous animals must not only be given a deadly wound, but must be paralyzed, so to speak, so that even if the wound is not mortal, time will be allowed for the second shot. Here again weight in both rifle and bullet is more important than ever. Therefore the shocking power is essential, and it can never be furnished by a small-caliber high-velocity rifle with certainty. Indeed, for this reason a double medium-caliber rifle with bullets of the proper design will be the best. A heavy weapon is better, providing it is not beyond the hunter's strength.

National Match Bullets — The manufacture of match bullets used in target practise demands the finest of precision tools. There will always be endless experimental designs, trying to find the one that, in the firing trials, will prove itself best suited for adoption. It has been found that the boat-tailed bullet comes the nearest to producing the finest accuracy; still, there is the never-forgotten demand for thorough inspection of metal, selecting the strips of the desired Brinell hardness as well as the uniform thickness, which is to be tested with special dial indicator gauges to find the variations in the metal, so that when the cups are formed there will not be any eccentric jackets even up to the third draw. Special orders should be given the mills so they can keep their rolls ground and bearings in perfect condition to eliminate all possible variations in thickness of the sheets. The start of a bullet-jacket cup means a perfect projectile upon the finished assembling operation, providing tools and machines are as near perfect as it is possible to make them; but rifles and cartridge case must also be given the proper consideration.

The modern rifleman demands that the long ogival bullet shall perform perfect scores at 300, 500, 600, 800, and 1000 yards. The spiral or rifling in the barrel has solved a part of this problem for him. To understand just how this successful performance was attained, analyze more closely the bullet designs, selecting two bullets, one a flat-base and the other a boat-tail of modern manufacture, but the two with the same ogival point. Both bullets are lightest at their points, have the least resistance there, and receive at that end the greatest support when passing through air. There should be a clear understanding of the important fact that the base end of the bullet naturally falls faster than the ogive. As an illustration we may consider a bullet made up in two parts, the base a cylinder and the ogive a cone, the two having equal bases and equal altitudes; but by extending the base out into a tapered effect, shown in Figure 149, we influence the air pressure, causing a vacuum at the base; this changes the rule whereby the taper at the base is not equal to the cylindrical portion of the flat-based bullet. The flat base retards the bullet, allowing it to make a greater arc when it is falling horizontally, showing the amount of air pressure on the base of the bullet, while the upward pressure on the ogive is half of that on the base; therefore, the forces pulling the base and ogive will be in proportion to their bulk. The volume of a cylinder is equivalent to the product of its base and its altitude, while the volume of a cone is only one-third of the product of its base and altitude. However, the pull on the base of the bullet exerted by the force of gravity is three times as great as that on the ogival point; while the amount of air pressure holding it up is only twice that on the point; therefore the base end of the bullet tends to fall faster than the lighter point. Consequently by designing a bullet with equal ogival points on each end the vacuum and pulling force are equal; hence we find one of the important demands for the supporting force of rapid spin to keep the pointed ogives straight and keep the bullet upon a true course. It is not always practical to give a bullet the same conical points, due to the difficulty experienced in manufacture; but we can give it a certain amount of taper which will reduce the vacuum to a minimum and still come within our desired expectations of accuracy. Figures 149 and 166 will show the different air vacuums created at the base of a bullet starting out with the flat base and ending in a bullet de-

signed to give great distance of flight. The difference in the support which the ends of the bullet receive from the air, therefore, is only one of the factors which throw a modern-design bullet from its true course. A glance at the illustration will show the effects of the air which lies in the bullet's course as it is passing forward.

A bullet once set in motion will move to infinity in its original course unless prevented or deflected. It would continue along a true course were it not for the air it must force aside and for the pull of gravity. The modern jacketed bullet has more buoyancy to travel through space, due to its equal wall construction; but due to air currents it has no fixed point of rest. Analyze briefly the course each bullet takes in its effort to obey the commands of gravity, air resistance, and rotational force, and you will see why the best designs are bound to face considerable failure. When once a true-designed projectile is found, the best that can be expected is to eliminate all errors in its manufacture; also in the rifle barrel and cartridge case. However, bear in mind that the longer the bullet the more its body will be subjected to the air forces as its ogive is directed from side to side, and that the smaller the bullet the greater the surface exposed in proportion to its cross-sectional area. Again, a bullet must be perfect, with a high polish, so as not to create any unnecessary air friction when shot over a long course.

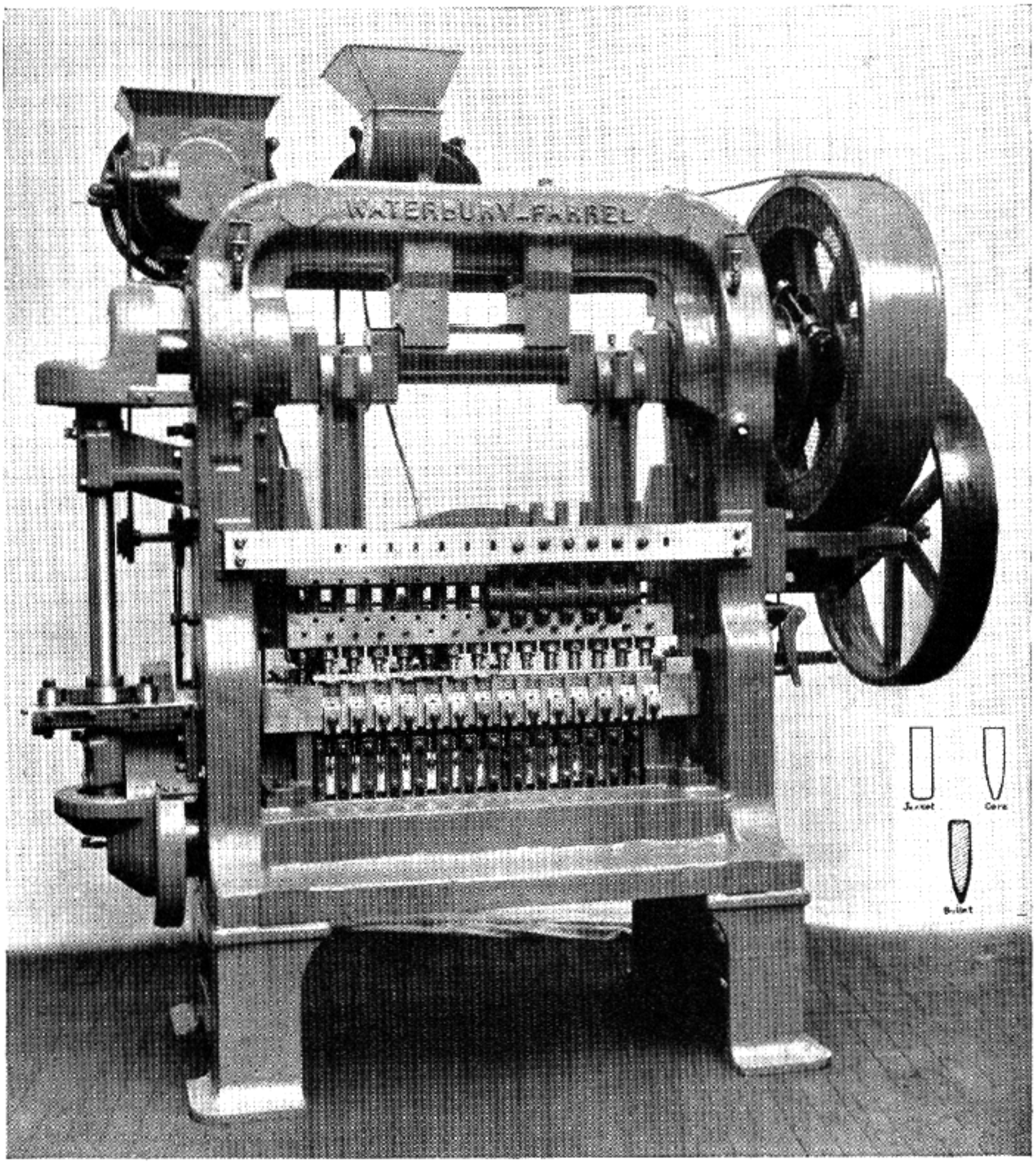

Fig. 171
Bullet-assembling press. This machine points the jacket, inserts the lead core, and forms the bullet, performing nine different operations before the bullet is complete. It is automatic in performance

High Velocity Bullets — Space is well taken to permit our following the advantages of the prevailing trend to high muzzle velocities and also guaranteed high remaining velocities at great distances. Naturally such results are sought by the experimenter as well as the army engineers of various military nations. High muzzle velocity means great striking energy with its finally instantaneous stopping power, whether on man or beast. High remaining velocities at distances insure one sight-setting, providing wind and weather are at rest; therefore the time of flight is reduced, which is also the object sought and a particular benefit in the process of moving troops or animals. This should inspire the experimenter to seek muzzle velocities up to 10,000 feet per second.

The highest velocity reached with our present arms and cartridges is approximately 3600 f.s. muzzle velocity with a Western Tool & Copper Company 120-grain bullet fired from a 300-caliber magnum rifle. The disadvantage of so high a velocity will often offset the advantage—due to high breech pressures, recoil, and decreased life of the barrel.

The caliber .30 Model 1906 cartridge has become standardized to about 2700 f.s. with a bullet weighing between 150 and 180 grains, which is about the highest practicable velocity, considering all factors involved, such as recoil, life of barrel, powder flash, etc. There can be slight changes made in powders, primers, and specially designed bullets, enabling these figures to be increased, for example, as much as 12 per cent; for our present-day demands a greater increase in velocity is not required, but we should never lose sight of the future or cease experimenting to meet its demands. Considerable study has been given this subject and German engineers have worked out methods of increasing the muzzle velocity by means which do not follow the present practise.

The scope and possibilities of the development of a high velocity over our present standards cannot be limited to the present new era in ballistics. To approach high velocities up to 10,000 f.s. with any bullet we must construct sub-caliber chambers and bullets designed small in caliber from the standpoint of interior ballistics; therefore it is desirable to have a bullet with as little mass as possible, but with considerable cross-sectional area and with low sectional density, the latter section so constructed as to give the powder gases sufficient area upon which to force the mass forward. This would mean a base made of a material 0.3 inch in diameter but capable of reducing itself as it passes up the bore, which is made on a taper until it reaches the rifled bore to a diameter of 0.15 inch, there to give the projectile the desired rotation. As soon as the bullet takes flight the base will be useless, but the missile will speed on, capable of exceedingly high velocity because of its small cross-sectional area and large sectional density. The construction of such a bullet may be of steel given a cupro-nickel or silver plating heavy enough to take the rifling. Perhaps some authority will prove by theory that even these designs are impossible and contradictory to all laws of mechanics, but I shall assure him that they are based on the laws of the stars that we gaze upon, and can be done.

Mr. H. Gerlich, a German engineer, has many patents on ultra-high-velocity rifles and bullets, based upon extensive research work. This idea is only in its experimental stages, and by working out the correct details a 100-per-cent success could be obtained for military purposes as well as the possibilities on game. Facts are always stranger than theory, and we must lay theory aside and work up well established facts. I do not hesitate to say that the military nation that adopts the high-velocity bullet will be the ruling power of the world from a military aspect.

Designs of the Future — We cannot, however, take leave of past designs when they have only dipped over the horizon of a few hundred years. We have witnessed a gradual cycle of evolution. Wars have hastened the requirements for both arms and ammunition; still, many years have elapsed between radical changes. Our age has a temporal outlook. Let us with a glance see as far as we can.

It cannot be denied that our small-arms development is in a slow state of evolution. We take it, then, as proved, that the government arsenals must come to the fore, to design the necessary weapons and ammunition for war purposes, while private manufacturers follow the demands of the public. It is a real tragedy that game is disappearing, and that the rabbit and the fox may soon be the only animals man can test his skill on—that the larger animals will be but a memory recorded in our museums and game reservations. That "helpless" creature, man, will stamp out nature's gift, the wild animals, in the various parts of the world. A fresh tide of culture may change the whole course of life with a revived intellectual movement to stop all wars, but that time is very difficult to foresee; certainly it must be preceded by the elimination of the feeble-minded and criminal classes. Man seems to move in a series of cycles, advancing as he may, only to be interrupted by some closed circle of natural sequence, and then entering upon a larger, if less immediately satisfying process.

Probably there will be a development of the

ultra-high-velocity cartridges, as well as the rifles for fine target work; but a number of years will elapse before these can even become a standard among target shots; the government must first develop such arms in our arsenals to a high degree of accuracy, and both the arms and the ammunition must become reasonable in price. Meanwhile, certain eager minds will go on experimenting on them, regardless of cost.

Now, a glance into the far future. First, laws are going to restrict the civilian to such a point that to own firearms of any kind will be a crime punishable by law, due to the gradual tread of the crushing effect of the ruling classes over the masses. Secondly, wars will be unnecessary, by reason of disarmament agreements. Without a doubt these statements are a possibility. Many will say it is a ruinous possibility, for at last we shall have robbed men of their old fighting spirit. It then will be the extortioner who will unbalance it all. The pity of it is that men today are not educated upon the old lines, due to the small demand for high-class weapons for sporting purposes and protection. If we were living in an age that required weapons for self-protection, as in the early years of American colonization or in the ages when pre-historic monsters roamed the world, no one would say, "Let the experimenter solve our problem of existence."

Consideration of the relative effectiveness of arms is at times peculiarly imperative; it must be so now. For the moment we are tired of our present-day lack of interest in firearms and their designs, and out of sympathy with all our present products. Merely wishing something different does not solve the problem. We must go on building from the experimental stages. We may have no clear vision to where we are going, but we cannot stand still, and it is for the man with the small experimental shop to carry out new ideas and designs and keep the fires lit continually. Man will always be thinking as his ships, motors, buildings and engines grow vaster or still increase in speed; and so will our bullets increase in velocity until we satisfy ourselves as to their possibilities.

In closing, it is necessary to emphasize the fact that no matter how perfect our design and manufacturing methods, they will in the end be wasted unless the cartridge case, rifle, barrel, and chamber be made aright, and the powders be correctly selected. Deep down remains the burning desire to increase velocity, accuracy, and striking energy; and in the end it will prevail. Intelligence is the medium of life's force and the will for others to guess.

CHAPTER XXIX

Mechanical Definitions and Phrases

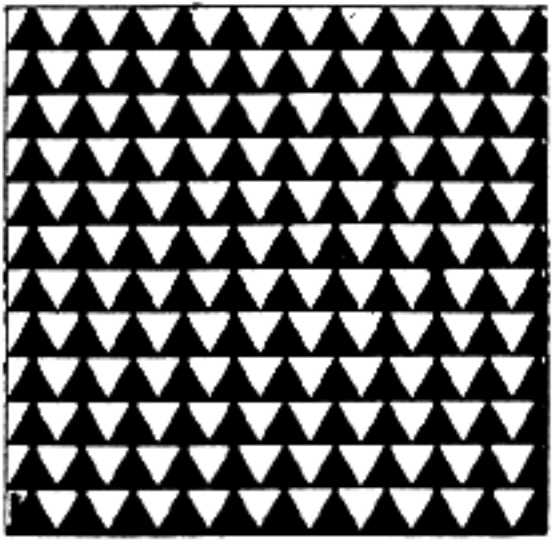

CHAPTER XXIX

Mechanical Definitions and Phrases

THIS glossary has been compiled to assist our readers in definitely understanding the shop terms used by gunmakers in various parts of the country, as well as the names of their tools and appliances. This will eliminate any difficulty when we refer to any part of a rifle or shotgun. Old terms are included as well as modern ones.

To make this glossary complete would require a separate volume, for the field is large; but our space is limited, so we shall confine ourselves to the terms most frequently used. The names are in alphabetical order, with a description in language as simple as possible.

Action—That part to which the barrel is attached. In a rifle it is often called the receiver. Shotgun or double-barrel actions house all the mechanism or working parts. The term may be further modified as side-action, breech-action, bolt-action, snap-action, etc. It is also used to indicate the different forms of gun locks, as back-actions, front-actions, etc.

Adapter—An auxiliary chamber to fire smaller cartridges in a barrel of like caliber, but having a larger chamber. Adapters are made to conform to the outer walls of the chamber and reamed to fit the auxiliary cartridge.

Ammunition—All the various articles used in the discharge of firearms, such as cartridges, shells, powder, shot, bullets, primers.

Angle Plate—A cast-iron plate with two surfaces at right angles to each other.

Anneal—To render soft, as in the case of steel and other metals, by heating to a low red heat and allowing the article to cool gradually.

Aperture—An open passage. A rear sight with either a small or large opening; a peep sight.

Auxiliary Barrel—A rifled barrel that slips into a shotgun barrel, thus converting a shotgun temporarily into a rifle.

Auxiliary Chamber—See Adapter.

Back-action Lock—A gun-lock in which the main spring and sear are in the rear of the hammer or striker, all of the mechanism thus being in the wood of the stock.

Ball Reamer—Usually a fluted or rose reamer used for making bullet moulds. It is considered advisable to space the flutings in it irregularly, as this tends to prevent chattering.

Bar-action Lock—A lock that is bedded partly in the frame or action as well as in the stock. In a bar-action lock the main spring is ahead of the hammer or striker.

Barrel—The steel tube of a rifle or shotgun through which the projectile is given motion and is directed in its line of flight.

Barrel Band—A metallic loop fastened around the barrel to hold the barrel to the stock.

Bastard—Not regular. The term is usually applied to a file, designating a size of tooth between the coarse and second cut; or to a screw thread, meaning one that is not of standard proportions.

Bend—The drop below the line of sight at the comb and heel of a shotgun or rifle butt-stock. This term is largely used by the British rifle and shotgun makers.

Bent—The notch in the tumbler of a shotgun lock.

Bevel—A tool for measuring or laying out angles. Also a surface not at right angles to the main surface. It may be of any angle. When two angles meet at 45 degrees it is called a "miter."

Binocular Vision—Sighting with both eyes open. The proper method of aiming a rifle, shotgun or pistol.

Bolt—A sliding bar used as a breech block in bolt-action rifles. The working part of the action that locks the cartridge in the chamber.

Bore—The interior of a barrel through which the charge passes. The rifle diameter over the lands. Bores or gauges of shotguns are based on the old-time method of fitting spherical bullets of fixed weight. For instance, an ounce bullet ran 16 to the pound, consequently the bore fitting an ounce spherical bullet was called 16 bore, and so on. Bores are made true-cylinder and also choked to give greater density of pattern at longer ranges. The bores of rifles have been made elliptical, hexagonal, polygonal, etc.

Brazing—The joining of metals by the use of copper filings or spelter. Borax or some other substance must be used as a flux.

Breech Pin—The plug with tang attached which is used on all muzzle-loading firearms.

Bridle—The inside plate in a shotgun lock, which supports the tumbler and other pins at their inside ends.

Broach—A tool which is practically a series of chisels or cutting teeth for enlarging holes or changing their shape. Generally used for odd-shaped holes. The round broach is used to enlarge and straighten the bore of a muzzle-loading rifle.

Browning—An oxidization produced and retained on the surface of gun barrels by means of acids. This is to prevent further oxidization or rust.

Bullet—A small projectile for a firearm made in various forms and weights. The base metal is always lead, alloyed with tin, antimony, etc., to give it resistance to the rifling. In modern high-velocity weapons the bullets are cased in an envelope of a harder metal. Bullets are made with full metal patch, hard nose, soft point or dum-dum, hollow point, and with bronze and steel points. Bullets used in warfare are full metal patch, when used against human beings; special forms are made for armor piercing, tracing, incendiary and other objects.

Bump—The corner or heel of the butt stock at the top of the butt plate.

Burnisher—A piece of highly polished and hardened steel, used in polishing the surface of metals.

Burnishing Reamer—A reamer used for finishing the bore and chamber of rifle barrels. The cutting edge comes to a sharp flat point in the center of the flute.

Butt—That part of a gunstock that fits against the shoulder.

Butt Plate—A plate of metal, horn, or vulcanite placed on the butt to protect the wood against damage.

Button—A steel bushing hardened and ground, made in sets and used to locate holes in jig plates and other work where it is necessary to have the bored holes correct distances apart.

Caliber—The diametrical measurement of the bore of a rifle barrel.

Caliper—An instrument used for measuring diameters. It is in different forms, such as outside, inside, keyhole, and slide calipers.

Cam—A rotating piece, eccentrically pivoted; placed in different parts of rifle and shotgun actions to give short locking motions. *Cam Effect*—Locking or moving with a cam.

Cannelure—A depression or narrow groove, either knurled or plain, rolled into the bullet or cartridge case. A cannelure in a bullet is often used for the purpose of crimping in the end of the cartridge case, thus holding the bullet at its proper depth. Other cannelures are designed to hold the lubricant.

Cap—The metal or other covering placed on a pistol grip and fore-end. Also the small cup-like primer placed on a nipple on muzzle-loading firearms to ignite the charge.

Carbonizing—The heat treatment of mild steel to make the outer surface hard. The surface absorbs carbon from the material used and forms a skin of glass-like hardness.

Carbine—A form of rifle made short enough to be easily carried on horseback.

Cartridge—The fixed ammunition for a firearm.

Case-hardening—A hardened steel-like exterior given to iron and cold-drawn steel by heating it in connection with cyanid or animal charcoal, and then plunging while hot into cold water.

Cast-off—The distance the stock is offset at the heel, to the right, from a straight line with the axis of the bore. It is called cast-on when to the left. For the right handed person it is to the right on all rifles and shotguns.

Center Fire—A form of cartridge case in which the primer is placed directly in the center of the base.

Center Punch—Punch for marking points on metal. It is often called a prick punch.

Chamber—The enlarged space or recess in the breech of a rifle or shotgun barrel wherein the cartridge is placed.

Charger—A measure employed for measuring powder in loading ammunition.

Chasers—Special tools used for cutting threads by chasing. Chasers are made circular and flat, and in the old days the flat ones were operated by hand.

Checker—Diamond shaped patterns incised in metal and wood for ornament, for matting the surface, and when used on the stock, to afford a more secure grip.

Cheek Piece—A projection on a part of the butt stock to afford a rest for the cheek at the time of firing.

Cherry—A small circular cutting tool used for forming the interior of bullet moulds. The term "cherry" was no doubt borrowed from the fruit of the same name.

Choke Bore—A shotgun bore slightly constricted at the muzzle.

Cleaning Rod—A rod used to clean a rifle or shotgun bore.

Clamp, C—A clamp shaped like the letter "C"—used for holding work in various ways.

Cock—In flint-lock guns, that part of the lock in which the flint was held. The name is also often applied to the hammer of percussion and other locks of more modern make. When the hammer is pulled back to its last catch, we say the gun is full-cocked.

Cocking Piece—The projecting end of the striker extending back and free of the bolt in bolt-action rifles.

Comb—That part of the stock directly back of the "hand" upon which the cheek rests at the time of firing.

Cordite—A powder of a nitroglycerin base which comes in cords or strings like spaghetti. A high-velocity smokeless powder. The British use the word generally to denote smokeless powder.

Cross Bolt—A bolt frequently used on shotgun actions to lock the barrels to the standing breech.

Cross Hair—Minute cross wires designating the optical center of a telescope sight.

Crimping—Fluting, corrugating, or compressing the material, as at the end of paper shotgun shells and the ends of metallic cartridge cases, to crimp or hold the projectile in place.

Cut-off—A mechanical arrangement temporarily to cut off cartridges so they will not feed from the magazine into the chamber.

Cylinder—That part of the revolver in which the cartridges are held.

Damascus—A highly ornamental combination of metals, used in making shotguns during the last century. The guns were produced by twisting together dissimilar metal strips, such as steel and iron, and welding them. Damascus has been superseded by steel in these days, since suitable steel is homogeneous and weldless.

D. C. M.—Abbreviation for Director of Civilian Marksmanship. An officer of the War Department.

Dies—Tools used to cut, stamp, or form metal by pressure. Dies play a great part in all modern manufacturing, supplanting forging to a very great extent.

Dog—An old name for sear. Also a cocking lever. A trigger for each barrel of a double-barreled weapon.

Drop—Distance measured from the line of sight to the top of heel and comb of a gun stock.

Dutchman—A term used for a wedge or liner to make a close fit. With beginners a "dutchman" is often necessary to cover up mistakes and poor fits.

Ejector—An automatic device by which the fired shell is expelled from the chamber. *Automatic Ejector*—An automatic auxiliary lock which ejects the fired shell upon opening the breech of a shotgun.

Elevated Rib—The raised sighting plane placed on top of the barrels of a shotgun or rifle.

Escutcheon—A reinforcement of harder material through which a fastening passes.

Express Rifle—A term coined by Purdey, the eminent British gunmaker, to denote a rifle of greater velocity than customary. It was a black-powder term. The term *nitro express,* as now used, distinguishes a rifle of extreme power and velocity.

Extractor—An automatic spring-shaped hook, which draws the empty fired cases from the chamber.

Flash—In the old days of the flint-lock a gun was said to "flash" when the priming was ignited in the pan but failed to fire the charge. The flash hole in a cartridge case is the small hole between the primer pocket and the interior of a cartridge case. See Vent.

Flute—The name for the groove in reamers, taps, drills, etc. Its function is to relieve the cutting edge and carry the shavings.

Flux—A substance or mixture used to facilitate the amalgamation of metals or minerals when melting them. Glass, borax, etc., are fluxes.

Forearm—That portion of the stock lying under the

barrel, in front of the action. Also called the *fore-end.*

Forge—An open fireplace furnished with air blast for heating metals in welding, hardening, etc.

Fowling Piece—A term used in the old days for a light smooth-bore gun with which to hunt small game or "fowl."

Frizzen—In old flint-lock guns, the steel plate that receives the blow of the cock and covers the pan. It is also called the "hen."

Front Sight—The sight located nearest the muzzle of the barrel. The old name for this was "foresight."

Gauge or **Gage**—The term used for shotgun bore sizes. The standard gauges are 10, 12, 16, 20, 28, and 410.

German Silver—A useful alloy. It is copper 60 parts, zinc 20 parts, nickel 20 parts. The old gunsmiths used this metal largely for ornamentation.

Grip—A name usually applied to the "hand" of the butt-stock. It also applies to the grip of a revolver and pistol.

Guard—The loop of metal which curves around the trigger to protect it.

Hack-saw—A highly tempered saw for cutting metal, held in a hand frame or operated by power.

Hammer—That part of the gun lock which strikes the plunger.

Hammer Gun—A gun whose hammers are on the outside of the action.

Hammerless Gun—A gun whose hammers are concealed within.

Hand—The operating lever which turns the cylinder when the hammer is pulled back on a revolver. The "grip" of the butt stock.

Hang Fire—A delayed ignition. An uncommon circumstance in modern ammunition, but when it occurs a very dangerous one. When ignition is not instantaneous the breech should not be opened for several seconds.

Heel Plate—See butt plate.

Hinge Pin—The pin in the action of a shotgun upon which the barrel plays.

Ignition—Any chemical combination which can be caused to explode and fire the powder charge.

Kentucky Rifle—A pioneer American rifle. It was muzzle-loading and had a very small bore. The great length of the barrel was one of its main features. It marked one of the most important steps in the development of the rifle.

Kick—The recoil of a firearm at the moment of firing.

Knurling—The checkering or roughening of a metal surface to afford a better grip. It is used on windage and elevating screws, etc.

Lands—The spaces in the bore of a rifle barrel between the grooves. The spaces between the flutes or grooves in reamers, taps, etc.

Lap—A plug usually made of lead, iron, or copper, which, charged with abrasives, is used for fine grinding.

Lathe—The engine lathe is the ordinary form of this useful turning machine, with leed screw, power feed, slide-rest, etc.

Leaf Sight—A rear barrel sight with one or more folding leaves for various ranges.

Lever—The moving handle, the working of which locks or unlocks the action in guns or double rifles. There are several forms, such as top-lever, side-lever, under-lever, etc.

Lock Plate—The flat plate on the sides of shotgun or double-rifle actions upon which all the parts of the gun lock are built.

Lower Rib—The rib underneath and between the barrels of a shotgun or double rifle.

Lump—The projecting fin in the center breech end of the barrels of a shotgun or double rifle which descends into the flat of the bolt and forms the abutment into which the sliding bolt engages.

Main Spring—The large spring in the gun lock which imparts action and power to the hammer.

Magazine—The receptacle for the cartridges in a repeating weapon, from which they are fed automatically into the chamber by the action of the mechanism. A term also used in small-caliber bolt-action rifles.

Magazine Rifle—A rifle provided with a magazine for containing cartridges, and so made that, by means of springs or levers, the cartridges pass into the chamber ready for firing.

Magnum—Meaning very large or very great. A term used by the British rifle makers to denote a weapon of much more than normal power.

Master Die—A die made standard and used only for reference purposes or for making tools. The term "master" is used also for reference gauges, tools, etc.

Measurements—The standard measurements in firearms are the decimal parts of the inch and meter.

Milling Machine—A machine operating a stationary revolving cutter. The work is brought in contact with the cutter by a traversing table.

Miter—A bevel of 45 degrees.

Monocular Vision—Viewing with only one eye. When one eye is closed in taking sight with a gun, it is a case of monocular vision.

Monte Carlo—A form of butt stock in which the comb is carried back horizontally almost to the butt, when it descends abruptly to the heel portion. It is used to some extent in live-pigeon shooting.

Mould, Bullet—An implement for moulding bullets.

Mounts—A steel cradle which carries the telescope on a rifle. It is so designed that adjustments of the 'scope are freely made and the 'scope easily mounted and dismounted.

Musket—The military form of a rifle. The word is frequently used to designate the old smooth-bore military guns of a past period.

Muzzle—The exit end of a rifle or shotgun barrel.

Nipple—The short tube upon which the cap is placed in a percussion firearm.

Nipple Wrench—An implement used for screwing a nipple into position or out. It was often called a tube wrench.

Nose—In shop work this term is applied to the business end of a circular pointed lathe tool, or the threaded end of a lathe or milling-machine spindle.

N. R. A.—Abbreviation of National Rifle Association. A government organization for the promotion of rifle practise.

Offset—See Cast-off.

Over and Under—A gun or rifle in which the barrels are placed vertically, one over the other. This perhaps is the most logical and up-to-date system of firearm construction.

Paradox—A shotgun with a portion of the barrel at the muzzle rifled. It will, by this means, fire heavy lead bullets, and at the same time handle a shot charge equal to a modified bored shotgun. Very popular in India and Africa.

Pan—The small pan or receptacle on the flint-lock action which holds the priming charge and in which the latter is ignited by a spark from the flint striking the frizzen.

Pepper-box Pistol—A form of revolving pistol in which

the barrels are made full length from one piece of metal. The rotation of the barrels and the action of the lock was produced by the pulling of the trigger. It antedated the revolver, but is now obsolete.

Percussion—A compound of various elements used as a detonating or explosive agency, such as the percussion cap used on rifles from 1830 onward and the primer now an essential part of rim- and center-fire cartridges. The percussion primer is also used in fuses.

Picker—A small wire implement of the days of the old flintlock and used when occasion required to relieve or clean the touch-hole of the barrel.

Pipes—Short tubular receptacles attached to the under side of a barrel to hold the ramrod in place.

Pistol—A small variety of firearm so made as to be easily carried in the pocket and fired with one hand. A hand-gun.

Pistol Grip—A gun stock the grip of which turns down, as does the handle of a pistol.

Pitch—The distance from the center of one screw thread, or gear tooth, or serration of any kind, to the center of the next. In screws with single threads the pitch is the same as the leed, but not otherwise. The angle which the butt of a firearm takes in relation to the line of sight.

Planishing—The finishing of sheet metal by hammering with a smooth-faced hammer.

Plungers—The firing pins which are struck by the hammers in shotguns and double rifles. Called strikers in bolt-action rifles.

Powder Bed—The chamber in a muzzle-loading rifle.

Priming—The powder in the pan of a flint-lock gun.

Proof Marks—Impressions of stamps made on shotgun and rifle barrels to indicate that they have been proved.

Proving—Testing gun barrels with a 30 to 40 per cent overcharge to ascertain if the barrels and actions are of the requisite strength.

Ramp—A slope or incline. The sloping part of a front-sight base on a rifle.

Ramrod—The rod with which the charge is pushed home in loading the old muzzle loader. The term is still often used for a cleaning rod.

Reamer—A tool to enlarge a hole already existing. Reamers are of many kinds and shapes.

Rebounding Lock—A lock in which the top of the main spring and the crank of the tumbler are so lengthened that when the trigger is pulled the hammer delivers its blow and immediately rebounds to its safety position. It automatically takes the place of the old half-cock.

Recess—A groove beyond the normal surface of the work, such as a recess bored inside of a cylinder. This is often called the counterbored part. An illustration is the recess made to receive the head of a shell.

Relief—The removing of, or the amount removed from, a tool to reduce friction, as back of the cutting edge of a reamer, drill tap, etc.

Revolver—A repeating firearm with a revolving cylinder, carrying the cartridges.

Rib—The strip of metal lying between and connecting the barrels of shotguns and double rifles. (See lower and upper rib.)

Riffle—The name given a small curved file used by die sinkers and others who do similar work.

Rifle—A gun with grooves cut in a twisted or spiral manner upon the interior of the barrel for the purpose of giving the projectile a rotary motion on its axis during flight. This keeps the center of gravity constant and gives infinitely greater accuracy to the course of the bullet.

Rifling Guide—An attachment used by the old-time gunsmiths to guide the course of the rifling saw in cutting the spiral grooves in the bore of a rifle barrel.

Rifle Saws—Short files made to cut the grooves of a rifle by the old-time method of rifling a barrel. They were attached to a rod near its end, and drawn back and forth through the barrel for the purpose of filing the worn groove down to a greater depth. In cases where new grooves were to be cut in a new barrel, the rod passed through a rifle guide, which forced the saws to take the proper spiral through the barrel.

Rim Fire—A cartridge in which the priming mixture is placed in the fold of the head of the shell; in distinction from center fire, in which the priming mixture is contained in a primer imbedded in the center of the cartridge head. The popular .22-caliber ammunition is the best illustration of the rim-fire method.

Rook—A European bird of the crow family. A small-bore rifle used by the British to shoot crows and other vermin.

Rouge—A fine abrasive paste or powder used for putting a high polish upon the surface of well-finished metals. It is usually applied by rubbing with a soft leather pad, but can be applied by buffing wheel or otherwise.

Run—The term applied to a drill or reamer when the tool shows a tendency to diverge from the straight or direct path intended.

Saw—See Hack-saw.

Scatter—A term applied to a shotgun which throws the shot over an unusually wide range of space. It is said to "scatter."

Scroll Guard—An extension downward from the trigger guard or an extra-long guard used to improve the grip on match rifles. Also the fancy brass trigger guards on muzzle-loading rifles.

Sear—That part which engages in the bend of the cocking piece. Sometimes a part of the trigger. The firing mechanism of a rifle. On a shotgun the sear is separate from the trigger.

Sear Spring—The small spring used to hold the sear to its position.

Set Trigger—A device for lightening the trigger pull at will, in order to remove the disturbing effect of a heavy pull in target shooting. It is usually effected by means of a series of levers which distribute the force required. The commonest and simplest example takes the form of a pair of triggers, the rear one being used to bring the sear to almost the firing position. A touch on the front trigger completes the movement and the arm is discharged. Set triggers are chiefly associated with the Schützen Verein.

Shaper—A machine where the work is held in a vise on a table or knee and the tool moves horizontally across it. A small metal planer.

Shim—A liner or thin piece of material used for placing between surfaces to secure proper adjustment.

Side Screw (Side Pin)—The long screw extending through the stock of a side-lock gun to secure the locks to the frame and stock.

Sling—A leather or heavy canvas strap used either to carry a rifle or to assist in steady holding of a rifle in deliberate shooting.

Schnabel—The tip of the forearm when it is made in pointed or ornamental form—named from the German word for a bird's beak.

Spinning—The forming of sheet metal by stretching and compressing as it revolves in a lathe.

Spring Compression—A helical spring which shortens in action.

Spring, Helical—A spring coiled lengthwise of its axis like a screw thread. Often incorrectly called a spiral spring.

Spring, Spiral—A spring wound with one coil over the other as in a clock spring. Usually of flat section, but not necessarily.

Square—An angle of 90 degrees or the fourth part of a circle.

Square, Combination—A handy combination tool consisting of square, bevel, and protractor in one.

Steady Pin—The small pin or projection of a main spring which fits in the lock plate.

Strap—The posterior elongation of the frame of a shotgun or double-rifle action which runs down into the stock and provides its principal attachment.

Strikers—See Plungers.

Sweating—A form of soldering.

Swivel—The small piece in a shotgun lock connecting the tumbler and main spring. In revolvers it is used to connect the spring and the hammer. The oblong loop used to connect the sling strap to the barrel and stock of a rifle is called *swivel bow*.

Tenon—A projecting dowel engaging in a corresponding hole. It is used to intimately locate and reinforce tenonable attachments.

Thimble—The metallic loop on the under side of the old muzzle-loading shotguns and rifles to hold the ramrod.

Toe—The extremity of the stock which rests nearest the armpit.

Top Lever—The lever of a shotgun or double rifle placed on the upper surface of the action, which works the opening and locking mechanism of the gun.

Trammels—Heads of beam compases for drawing large circles. These fit on a beam of either steel or wood and can be adjusted to any diameter.

Trigger—Called "tricker" by old gunsmiths because it did the trick. The small finger lever under the gun, which when pressed with the finger releases the confined main spring and allows the hammer to descend.

Trigger (Single)—A trigger so devised that it will discharge both barrels of a double gun.

Trigger Plate—The steel plate upon which the triggers are pivoted.

Tube—The term used for a rifle or shotgun barrel in the rough. Often referred to colloquially as "the rifled tube." An old name for nipple.

Tumbler—The hammer, so called, of a hammerless gun.

Upper Rib—The rib above and between the barrels of a double-barreled shotgun or rifle.

Vent—A small hole between the primer pocket and powder chamber in a cartridge case. Also the small hole in the side of old flint-lock guns, communicating with the interior of the powder chamber.

Vise—An implement for clamping or holding work during operations.

Windage—A term used for sight correction laterally either right or left. As its name implies, it is to make adjustments for wind pressure.

Wiper—A shop ramrod used in wiping out and cleaning the bore of firearms. Also a small spiral implement made to attach on the end of a ramrod for the purpose of boring into and drawing a wad from a gun.

DIRECTORY

Gunsmithing Supplies, Gun Makers, and Gunsmiths

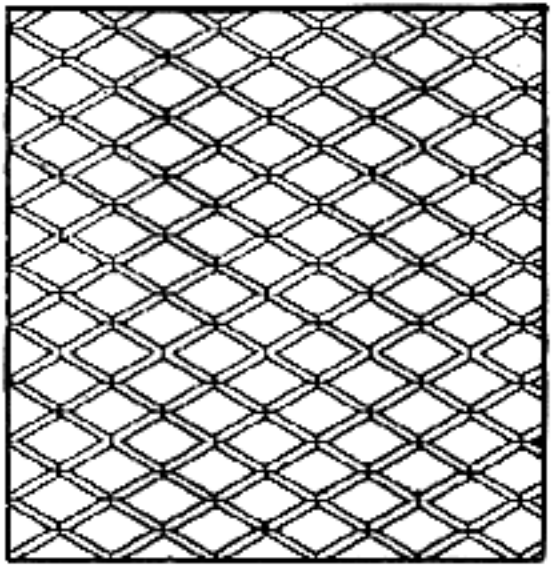

Gunsmithing Supplies, Gun Makers, and Gunsmiths

* * *

Ammunition Manufacturers:

Peters Cartridge Division,
Bridgeport 2, Conn.

Remington Arms Co., Inc.,
Bridgeport 2, Conn.

U.S. Cartridge Co.,
111 Broadway,
New York 6, N. Y.

Western Cartridge Co.,
(Division of Olin Industries, Inc.)
East Alton, Ill.

Winchester Repeating Arms Co.,
(Division of Olin Industries, Inc.)
New Haven 4, Conn.

Imperial Chemical Industries, Ltd.,
Witton, Birmingham, England.

Berlin-Karlsruher Industrie-Werke AG,
Karlsruher, Baden, Germany.

Antique Firearms:

Francis Bannerman Sons,
501 Broadway,
New York 12, N. Y.

Kimball Arms Co.,
Woburn, Mass.

Arms and Ammunition Dealers:

Abercrombie & Fitch Co.,
342 Madison Ave.,
New York 17, N. Y.

Charles A. Bogert,
144 Jackson St.,
Sandusky, Ohio.

Hudson Sporting Goods Co.,
52 Warren St.,
New York 7, N. Y.

S. E. Laszlo,
(Eley Shotgun shells)
25 Lafayette St.,
Brooklyn 1, N. Y.

Philip Jay Medicus,
18 Fletcher Place,
New York 57, N. Y.

Stoeger Arms Corp.,
45-47 Pearson St.,
Long Island City 1, N. Y.

Von Lengerke & Antoine,
9 North Wabash Ave.,
Chicago 2, Ill.

Westley Richards & Co., Ltd.,
23 Conduit St.,
London, W. 1, England.

Barrel Drills and Barrel Tools:

Forster Brothers,
86 E. Lanark Ave.,
Lanark, Ill.

Fuller Tool Co.,
4000 West Eleven Mile Road,
Berkley, Mich.

H & M Tool Co.,
24062 Orchard Lake Road,
Farmington, Mich.

High Standard Manufacturing Co.,
(Barrel Drills & Tubes)
Dixwell Ave.,
Hamden, Conn.

Pratt & Whitney Co.,
(Rifling Heads, etc.)
Hartford, Conn.

Redford Reamer Co.,
Box 141, Redford Station,
Detroit 19, Mich.

L. E. Wilson,
Box 636,
Cashmere, Wash.

Binoculars:

Bausch & Lomb Optical Co.,
630 Lomb Park,
Rochester 2, N. Y.

D. P. Bushnell & Co.,
43 E. Green,
Pasadena 1, Calif.

Far Eastern Sales Co.,
2251 W. Pico,
Los Angeles 6, Calif.

National Camera Exchange,
86 South 6th St.,
Minneapolis 2, Minn.

United Binocular Co.,
9043 S. Western Ave.,
Chicago 20, Ill.

Carl Zeiss, Inc.,
485 Fifth Ave.,
New York 17, N. Y.

Bluing Barrels and Gun Parts:

Paul Jaeger,
Jenkintown, Pa.

Ken's Polishing Shop,
7 South First St.,
Minneapolis 1, Minn.

Midland Munitions Co.,
P.O. Box 481,
Bloomington, Ill.

Protective Coatings, Inc.,
Box 3985,
Detroit 27, Mich.

Remington Arms Co.,
Ilion, N. Y.

J. A. Wingert,
124 W. 2nd St.,
Waynesboro, Pa.

Checkering and Inletting Tools:

W. E. Brownell,
925 Donmeyer Ave.,
South Bend 14, Ind.

Franz Metal Specialties,
625 N. 22nd St.,
Allentown, Pa.

Hagen Engineering,
5211 S. Monitor,
Chicago 38, Ill.

Schmidt Precision Products,
Rt. 1, Box 150M,
Saugus, Calif.

Stoeger Arms Corp.,
45-47 Pearson St.,
Long Island City 1, N. Y.

Warner Products,
Baldwinsville 1, N. Y.

Chemicals:

J. T. Baker Chemical Co.,
Phillipsburg, N. J.

McKesson Hall-Van Gorder Co.,
1382 West 9th St.,
Cleveland 13, Ohio.

Cleaning Oils and Solvents:

Brownell Industries,
Montezuma, Iowa.

J. A. Gaines Co.,
1910-A Harris Ave.,
Anniston, Ala.

Frank A. Hoppe, Inc.,
2321 N. 8th St.,
Philadelphia 33, Pa.

Mitchell Chemical Co.,
Stratford, Conn.

Outers Laboratories, Inc.,
Onalaska, Wis.

Winchester Repeating Arms Co.,
New Haven 4, Conn.

A. G. Parker & Co., Ltd.,
Birmingham, England.

Westley Richards & Co., Ltd.,
Birmingham, England.

Gun Barrels:

Ashton & Co.,
1511 N. Gardner St.,
Los Angeles 46, Calif.

J. R. Buhmiller,
P.O. Box 381,
Kalispell, Mont.

Custom Gunsmith Service,
7670 San Fernando Road,
Sun Valley, Calif.

Easton Engineering Co.,
1554 South 2nd West,
Salt Lake City 10, Utah.

G. R. Gouglas,
Rt. 3, Box 297A,
Charleston, W. Va.

Johnson Automatics Arms Co.,
P.O. Box 1512,
Providence 1, R. I.

Pfeifer Rifle Co., Inc.,
11252 Pen Rose St.,
Sun Valley, Calif.

Ralph F. Pride,
P.O. Box 5154,
Portland 16, Ore.

Weatherby's, Inc.,
2781 Firestone Blvd.,
South Gate, Calif.

Gun Barrel Steels:

Crucible Steel Co. of America,
405 Lexington Ave.,
New York 17, N. Y.

Midvale Steel Co.,
Philadelphia, Pa.

Timken Roller Bearing Co.,
Canton, Ohio.

Firth Sterling Steel Co.,
Sheffield, England.

Gun Barrels Chrome-plated:

Marker Machine Co.,
P.O. Box 426,
Charleston, Ill.

Gun Barrels Relined:

Thomas Diller,
P.O. Box 531,
Dayton 1, Ohio.

Gun Barrel Machinery:

Pratt & Whitney Co.,
Hartford, Conn.

Gun Engraving:

Calwell,
3014 Parkway Terrace,
Washington 20, D. C.

A. Griebel,
4724 N. Keystone Ave.,
Chicago 30, Ill.

Gathol E. Windsor,
1113 McGee St.,
Kansas City 6, Mo.

Gunmaker's Supplies:

Maynard Buehler,
Orinda, Calif.

C. Dana Cahoon,
Topsfield Road,
Boxford, Mass.

William Dixon, Inc.,
32 E. Kinney St.,
Newark 2, N. J.

Frank S. Fitchett,
232 Fowler Ave.,
San Francisco 16, Calif.

E. C. Grace,
Horton, Mich.

Heat Bath Corp.,
Springfield 1, Mass.

Paul Jaeger,
Jenkintown, Pa.

Phil Judd,
83 E. Park St.,
Butte, Mont.

Frank Mittermeir,
3577 E. Tremont Ave.,
New York 6, N. Y.

Numrich Arms Co.,
Mamaroneck, N. Y.

C. R. Pederson & Son,
Ludington, Mich.

The Redding Co.,
Cortland 2, N. Y.

Schmidt Precision Products,
Rt. 1, Box 150M,
Saugus, Calif.

Schrader Instrument Co.,
Independence 3, Iowa.

Stoeger Arms Corp.,
45-47 Pearson St.,
Long Island City 1, N. Y.

Mitchel Bosley,
75 Bath St.,
Birmingham, England.

Gun Repair Parts, Etc.:

Francis Bannerman Sons,
501 Broadway,
New York 12, N. Y.

Christy Gun Works,
Sacramento 16, Calif.

Hudson Sporting Goods Co.,
52 Warren St.,
New York 7, N. Y.

Molnar Engineering Co.,
Bairdord, Pa.

Charles W. Moore,
Delhi, N. Y.

The Poly-Choke Co.,
571 Tunxis St.,
Hartford 1, Conn.

Stoeger Arms Co.,
45-47 Pearson St.,
Long Island City 1, N. Y.

Lightwood & Son,
Price St.,
Birmingham, England.

Standard Sporting Guns, Ltd.,
20-21 Bath St.,
Birmingham, England.

Gun Slings:

The Herman H. Heiser Co.,
Denver 4, Colo.

Sporty Sling Co.,
990 East Slauson,
Los Angeles 11, Calif.

Gunsmiths:

J. A. Bibey,
122 S. Lincoln,
Roseville, Calif.

Cougar Arms Co.,
141 Michigan St., N. E.,
Grand Rapids 3, Mich.

Custom Gunsmith Service,
7670 San Fernando Road,
Sun Valley, Calif.

Fryer's Gun Shop,
209 Whittier St.,
Vandergrift, Pa.

Roy Gradle,
205 West Islay,
Santa Barbara, Calif.

Griffin & Howe, Inc.,
202 East 44th St.,
New York 17, N. Y.

Kenneth L. Hooper,
Box 911,
Eureka, Mont.

Paul Jaeger,
Jenkintown, Pa.

Kimball Arms Co.,
Woburn, Mass.

R. W. Lathrop,
110½ Broadway,
North Seattle 2, Wash.

Laurence Naumann,
Douglas, Wyo.

Nelsen's,
1932 E. 4th.
Olympia, Wash.

Thurman Randle & Co.,
208 N. Akard St.,
Dallas 1, Tex.

Gart Sloan,
1022 West Slauson Ave.,
Los Angeles 44, Calif.

L. R. Wallack,
Mayfield, N. Y.

J. A. Wingert,
124 W. 2nd St.,
Waynesboro, Pa.

Wurzer & Peterson,
5239 North Fifth St.,
Philadelphia 20, Pa.

Gunstock Blanks:

Banks-Maxwell,
Box 3301A,
Fort Worth 5, Tex.

Flaig's,
Millvale, Pa.

Roberts Myrtle Wood Shop,
14702 N. E. Sandy Blvd.,
Portland 20, Ore.

D. W. Thomas,
Box 184,
Vineland, N. J.

Mitchel Bosley,
75 Bath St.,
Birmingham, England.

Hand and Machine Tools:

General Aire Co.,
447 W. Norris St.,
Philadelphia 22, Pa.

Hammacher, Schlemmer & Co.,
145 E. 57th St.,
New York 22, N. Y.

Schupack Supply Co.,
7331 Cottage Grove Ave.,
Chicago 19, Ill.

Stanley Tools,
101 Elm St.,
New Britain, Conn.

Stoeger Arms Corp.,
45-47 Pearson St.,
Long Island City 1, N. Y.

Hand-loaded Ammunition:

Brooks Cartridge Reloading,
488B Cherry St.,
San Bruno, Calif.

Hanson's Custom Loading,
Box 143,
Bonner Springs, Kan.

J. W. McPhillips,
285 Mastick,
San Bruno, Calif.

Inletted Gunstocks:

Banks-Maxwell,
Box 3301A,
Fort Worth 5, Tex.

E. C. Bishop & Son, Inc.,
Warsaw, Mo.

Central Pattern Works, Inc.,
1338 Clark St.,
Racine, Wis.

Flaig's,
Millvale, Pa.

Robert K. Haelig,
(Shotgun stocks)
Bound Brook, N. J.

Herter's, Inc.,
Waseca, Minn.

Leather Goods—Gun Cases, Etc.:

The Boyt Co.,
Des Moines, Iowa.

J. M. Bucheimer Co.,
Towson 4, Md.

Can-Pro Corp.,
Fond du Lac, Wis.

Bradley E. Grimes Co.,
West Collingswood Heights, N. J.

The Herman H. Heiser Co.,
Denver 4, Colo.

The Hood Co.,
(Rust-Pruf Pouches)
11048 S. Van Ness,
Los Angeles 47, Calif.

George L. Jensen,
(Cartridge cases)
4100 W. 49th Ave.,
Denver 12, Colo.

S. D. Myres Saddle Co.,
El Paso, Tex.

Nichols Sporting Goods,
Yarmouth, Me.

Sterns Manufacturing Co.,
St. Cloud, Minn.

Tandy Leather Co.,
P.O. Box 791-AA,
Fort Worth 1, Tex.

Linseed and Sperm Oils:

McKesson Hall-Van Gorder Co.,
1382 W. 9th St.,
Cleveland 13, Ohio.

Muth Brothers,
Baltimore, Md.

Metalworking Tools:

Pratt & Whitney Co.,
Hartford, Conn.

Sheldon Machine Co., Inc.,
4243 N. Knox Ave.,
Chicago 41, Ill.

South Bend Lathe,
South Bend, Ind.

Recoil Pads:

Dayton-Traister Co.,
34 S. E. 66th Ave.,
Portland 16, Ore.

Hawkins Recoil Pad Co.,
Sioux City, Iowa.

Jostem Manufacturing Co.,
5252 Broadway,
Chicago 40, Ill.

Mershon Co., Inc.
Glendale, Calif.

Public Sports Shop,
11 S. 16th St.,
Philadelphia 2, Pa.

A. G. Parker & Co., Ltd.,
Birmingham, England.

Reloading Tools:

Belding & Mull,
9 N. Front St.,
Philipsburg, Pa.

Cramer Bullet Mould Co.,
11625 Vanowen St.,
North Hollywood, Calif.

Easton Engineering Co.,
1554 S. 2nd, West,
Salt Lake City 10, Utah.

Foster Brothers,
86 E. Lanark Ave.,
Lanark, Ill.

Hollywood Gun Shop,
6116 Hollywood Blvd.,
Hollywood 28, Calif.

J. S. Hulme,
140 Miriam St.,
Daly City 25, Calif.

Johnson's Rifle Clinic,
202 N. Chaparral St.,
Corpus Christi, Tex.

The Lyman Gun Sight Corp.,
Middlefield, Conn.

Pacific Gun Sight Co.,
2901 El Camino Real,
Palo Alto, Calif.

G. T. Smily Co.,
Clipper Gap, Calif.

Reloading Supplies:

Alcan Co., Inc.,
Alton, Ill.

Aurand's,
229-31 E. 3rd St.,
Lewiston, Pa.

Carbide Die & Manufacturing Co.,
600 E. Evergreen St.,
Monrovia, Calif.

The Gun Shop,
3718 Broadway,
Chicago 13, Ill.

B. E. Hodgdon,
Merriam, Kan.

Kerr's,
9582 Wilshire Blvd.,
Beverly Hills, Calif.

Lindahl Gun Co.,
Central City, Neb.

Precision Tool & Gun Co.,
303 E. Upland Road,
Ithaca, N. Y.

Rochester Lead Works,
Rochester 8, N. Y.

Robert S. Thomas,
8402 Fenton St.,
Silver Springs, Md.

Warner & Sons,
(Gas Checks)
2510 Pleasant Valley,
Altoona, Pa.

Revolver and Automatic Finger Grips:

Harvey E. Henshaw,
818-20 Oakwood St.,
Pittsburgh 21, Pa.

Frank Mittermeir,
3577 E. Tremont Ave.,
New York 61, N. Y.

Pachmayr Gun Works,
1220 S. Grand Ave.,
Los Angeles 15, Calif.

Bob Winger,
717 Broad St.,
Montoursville, Pa.

Revolvers and Automatic Pistols:

Colt's Patent Fire Arms Manufacturing Co.,
Hartford 15, Conn.

Harrington & Richardson Arms Co.,
Worcester, Mass.

High Standard Manufacturing Corp.,
Dixwell Ave.,
Hamden, Conn.

Iver Johnson's Arms Co.,
Fitchburg, Mass.

Smith & Wesson,
Springfield, Mass.

Strum, Ruger & Co., Inc.,
Southport, Conn.

Webley & Scott, Ltd.,
Birmingham, England.

Rifle and Shotgun Manufacturers:

Browning Arms Co.,
St. Louis 3, Mo.

The Hunter Arms Co.,
(L. C. Smith shotguns)
Fulton, N. Y.

Ithaca Gun Co., Inc.,
Ithaca, N. Y.

Johnson Automatics Arms Co.,
P.O. Box 1512,
Providence 1, R. I.

Marlin Firearms Co.,
New Haven, Conn.

O. F. Mossberg & Sons, Inc.,
12511 St. John St.,
New Haven 5, Conn.

Parker Brothers,
Meriden, Conn.

Savage Arms Corp.,
Utica, N. Y.

J. Stevens Arms Co.,
Chicopee Falls, Mass.

Winchester Repeating Arms Co.,
(Division of Olin Industries, Inc.)
New Haven 4, Conn.

Francotte Arms Co.,
Liége, Belgium.

Birmingham Small Arms Co., Ltd.,
Birmingham, England.

Boss & Co.,
41 Albemarle St.,
London, W. 1, England.

Robert Churchill,
Orange St., Leicester Square,
London, England.

Cogswell & Harrison, Ltd.,
168 Piccadilly,
London, England.

Stephen Grant,
7 Bury St., St. James,
London, S.W. 1, England.

W. W. Greener,
St. Mary's Row,
Birmingham, England.

Holland & Holland, Ltd.,
98 New Bond St.,
London, W. 1, England.

W. J. Jeffry & Co., Ltd.,
26 Bury St., St. James,
London, S.W. 1, England.

Thomas Powell,
Birmingham, England.

John Rigby & Co.,
43 Sackville St.,
London, S.W. 1, England.

Vickers Limited,
Crayford, Kent, England.

Webley & Scott, Ltd.,
Birmingham, England.

Westley Richards & Co., Ltd.,
(Works at Birmingham)
23 Conduit St.,
London, W. 1, England.

James Woodward Sons,
64 St. James's St., Pall Mall,
London, S.W. 1, England.

Gustav Genschow & Co., Ltd.,
Sudseehaus,
Hamburg 1, Germany.

Heinrich Krieghoff,
Suhl, Germany.

J. P. Sauer & Co.,
Suhl, Germany.

Husqvara Vapenfabriks Aktiebolg,
Husqvara, Sweden.

Riflemen's Supplies:

Brownell Industries, Inc.
Montezuma, Iowa.

Detroit Bullet Trap Co.,
8600 Lyndon,
Detroit 21, Mich.

Al Freeland,
3737 Fourteenth Ave.,
Rock Island, Ill.

Gopher Shooter's Supply,
Faribault, Minn.

G.R.C. Manufacturing Co.,
Olean, N. Y.

P. J. O'Hare,
552 Irvington Ave.,
Maplewood, N. J.

Palley Supply Co.,
6321 Fernando Road,
Glendale 1, Calif.

Thurman Randle & Co.,
208 N. Akard St.,
Dallas 1, Tex.

10-X Manufacturing Co.,
405 E. 2nd St.,
Des Moines 9, Iowa.

Norm Thompson,
5095 S. W. Barnes Road,
Portland 1, Ore.

Rifle Powders:

E. I. Du Pont De Nemours & Co.,
Wilmington, Del.

Hercules Powder Co.,
Wilmington, Del.

Kings Powder Co.,
(Black powders)
Kings Mills, Ohio.

Olin Industries, Inc.
East Alton, Ill.

Sporting Arms & Ammunition Institute,
343 Lexington Ave.,
New York 16, N. Y.

Rifle Telescopes and Mounts:

Bausch & Lomb Optical Co.,
643 Lomb Park,
Rochester 2, N. Y.

J. W. Fecker, Inc.,
2016 Perrysville Ave.,
Pittsburgh 14, Pa.

Griffin & Howe, Inc.,
202 E. 44th St.,
New York 17, N. Y.

T. K. Lee,
(Lee Dot Reticule)
P.O. Box 2123,
Birmingham 1, Ala.

E. W. Lehman,
P.O. Box 326, Hillcrest Station,
San Diego 3, Calif.

Leupold & Stevens Instruments, Inc.,
Portland 13, Ore.

R. A. Litchert,
Winchester, Ind.

The Lyman Gunsight Corp.,
Middlefield, Conn.

The Montana Mount,
Box 311,
Livingston, Mont.

Pachmayr Gun Works,
1220 S. Grand Ave.,
Los Angeles 15, Calif.

Stith,
500 Transit Tower,
San Antonio 5, Tex.

Tinsley Laboratories,
2524 Grove St.,
Berkeley 4, Calif.

John Unertl Optical Co.,
355-55 East St.,
Pittsburgh 14, Pa.

W. R. Weaver Co.,
El Pasco, Tex.

Carl Zeiss, Ind.,
(Hensoldt Hunting Scopes)
485 Fifth Ave.,
New York 17, N. Y.

Shooting Spectacles:

Bausch & Lomb Optical Co.,
643 Lomb Park,
Rochester 2, N. Y.

Belz, Opticians,
2 E. 44th St.,
New York 17, N. Y.

Sights:

King Gun Sight Co.,
667 Howard St.,
San Francisco 5, Calif.

The Lyman Gunsight Corp.,
Middlefield, Conn.

Marble Arms & Manufacturing Co.,
502 Delta Ave.,
Gladstone, Mich.

Merit Gunsight Co.,
6144 Monadnock Way,
Oakland 5, Calif.

Micro Sight Co.,
5813 Mission St.,
San Francisco 25, Calif.

Pacific Gun Sight Co.,
2901 El Camino Real,
Palo Alto, Calif.

Redfield Gunsight Co.,
3313 Gilpin St.,
Denver 5, Colo.

Star Gunsight Co.,
Box 112,
Stroudsburg, Pa.

Williams Gun Sight Co.,
7389 Lapeer Road,
Davison, Mich.

Special Bullets:

J. W. Hornady,
216 W. 4th St.,
Grand Island, Neb.

M.G.S. Bullet Co.,
Hollydale, Calif.

Sierra Manufacturing Co.,
600 West Whittier Blvd.,
Whittier, Calif.

Speer Products Co.,
Lewiston, Idaho.

Western Alloy Co.,
P.O. Box 643,
North Hollywood, Calif.

Western Tool & Copper Co.,
P.O. Box 856,
Oakland, Calif.

Sporting Goods:

Abercrombie & Fitch Co.,
342 Madison Ave.,
New York 17, N. Y.

Alaska Sleeping Bag Co.,
309 S.W. 3rd Ave.,
Portland 4, Ore.

L. L. Bean,
302 Main St.,
Freeport, Me.

Continental Arms Corp.,
697 Fifth Ave.,
New York 22, N. Y.

Fiala Outfits,
47 Warren St.,
New York 7, N. Y.

Firearms International Corp.,
Washington 20, D. C.

J. L. Galef & Son, Inc.,
85 Chambers St.,
New York 7, N. Y.

Hudson Sporting Goods Co.,
52 Warren St.,
New York 7, N. Y.

Klein's,
227 West Washington St.,
Chicago 6, Ill.

National Camera Exchange,
86 S. 6th St.,
Minneapolis 2, Minn.

Parker-Whelen Co., Inc.,
827 Fourteenth St., N.W.,
Washington 5, D. C.

Roberts Industries, Inc.,
4200 N. Main St.,
Branford, Conn.

Stoeger Arms Corp.,
45-47 Pearson St.,
Long Island City 1, N. Y.

Von Lengerke & Antoine,
9 N. Wabash Ave.,
Chicago 2, Ill.

Western Arms Corp.,
417 E. Pico Blvd.,
Los Angeles 15, Calif.

Spotting Telescopes:

Bausch & Lomb Optical Co.,
630 Lomb Park,
Rochester 2, N. Y.

Chester Brandon,
Box 126,
Montrose, Calif.

J. W. Fecker, Inc.,
2016 Perrysville Ave.,
Pittsburgh 14, Pa.

Tinsley Laboratories,
2524 Grove St.,
Berkeley 4, Calif.

John Unertl Optical Co.,
3551-5 East St.,
Pittsburgh 14, Pa.

Steel Tubing:

Elwood Ivins Tube Works,
Oak Lane,
Philadelphia 26, Pa.

Globe Stainless Tube Co.,
Milwaukee, Wis.

Stock Finishing Materials:

A. B. Harris,
Box 505,
Gary, Ind.

Mashburn Arms Co.,
112 West Grand,
Oklahoma City 2, Okla.

C. R. Pedersen & Co.,
Ludington, Mich.

Targets:

National Rifle Association,
1600 Rhode Island Ave., N.W.,
Washington 6, D. C.

National Target Co.,
1255 25th St., N.W.,
Washington 6, D. C.

New Trenton Targets,
P.O. Box 51,
Cincinnati 5, Ohio.

Threading Dies and Taps:

Driver Equipment Co.,
1152 Valencia St.,
San Francisco 10, Calif.

Frank S. Fickett,
232 Fowler Ave.,
San Francisco 16, Calif.

Greenfield Tap & Die Co.,
Greenfield, Mass.

Pratt & Whitney Co.,
Hartford, Conn.

Trigger Attachments:

M. H. Canjar,
4476 Pennsylvania St.,
Denver 16, Colo.

Hunting's Gun Shop,
Rt. 4, Box 486A,
New Brunswick, N. J.

Paul Jaeger,
Jenkintown, Pa.

Mashburn Arms Co.,
112 West Grand,
Oklahoma City 2, Okla.

Viggo Miller,
4340 Charles St.,
Omaha 3, Neb.

Trophies Mounted:

Joseph Bruchac,
Greenfield Center 2, N. Y.

Ventilated Ribs:

Simmons,
504 E. 18th St.,
Kansas City 6, Mo.

Woodworking Tools:

Power Tools, Inc.,
1327 Yates Ave.,
Beloit, Wis.

Rockwell Manufacturing Co.,
(Delta Power Tools)
833 E. Vienna Ave.,
Milwaukee 1, Wis.

Books Recommended for the Student:

American Machinist Hand-Book. McGraw-Hill Publishing Co., New York, N. Y.

Pistols and Revolvers. Hatcher.

Machinery Hand-Book. The Industrial Press, New York, N. Y.

Heat Treatment, Uses and Properties of Steel. Knowlton.

Steel and its Heat Treatment. Bullens.

Gas Welding and Cutting. American Welding Society.

Text-book of Advanced Machine Work. Smith.

Dies and Die Making. International Textbook Co.

Machine Tools and their Operation. Colvin & Stanley.

Military and Sporting Rifle Shooting. Capt. E. C. Crossman.

American Rifleman. Published by the National Rifle Association of America, 1600 Rhode Island Ave., N.W., Washington 6, D. C.

The Technical Division of any Public Library is a source where information can be had on any subject relating to the mechanical crafts.